AIR CONDITIONING CONTROL ASSEMBLY (Manual A/C)

AC2CK–01

ON–VEHICLE INSPECTION

INSPECT HEATER CONTROL DIALS OPERATION

Turn the control lever and dials left and right then check that click sound can be heard and recoil is felt.
If click sound can not be heard or recoil is felt, adjust the control cable or check control cable and heater control assembly.

AC2CL–01

COMPONENTS

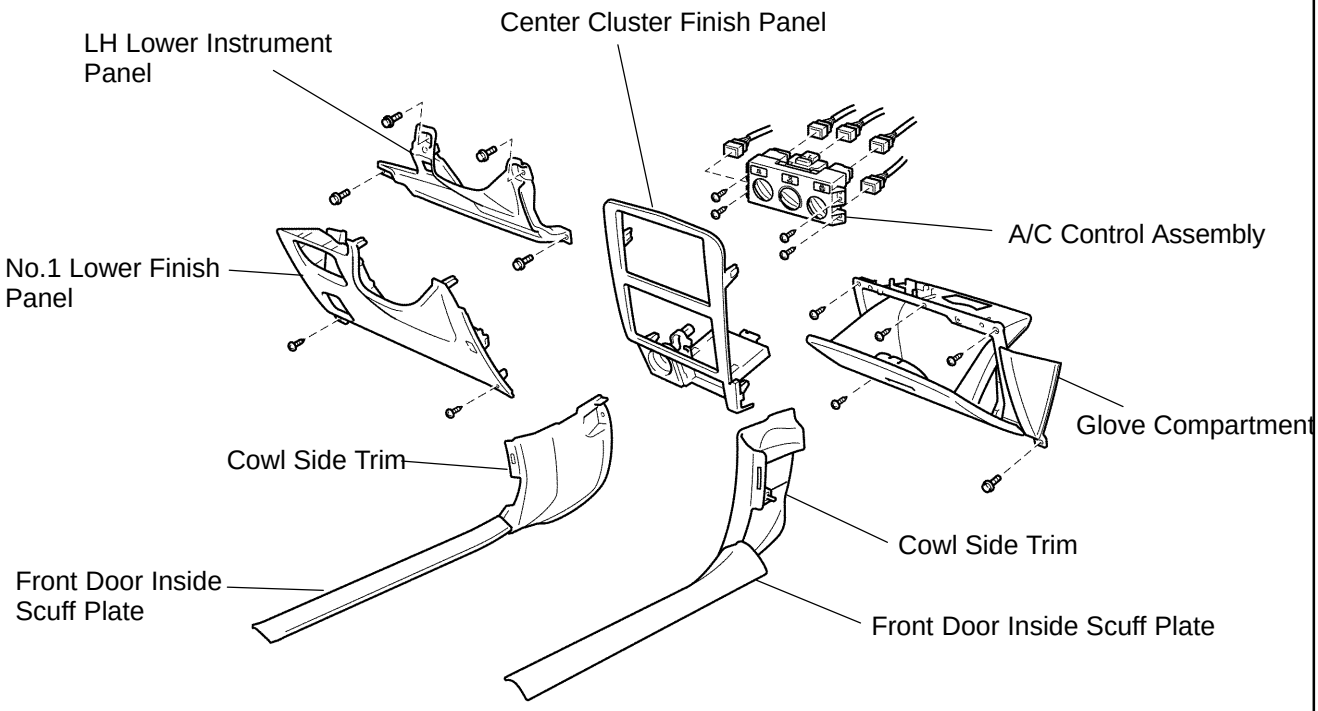

P

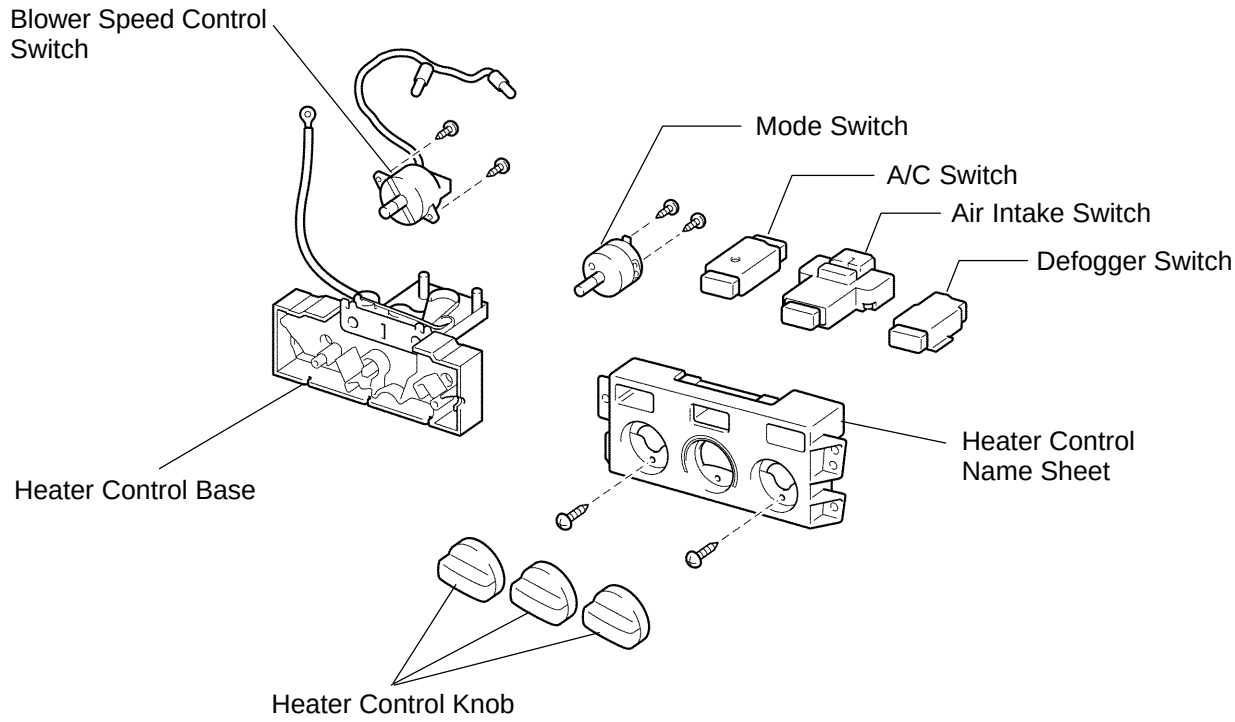

P

I12253
I12254

I12260

AC2CM–01

REMOVAL

1. REMOVE COWL SIDE TRIM LH AND RH

2. REMOVE FRONT DOOR INSIDE SCUFF PLATE LH AND RH

3. REMOVE NO. 2 LOWER COVER

4. REMOVE GLOVE COMPARTMENT

5. REMOVE NO. 1 LOWER INSTRUMENT PANEL

6. REMOVE LH LOWER INSTRUMENT PANEL

7. REMOVE CENTER CLUSTER FINISH PANEL

8. DISCONNECT AIR MIX DAMPER CONTROL CABLE

NOTICE:

When the air mix damper control cable is disconnected, should not bend the cable.

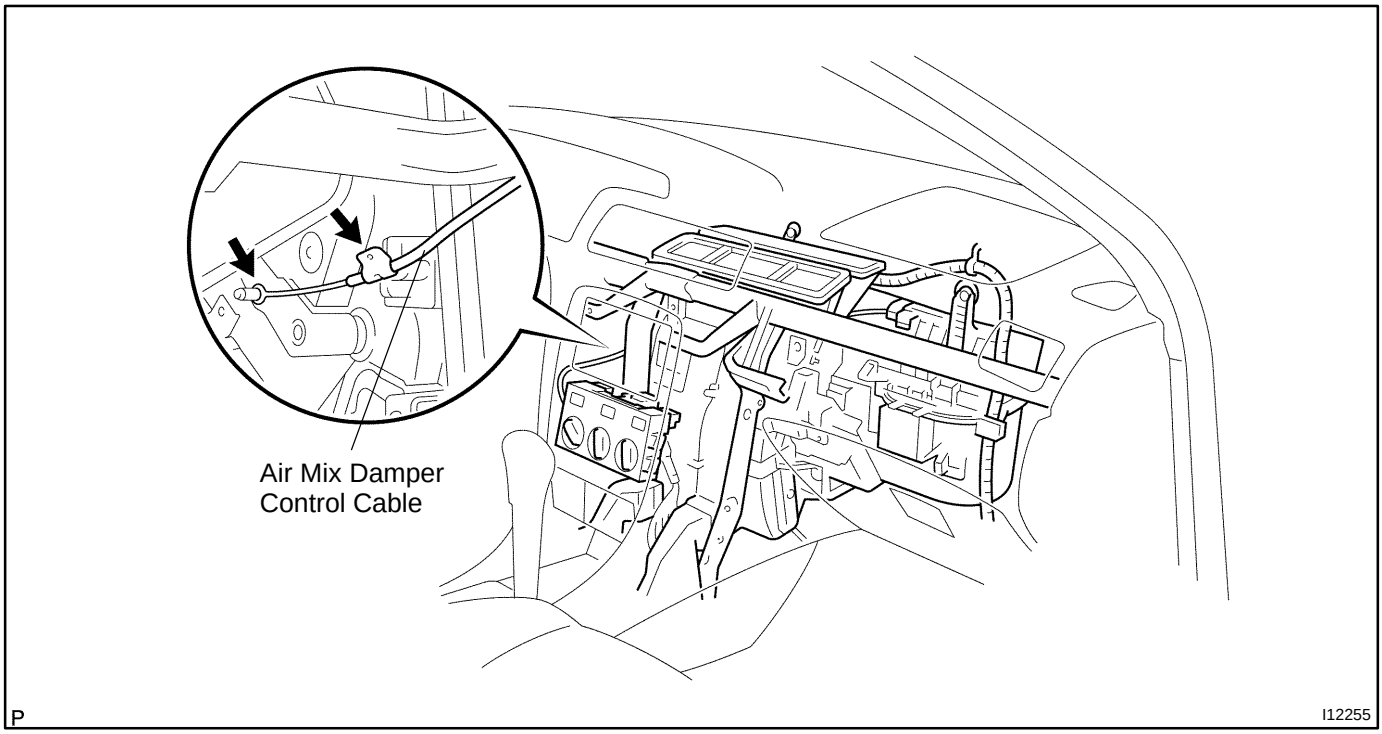

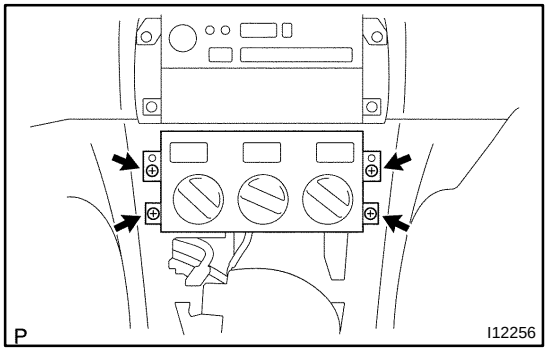

9. REMOVE A/C CONTROL ASSEMBLY

Remove the 4 screws and pull out the A/C control assembly, then disconnect the connector.

AC2CN–01

DISASSEMBLY

1. REMOVE A/C SWITCH, AIR INTAKE SWITCH AND DEFOGGER SWITCH

Using a screwdriver, release the claw and pull out the switch backward.

HINT:

Tape the screwdriver tip before use.

2. REMOVE HEATER CONTROL KNOBS

3. REMOVE HEATER CONTROL CABLE

4. REMOVE BLOWER SPEED CONTROL SWITCH

Remove the 2 screws and pull out the switch.

5. REMOVE MODE SWITCH

Remove the 2 screws and pull out the switch.

6. REMOVE HEATER CONTROL NAME SHEET

(a) Remove the 2 screws.

(b) Using a screwdriver, release the 4 claws and heater control name sheet.

HINT:

Tape the screwdriver tip before use.

AC2CO–01

INSPECTION

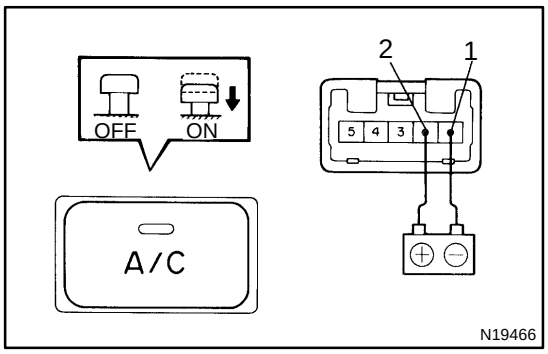

1. INSPECT A/C INDICATOR OPERATION

(a) Connect the positive (+) lead from the battery to terminal 2 and the negative (–) lead to terminal 1.

(b) Push the A/C button in and then check that the indicator lights up.

If operation is not as specified, replace the switch.

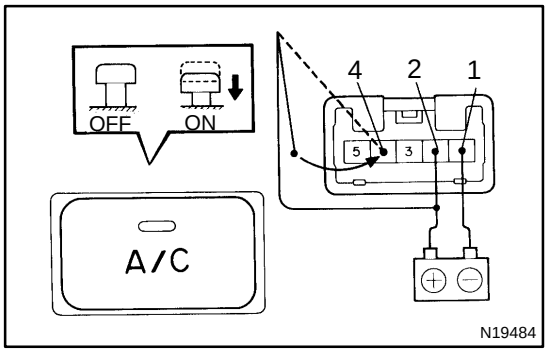

2. INSPECT DIMMING OPERATION

(a) Connect the positive (+) lead from the battery to terminal 2 and the negative (–) lead to terminal 1 while press the switch.

(b) Connect the positive (+) lead from battery to terminal 4 and then check that the indicator dims.

If operation is not as specified, replace the switch.

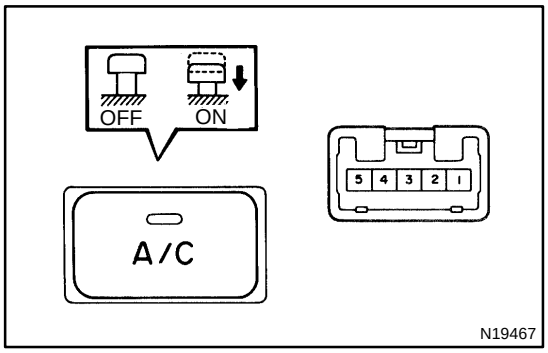

3. INSPECT A/C SWITCH CONTINUITY

Condition/ Circuit	Tester connection	Specified condition
OFF	–	No continuity
ON	2 – 5	Continuity
Illumination circuit	3 – 4	Continuity

Switch continuity:

If continuity is not as specified, replace the switch.

Illumination circuit:

If continuity is not as specified, replace the bulb.

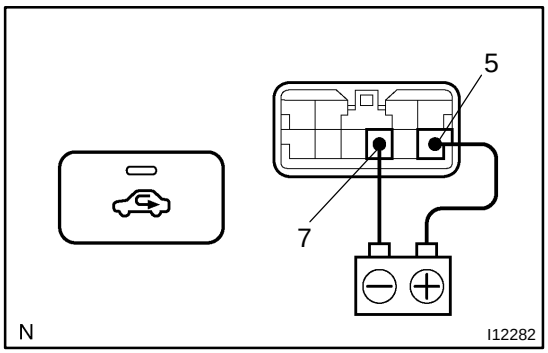

4. INSPECT REC INDICATOR OPERATION

(a) Connect the positive (+) lead from the battery to terminal 5 and the negative (–) lead to terminal 7.

(b) Push the Air Intake button and the check that the indicator lights up.

If operation is not as specified, replace the switch.

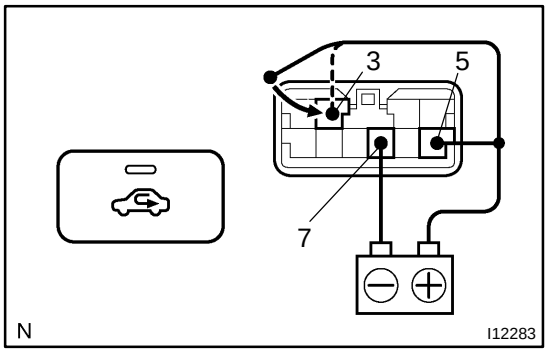

5. INSPECT DIMMING OPERATION

(a) Connect the positive (+) lead from the battery to terminal 5 and the negative (–) lead to terminal 7.

(b) Push the Air Intake button, then the indicator lights up.

(c) Connect the positive (+) lead from the battery to terminal 3 and then check that the indicator dims.

If operation is not as specified, replace the switch.

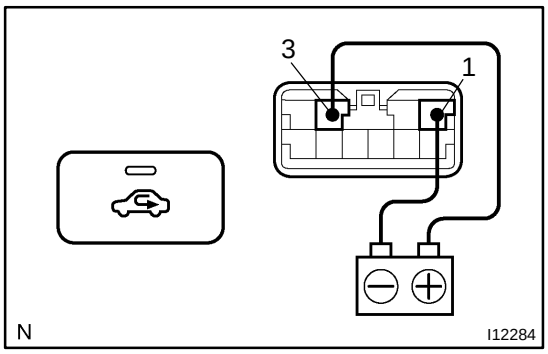

6. INSPECT REC INDICATOR OPERATION

Connect the positive (+) lead from the battery to terminal 3 and the negative (–) lead to terminal 1, then check that illumination light up.

If operation is not as specified, replace the switch.

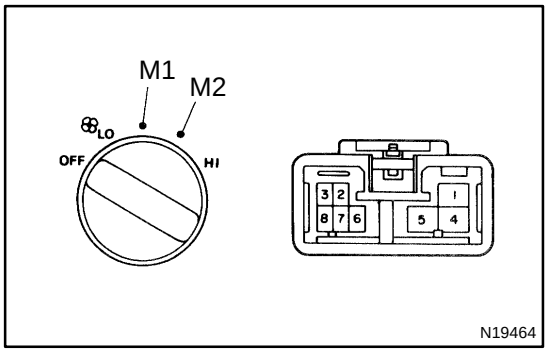

7. INSPECT BLOWER SPEED CONTROL SWITCH CONTINUITY

Position/ Circuit	Tester connection	Specified condition
OFF	–	No continuity
LO	1 – 3	Continuity
M1	1 – 3 – 4	Continuity
M2	1 – 3 – 8	Continuity
HI	1 – 3 – 5	Continuity
Illumination circuit	6 – 7	Continuity

If continuity is not as specified, replace the switch.

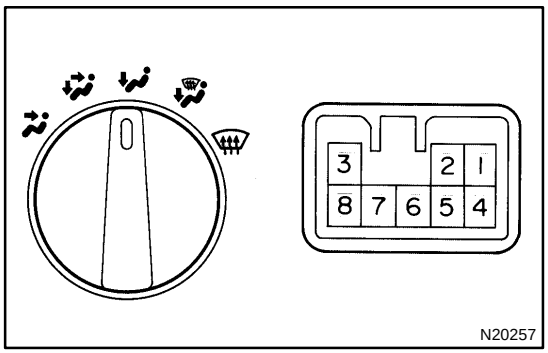

8. INSPECT MODE SWITCH CONTINUITY

Switch position	Tester connection	Specified condition
FACE	1 – 6	Continuity
B/L	1 – 5	Continuity
FOOT	1 – 4	Continuity
FOOT/DEF.	1 – 3	Continuity
DEF.	1 – 2 7 – 8	Continuity

If continuity is not as specified, replace the switch.

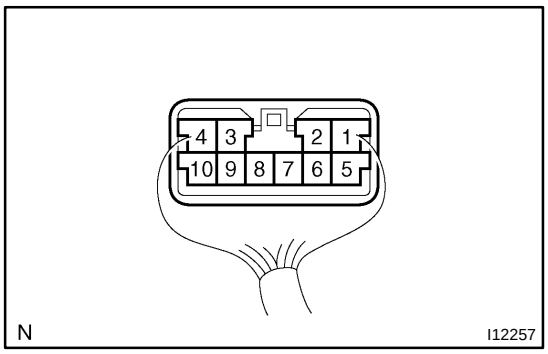

9. INSPECT AIR INTAKE SWITCH CIRCUIT

(a) Connect the connectors to heater control assembly.

(b) Inspect wire harness side connector from the back side, as shown in the chart.

Tester connection	Condition	Specified condition
7 – Ground	Constant	Continuity
8 – Ground	Constant	Continuity
3 – Ground	IG ON. Light control switch: TAIL	Battery positive voltage
	IG ON. Light control switch: OFF	No voltage
4 – Ground	Constant	Battery positive voltage
5 – Ground	Ignition switch: ON	Battery positive voltage
	Ignition switch: LOCK or ACC.	No voltage
2 – Ground	IG ON. Mode selector: DEF.	Below 0.3 V
	IG ON. Mode selector: Except DEF.	No voltage
6 – Ground	IG ON. Mode selector: F/D	Below 0.3 V
	IG ON. Mode selector: Except F/D	No voltage
9 – Ground	IG ON. Air intake switch: REC	Below 2.0 V
	IG ON. Air intake switch: FRS	No voltage
10 – Ground	IG ON. Air intake switch: FRS	Below 2.0 V
	IG ON. Air intake switch: REC	No voltage

If circuit is as specified, try replacing the air intake switch with a new one. If the circuit is not as specified, inspect the circuits connected to other parts.

10. INSPECT REAR DEFOGGER SWITCH OPERATION (See page BE–57)

AC2CQ–01

INSTALLATION

Installation is in the reverse order of removal (See page AC–95).

1. AFTER INSTALLATION INSPECT A/C CONTROL LEVER AND DIAL OPERATION

Move the control dial left and right and check fro stiffness and binding through the full range of the dial.

If there is stiffness or binding, proceed next step.

2. ADJUST A/C CONTROL CABLE

(a) Set the temperature control dial in ”MAX. COOL” position.

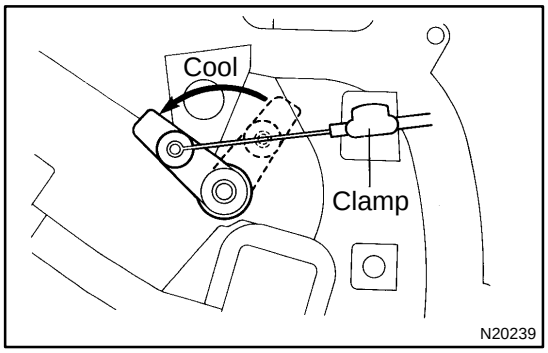

(b) Adjust air mix control cable.

Set the cable connector to air mix link pin on left side of A/C unit and clamp the cable outer on condition.

NOTICE:

- **Don’t bend the cable on setting the cable.**
- **Don’t move the air mix nob before finishing on clamping the cable outer.**

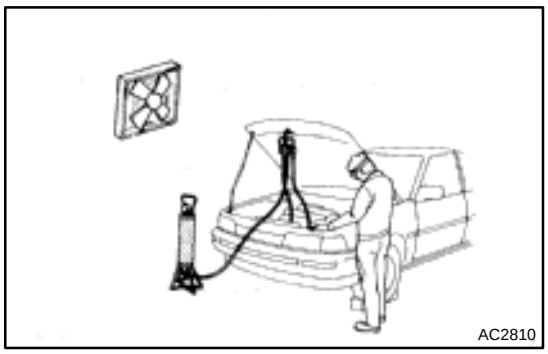
AC2810

AIR CONDITIONING SYSTEM

AC0LG–02

PRECAUTION

1. DO NOT HANDLE REFRIGERANT IN AN ENCLOSED AREA OR WEAR EYE PROTECTION

2. ALWAYS WEAR EYE PROTECTION

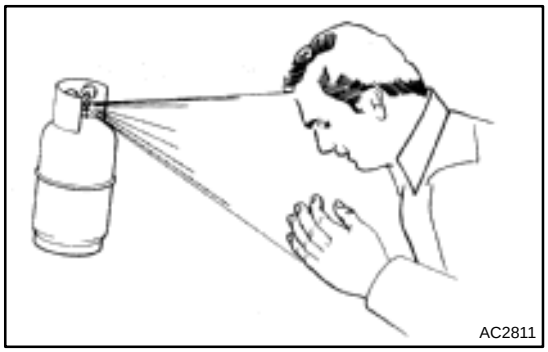
AC2811

3. BE CAREFUL NOT TO GET LIQUID REFRIGERANT IN YOUR EYES OR ON YOUR SKIN

If liquid refrigerant gets in your eyes or on your skin.

(a) Wash the area with lots of cool water.

CAUTION:

Do not rub your eyes or skin.

(b) Apply clean petroleum jelly to the skin.

(c) Go immediately to a physician or hospital for professional treatment.

4. NEVER HEAT CONTAINER OR EXPOSE IT TO NAKED FLAME

5. BE CAREFUL NOT TO DROP CONTAINER AND NOT TO APPLY PHYSICAL SHOCKS TO IT

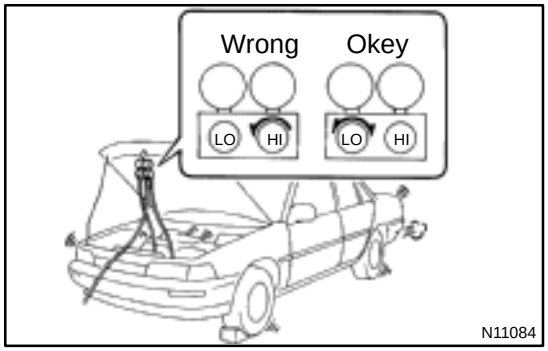

N11084

6. DO NOT OPERATE COMPRESSOR WITHOUT ENOUGH REFRIGERANT IN REFRIGERATION SYSTEM

If there is not enough refrigerant in the refrigerant system oil lubrication will be insufficient and compressor burnout may occur, so that care to avoid this, necessary care should be taken.

7. DO NOT OPEN PRESSURE MANIFOLD VALVE WHILE COMPRESSOR IS OPERATE

If the high pressure valve is opened, refrigerant flows in the reverse direction and could cause the charging cylinder to rupture, so open and close the only low pressure valve.

8. BE CAREFUL NOT TO OVERCHARGE SYSTEM WITH REFRIGERANT

If refrigerant is overcharged, it causes problems such as insufficient cooling, poor fuel economy, engine overheating etc.

9. SUPPLEMENTAL RESTRAINT SYSTEM (SRS)

The CAMRY is equipped with an SRS (Supplemental Restraint System) such as the driver airbag and passenger airbag. Failure to carry out service operations the correct sequence could cause the SRS to unexpectedly deployed during servicing, possible the SRS may fail to operate when required. Before servicing (including removal or installation of parts, inspection or replacement), be sure to read the following item carefully, then follow the correct procedure described in the repair manual.

AC0LI–02

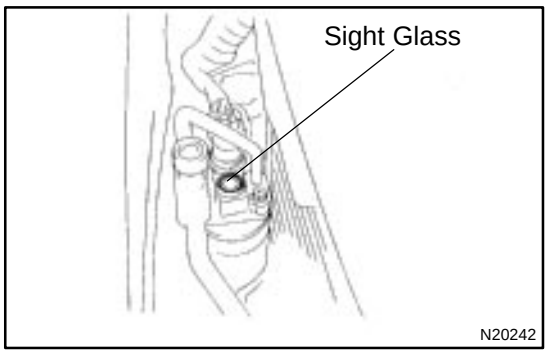

ON–VEHICLE INSPECTION

1. INSPECT REFRIGERANT VOLUME

Observe the sight glass on the liquid tube.

Test conditions:

- Running engine at 1,500 rpm
- Blower speed control switch at ”HI” position
- A/C switch ON
- Temperature control dial at ”COOL” position
- Fully open the doors

Item	Symptom	Amount of refrigerant	Remedy
1	Bubbles present in sight glass	Insufficient*	(1) Check for gas leakage with gas leak detector and repair if necessary (2) Add refrigerant until bubbles disappear
2	No bubbles present in sight glass	None, sufficient or too much	Refer item 3 and 4
3	No temperature difference between compressor inlet and outlet	Empty or nearly empty	(1) Check for gas leakage with gas leak detector and repair if necessary (2) Add refrigerant until bubbles disappear
4	Temperature between compressor inlet and outlet is noticeably different	Correct or too much	Refer to items 5 and 6
5	Immediately after air conditioning is turned off, refrigerant in sight glass stays clear	Too much	(1) Discharge refrigerant (2) Evacuate air and charge proper amount or purified refrigerant
6	When air conditioning is turned off, refrigerant foams and then stays clear	Correct	–

*: Bubbles in the sight glass with ambient temperatures higher than usual can be considered normal if cooling is sufficient.

2. INSPECT REFRIGERANT PRESSURE WITH MANIFOLD GAUGE SET

This is a method in which the trouble is located by using a manifold gauge set. Read the manifold gauge pressure when the these conditions are established.

Test conditions:

- Temperature at the air inlet with the switch set at RECIRC is 30 – 35 ˚C (86 – 95 ˚F)
- Engine running at 1500 rpm
- Blower speed control switch at ”HI” position
- Temperature control dial on ”COOL” position

HINT:

It should be noted that the gauge indications may vary slightly due to ambient temperature conditions.

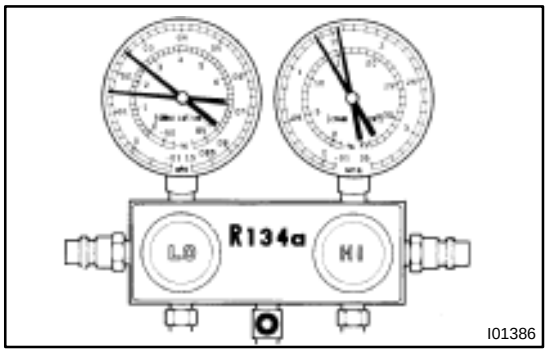

(1) Normally functioning refrigeration system.

Gauge reading:

Low pressure side:

0.15 – 0.25 MPa (1.5 – 2.5 kgf/cm^2)

High pressure side:

1.37 – 1.57 MPa (14 – 16 kgf/cm$^{2)}$

(2) Moisture present in refrigeration system.

Condition: Periodically cools and then fails to cool

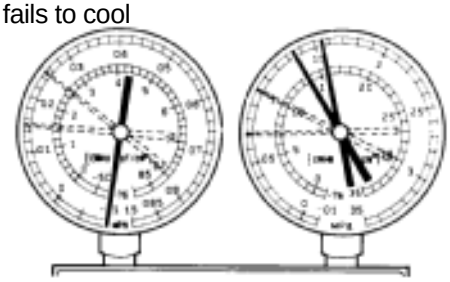

I01387

Symptom seen in refrigeration system	Probable cause	Diagnosis	Remedy
During operation, pressure on low pressure side sometimes become a vacuum and sometime normal	Moisture entered in refrigeration system freezes at expansion valve orifice and temporarily stops cycle, but normal state is restored after a time when the ice melts	◆Drier oversaturated state ◆Moisture in refrigeration system freezes at expansion valve orifice and blocks circulation of refrigerant	(1) Replace receiver (2) Remove moisture in cycle through repeatedly evacuating air (3) Charge proper amount of new refrigerant

(3) Insufficient cooling

Condition: Insufficient cooling

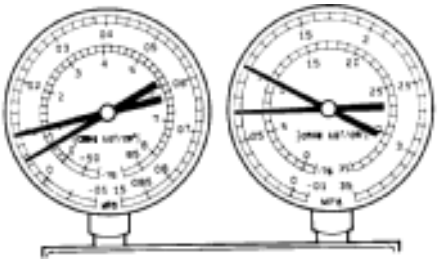

I01388

Symptom seen in refrigeration system	Probable cause	Diagnosis	Remedy
◆Pressure low on both low and high pressure sides ◆Bubbles seen in sight glass continuously ◆Insufficient cooling performance	Gas leakage at some place in refrigeration system	◆Insufficient refrigerant in system ◆Refrigerant leaking	(1) Check for gas leakage with gas leak detector and repair if necessary (2) Charge proper amount of refrigerant (3) If indicated pressure value is near 0 when connected to gauge, create the vacuum after inspecting and repairing the location of the leak

(4) Poor circulation of refrigerant

Condition: Insufficient cooling

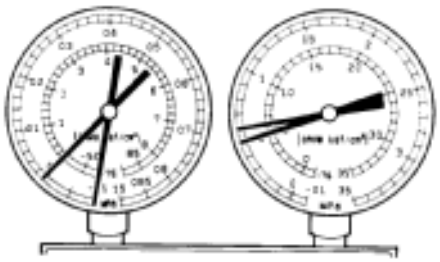

I01389

Symptom seen in refrigeration system	Probable cause	Diagnosis	Remedy
◆Pressure low in both low and high pressure sides ◆Frost on tube from receiver to unit	Refrigerant flow obstructed by dirt in receiver	Receiver clogged	Replace receiver

(5) Refrigerant does not circulate

Condition: Does not cool (Cools from time to time in some cases)

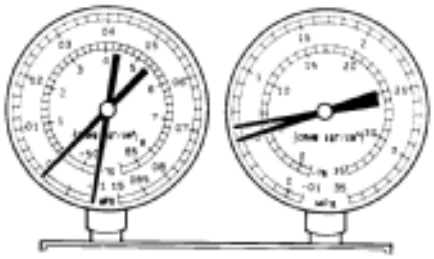

I01449

Symptom seen in refrigeration system	Probable cause	Diagnosis	Remedy
◆Vacuum indicated on low pressure side, very low pressure indicated on high pressure side ◆Frost or dew seen on piping before and after receiver/ drier or expansion valve	◆Refrigerant flow obstructed by moisture or dirt in refrigeration system ◆Refrigerant flow obstructed by gas leakage from expansion valve	Refrigerant does not circulate	(1) Check expansion valve (2) Clean out dirt in expansion valve by blowing with air (3) Replace receiver (4) Evacuate air and charge new refrigerant to proper amount (5) For gas leakage from expansion valve, replace expansion valve

(6) Refrigerant overcharged or insufficient cooling of condenser

Condition: Insufficient cooling

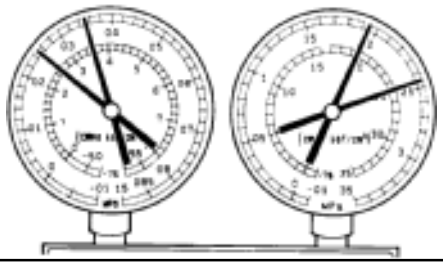

I01390

Symptom seen in refrigeration system	Probable cause	Diagnosis	Remedy
◆Pressure too high on both low and high pressure sides ◆No air bubbles seen through the sight glass even when the engine rpm is lowered	◆Unable to develop sufficient performance due to excessive refrigeration system ◆Insufficient cooling of condenser	◆Excessive refrigerant in cycle → refrigerant over charged ◆Condenser cooling → condenser fins clogged of condenser fan faulty	(1) Clean condenser (2) Check condenser fan motor operation (3) If (1) and (2) are in normal state, check amount of refrigerant Charge proper amount of refrigerant

(7) Air present in refrigeration system

Condition: Insufficient cooling

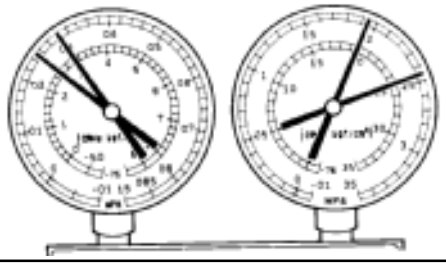

NOTE : These gauge indications are shown when the refrigeration system has been opened and the refrigerant charged without vacuum purging.

I01392

Symptom seen in refrigeration system	Probable cause	Diagnosis	Remedy
◆Pressure too high on both low and high pressure sides ◆The low pressure piping hot to touch ◆Bubbles seen in sight glass	Air entered in refrigeration system	◆Air present in refrigeration system ◆Insufficient vacuum purging	(1) Check compressor oil to see if it is dirty or insufficient (2) Evacuate air and charge new refrigerant

(8) Expansion valve improperly

Condition: Insufficient cooling

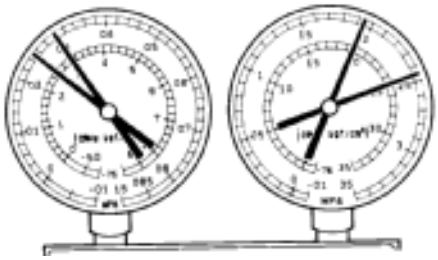

I01450

Symptom seen in refrigeration system	Probable cause	Diagnosis	Remedy
◆Pressure too high on both low and high pressure sides ◆Frost or large amount of dew on piping on low pressure side	Trouble in expansion valve	◆Excessive refrigerant in low pressure piping ◆Expansion valve opened too wide	Check expansion valve Replace if defective

(9) Defective compression compressor

Condition : Does not cool

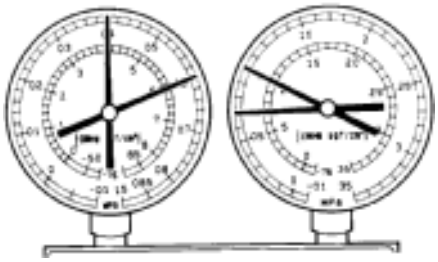

I01393

Symptom seen in refrigeration system	Probable cause	Diagnosis	Remedy
◆Pressure too high on low and high pressure sides ◆Pressure too low on high pressure side	Internal leak in compressor	◆Compression defective ◆Valve leaking or broken sliding parts	Repair or replace compressor

3. INSPECT IDLE–UP SPEED

(a) Warm up engine.

(b) Inspect idle–up speed when the these conditions are established.

- Warm up engine
- Blower speed control switch at ”HI” position
- A/C switch ON
- Temperature control dial at ”COOL” position

Magnetic clutch condition	Idle–up speed
Magnetic clutch not engaged	700 ± 50 rpm
Magnetic clutch engaged	700 ± 50 rpm

If idle speed is not as specified, check ISC valve and air intake system.

4. INSPECT FOR LEAKAGE OF REFRIGERANT

(a) Perform in these conditions:

- Stop engine.
- Secure good ventilation (If not the gas leak detector may react to volatile gases witch are not refrigerant, such as evaporated gasoline and exhaust gas.)
- Repeat the test 2 or 3 times.
- Make sure that there is some refrigerant remaining in the refrigeration system.
  When compressor is OFF: approx. 392 – 588 kPa (4 – 6 kgf/ cm^2, 57 – 85 psi)

(b) Bring the gas leak detector close to the drain hose before performing the test.

HINT:

- After the blower motor stopped, leave the cooling unit for more than 15 minutes.
- Expose the gas leak detector sensor the under the drain hose.
- When bring the gas leak detector close to the drain hose, make sure that the gas leak detector does not react to the volatile gases.

If such reaction is unavoidable, the vehicle must be lifted up.

(c) If gas leak is not detected on the drain hose, remove the blower resistor from the cooling unit. Then insert the gas leak detector sensor into the unit and perform the test.

(d) Disconnect the connector and leave the pressure switch for approx. 20 minutes. Then bring the gas leak detector close to the pressure switch and perform the test.

(e) Bring the gas leak detector close to the refrigerant lines and perform the test.

AC0LJ–03

EVACUATING

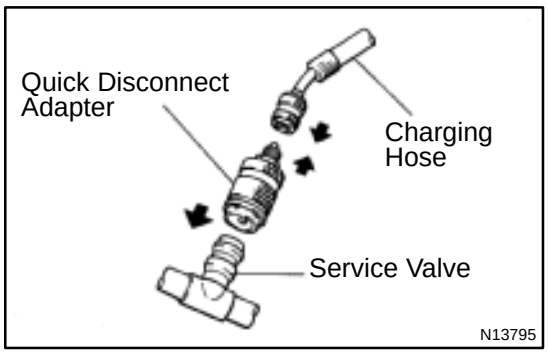

1. CONNECT QUICK DISCONNECT ADAPTER TO CHARGING HOSES

2. REMOVE CAPS FROM SERVICE VALVES ON REFRIGERANT LINES

3. SET ON MANIFOLD GAUGE SET

(a) Close both hand valves of manifold gauge set.

(b) Connect the quick disconnect adapters to the service valves.

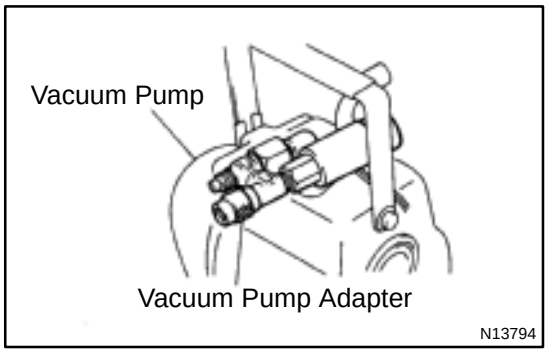

4. EVACUATE AIR FROM REFRIGERATION SYSTEM

(a) Connect the vacuum pump adapter to the vacuum pump.

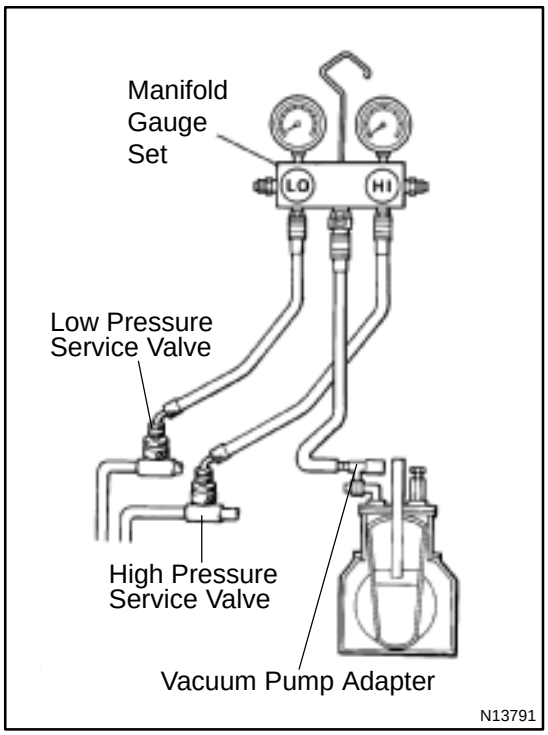

(b) Connect the center hose of the manifold gauge set to the vacuum pump adapter.

(c) Open both the high and low hand valves and run the vacuum pump.

(d) After 10 minutes or more, check that the low pressure gauge indicates 750 mmHg (30 in. Hg) or more.

HINT:

If the reading 750 mmHg (30 in. Hg) or more, close both hand valves of manifold gauge set and stop the vacuum pump.

Check the system for leaks and repair necessary.

(e) Close both the high and low hand valves and stop the vacuum pump.

(f) Leave the system in this condition for 5 minutes or more and check that there is no gauge indicator.

AC21S–01

CHARGING

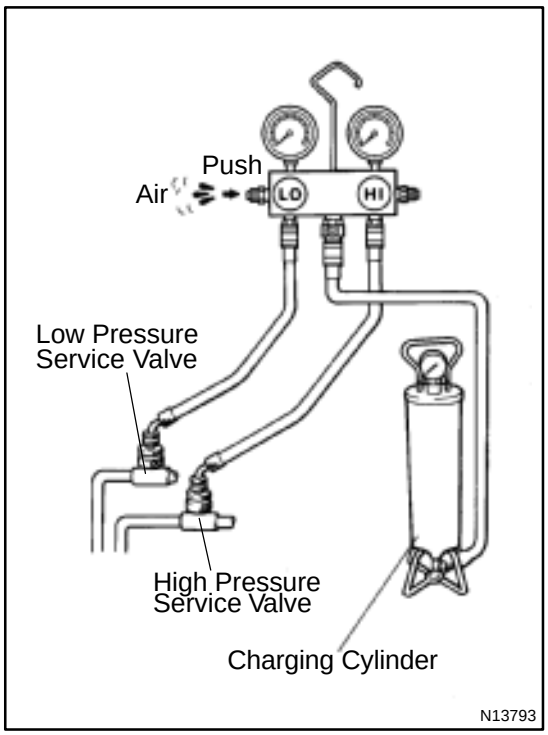

1. INSTALL CHARGING CYLINDER

HINT:

When handling the charging cylinder, always follow the directions given in the instruction manual.

(a) Charge the proper amount of refrigerant into the charging cylinder.

(b) Connect the center hose to the charging cylinder.

CAUTION:

Do not open both high and low hand valves of manifold gauge set.

(c) Open the valve of charging cylinder.

(d) Press the valve core on the side of manifold gauge and expel the air inside of the center hose.

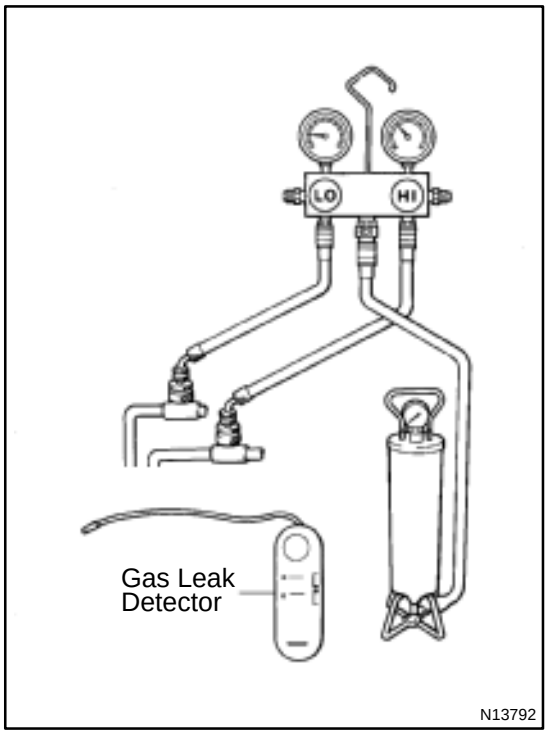

2. INSPECT REFRIGERATION SYSTEM FOR LEAKS

(a) Open the high pressure hand valve and charge refrigerant.

(b) When the low pressure gauge indicates 98 kPa (1 kgf/cm^2, 14 psi) close the high pressure hand valve.

(c) Using a gas leak detector, check the system for leakage.

(d) If leak is found, repair the faulty component or connection.

CAUTION:

Use the refrigerant recovery/ recycling machine to recover the refrigerant whenever replacing parts.

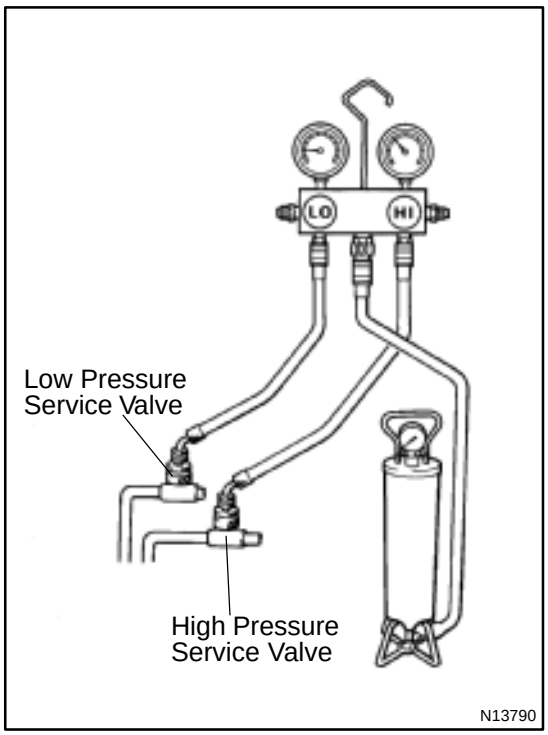

3. CHARGE REFRIGERANT INTO REFRIGERANT SYSTEM

If there is no leak after refrigerant leak check, charge the proper amount of refrigerant into refrigeration system.

CAUTION:

- **Never run the engine when charging the system through the high pressure side.**
- **Do not open the low pressure hand valve when the system is being charged with liquid refrigerant.**

(a) Open the high pressure hand valve fully.

(b) Charge specified amount of refrigerant, then close the high pressure hand valve.

HINT:

A fully charged system is indicated by the sight glass being free of any bubbles.

(c) Charge partially refrigeration system with refrigerant.

(1) Set vehicle in these conditions:

- Running engine at 1,500 rpm
- Blower speed control set at ”HI”
- Temperature control set at ”MAX. COOL”
- Air inlet control set at ”RECIRC”
- Fully open doors (Sliding roof: closed)

(2) Open the low pressure hand valve.

CAUTION:

Do not open the high pressure hand valve.

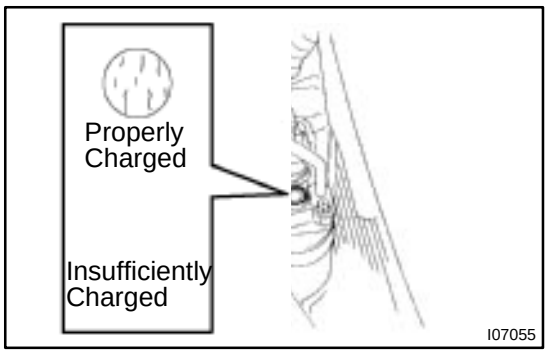

(d) Charge refrigerant until bubbles disappear and check the pressure on the gauge through the sight glass.

AC0LL–02

LOCATION

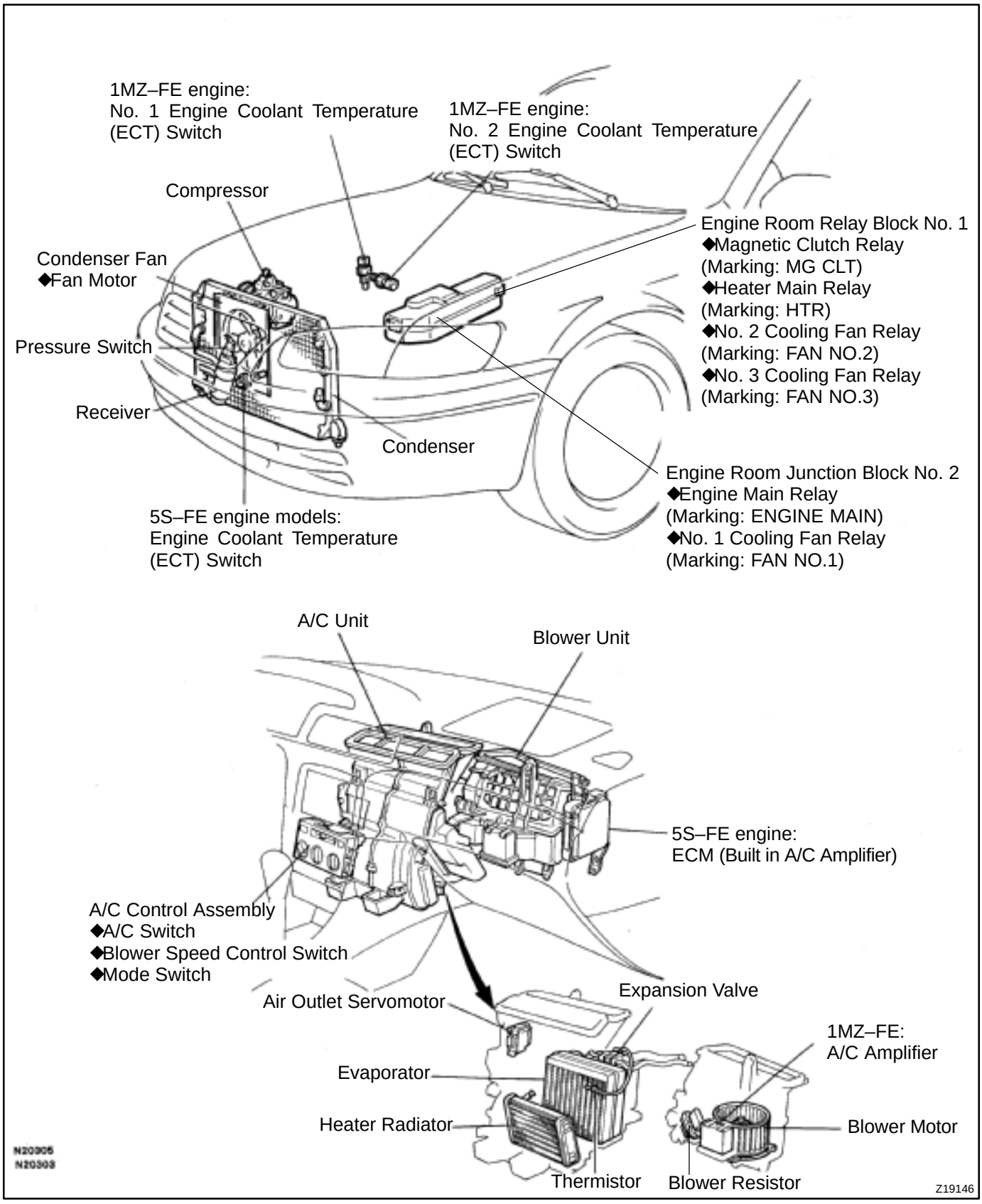

TROUBLESHOOTING

AC21T–01

PROBLEM SYMPTOMS TABLE

Use the table below to help you find the cause of the problem. The numbers indicate the priority of the likely cause of the problem. Check each part in order. If necessary, replace these parts.

Symptom	Suspect Area	See page
No blower operation	4. HTR Fuse	–
	5. Heater main relay	AC–70
	6. Blower motor	AC–63
	7. Blower resistor	AC–64
	8. Blower speed control switch	AC–84
	9. Wire harness	–
No air temperature control	1. Engine coolant volume	–
	2. A/C control assembly	AC–80
No air inlet control	1. A/C control assembly	AC–80
No air outlet control	1. HTR Fuse	–
	2. Air outlet servomotor	AC–65
	3. Mode switch	AC–84
No compressor operation	1. Refrigerant volume	AC–3
	2. A.C Fuse	–
	3. HTR Fuse	–
	4. Magnetic clutch relay	AC–71
	5. Magnetic clutch	AC–39
	6. Compressor	AC–39
	7. Pressure switch	AC–67
	8. Heater main relay	AC–70
	9. Blower speed control switch	AC–84
	10.A/C switch	AC–84
	11.*1 ECM	DI–218
	*2 A/C amplifier	AC–88
	12.Wire harness	–
No compressor operates intermittently	1. Refrigerant volume	AC–3
	2. Condenser fan	AC–74
	3. Pressure switch	AC–67
	4. *1 ECM	DI–218
	*2 A/C amplifier	AC–88
	5. Thermistor	AC–24
	6. Wire harness	–
No cool air comes out	1. Refrigerant volume	AC–3
	2. Refrigerant pressure	AC–3
	3. Drive belt	AC–16
	4. Compressor lock sensor	AC–16
	5. Magnetic clutch	AC–39
	6. Compressor	AC–39
	7. Pressure switch	AC–67
	8. Thermistor	AC–24
	9. A/C switch	AC–84
	10.*1 ECM	DI–218
	*2 A/C amplifier	AC–88
	11.Wire harness	–

Cool air comes out only at high engine rpm	1. Refrigerant volume 2. Drive belt 3. Magnetic clutch 4. Compressor 5. Condenser 6. Condenser fan 7. Receiver 8. Expansion valve 9. Evaporator 10.Thermistor 11.Refrigerant line 12.Pressure switch 13.*1 ECM *2 A/C amplifier	AC–3 AC–16 AC–16 AC–39 AC–52 AC–74 AC–49 AC–59 AC–30 AC–24 AC–21 AC–67 DI–218 AC–88
No engine idle–up when A/C switch ON	1. *1 ECM *2 A/C amplifier 2. Wire harness	DI–218 AC–88 –
Blinking of A/C indicator	1. *1 ECM *2 A/C amplifier 2. Thermistor 3. Compressor	DI–218 AC–88 AC–24 AC–39
A/C indicator does not lights up when turn mode switch to DEF. position	1. A/C Fuse 2. Mode switch 3. A/C switch 4. *1 ECM *2 A/C amplifier 5. Wire harness	– AC–84 AC–84 DI–218 AC–88 –
No warm air comes out	1. Engine coolant volume 2. A/C control assembly 3. Heater radiator	– AC–80 AC–57
No condenser fan operation	1. CDS FAN Fuse 2. Engine main relay 3. Cooling fan relay No. 1 4. Cooling fan relay No. 2 5. Cooling fan relay No. 3 6. Condenser fan motor 7. Pressure switch 8. *1 Engine coolant temp. switch *2 No. 1 Engine coolant temp. switch 9. *2No. 2 Engine coolant temp. switch 10.Wire harness	– – AC–72 AC–72 AC–72 AC–74 AC–67 AC–92 AC–92 AC–92 –

*1: 5S–FE Engine Models
*2: 1MZ–FE Engine Models

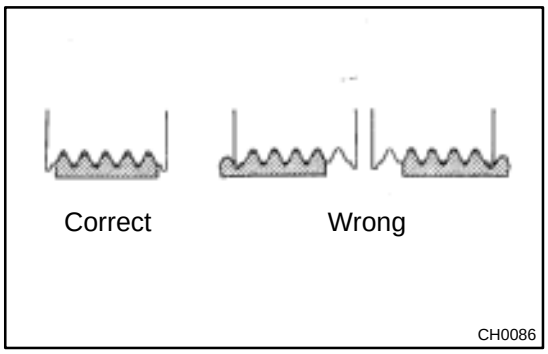

DRIVE BELT

AC0LM–02

ON–VEHICLE INSPECTION

1. INSPECT DRIVE BELT'S INSTALLATION CONDITION

Check that the drive belt fits properly in the ribbed grooves.

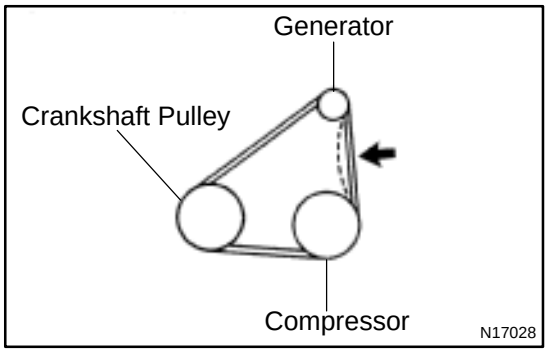

2. INSPECT DRIVE BELT TENSION

Using a belt tension gauge, check the drive belt tension.

Drive belt tension:
New belt: 165 ± 26 lbf
Used belt: 110 ± 11 lbf

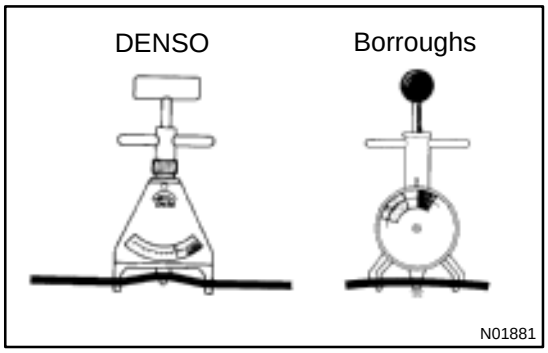

HINT:

- "New belt" refers to a belt which has been used less than 5 minutes on a running engine.
- "Used belt" refers to a belt which has been used on a running engine for 5 minutes or more.
- After installing the drive belt, check that it fits properly in the ribbed grooves.

AC0LN–02

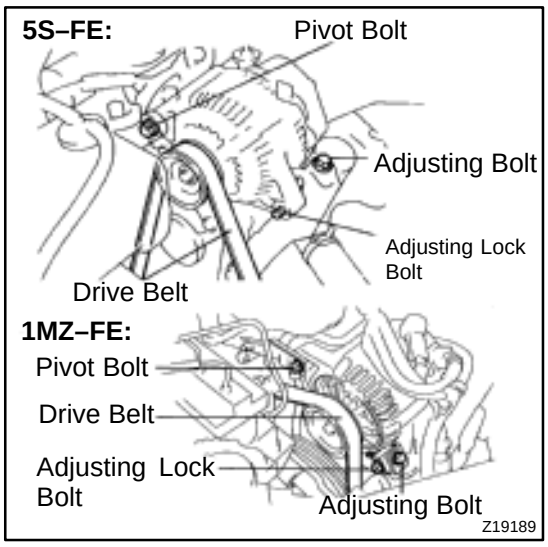

REMOVAL

REMOVE DRIVE BELT

(a) Loosen the pivot bolt and adjusting lock bolt.

Torque:
5S–FE:
Pivot bolt: 52 N·m (530 kgf·cm, 38 ft·lbf)
Adjusting lock bolt: 18 N·m (185 kgf·cm, 13 ft·lbf)
1MZ–FE:
Pivot bolt: 56 N·m (570 kgf·cm, 41 ft·lbf)
Adjusting lock bolt: 18 N·m (185 kgf·cm, 13 ft·lbf)

(b) Loosen the drive belt tension by adjusting bolt and remove the drive belt.

AC0LO–01

INSTALLATION

Installation is in the reverse order of removal (See page AC–17).

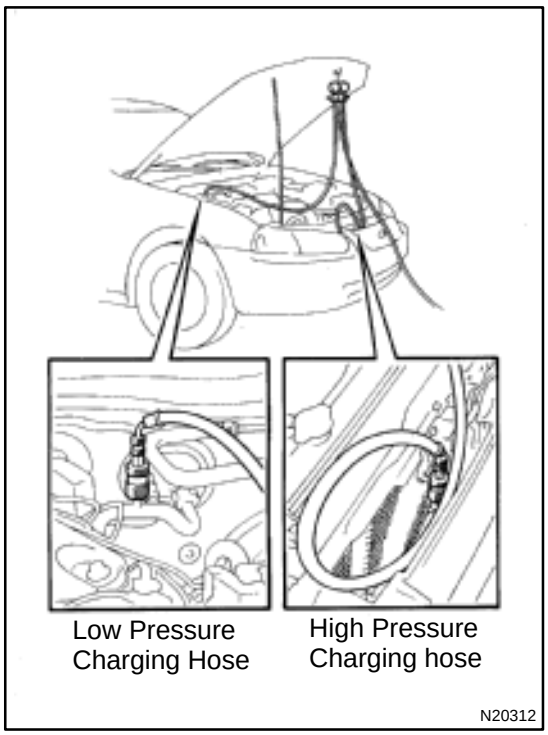

MANIFOLD GAUGE SET

AC0LP–02

SET ON

1. CONNECT CHARGING HOSES TO MANIFOLD GAUGE SET

Tighten the nuts by hand.

CAUTION:

Do not connect the wrong hoses.

2. CONNECT QUICK DISCONNECT ADAPTERS TO CHARGING HOSES

Tighten the nuts by hand.

3. CLOSE BOTH HAND VALVES OF MANIFOLD GAUGE SET

4. REMOVE CAPS FROM SERVICE VALVES ON REFRIGERANT LINE

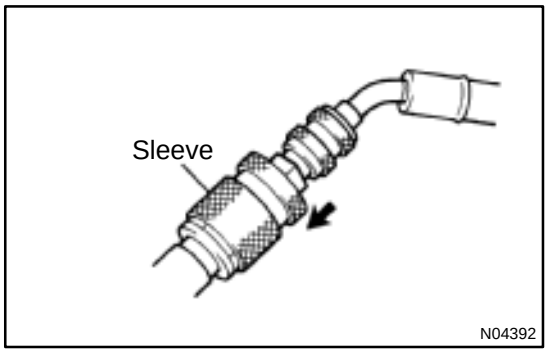

5. CONNECT QUICK DISCONNECT ADAPTERS TO SERVICE VALVES

HINT:

Push the quick disconnect adapter onto the service valve, then slide the sleeve of the quick disconnect adapter downward to lock it.

AC0LQ–02

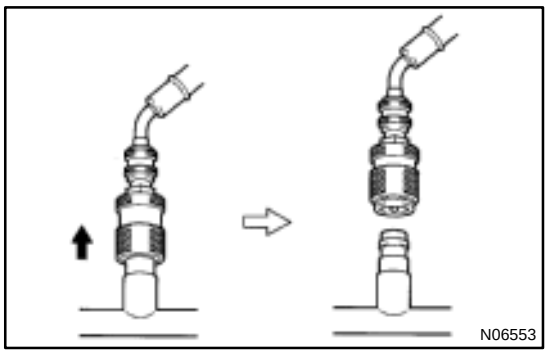

SET OFF

1. **CLOSE BOTH HAND VALVES OF MANIFOLD GAUGE SET**
2. **DISCONNECT QUICK DISCONNECT ADAPTERS FROM SERVICE VALVES ON REFRIGERANT LINE**

HINT:

Slide the sleeve of the quick disconnect adapter upward to unlock the adapter and remove it from the service valve.

3. **INSTALL CAPS TO SERVICE VALVES ON REFRIGERANT LINE**

REFRIGERANT LINE

AC0LR–01

ON–VEHICLE INSPECTION

1. INSPECTION HOSE AND TUBE CONNECTIONS FOR LOOSENESS

2. INSPECT HOSES AND TUBES FOR LEAKAGE

Using a gas leak detector, check for leakage of refrigerant.

AC0LS–02

LOCATION

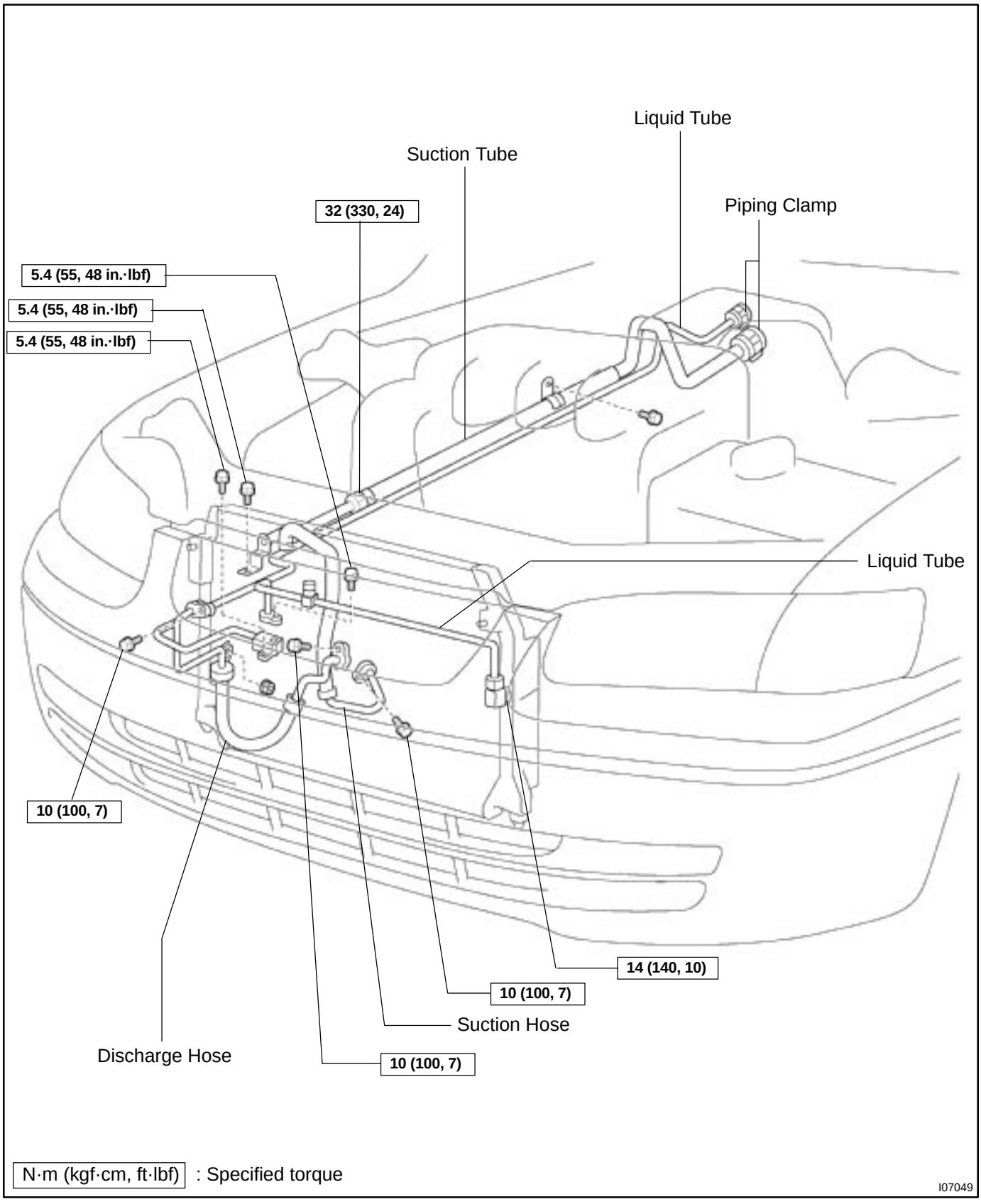

AC0LT–03

REPLACEMENT

1. DISCHARGE REFRIGERANT FROM REFRIGERATION SYSTEM

2. REPLACE FAULTY TUBE OR HOSE

NOTICE:

Cap the open fittings immediately to keep moisture or dirt out of the system.

3. TIGHTEN JOINT OF BOLT OR NUT TO SPECIFIED TORQUE

NOTICE:

Connections should not be torqued tighter than the specified torque.

Part tightened	N·m	kgf·cm	ft·lbf
Receiver x Liquid tube	5.4	55	48 in.·lbf
Condenser x Discharge hose	10	100	7
Condenser x Liquid tube	14	140	10
Compressor x Discharge hose	10	100	7
Compressor x Suction hose	10	100	7
Expansion valve x Evaporator	5.4	55	48 in.·lbf
Suction line (Piping joint)	32	330	24
Suction line (Block joint)	10	100	7

4. EVACUATE AIR FROM REFRIGERATION SYSTEM AND CHARGE WITH REFRIGERANT
Specified amount : 800 ± 50g (28.22 ± 1.76 oz.)

5. INSPECT FOR LEAKAGE OF REFRIGERANT

Using a gas leak detector, check for leakage of refrigerant.

6. INSPECT AIR CONDITIONING OPERATION

AIR CONDITIONING UNIT

AC21U–01

ON–VEHICLE INSPECTION

1. INSPECT FOR LEAKAGE OF REFRIGERANT

(a) Remove glove compartment (See page BO–75).

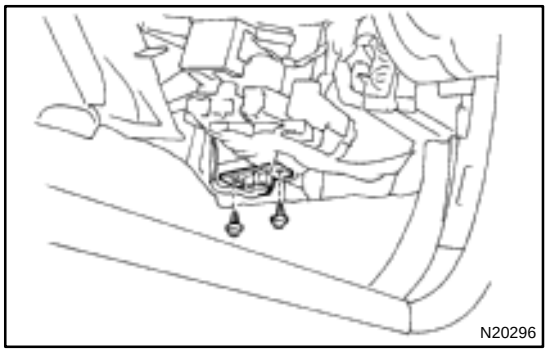

(b) Remove the blower resistor.
  (1) Disconnect the connector.
  (2) Remove the 2 screws and blower resistor.

(c) Using a gas leak detector, check for leakage.

If there is leakage, check the tightening torque at the joints or check the evaporator.

(d) Install the blower resistor.

(e) Install the lower No. 2 finish panel (See page BO–81).

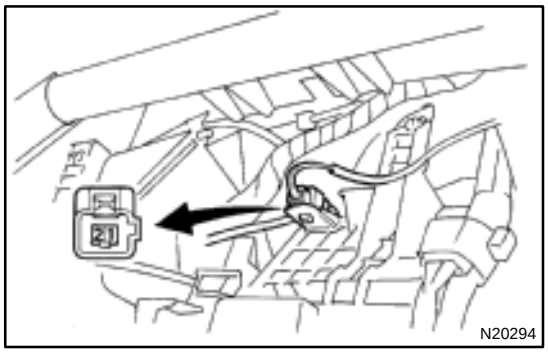

2. INSPECT THERMISTOR RESISTANCE

(a) Disconnect the connector.

(b) Measure resistance between terminals.

Standard resistance: 1,500 Ω at 25˚C (77˚F)

If resistance is not as specified, replace the thermistor.

AC21V–01

COMPONENTS

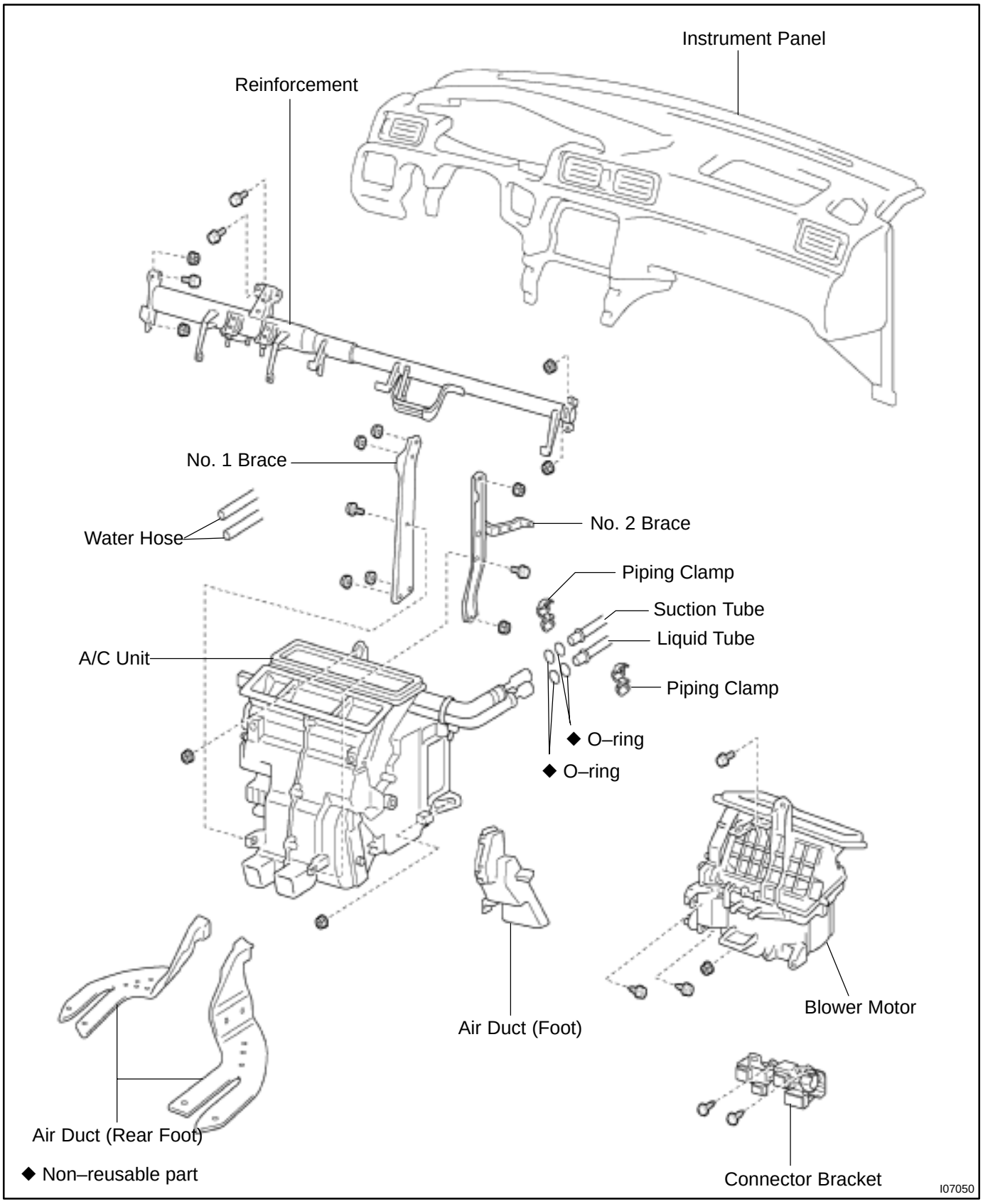

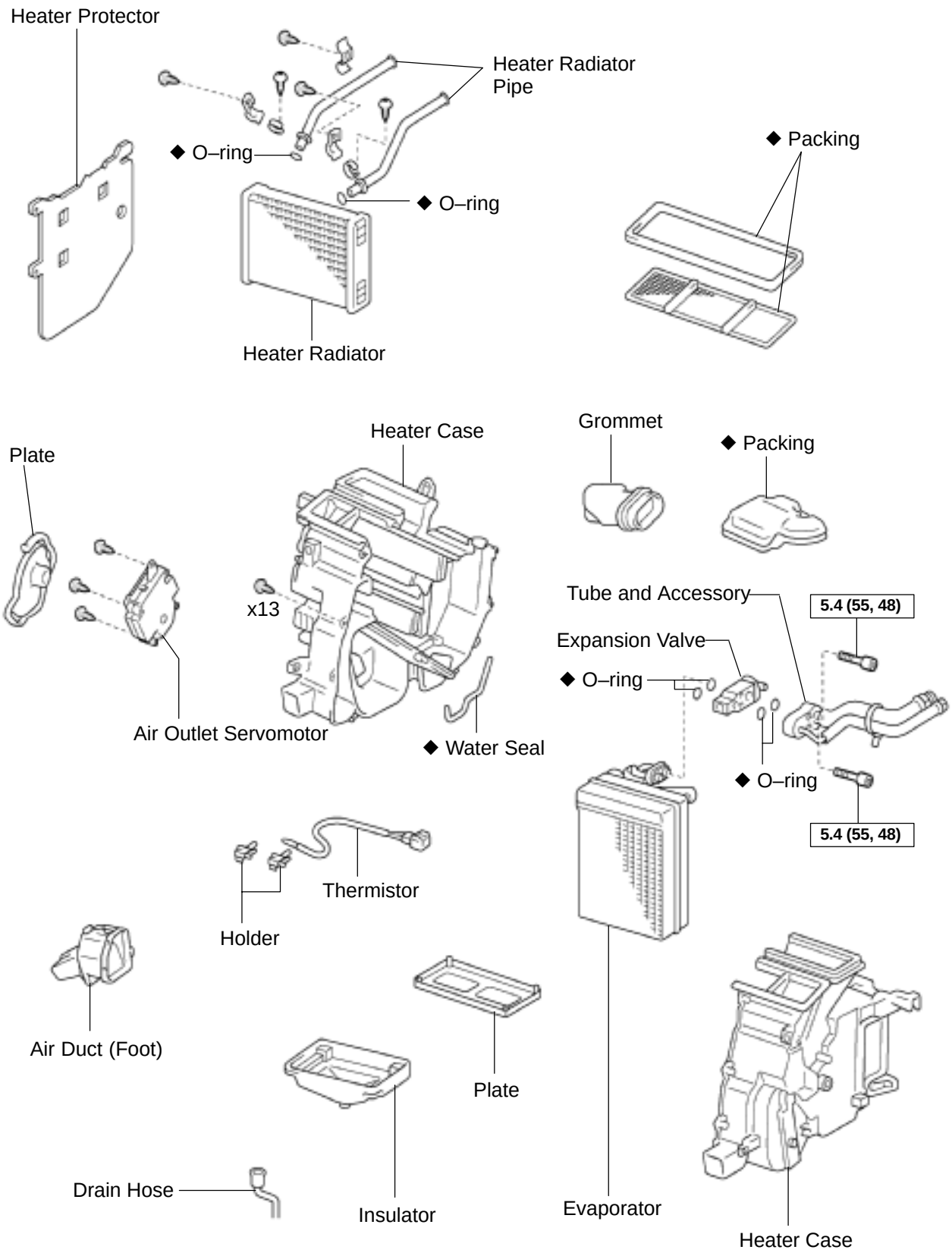

N·m (kgf·cm, in:lbf) : Specified torque

◆ Non–reusable part

I07051

Author : Date : 2508

AC21W–01

REMOVAL

1. DISCHARGE REFRIGERANT FROM REFRIGERATION SYSTEM

HINT:

At the time of installation, please refer to the following item.

Evacuate air from refrigeration system.

Charge system with refrigerant and inspect for leakage of refrigerant.

Specified amount: 800 ± 50 g (28.22 ± 1.76 oz.)

2. DRAIN ENGINE COOLANT FROM RADIATOR

HINT:

It is not necessary to drain out all the coolant.

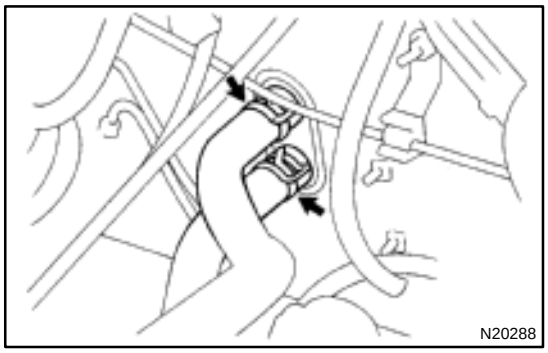

3. DISCONNECT WATER HOSE FROM HEATER RADIATOR PIPES

(a) Using pliers, grip the claws of the hose clip and slide the hose clip along the hose.

(b) Disconnect the water hose.

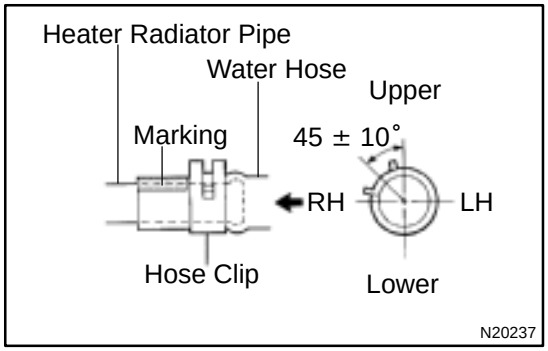

HINT:

At the time of installation, please refer to the following items.

- Push the water hose onto the heater radiator pipe as far as ridge on the pipe and install the hose clip.
- Install the hose clip in a position, as shown in the illustration.

4. REMOVE BLOWER UNIT (See page AC–35)

5. REMOVE INSTRUMENT PANEL AND REINFORCEMENT (See page BO–75)

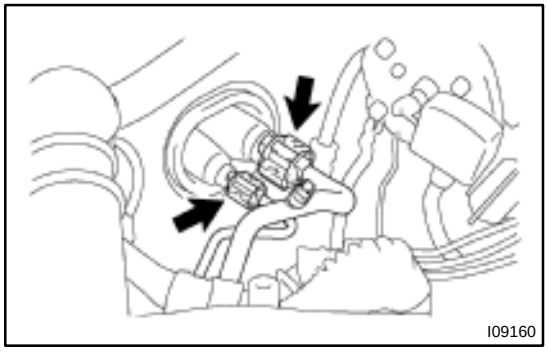

6. DISCONNECT LIQUID AND SUCTION TUBES

(a) Using SST, remove the 2 piping clamps.

SST 09870–00015 (Suction tube)
09870–00025 (Liquid tube)

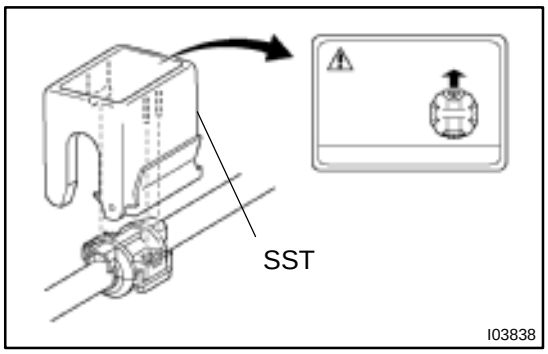

(1) Inert SST to piping clamp.

HINT:

Confirm the direction of the piping clamp claw and SST using the illustration showing on the caution label.

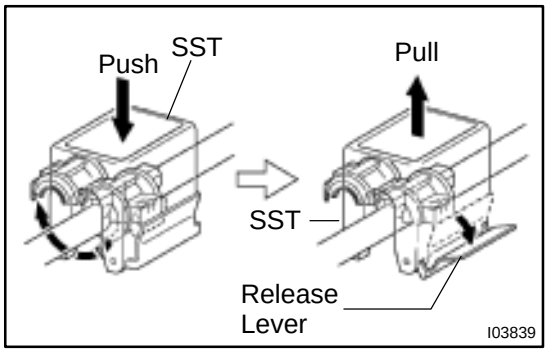

(2) Push down SST and release the clamp lock.

NOTICE:

Be careful not to deform the tubes, when pushing SST.

(3) Pull SST slightly and push the release lever, then remove the piping clamp with SST.

(4) Remove the piping clamp from SST.

(b) Disconnect the both tubes.

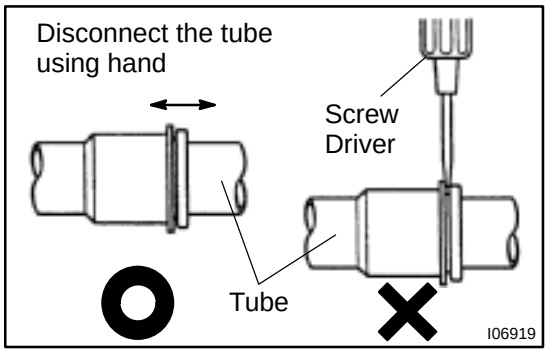

NOTICE:

- **Do not use tools like screwdriver to remove the tube.**
- **Cap the open fittings immediately to keep moisture or dirt out of the system.**

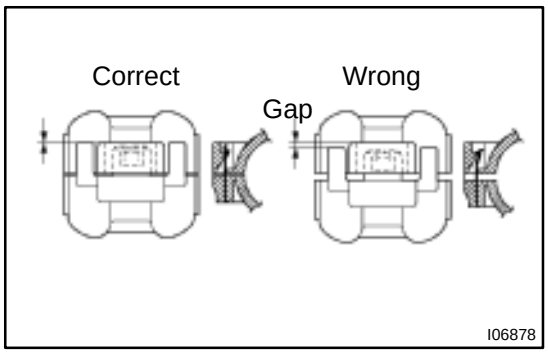

HINT:

At the time of installation, please refer to the following item.

- Lubricate 4 new O–rings with compressor oil and install the tubes.
- After connection, check the fitting for claw of the piping clamp.

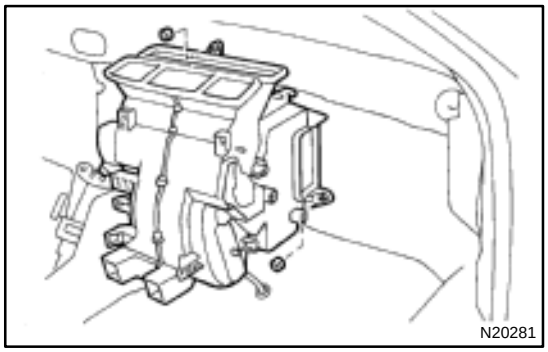

7. REMOVE A/C UNIT

(a) Disconnect the connector.

(b) Slide the floor carpet backward.

(c) Remove the rear heater duct.

(d) Remove the 2 nuts and A/C unit.

AC21X–01

DISASSEMBLY

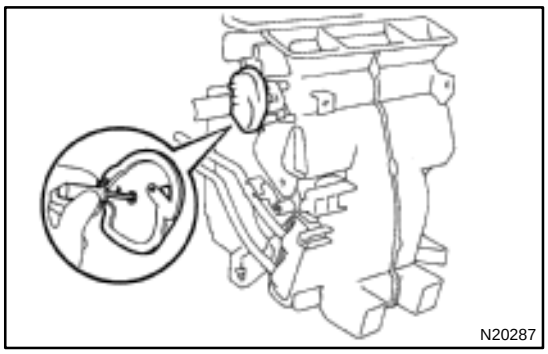

1. REMOVE AIR OUTLET SERVOMOTOR

(a) Release the claw and pull out the plate.

(b) Remove the 3 screws and servomotor.

2. REMOVE HEATER RADIATOR

(a) Remove the 3 screws and 3 plates.

(b) Remove the 2 clips and heater radiator pipes.

(c) Pull out the heater radiator.

3. REMOVE THESE FOOT AIR DUCT LH

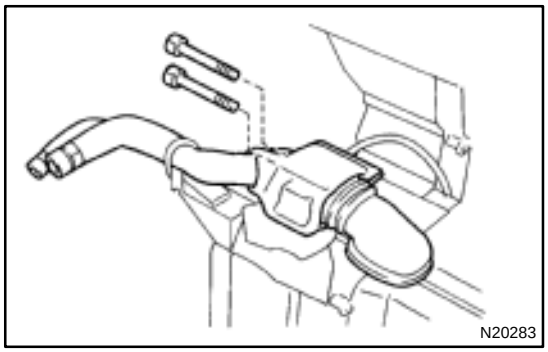

4. REMOVE EXPANSION VALVE

(a) Remove piping clamp.

(b) Remove the packings.

(c) Using a hexagon wrench (5.0 mm, 0.20 in.), remove the 2 bolts and separate the expansion valve and evaporator.

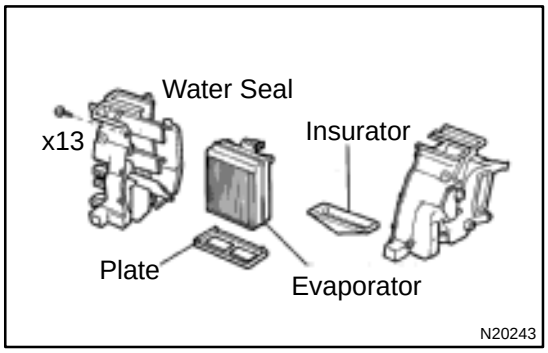

5. REMOVE EVAPORATOR

(a) Remove the grommet from the evaporator.

(b) Using a knife, cut off each packings.

HINT:

Do not reuse the packing.

(c) Remove the 13 screws and separate the heater cases, then remove the evaporator and water seal.

(d) Release the 4 claws and remove the plate from the evaporator.

6. PEEL OFF THE WATER SEAL FROM HEATER UNIT

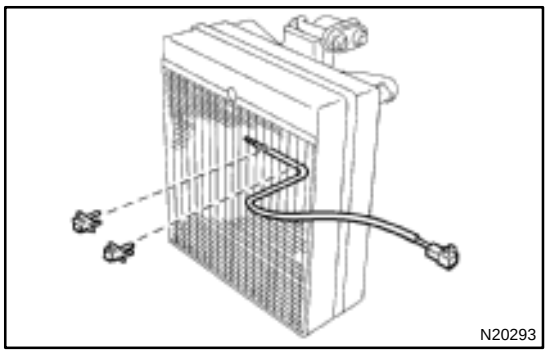

7. REMOVE THERMISTOR

Pull out the thermistor with the holders.

AC21Y–01

INSPECTION

1. CHECK EVAPORATOR FINS FOR BLOCKAGE

If the fins are clogged, clean them with compressed air.

NOTICE:

Never use water to clean the evaporator.

2. CHECK FITTING FOR CRACKS OR SCRATCHES

Repair as necessary.

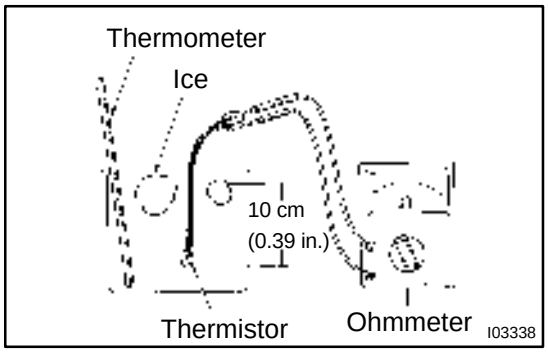

3. INSPECT THERMISTOR RESISTANCE

(a) Place the thermistor in cold water, and while changing the temperature of water, measure resistance at the connector and at the same time, measure temperature of water with a thermometer.

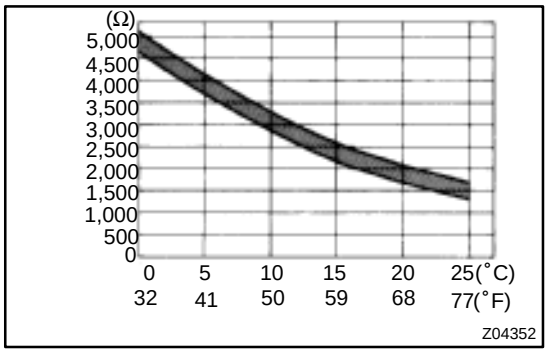

(b) Compare the 2 readings on the chart.

If resistance value is not as specified, replace the thermistor.

AC0LX–02

REASSEMBLY

1. INSTALL THERMISTOR TO EVAPORATOR

2. INSTALL EVAPORATOR

(a) Install the plate to the evaporator.

(b) Install the evaporator on the insulator.

(c) Connect the heater case with the 13 screws.

NOTICE:

The packing for water seal should be replaced, with a new one when the A/C unit is reassembled.

(d) Install the 2 new packings.

(e) Install the grommet to evaporator.

HINT:

If evaporator is replaced, add compressor oil to the compressor.

Add 40 – 50 cc (1.4 – 1.7 fl.oz.)
Compressor oil: ND – OIL 8 or equivalent

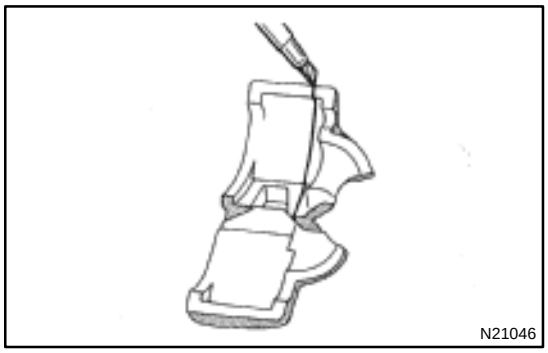
N21046

3. INSTALL EXPANSION VALVE

(a) Lubricate 2 new O–rings with compressor oil and install the tubes.

(b) Install the liquid tube and suction tube on the expansion valve.

(c) Using a knife, cut off packing paper of packing while peel off the paper, as shown in the illustration.

HINT:

Leave the packing paper untaped on the tube side so that the installation bolt hole for remains visible.

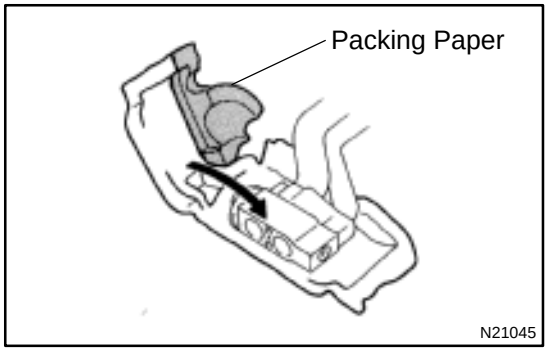

N21045

(d) Apply new packing.

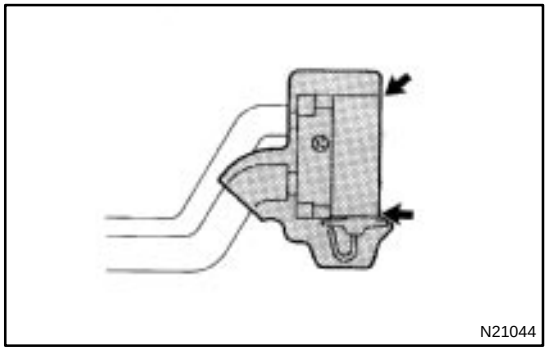
N21044

NOTICE:

Do not overtape the packing beyond the expansion valve edge.

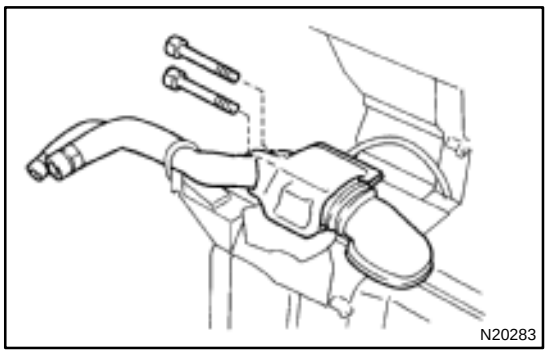
N20283

(e) Lubricate 2 new O–rings with compressor oil and install the expansion valve.
(f) Install the expansion valve with the tubes to evaporator with the 2 bolts.

Torque: 5.4 N·m (55 kgf·cm, 48 in.·lbf)

NOTICE:

When installing the expansion valve, take care so that the packing is not jammed with the evaporator.

(g) Peel off the remaining packing paper and apply the packing to expansion valve.

4. INSTALL HEATER RADIATOR

(a) Install the heater radiator to heater case.
(b) Install the heater radiator pipe with 2 clips.
(c) Install the 3 clamps with the 3 screws.

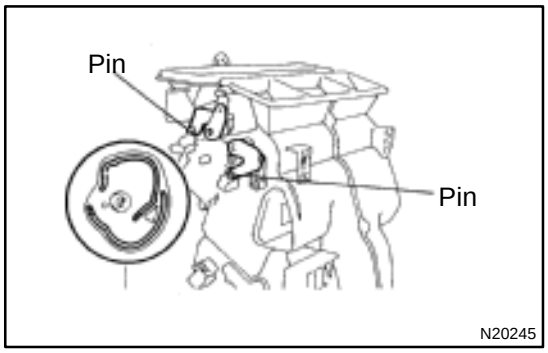

N20245

5. INSTALL MODE SERVOMOTOR

(a) Install the servomotor with the 3 screws.
(b) Insert the drain of the plate to the pin and install plate.

AC0LY–01

INSTALLATION

Installation is in the reverse order of removal (See page AC–27).

BLOWER UNIT

AC0LZ–02

COMPONENTS

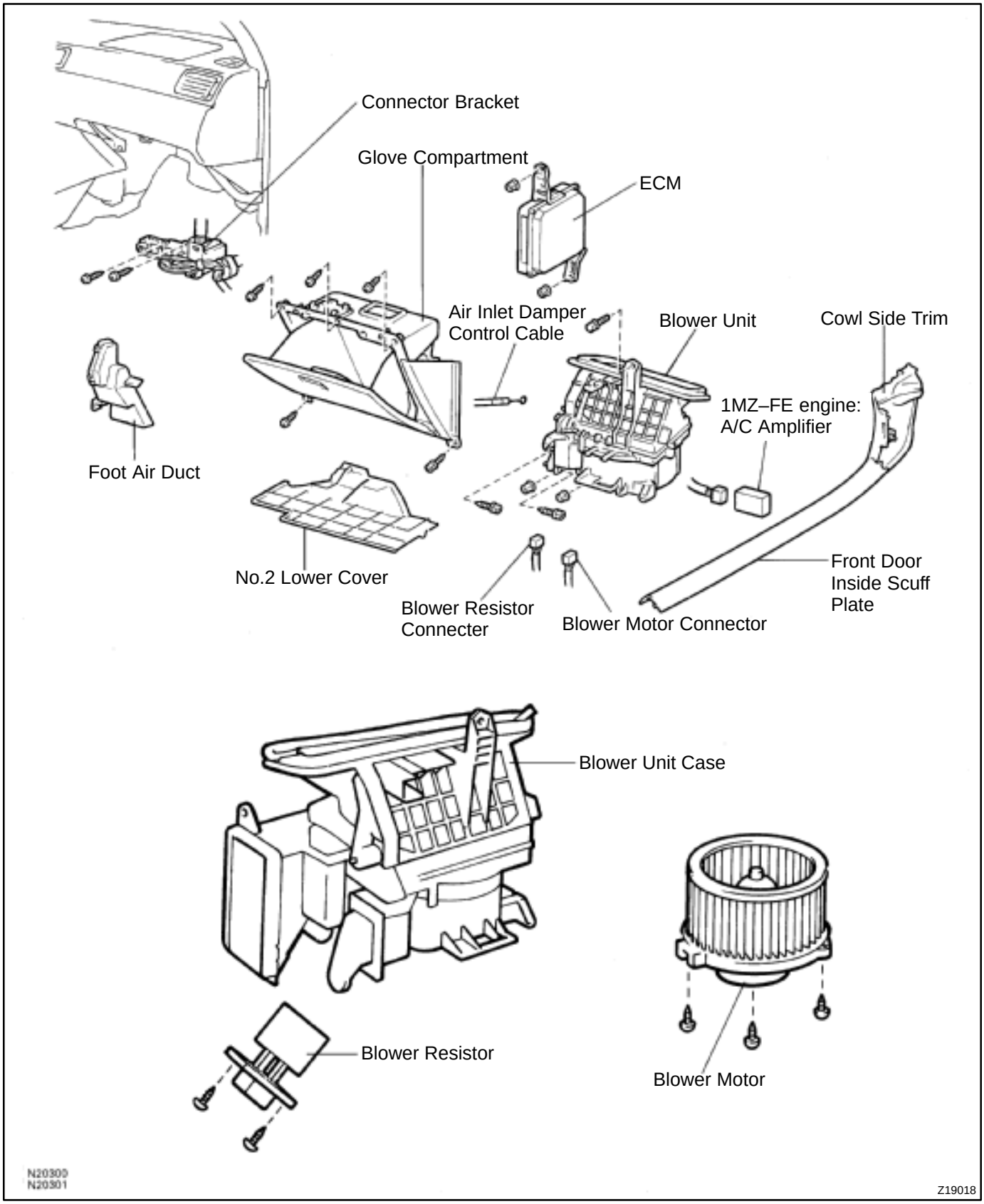

AC0M0–02

REMOVAL

1. REMOVE COWL SIDE TRIM

2. REMOVE FRONT DOOR INSIDE PLATE LH

3. REMOVE NO. 2 LOWER COVER

4. REMOVE GLOVE COMPARTMENT

5. REMOVE ECM

(a) Disconnect the connectors.

(b) Remove the 2 nuts and ECM.

6. DISCONNECT AIR INLET DAMPER CONTROL CABLE

HINT:

At the in time of installation, please refer to following item.

After connection, inspect the air inlet control lever operation.

(See page AC–87).

7. REMOVE A/C AMPLIFIER.

(a) Disconnect the connector.

(b) Release the 2 claws and pull out the amplifier.

8. REMOVE CONNECTOR BRACKET SET SCREWS

9. REMOVE BLOWER UNIT

(a) Disconnect the connector.

(b) Disconnect the thermistor connector clamp.

(c) Remove the 2 screws, bolt and nut, then remove the blower unit.

AC0M1–01

DISASSEMBLY

1. REMOVE BLOWER MOTOR

Remove the 3 screws and blower motor.

2. REMOVE BLOWER RESISTOR

Remove the 2 screws and blower resistor.

AC0M2–01

REASSEMBLY

Reassembly is in the reverse order of disassembly (See page AC–36).

AC0M3–01

INSTALLATION

Installation is in the reverse order of removal (See page AC–35).

COMPRESSOR AND MAGNETIC CLUTCH

AC0M4–02

ON–VEHICLE INSPECTION

1. INSPECT COMPRESSOR FOR METALLIC SOUND

(a) Start engine.

(b) Check if there is a metallic sound from the compressor when the A/C switch is on.

If metallic sound is heard, replace the compressor assembly.

2. INSPECT REFRIGERANT PRESSURE

See ”ON–VEHICLE INSPECTION” of AIR CONDITIONING SYSTEM on page AC–3.

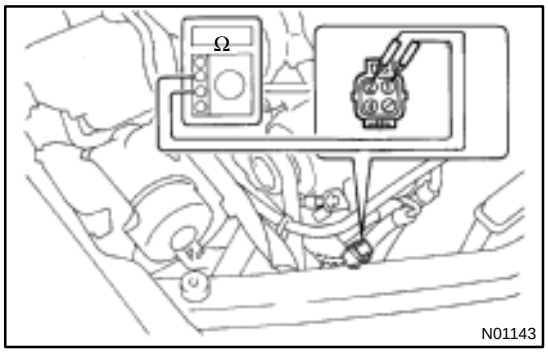

3. INSPECT COMPRESSOR LOCK SENSOR RESISTANCE

(a) Disconnect the connector.

(b) Measure resistance between terminals 1 and 2.

Standard resistance: 65 – 125 Ω at 20 ˚C (68 ˚F)

If resistance is not as specified, replace the compressor assembly.

4. INSPECT VISUALLY FOR LEAKAGE OF REFRIGERANT FROM SAFETY SEAL

Using a gas leak detector, check for leakage of refrigerant.

If there is any leakage, replace the compressor assembly.

5. CHECK FOR LEAKAGE OF GREASE FROM CLUTCH BEARING

6. CHECK FOR SIGNS OF OIL ON PRESSURE PLATE OR ROTOR

7. INSPECT MAGNETIC CLUTCH BEARING FOR NOISE

(a) Start engine.

(b) Check for abnormal noise from near the compressor when the A/C switch is OFF.

If abnormal noise is being emitted, replace the magnetic clutch.



8. INSPECT MAGNETIC CLUTCH OPERATION

(a) Disconnect the connector.

(b) Connect the positive (+) lead from the battery to terminal 4 and the negative (–) lead to the body ground.

(c) Check that the magnetic clutch is energized.

If operation is not as specified, replace the magnetic clutch.

AC0M5–02

COMPONENTS

5S–FE engine :

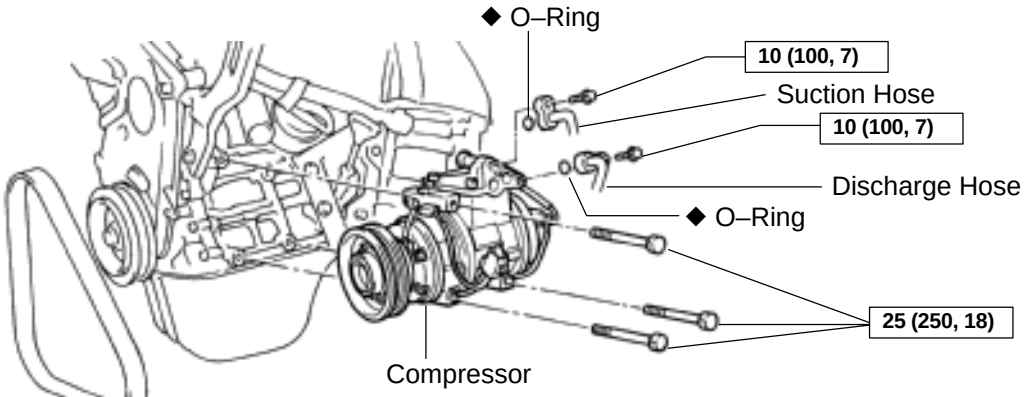

1MZ–FE engine :

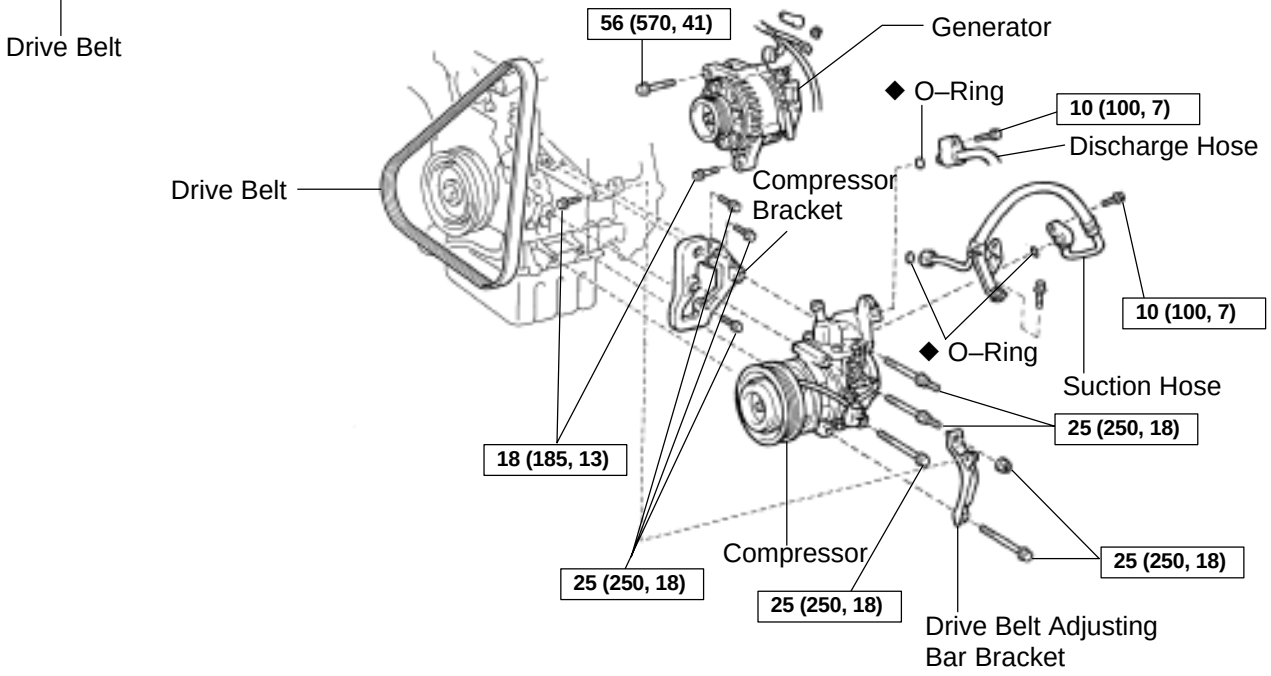

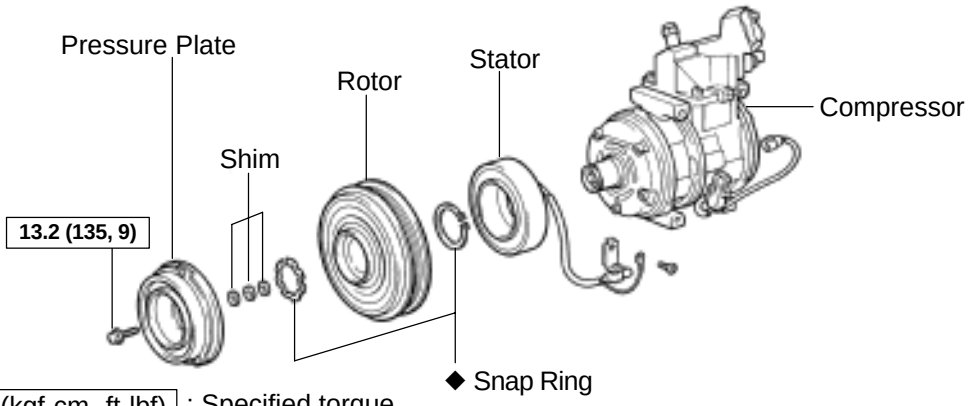

N·m (kgf·cm, ft·lbf) : Specified torque

◆ Non–reusable part

I03331

AC0M6–02

REMOVAL

1. **RUN ENGINE AT IDLE SPEED WITH A/C ON FOR APPROX.10 MINUTES**
2. **STOP ENGINE**
3. **DISCONNECT NEGATIVE (–) TERMINAL CABLE FROM BATTERY**
4. **DISCHARGE REFRIGERANT FROM REFRIGERATION SYSTEM**
5. **REMOVE DRIVE BELT**
   (See page AC–17)

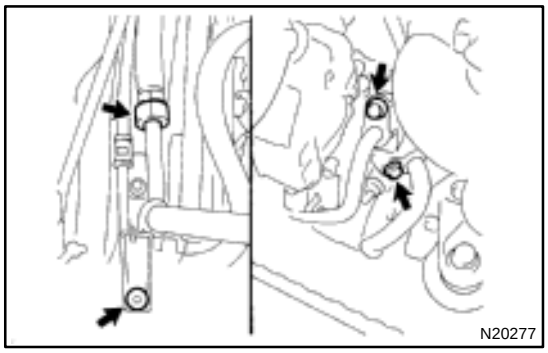
N20277

6. **1MZ–FE engine models:**
   REMOVE SUCTION HOSE

(a) Remove the suction hose clamping bolt.
(b) Disconnect the wire harness clamp.
(c) Loosen the nut and bolts and remove the suction hose.

NOTICE:
Cap the open fittings immediately to keep moisture or dirt out of the system.

7. **1MZ–FE engine models:**
   DISCONNECT DISCHARGE HOSE

Remove the bolt and disconnect the hose.

NOTICE:
Cap the open fittings immediately to keep moisture or dirt out of the system.

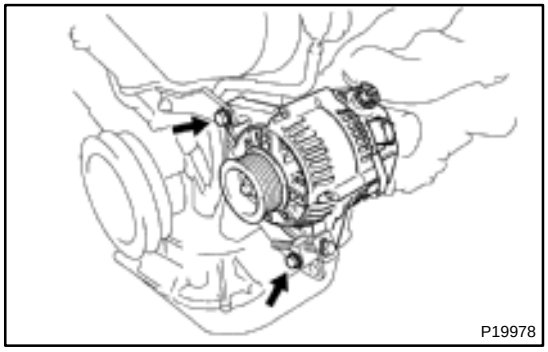
P19978

8. **1MZ–FE engine models:**
   REMOVE GENERATOR

(a) Disconnect the generator connector.
(b) Remove the nut, and disconnect the generator wire.
(c) Disconnect the wire harness from the clip.
(d) Remove the pivot bolt, plate washer, adjusting lock bolt and generator.



9. 5S–FE engine models:
DISCONNECT DISCHARGE AND SUCTION HOSES

Remove the 2 bolts and disconnect both hoses.

NOTICE:

Cap the open fittings immediately to keep moisture or dirt out of the system.

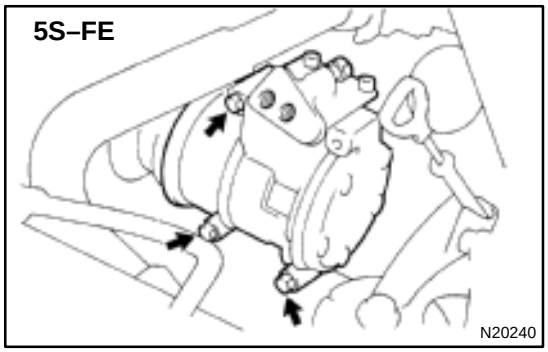

10. 5S–FE engine models:
REMOVE COMPRESSOR

(a) Disconnect the connector.
(b) Remove the 3 bolts and compressor.

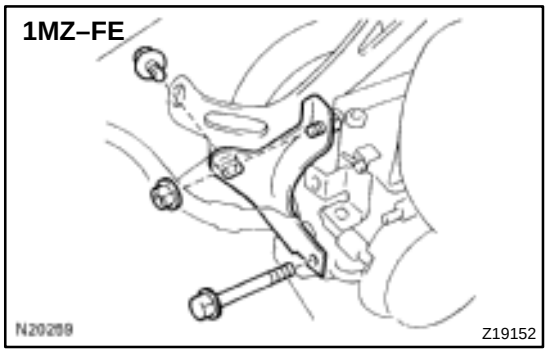

11. 1MZ–FE engine models:
REMOVE COMPRESSOR

(a) Disconnect the connector.
(b) Remove the 2 bolts, nut and drive belt adjusting bar bracket.

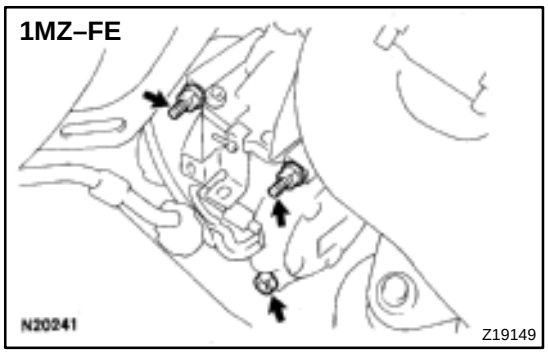

(c) Remove the 3 bolts and compressor.

AC0M7–02

DISASSEMBLY

1. REMOVE PRESSURE PLATE

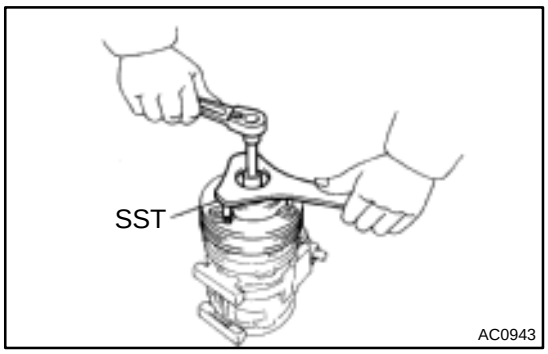

(a) Using SST and a socket wrench, remove the shaft bolt.
SST 07112–76060
Torque: 13.2 N·m (135 kgf·cm, 9 ft·lbf)

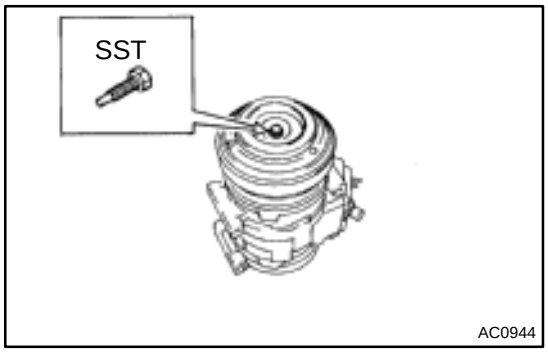

(b) Install SST on the pressure plate.
SST 07112–66040

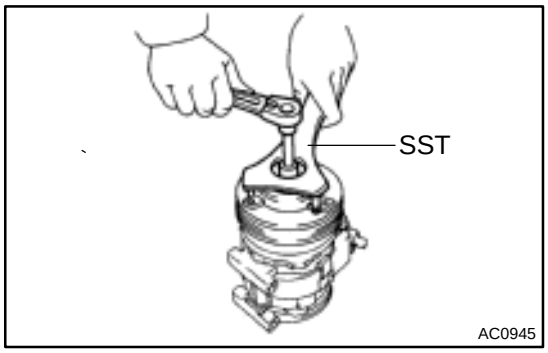

(c) Using SST and socket wrench, remove the pressure plate.
SST 07112–66040, 07112–76060

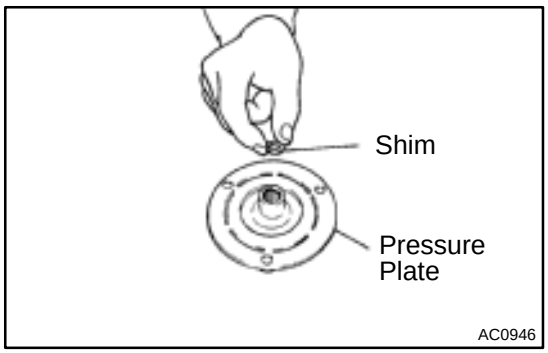

(d) Remove the shims from the pressure plate.

2. REMOVE ROTOR

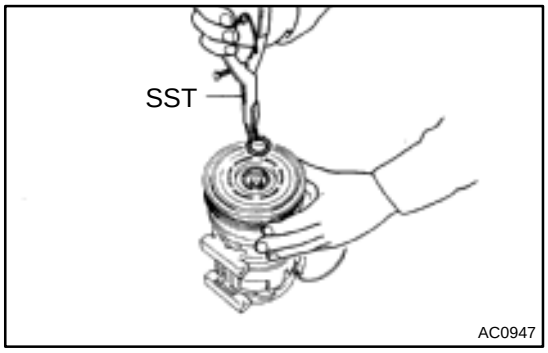

(a) Using SST, remove the snap ring.
SST 07114–84020

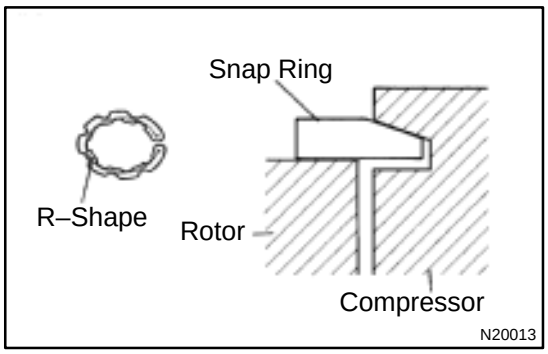

NOTICE:
At the time of reassembly, please refer to the following item.
The snap ring should be installed so that beveled side faces up.

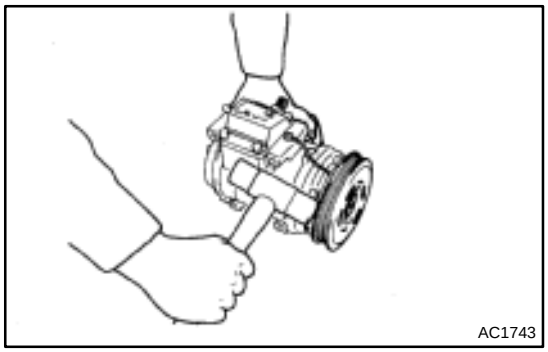

(b) Using a plastic hammer, tap the rotor off the shaft.

NOTICE:
Be careful not to damage the pulley when tapping on the rotor.

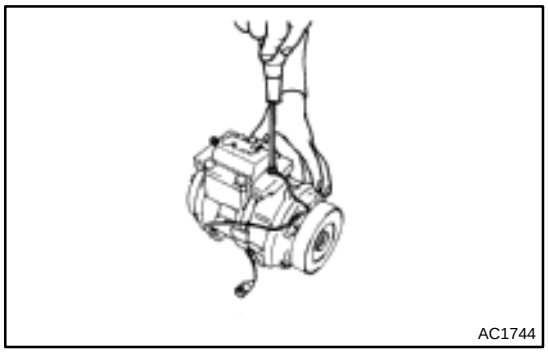

3. REMOVE STATOR

(a) Disconnect the stator lead wire from the compressor housing.

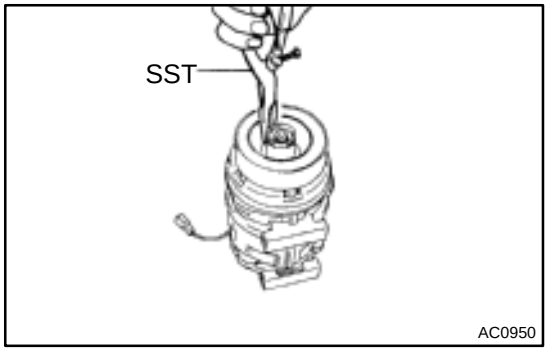

(b) Using SST, remove the snap ring.
SST 07114–84020

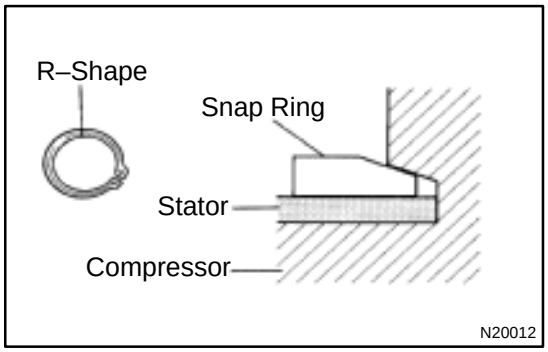

NOTICE:
At the time of reassembly, please refer to the following item.
The snap ring should be installed so that its beveled side faces up.

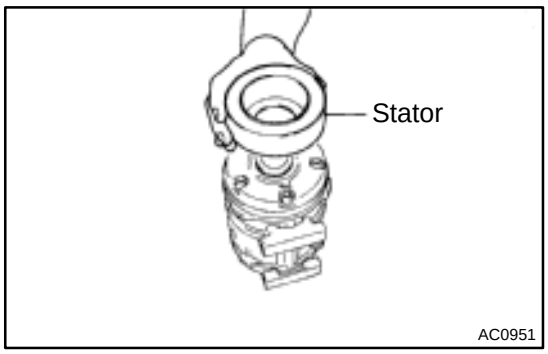

(c) Remove the stator.

AC0M8–02

REASSEMBLY

Reassembly is in the reverse order of disassembly (See page AC–43).

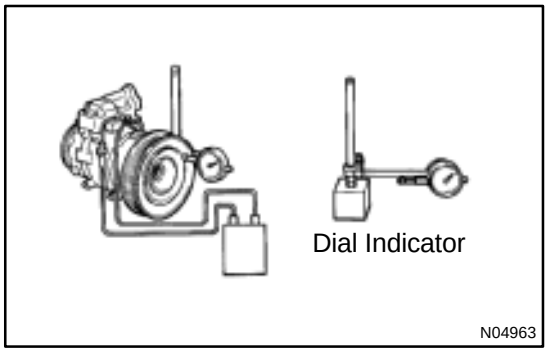

AFTER REASSEMBLY, CHECK MAGNETIC CLUTCH CLEARANCE

(a) Set the dial indicator to the pressure plate of the magnetic clutch.

(b) Connect the magnetic clutch lead wire to the positive (+) terminal of the battery.

(c) Check the clearance between the pressure plate and rotor when connecting the negative (–) terminal to the battery.

Standard clearance:
0.5 ± 0.15 mm (0.020 ± 0.0059 in.)

If the clearance is not within the standard clearance, adjust the clearance using shims to obtain the standard clearance.

Shim thickness:
0.1 mm (0.004 in.)
0.3 mm (0.012 in.)
0.5 mm (0.020 in.)

AC0M9–02

INSTALLATION

1. 5S–FE engine models:
INSTALL COMPRESSOR

(a) Install the compressor with 3 bolts.
Torque: 25 N·m (250 kgf·cm, 18 ft·lbf)

(b) Connect the connector.

2. 1MZ–FE engine models:
INSTALL COMPRESSOR

(a) Install the compressor with 3 bolts.
Torque: 25 N·m (250 kgf·cm, 18 ft·lbf)

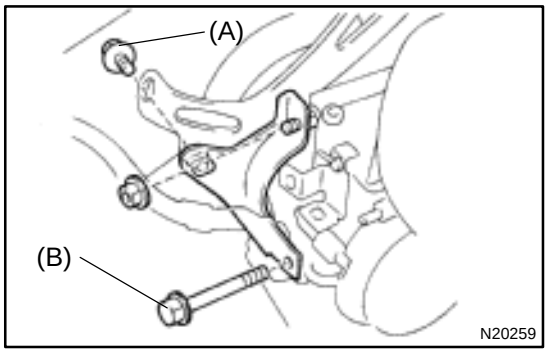

(b) Install the drive belt adjusting bar bracket with 2 bolts and nut.
Torque:
Bolt (A): 25 N·m (250 kgf·cm, 18 ft·lbf)
Bolt (B): 18 N·m (185 kgf·cm, 13 ft·lbf)
Nut: 25 N·m (250 kgf·cm, 18 ft·lbf)

(c) Connect the connector.

3. 5S–FE engine models:
CONNECT DISCHARGE AND SUCTION HOSE

Connect the both hoses with the 2 bolts.
Torque: 10 N·m (100 kgf·cm, 7 ft·lbf)

NOTICE:
Hoses should be connected immediately after the caps have been removed.

HINT:
Lubricate 2 new O–rings with compressor oil and install the tubes.

4. 1MZ–FE engine models:
INSTALL GENERATOR

(a) Mount generator on the generator bracket with the pivot bolt and adjusting lock bolt. Do not tighten the bolts yet.

(b) Connect the generator connector.

(c) Connect the generator wire with the nut.

5. 1MZ–FE engine models:
CONNECT DISCHARGE HOSE

Connect the discharge hose with the bolt.

Torque: 10 N·m (100 kgf·cm, 7 ft·lbf)

NOTICE:

Hoses should be connected immediately after the caps have been removed.

HINT:

Lubricate a new O–ring with compressor oil and install the tube.

6. INSTALL SUCTION HOSE

(a) Install the suction hose and tighten the bolt and nut.

Torque:
Piping joint: 32 N·m (330 kgf·cm, 24 ft·lbf)
Block joint: 10 N·m (100 kgf·cm, 7 ft·lbf)

HINT:

Lubricate 2 new O–rings with compressor oil and install the hose.

(b) Install the suction hose clamping bolt.

(c) Connect the wire harness clamp.

7. INSTALL AND CHECK DRIVE BELT
(See page AC–18, AC–16)

8. CONNECT NEGATIVE (–) TERMINAL CABLE TO BATTERY

9. EVACUATE AIR FROM REFRIGERATION SYSTEM AND CHARGE SYSTEM WITH REFRIGERANT
Specified amount: 800 ± 50 g (28.22 ± 1.76 oz.)

10. INSPECT FOR LEAKAGE OF REFRIGERANT

Using a gas leak detector, check for leakage of refrigerant.

If there is leakage, check the tightening torque at the joints.

11. INSPECT A/C OPERATION

RECEIVER

AC0MA–01

ON–VEHICLE INSPECTION

INSPECT FITTINGS FOR LEAKAGE

Using a gas leak detector, check for leakage.

If there is leakage, check the tightening torque at the joints.

AC0MB–02

REMOVAL

1. DISCHARGE REFRIGERANT FROM REFRIGERATION SYSTEM

HINT:

At the time of installation, please refer to the following item.

Evacuate air from refrigeration system.

Charge system with refrigerant and inspect for leakage of refrigerant.

Specified amount: 800 ± 50 g (28.22 ± 1.76 oz.)

2. REMOVE RADIATOR UPPER SUPPORT SEAL

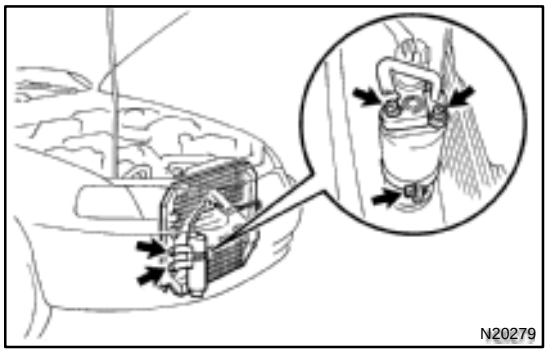

3. DISCONNECT 2 LIQUID TUBES FROM RECEIVER

Remove the 2 bolts and both tubes.

Torque: 5.4 N·m (55 kgf·cm, 48 in.·lbf)

NOTICE:

Cap the open fittings immediately to keep moisture or dirt out of the system.

HINT:

At the time of installation, please refer to the following item.

Lubricate 2 new O–rings with compressor oil and install the tubes.

4. REMOVE RECEIVER

(a) Remove the holder bolt and pull out receiver downward.

HINT:

At the time of installation, please refer to the following item.

If receiver was replaced, add compressor oil to compressor.

Add 20 cc (0.71 fl.oz.)

Compressor oil: ND–OIL 8 or equivalent

(b) Remove the 2 bolts and holder.

AC0MC–01

INSTALLATION

Installation is in the reverse order of removal (See page AC–50).

CONDENSER

AC0MD–01

ON–VEHICLE INSPECTION

1. INSPECT CONDENSER FINS FOR BLOCKAGE OR DAMAGE

- If the fins are clogged, wash them with water and dry with compressed air.

NOTICE:

Be careful not to damage the fins.

- If the fins are bent, straighten them with a screwdriver or pliers.

2. INSPECT CONDENSER AND FITTINGS FOR LEAKAGE

Using a gas leak detector, check for leakage of refrigerant.

If there is leakage, check the tightening torque at the joints.

AC0ME–02

REMOVAL

1. DISCHARGE REFRIGERANT FROM REFRIGERATION SYSTEM

HINT:

At the time of installation, please refer to the following item.

Evacuate air from refrigeration system.

Charge system with refrigerant and inspect for leakage of refrigerant.

Specified amount: 800 ± 50 g (28.22 ± 1.76 oz.)

2. REMOVE UPPER RADIATOR SUPPORTS

3. REMOVE RECEIVER AND HOLDER

(See page AC–50)

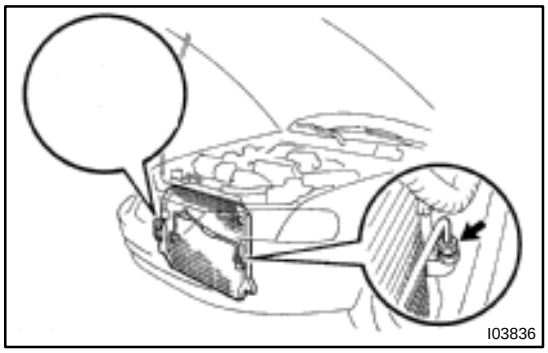

4. DISCONNECT DISCHARGE HOSE

Loosen the nut and disconnect the discharge hose.

Torque: 10 N·m (100 kgf·cm, 7 ft·lbf)

NOTICE:

Cap the open fittings immediately to keep moisture or dirt out of the system.

HINT:

At the time of installation, please refer to the following item.

Lubricate a new O–ring with compressor oil and install the tube.

5. REMOVE LIQUID TUBE

Loosen the nut and remove the liquid tube.

Torque: 14 N·m (140 kgf·cm, 10 ft·lbf)

NOTICE:

Cap the open fittings immediately to keep moisture or dirt out of the system.

HINT:

At the time of installation, please refer to the following item.

Lubricate a new O–ring with compressor oil and install the tube.

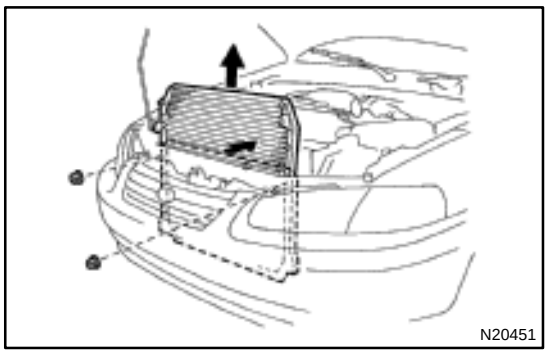

6. REMOVE CONDENSER

(a) Remove the 2 nuts from condenser upper mountings.
(b) Push the radiator toward the engine.
(c) Push the condenser toward the radiator and pull it upward.

HINT:

At the time of installation, please refer to the following item.

If condenser is replaced, add compressor oil to the compressor.

Add 40–50 cc (1.4–1.7 fl.oz.)
Compressor oil: ND–OIL 8 or equivalent

AC0MF–01

INSTALLATION

Installation is in the reverse order of removal (See page AC–53).

HEATER RADIATOR

AC21Z–01

REMOVAL

1. DRAIN ENGINE COOLANT FROM RADIATOR

HINT:

It is not necessary to drain out all the coolant.

2. DISCONNECT WATER HOSES FROM A/C UNIT (See page AC–27)

3. REMOVE NO. 1 LOWER INSTRUMENT PANEL

4. REMOVE LH INSTRUMENT LOWER PANEL

5. REMOVE HEATER RADIATOR

(a) Release the 3 claws and pull out the heater protector.

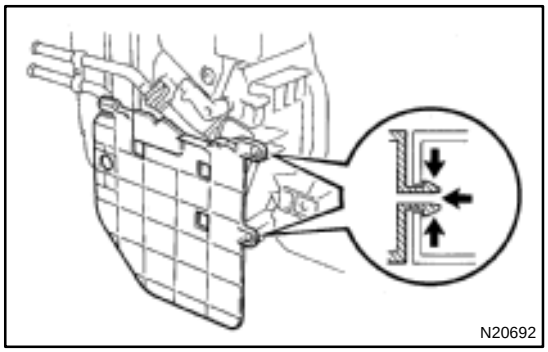
N20692

(b) Remove the 3 screws 3 plate.

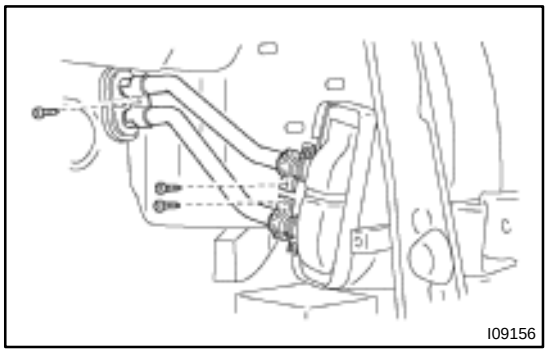
I09156

(c) Remove the 2 screws and 2 clamps and disconnect the 2 heater radiator pipes.

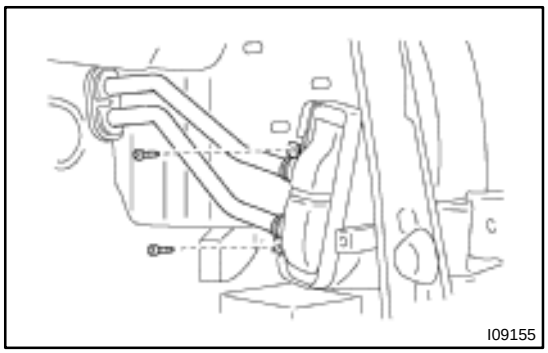
I09155

(d) Remove the heater radiator.

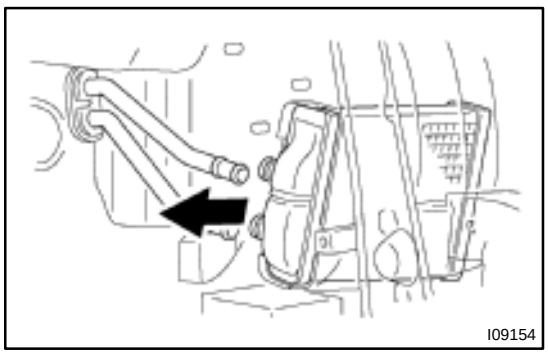
I09154

AC0MK–01

INSPECTION

INSPECT FINS FOR BLOCKAGE

If the fins are clogged, clean them with compressed air.

AC0ML–01

INSTALLATION

Installation is in the reverse order of removal (See page AC–56).

EXPANSION VALVE

AC0MM–02

ON–VEHICLE INSPECTION

1. CHECK QUANTITY OF GAS DURING REFRIGERATION CYCLE

2. SET ON MANIFOLD GAUGE SET (See page AC–19)

3. RUN ENGINE

Run the engine at 1,500 rpm for at least 5 minutes.

Then check that the high pressure reading is 1.37 – 1.57 MPa (14 – 16 kgf/cm^2, 199 – 228 psi).

4. CHECK EXPANSION VALVE

If the expansion valve is faulty, the low pressure reading will drop to 0 kPa (0 kgf/cm^2, 0 psi).

HINT:

When the low pressure drops to 0 kPa (0 kgf/cm^2, 0 psi), check the receiver's IN and OUT sides is no temperature difference.

AC220–01

REMOVAL

1. **DISCHARGE REFRIGERANT FROM REFRIGERATION SYSTEM**
2. **DISCONNECT LIQUID AND SUCTION TUBES FROM A/C UNIT (See page AC–27)**
3. **REMOVE BLOWER UNIT (See page AC–35)**

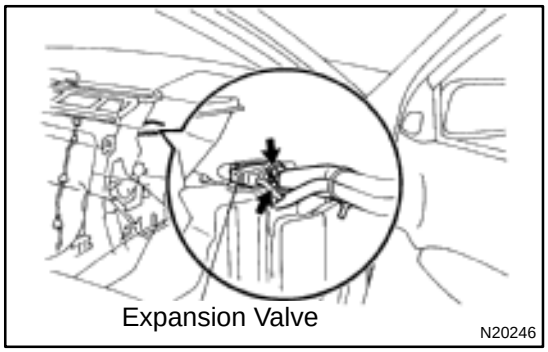
Expansion Valve
N20246

4. **REMOVE EXPANSION VALVE**

(a) Remove the piping clamp.

(b) Ply out the packing.

HINT:

Do not reuse the packing.

(c) Using a hexagon wrench, remove the 2 bolts and separate the expansion valve and evaporator.

AC0MO–02

INSTALLATION

1. INSTALL LIQUID TUBE AND SUCTION TUBE TO EXPANSION VALVE

HINT:

Lubricate 4 new O–rings with compressor oil and install the tubes.

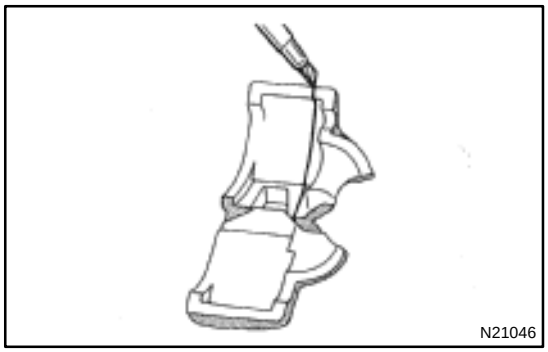
N21046

2. INSTALL NEW PACKING ON EXPANSION VALVE

(a) Cut off packing paper and peel off the packing paper, as shown in the illustration.

HINT:

Leave the packing paper untaped on the tube side so that the installing bolt hole for remains visible.

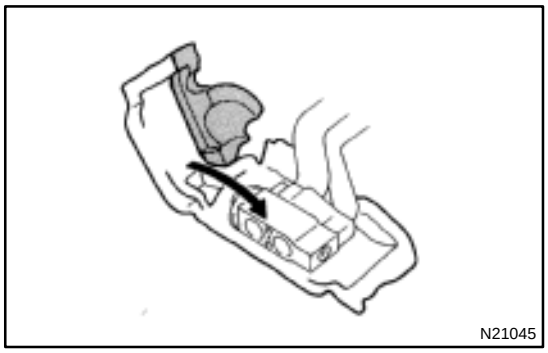
N21045

(b) Apply the packing on the expansion valve.

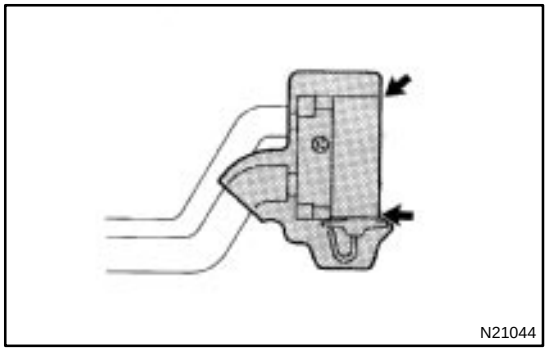
N21044

NOTICE:

Do not overtape the packing beyond the expansion valve edge.

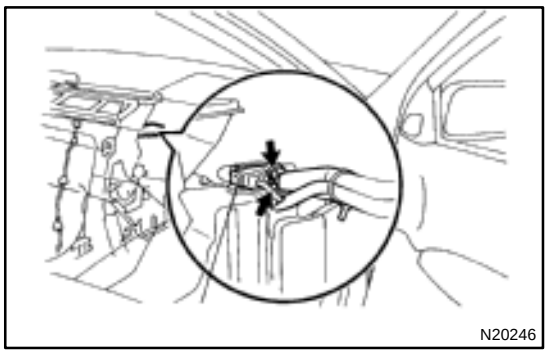

3. INSTALL EXPANSION VALVE

(a) Install the expnaion valve with the 2 bolts.
Torque: 5.4 N·m (55 kgf·cm, 48 in.·lbf)

NOTICE:

When installing the expansion valve, take care so that the packing is not jammed with the evaporator.

HINT:

Lubricate 2 new O–rings with compressor oil and install O–rings on the expansion valve.

(b) Peel off the remaing packing paper and apply the packing to expansion valve.

4. INSTALL BLOWER UNIT (See page AC–38)

5. INSTALL GLOVE COMPARTMENT (See page BO–81)

6. CONNECT LIQUID TUBE AND SUCTION TUBES TO A/C UNIT (See page AC–33)

7. EVACUATE AIR FROM REFRIGERATION SYSTEM AND CHARGE SYSTEM WITH REFRIGERANT
Specified amount: 800 ± 50 g (28.22 ± 1.76 oz.)

8. INSPECT FOR LEAKAGE OF REFRIGERANT

Using a gas leak detector, check for leakage of refrigerant.
If there is leakage, check the tightning torque at the joints.

BLOWER MOTOR

AC221–01

INSPECTION

1. REMOVE GLOVE COMPARTMENT
(See page BO–75)

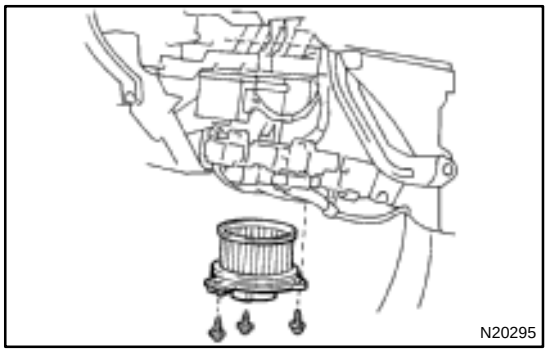

2. REMOVE BLOWER MOTOR

(a) Disconnect the connector.

(b) Remove the 3 screws and blower motor.

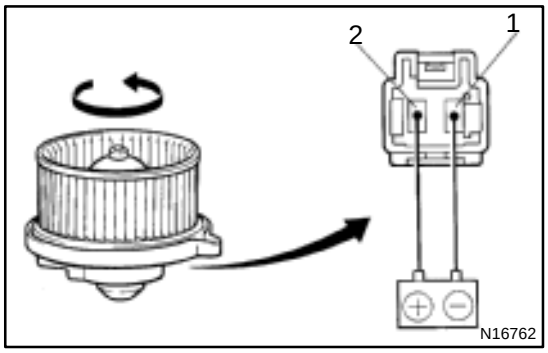

3. INSPECT BLOWER MOTOR OPERATION

Connect the positive (+) lead from the battery to terminal 2 and the negative (–) lead to terminal 1, then check that the motor operations smoothly.

If operation is not as specified, replace the blower motor.

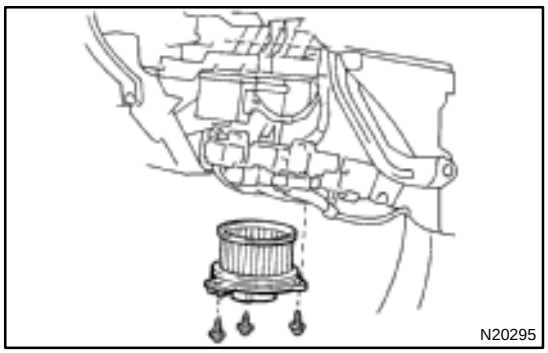

4. INSTALL BLOWER MOTOR

(a) Install the blower motor with the 3 screws.

(b) Connect the connector.

5. INSTALL GLOVE COMPARTMENT
(See page BO–81)

BLOWER RESISTOR

AC222–01

INSPECTION

1. REMOVE GLOVE COMPARTMENT
(See page BO–75)

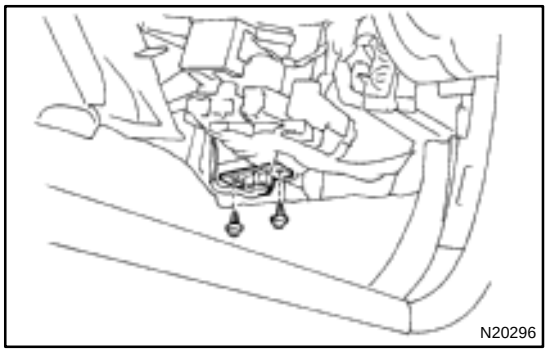

2. REMOVE BLOWER RESISTOR

(a) Disconnect the connector.
(b) Remove the 2 screws and blower resistor.

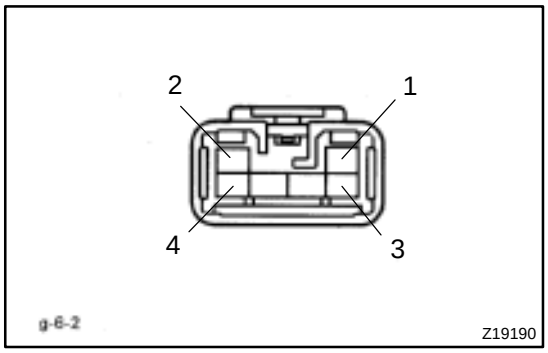

3. INSPECT BLOWER RESISTOR RESISTANCE

Tester connection	Condition	Specified condition
2 – 4	Constant	Approx. 0.38 Ω
2 – 3	Constant	Approx. 1.12 Ω
1 – 3	Constant	Approx. 1.74 Ω

If resistance is not as specified, replace the blower resistor.

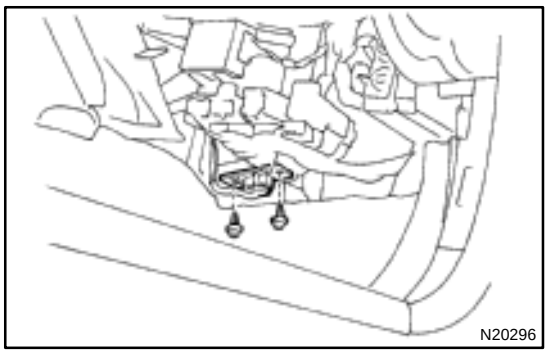

4. INSTALL BLOWER RESISTOR

(a) Install the blower resistor with the 2 screws.
(b) Connect the connector.

5. INSTALL GLOVE COMPARTMENT
(See page BO–81)

AIR OUTLET SERVOMOTOR

AC223–01

INSPECTION

1. **REMOVE NO. 1 LOWER INSTRUMENT PANEL**
2. **REMOVE LH INSTRUMENT LOWER PANEL**
   (See page BO–75)

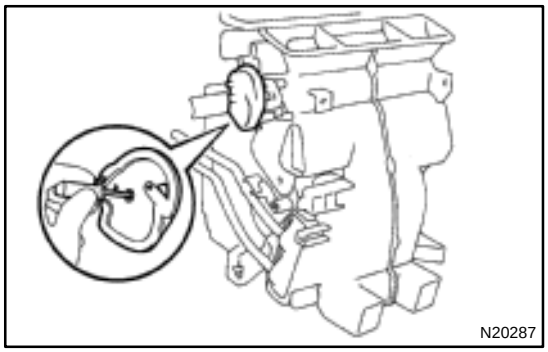

3. **REMOVE SERVOMOTOR**

(a) Release the claw and pull out the plate.



(b) Disconnect the connector.
(c) Remove the 3 screws and servomotor.

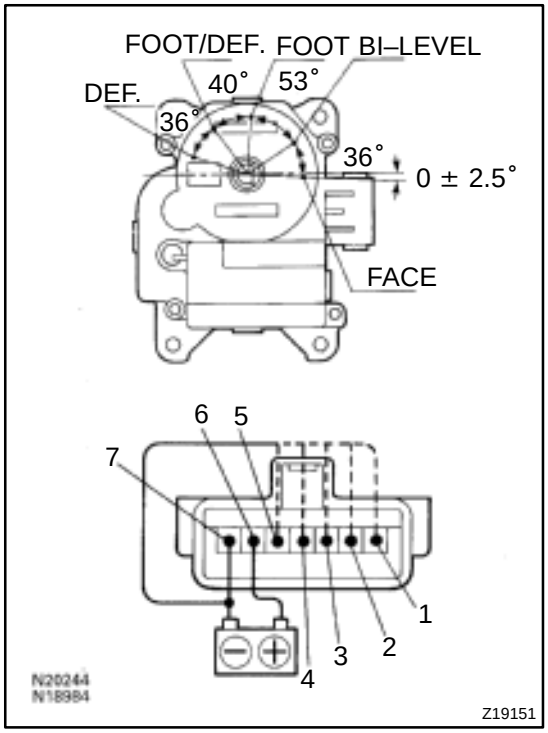

4. **INSPECT SERVOMOTOR OPERATION**

(a) Connect the positive (+) lead from the battery to terminal 6 and the negative (–) lead to terminal 7.
(b) Connect the negative (–) lead from the battery to each terminal and check that the shaft rotates at each position, as shown in the illustration.

Connected terminal	Position
5	DEF.
4	FOOT/DEF.
3	FOOT
2	B/L
1	FACE

If operation is not as specified, replace the servomotor.



5. INSTALL SERVOMOTOR

(a) Install servomotor with the 3 screws.

(b) Connect he connector.

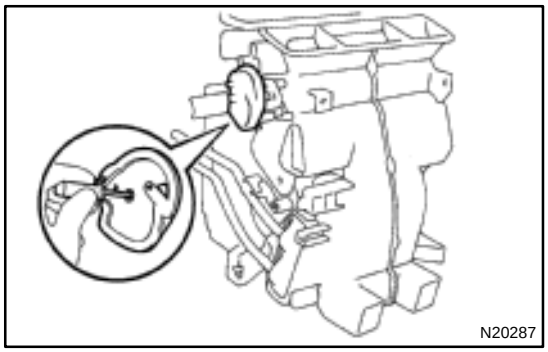

(c) Install the plate, then restraint the claw.

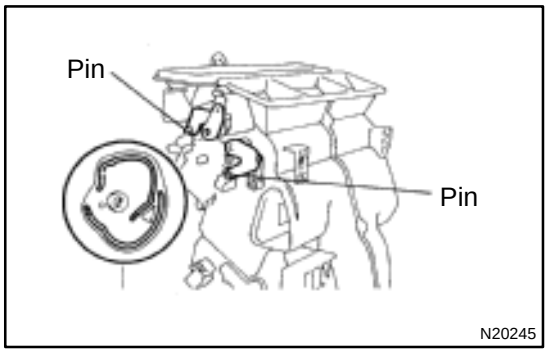

(d) Insert the drain of plate to the lever pin.

6. INSTALL LH INSTRUMENT LOWER PANEL

7. INSTALL NO. 1 LOWER INSTRUMENT PANEL

(See page BO–81)

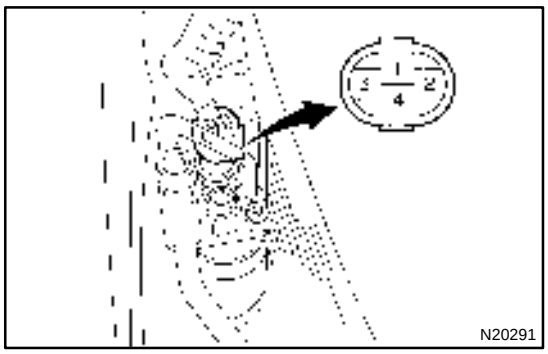

PRESSURE SWITCH

AC0N2–02

ON–VEHICLE INSPECTION

1. **SET ON MANIFOLD GAUGE SET**
   (See page AC–19)
2. **DISCONNECT CONNECTOR FROM PRESSURE SWITCH**
3. **RUN ENGINE AT APPROX. 1,500 RPM**

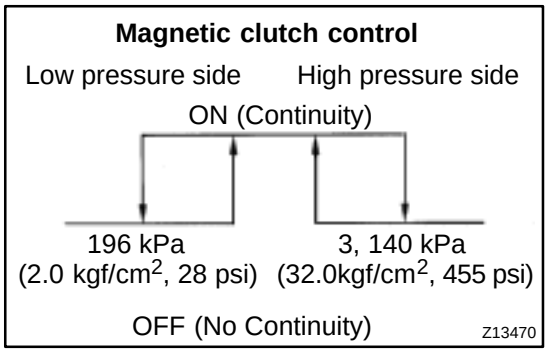

4. **Magnetic clutch control:**
   INSPECT PRESSURE SWITCH OPERATION

(a) Connect the positive (+) lead from the ohmmeter to terminal 4 and negative (–) lead to terminal 1.

(b) Check continuity between terminals when refrigerant pressure is changed, as shown in the illustration.

If operation is not as specified, replace the pressure switch.

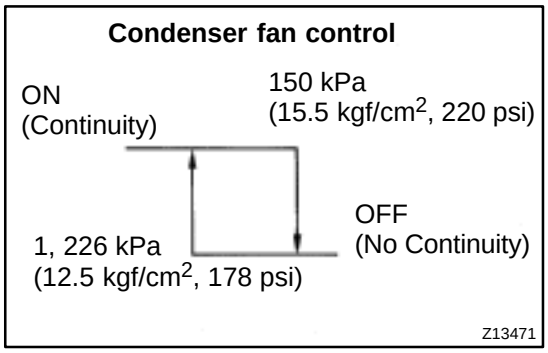

5. **Condenser fan control:**
   INSPECT PRESSURE SWITCH OPERATION

(a) Connect the positive (+) lead from the ohmmeter to terminal 2 and negative (–) lead to terminal 3.

(b) Check continuity between terminals when refrigerant pressure is changed, as shown in the illustration.

If operation is not as specified, replace the pressure switch.

6. **STOP ENGINE AND REMOVE MANIFOLD GAUGE SET**
7. **CONNECT CONNECTOR TO PRESSURE SWITCH**

AC0N3–02

REMOVAL

1. DISCHARGE REFRIGERANT FROM REFRIGERATION SYSTEM

HINT:

At the time of installation, please refer to the following item.

Evacuate air from refrigeration system.

Charge system with refrigerant and inspect for leakage of refrigerant.

Specified amount: 800 ± 50 g (28.22 ± 1.76 oz.)

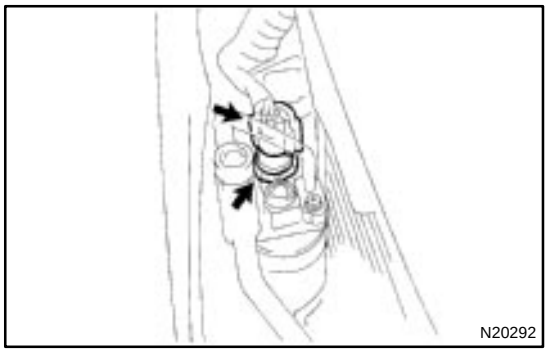

2. REMOVE PRESSURE SWITCH FROM LIQUID TUBE

Disconnect the connector and remove the pressure switch.

Torque: 10 N·m (100 kgf·cm, 7 ft·lbf)

HINT:

- Lock the switch mount on the tube with an open end wrench, being careful not to deform the tube, and remove the switch.
- At the time of installation, please refer to the following item.
  Lubricate a new O–ring with the compressor oil and install the switch.

AC0N4–01

INSTALLATION

Installation is in the reverse order of removal (See page AC–68).

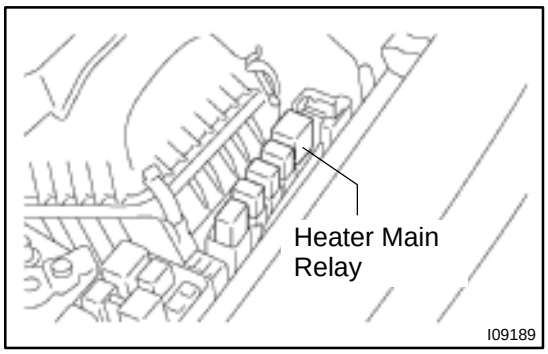

HEATER MAIN RELAY

AC224–01

INSPECTION

1. REMOVE HEATER MAIN RELAY FROM ENGINE ROOM RELAY BLOCK NO. 1

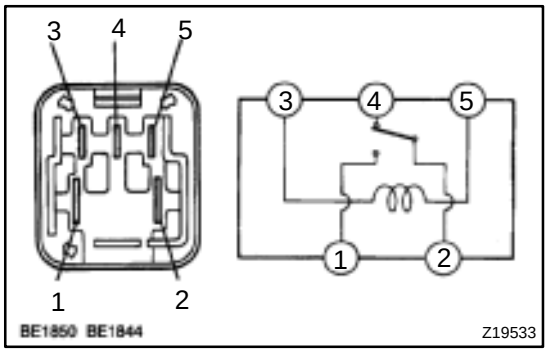

2. INSPECT HEATER MAIN RELAY (Marking: HTR RLY) CONTINUITY

Condition	Tester connection	Specified condition
Constant	1 – 3 2 – 4	Continuity
Apply B+ between terminals 1 and 3.	4 – 5	Continuity

If continuity is not as specified, replace the relay.

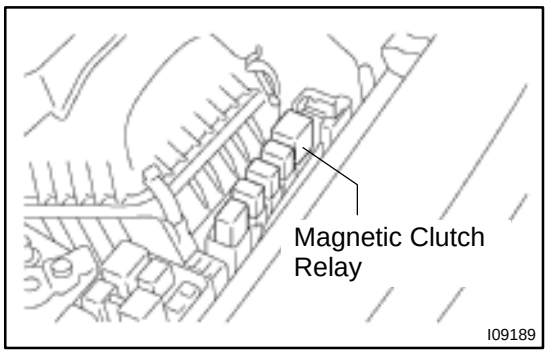

MAGNETIC CLUTCH RELAY

AC225–01

INSPECTION

1. REMOVE MAGNETIC CLUTCH RELAY FROM ENGINE ROOM RELAY BLOCK NO. 1

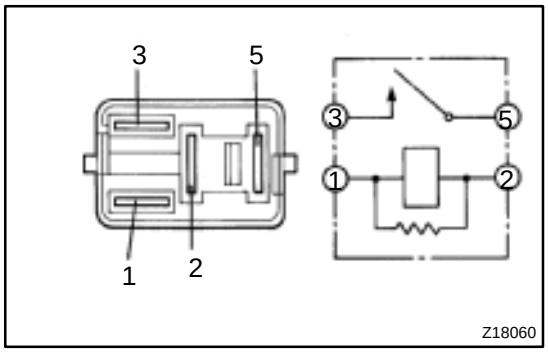

2. INSPECT HEATER MAIN RELAY (Marking: MG CLT RLY) CONTINUITY

Condition	Tester connection	Specified condition
Constant	1 – 2	Continuity
Apply B+ between terminals 1 and 2.	3 – 5	Continuity

If continuity is not as specified, replace the relay.

COOLING FAN RELAY

AC226–01

INSPECTION

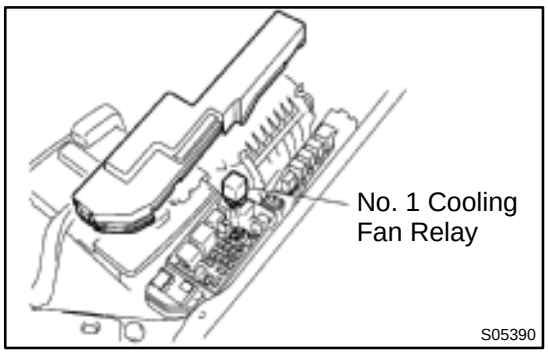

1. REMOVE NO. 1 COOLING FAN RELAY FROM ENGINE ROOM JUNCTION BLOCK NO. 2

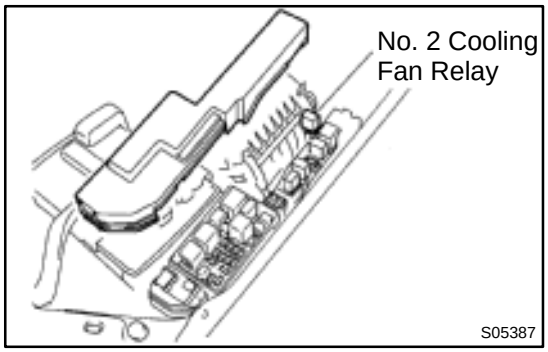

2. REMOVE NO. 2 COOLING FAN RELAY FROM ENGINE ROOM RELAY BLOCK NO. 1

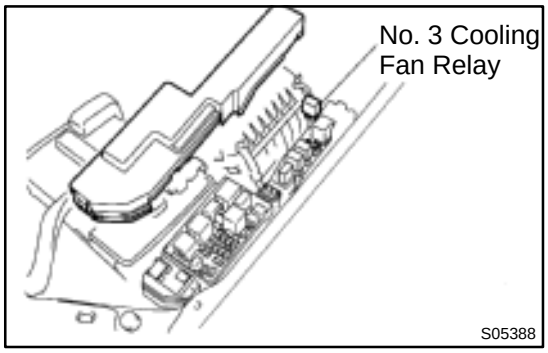

3. REMOVE NO. 3 COOLING FAN RELAY FROM ENGINE ROOM RELAY BLOCK NO. 1

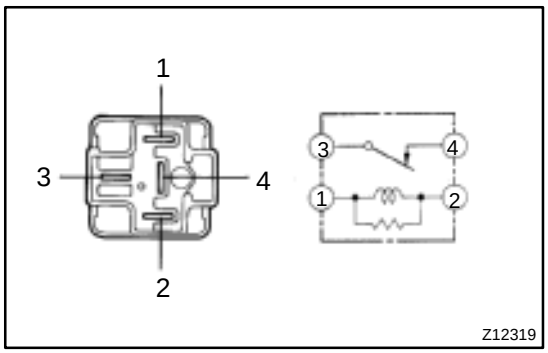

4. INSPECT NO. 1 COOLING FAN RELAY (Marking: FAN RLY NO. 1) CONTINUITY

Condition	Tester connection	Specified condition
Constant	1 – 2 3 – 4	Continuity
Apply B+ between terminals 1 and 2.	3 – 4	Continuity

If continuity is not as specified, replace the relay.

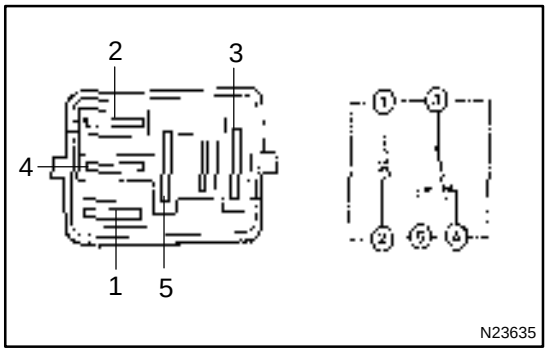

5. INSPECT NO. 2 COOLING FAN RELAY (Marking: FAN RLY NO. 2) CONTINUITY

Condition	Tester connection	Specified condition
Constant	1 – 2 3 – 4	Continuity
Apply B+ between terminals 1 and 2.	3 – 5	Continuity

If continuity is not as specified, replace the relay.

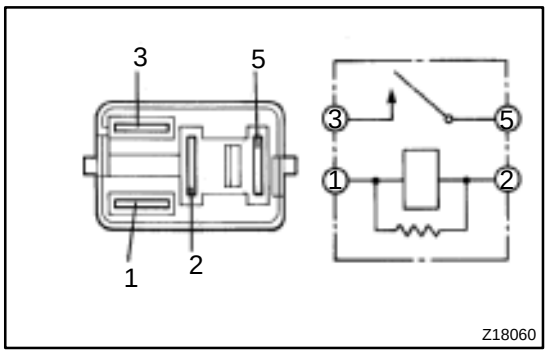

6. INSPECT NO. 3 COOLING FAN RELAY (Marking: FAN RLY NO. 3) CONTINUITY

Condition	Tester connection	Specified condition
Constant	1 – 2	Continuity
Apply B+ between terminals 1 and 2.	3 – 5	Continuity

If continuity is not as specified, replace the relay.

CONDENSER FAN

AC0N6–02

ON–VEHICLE INSPECTION

1. INSPECT CONDENSER FAN OPERATION

Inspect the fan operation, as shown in the chart below.

Test conditions:

- Ignition switch ON
- Blower speed control switch position ”HI”
- A/C switch ON

Condition	Fan operation (Fan speed)
Engine coolant temperature 83˚C (181˚F) or below	Not rotate
Engine coolant temperature 98˚C (208˚F) or above	Rotate
Refrigerant pressure is less than 1,520 kPa (15.5 kgf/cm^2, 220 psi)	Not rotate (Low Speed)
Refrigerant pressure is 1,520 kPa (15.5 kgf/cm^2, 220 psi) or above	Rotate (High Speed)

If operation is not as specified, proceed next inspection.

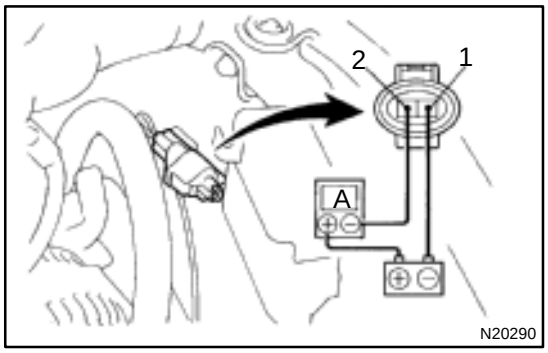

2. INSPECT CONDENSER FAN MOTOR OPERATION

(a) Disconnect the fan connector.

(b) Connect the battery and ammeter to the connector, as shown in the illustation.

(c) Check that the fan rotates smoothly, and then check that the reading on the ammeter.

Specified amperage: 10.1 ± 1.8 A at 20 ˚C (68 ˚F)

- If operation is not as specified, replace the fan motor.
- If operation is as specified, check the pressure switch, cooling fan relays and engine coolant temp. switch.

AC0N7–02

COMPONENTS

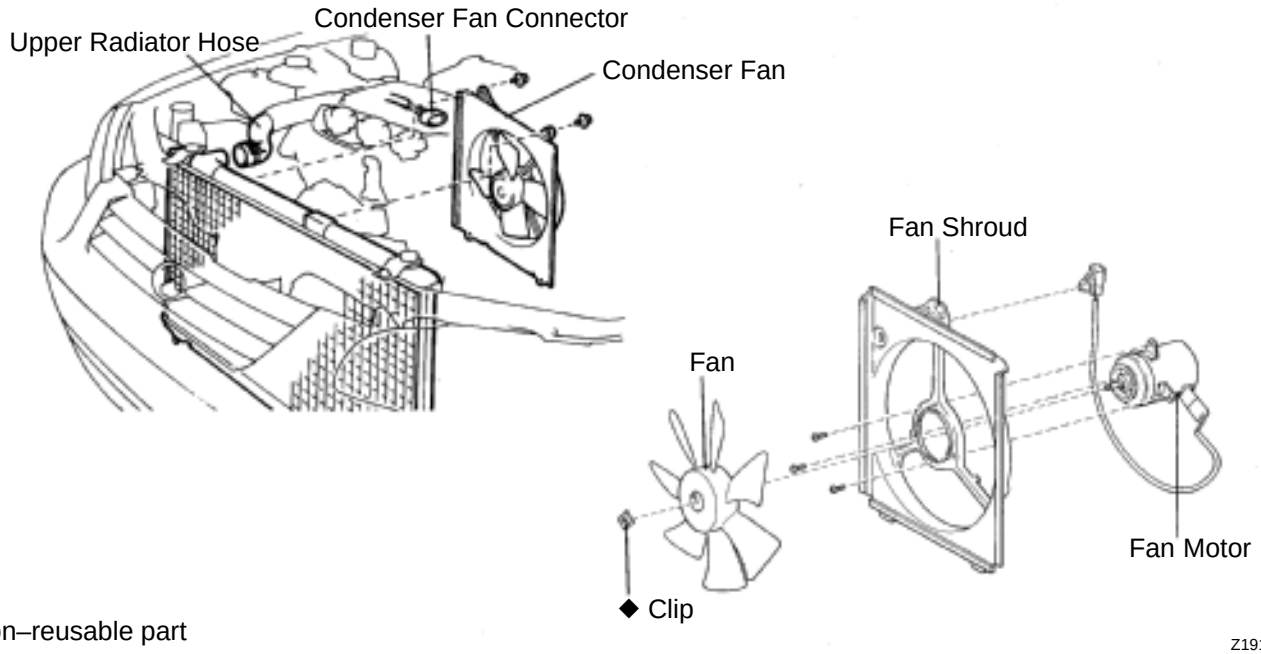

N20260
N20262
◆ Non–reusable part

Z19147

AC0N8–02

REMOVAL

1. 1MZ–FE engine models only:
DRAIN ENGINE COOLANT FROM RADIATOR

HINT:

It is not necessary to drain out all the coolant.

2. 1MZ–FE engine models only:
DISCONNECT UPPER RADIATOR HOSE

3. REMOVE CONDENSER FAN

(a) Disconnect the connector.

(b) Remove the 4 bolts and fan.

AC0N9–02

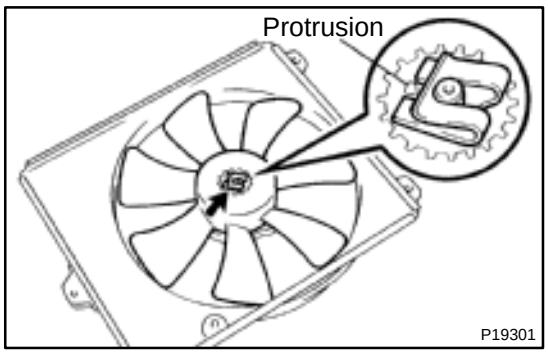

DISASSEMBLY

1. REMOVE FAN

Remove the clip and fan.

NOTICE:

When removing the clip and fan, do not apply too much force to the motor shaft. And do not scratch the motor shaft.

HINT:

Install a new clip from the side opposite the protrusion on the fan.

2. REMOVE FAN MOTOR

(a) Disconnect the lead wire from the fan shroud.

(b) Remove the 3 screws and fan motor.

AC0NA–01

REASSEMBLY

Reassembly is in the reverse order of disassembly (See page AC–77).

AC0NB–01

INSTALLATION

Installation is in the reverse order of removal (See page AC–76).

AIR CONDITIONING CONTROL ASSEMBLY

AC0NC–01

ON–VEHICLE INSPECTION

INSPECT A/C CONTROL DIAL AND LEVER OPERATION

Move the control dial and lever left and right and check for stiffness and binding through the full range of the levers.

AC0ND–02

COMPONENTS

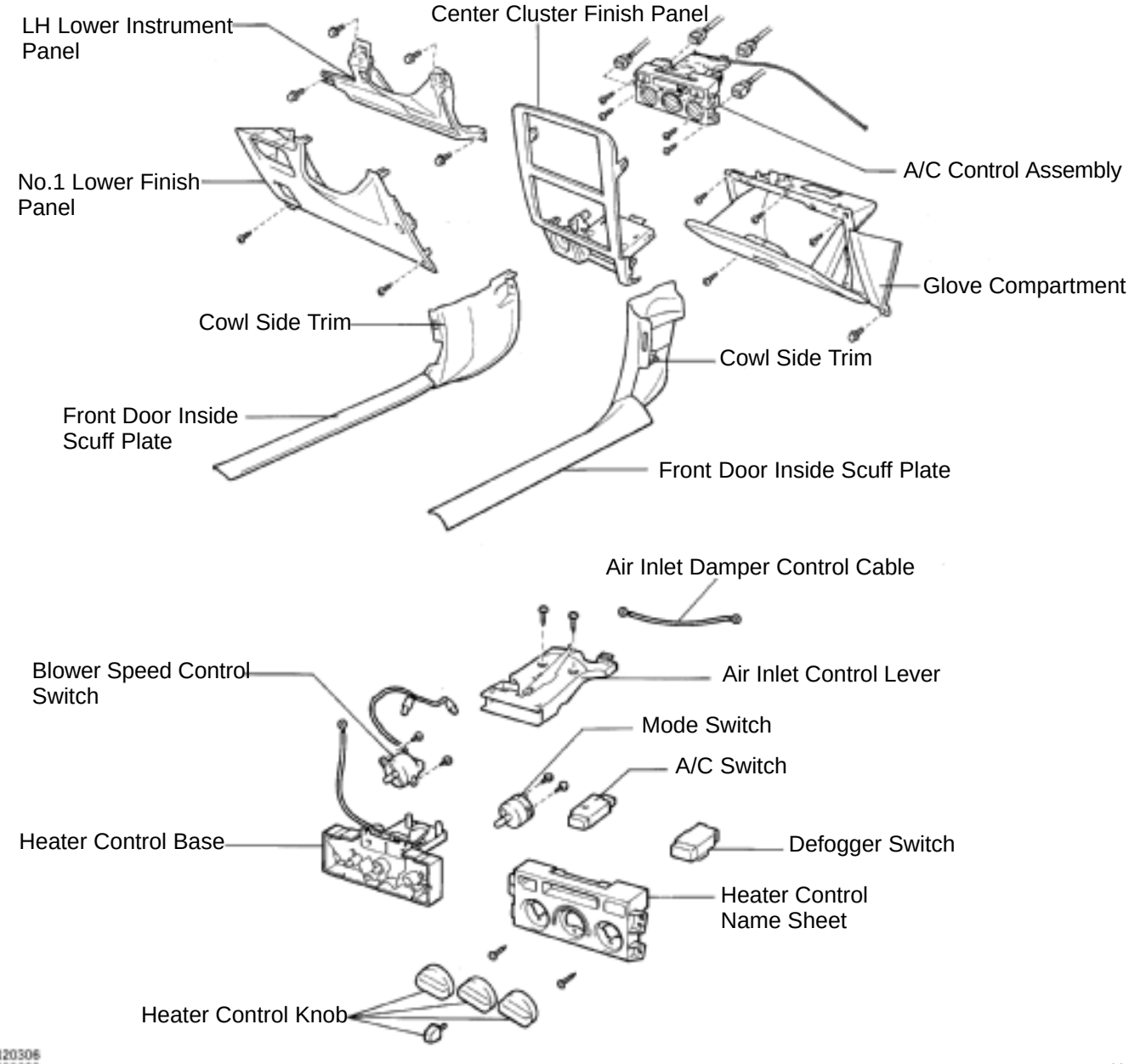

AC0NE–02

REMOVAL

1. REMOVE COWL SIDE TRIM LH AND RH
2. REMOVE FRONT DOOR INSIDE SCUFF PLATE LH AND RH
3. REMOVE NO. 2 LOWER COVER
4. REMOVE GLOVE COMPARTMENT
5. REMOVE NO. 1 LOWER INSTRUMENT PANEL
6. REMOVE LH LOWER INSTRUMENT PANEL
7. REMOVE CENTER CLUSTER FINISH PANEL
8. DISCONNECT A/C CONTROL CABLES

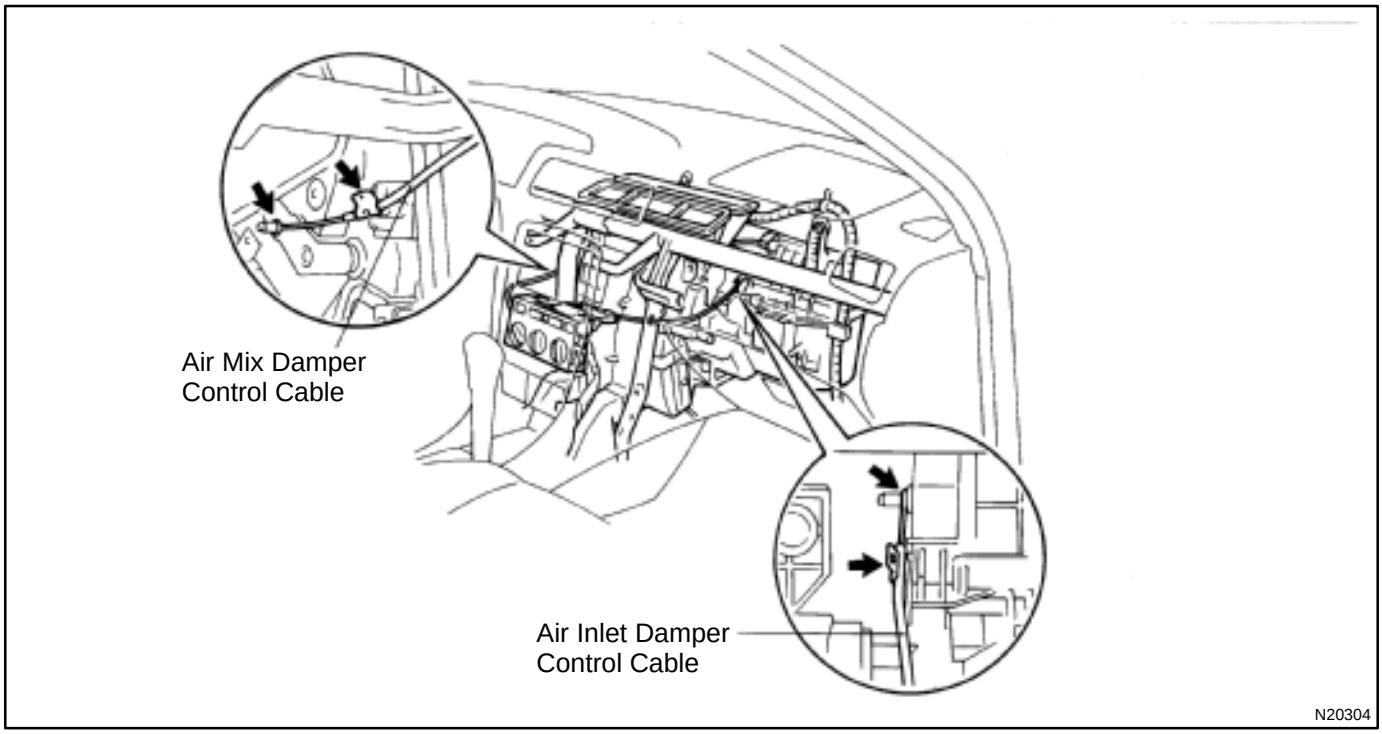

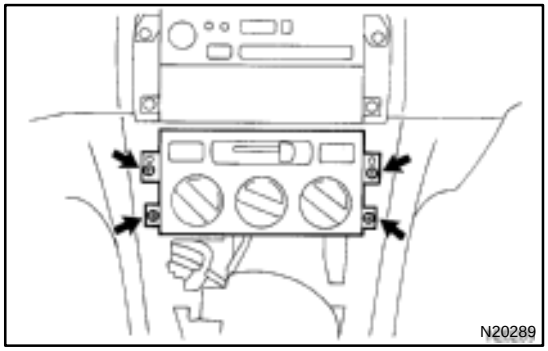

9. REMOVE A/C CONTROL ASSEMBLY

Remove the 4 screws and pull out the A/C control assembly, then disconnect the connector.

AC0NF–02

DISASSEMBLY

1. REMOVE A/C SWITCH AND DEFOGGER SWITCH

Using a screwdriver, release the claw and pull out the switch backward.

HINT:

Tape the screwdriver tip before use.

2. REMOVE HEATER CONTROL KNOBS

3. REMOVE HEATER CONTROL CABLE

4. REMOVE BLOWER SPEED CONTROL SWITCH

Remove the 2 screws and pull out the switch.

5. REMOVE MODE SWITCH

Remove the 2 screws and pull out the switch.

6. REMOVE HEATER CONTROL NAME SHEET

(a) Remove the 2 screws.

(b) Using a screwdriver, release the 4 claws and heater control name sheet.

HINT:

Tape the screwdriver tip before use.

AC0NG–02

INSPECTION

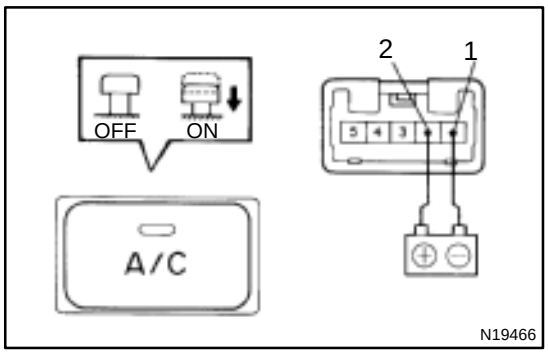

1. INSPECT A/C INDICATOR OPERATION

(a) Connect the positive (+) lead from the battery to terminal 2 and the negative (–) lead to terminal 1.

(b) Push the A/C button in and then check that the indicator lights up.

If operation is not as specified, replace the switch.

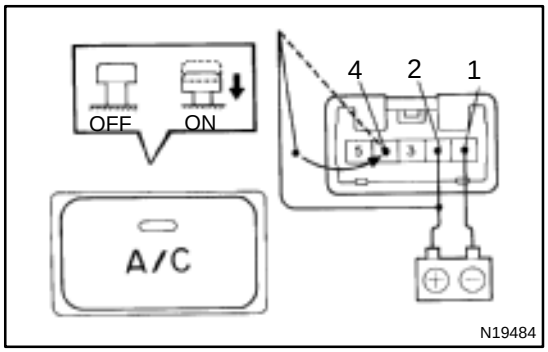

2. INSPECT DIMMING OPERATION

(a) Connect the positive (+) lead from the battery to terminal 2 and the negative (–) lead to terminal 1 while press the switch.

(b) Connect the positive (+) lead from battery to terminal 4 and then check that the indicator dims.

If operation is not as specified, replace the switch.

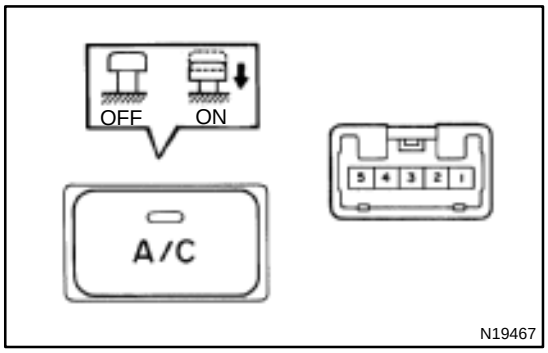

3. INSPECT A/C SWITCH CONTINUITY

Condition/ Circuit	Tester connection	Specified condition
OFF	–	No continuity
ON	2 – 5	Continuity
Illumination circuit	3 – 4	Continuity

- Switch continuity:
  If continuity is not as specified, replace the switch.
- Illumination circuit:
  If continuity is not as specified, replace the bulb.

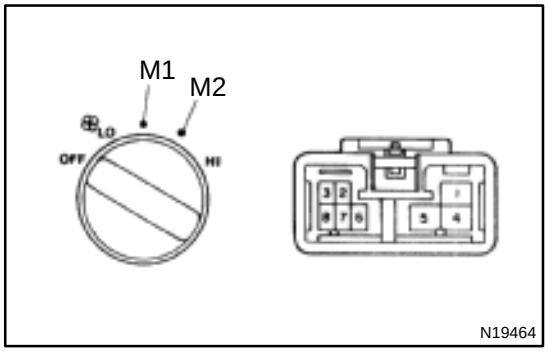

4. INSPECT BLOWER SPEED CONTROL SWITCH CONTINUITY

Position/ Circuit	Tester connection	Specified condition
OFF	–	No continuity
LO	1 – 3	Continuity
M1	1 – 3 – 4	Continuity
M2	1 – 3 – 8	Continuity
HI	1 – 3 – 5	Continuity
Illumination circuit	6 – 7	Continuity

If continuity is not as specified, replace the switch.

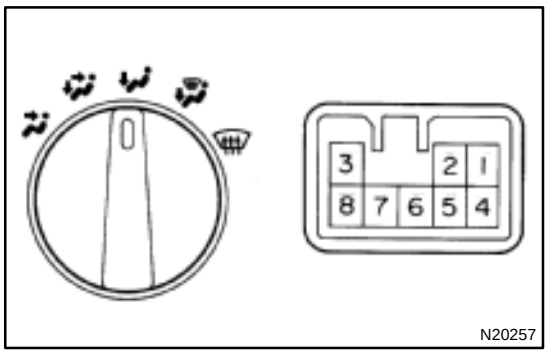

5. INSPECT MODE SWITCH CONTINUITY

Switch position	Tester connection	Specified condition
FACE	1 – 6	Continuity
B/L	1 – 5	Continuity
FOOT	1 – 4	Continuity
FOOT/DEF.	1 – 3	Continuity
DEF.	1 – 2 7 – 8	Continuity

If continuity is not as specified, replace the switch.

6. INSPECT REAR DEFOGGER SWITCH OPERATION (See page BE–56)

AC0NH–01

REASSEMBLY

Reassembly is in the reverse order of disassembly (See page AC–83).

AC0NI–02

INSTALLATION

Installation is in the reverse order of removal
(See page AC–82).

1. AFTER INSTALLATION INSPECT A/C CONTROL LEVER AND DIAL OPERATION

Move the control dial and lever left and right and check fro stiffness and binding through the full range of the lever and dial.
If there is stiffness or binding, proceed next step.

2. ADJUST A/C CONTROL CABLES

(a) Set A/C control assembly in these conditions:
  (1) Air inlet control lever in ”FRESH” position
  (2) Temperature control dial in ”MAX. COOL” position.

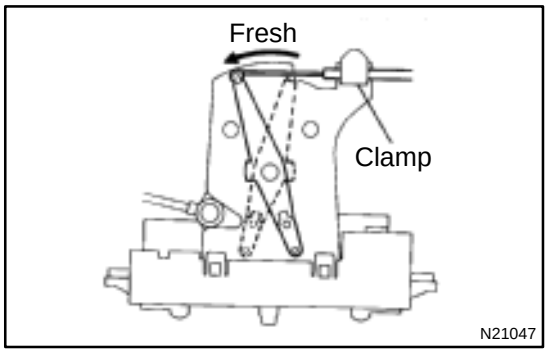

(b) Adjust air inlet control cable.
  (1) Pull out the inner of air inlet cable and hit the link of blower unit on the link stopper.
  (2) Set the cable connector to lever pin and clamp the cable outer.

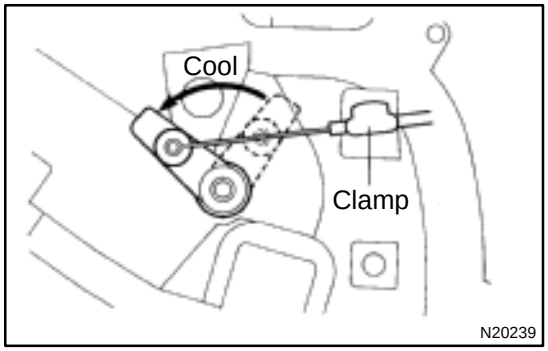

(c) Adjust air mix control cable.
Set the cable connector to air mix link pin on left side of A/C unit and clamp the cable outer on.

AIR CONDITIONING AMPLIFIER

ACONJ–02

ON–VEHICLE INSPECTION

1. REMOVE GLOVE COMPARTMENT

(See page BO–75)

Wire harness side:



Z13472

2. INSPECT AMPLIFIER CIRCUIT

(a) Disconnect the amplifier connector and inspect the connector on wire harness side, as shown in the chart below.
Test conditions:

- Ignition switch ON
- Blower speed switch HI
- Temperature control lever Max. Cool

Tester connection	Condition	Specified condition
5 – Ground	Constant	Continuity
9 – 13	Evaporator temperature at 25˚C (77˚F)	Approx. 1.5 kΩ
14 – 13	Constant	65 – 125 Ω at 25˚C (77˚F)
8 – Ground	A/C switch ON	Battery positive voltage
8 – Ground	A/C switch OFF	No voltage
8 – Ground	Mode switch DEF. position	Battery positive voltage
10 – Ground	A/C switch ON	Below 4.0 V
10 – Ground	A/C switch OFF	No voltage

If circuit is as specified, try replacing the amplifier with a new one. If the circuit is not as specified, inspect the circuits connected to other parts.

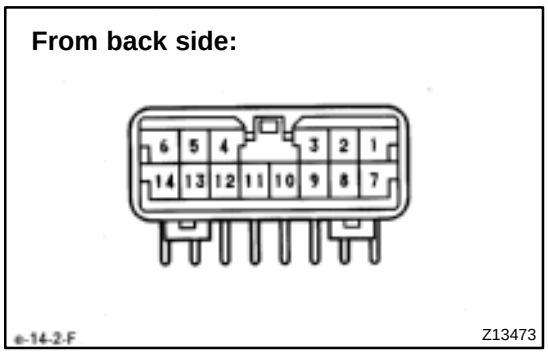

(b) Connect the connector to amplifier and inspect wire harness side connector from the back side, as shown in the chart below.

Test conditions:

- Running engine at idle speed
- Blower speed switch HI
- A/C switch ON
- Temperature control lever Max Cool
- Set on manifold gauge set

Tester connection	Condition	Specified condition
1 – Ground	Magnetic clutch is not engaged	Below 1.0 V
1 – Ground	Magnetic clutch is engaged	No voltage
7 – Ground	Magnetic clutch is not engaged	Below 1.0 V
7 – Ground	Magnetic clutch is engaged	Battery positive voltage
2 – Ground	Refrigerant pressure 196 – 1,340 kPa	Battery positive voltage
2 – Ground	Refrigerant pressure less than 196 or more than 3,140 kPa	No voltage
12 – Ground	Refrigerant pressure 196 – 1,340 kPa	Below 1.0 V
12 – Ground	Refrigerant pressure less than 196 or more than 3,140 kPa	Battery positive voltage
12 – Ground	Engine coolant temp. 83˚C (181˚F) or below	Battery positive voltage
12 – Ground	Engine coolant temp. 93˚C (199˚F) or above	Below 1.0 V

If circuit is as specified, try replacing the amplifier with a new one. If the circuit is not as specified, inspect the circuits connected to other parts.

AC0NK–02

REMOVAL

1. REMOVE GLOVE COMPARTMENT
(See page BO–75)

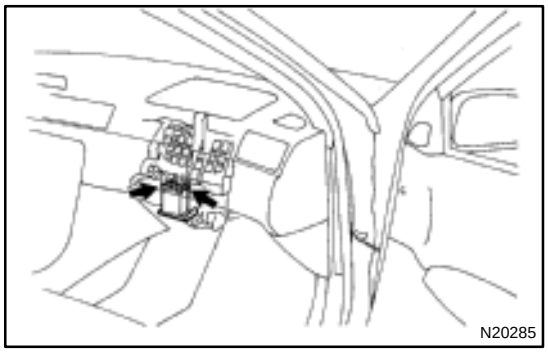

2. REMOVE A/C AMPLIFIER

(a) Disconnect the connector.

(b) Release the 2 claws and pull out the amplifier.

AC0NL–01

INSTALLATION

Installation is in the reverse order of removal (See page AC–90).

ENGINE COOLANT TEMPERATURE (ECT) SWITCH

AC227–01

INSPECTION

1. DRAIN ENGINE COOLANT FROM RADIATOR

HINT:

It is not necessary to drain out all the coolant.

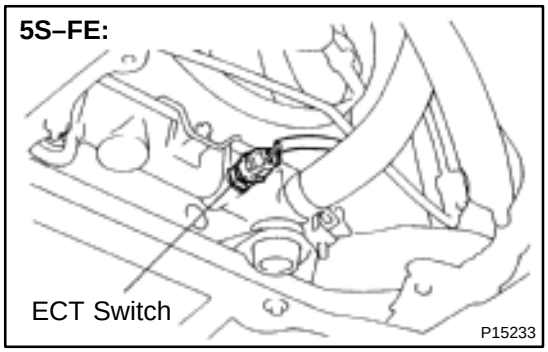

2. REMOVE ECT SWITCHES

(a) Disconnect the connector.

(b) Remove the ECT switch.

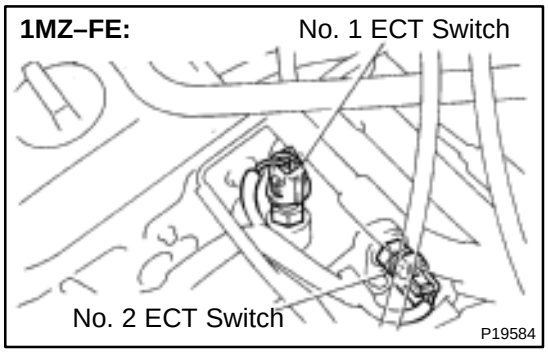

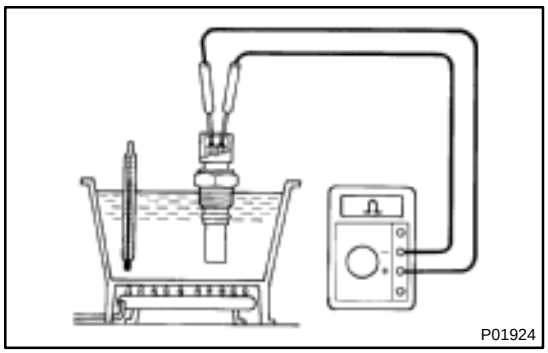

3. 5S–FE engine:
INSPECT ECT SWITCH CONTINUITY

(a) Using an ohmmeter, check that no continuity exists between the terminals when the coolant temperature is above 93˚C (199˚F).

If continuity exists, replace the switch.

(b) Using an ohmmeter, check that continuity exists between the terminals when the coolant temperature is below 83˚C (181˚F).

If no continuity exists, replace the switch.

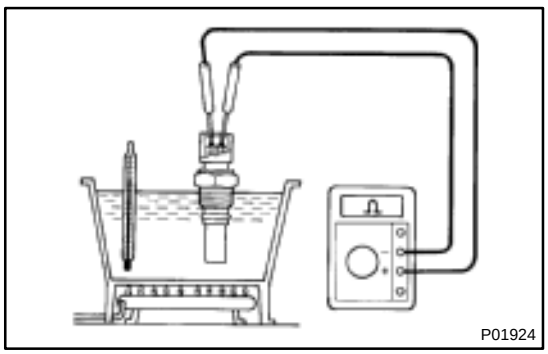

4. 1MZ–FE engine:
INSPECT No. 1 SWITCH CONTINUITY

(a) Using an ohmmeter, check that no continuity exists between the terminals when the coolant temperature is above 98˚C (208˚F).

If continuity exists, replace the switch.

(b) Using an ohmmeter, check that continuity exists between the terminals when the coolant temperature is below 88˚C (190˚F).

If no continuity exists, replace the switch.

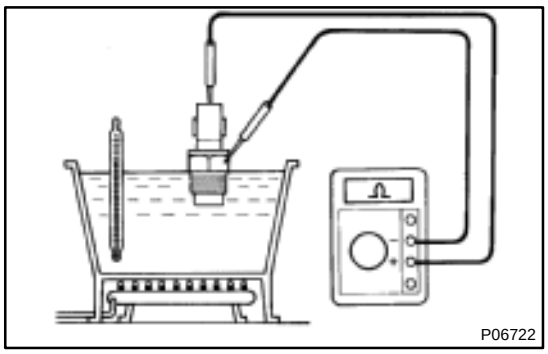

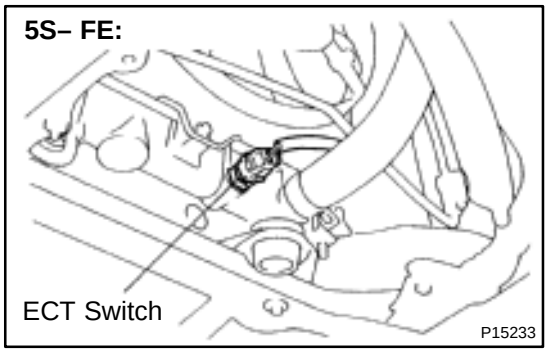

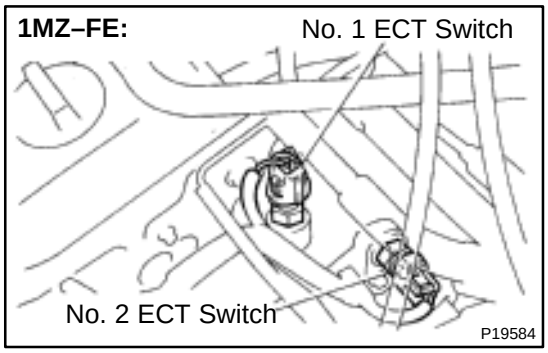

5. 1MZ–FE engine:
INSPECT No. 2 SWITCH CONTINUITY

(a) Using an ohmmeter, check that no continuity exists between the terminal and switch body when the coolant temperature is above 93˚C (199˚F).

If continuity exists, replace the switch.

(b) Using an ohmmeter, check that continuity exists between the terminals when the coolant temperature is below 83˚C (181˚F).

If no continuity exists, replace the switch.

6. INSTALL ECT SWITCHES

(a) Install the ECT switch.

HINT:

Lubricate a new O–ring with soapy water and install the switch.

(b) Connect the connector.

HOW TO USE THIS MANUAL

IN002–0W

To assist you in finding your way through the manual, the Section Title and major heading are given at the top of every page.

PREPARATION

Preparation lists the SST (Special Service Tools), recommended tools, equipment, lubricant and SSM (Special Service Materials) which should be prepared before beginning the operation and explains the purpose of each one.

REPAIR PROCEDURES

Most repair operations begin with an overview illustration. It identifies the components and shows how the parts fit together.

Example:

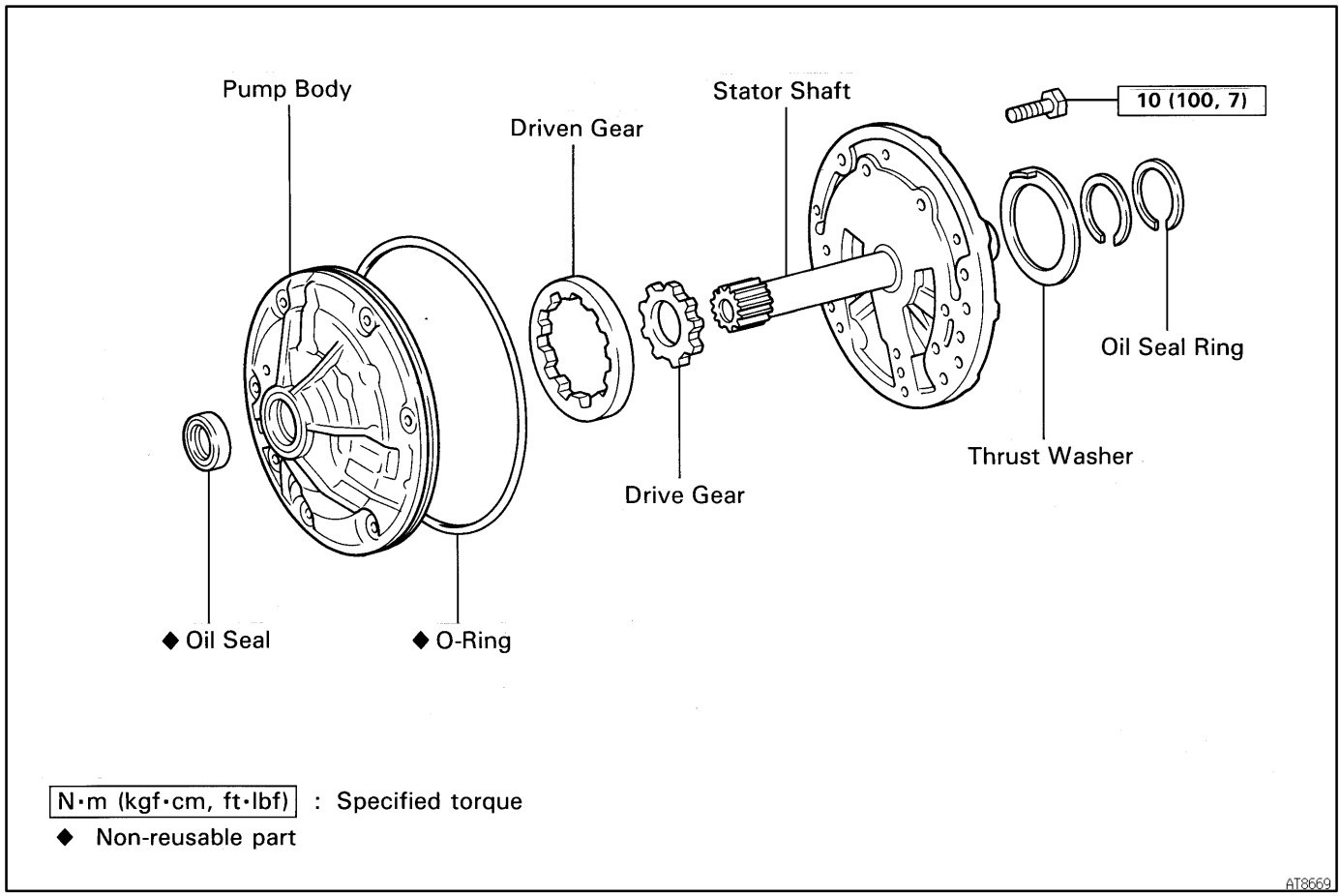

The procedures are presented in a step–by–step format:

- The illustration shows what to do and where to do it.
- The task heading tells what to do.
- The detailed text tells how to perform the task and gives other information such as specifications and warnings.

Example:

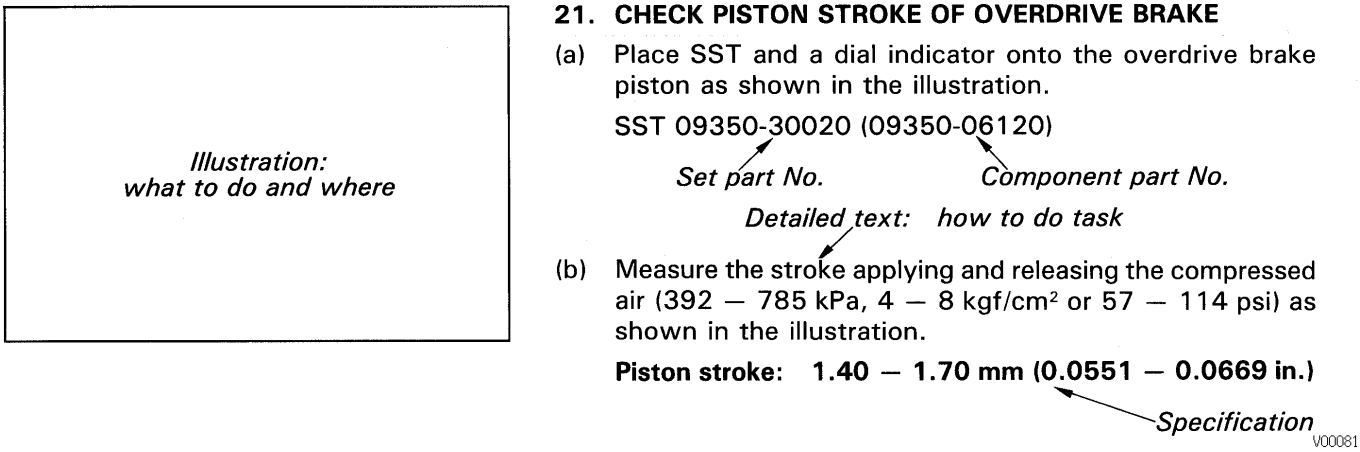

This format provides the experienced technician with a FAST TRACK to the information needed. The upper case task heading can be read at a glance when necessary, and the text below it provides detailed information. Important specifications and warnings always stand out in bold type.

REFERENCES

References have been kept to a minimum. However, when they are required you are given the page to refer to.

SPECIFICATIONS

Specifications are presented in bold type throughout the text where needed. You never have to leave the procedure to look up your specifications. They are also found at the back of AX section, for quick reference.

CAUTIONS, NOTICES, HINTS:

- CAUTIONS are presented in bold type, and indicate there is a possibility of injury to you or other people.
- NOTICES are also presented in bold type, and indicate the possibility of damage to the components being repaired.
- HINTS are separated from the text but do not appear in bold. They provide additional information to help you perform the repair efficiently.

SI UNIT

The UNITS given in this manual are primarily expressed according to the SI UNIT (International System of Unit), and alternately expressed in the metric system and in the English system.

Example:

Torque: 30 N·m (310 kgf·cm, 22 ft·lbf)

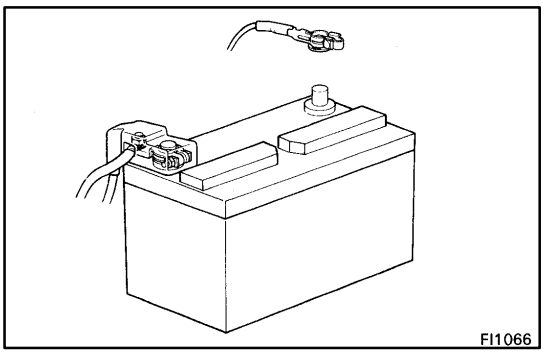
FI1066

GENERAL REPAIR INSTRUCTIONS

IN022–07

1. Use fender, seat and floor covers to keep the vehicle clean and prevent damage.
2. During disassembly, keep parts in the appropriate order to facilitate reassembly.
3. Observe the following:
   (a) Before performing electrical work, disconnect the negative (–) terminal cable from the battery.
   (b) If it is necessary to disconnect the battery for inspection or repair, always disconnect the cable from the negative (–) terminal which is grounded to the vehicle body.
   (c) To prevent damage to the battery terminal post, loosen the terminal nut and raise the cable straight up without twisting or prying it.
   (d) Clean the battery terminal posts and cable terminals with a clean shop rag. Do not scrape them with a file or other abrasive objects.
   (e) Install the cable terminal to the battery post with the nut loose, and tighten the nut after installation. Do not use a hammer to tap the terminal onto the post.
   (f) Be sure the cover for the positive (+) terminal is properly in place.
4. Check hose and wiring connectors to make sure that they are secure and correct.
5. Non–reusable parts
   (a) Always replace cotter pins, gaskets, O–rings and oil seals etc. with new ones.
   (b) Non–reusable parts are indicated in the component illustrations by the "◆" symbol.

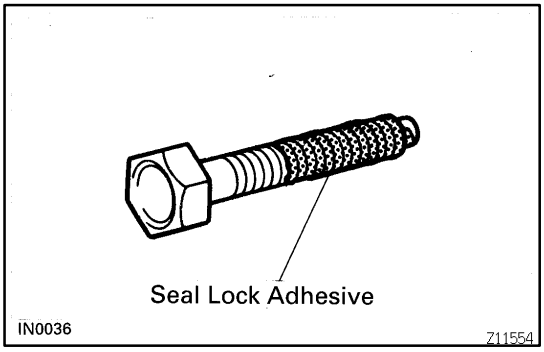

IN0036
Z11554

6. Precoated parts
   Precoated parts are bolts and nuts, etc. that are coated with a seal lock adhesive at the factory.
   (a) If a precoated part is retightened, loosened or caused to move in any way, it must be recoated with the specified adhesive.
   (b) When reusing precoated parts, clean off the old adhesive and dry with compressed air. Then apply

the specified seal lock adhesive to the bolt, nut or threads.

(c) Precoated parts are indicated in the component illustrations by the "• " symbol.

7. When necessary, use a sealer on gaskets to prevent leaks.
8. Carefully observe all specifications for bolt tightening torques. Always use a torque wrench.
9. Use of special service tools (SST) and special service materials (SSM) may be required, depending on the nature of the repair. Be sure to use SST and SSM where specified and follow the proper work procedure. A list of SST and SSM can be found at the preparation of AX section.

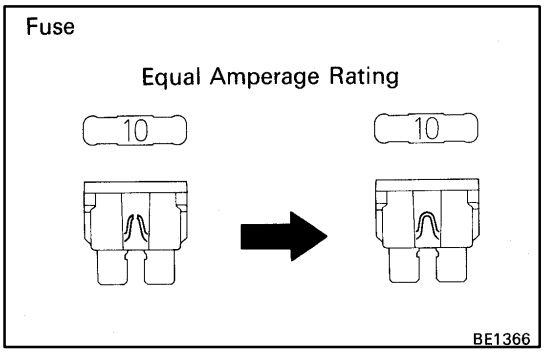

10. When replacing fuses, be sure the new fuse has the correct amperage rating. DO NOT exceed the rating or use one with a lower rating.

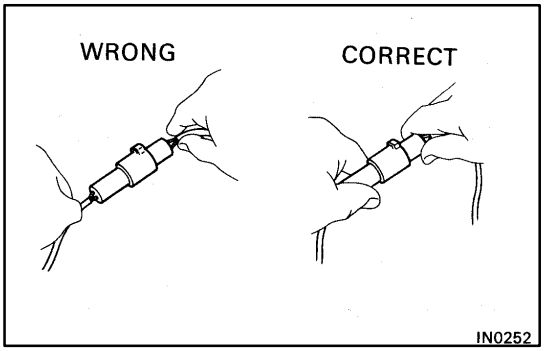

11. To pull apart electrical connectors, pull on the connector itself, not the wires.
12. Care must be taken when jacking up and supporting the vehicle. Be sure to lift and support the vehicle at the proper locations.
    (a) If the vehicle is to be jacked up only at the front or rear end, be sure to block the wheels at the opposite end in order to ensure safety.
    (b) After the vehicle is jacked up, be sure to support it on stands. It is extremely dangerous to do any work on a vehicle raised on a jack alone, even for a small job that can be finished quickly.

GLOSSARY OF SAE AND TOYOTA TERMS

IN016–02

This glossary lists all SAE–J1930 terms and abbreviations used in this manual in compliance with SAE recommendations, as well as their Toyota equivalents.

SAE ABBREVIATIONS	SAE TERMS	TOYOTA TERMS ( )—ABBREVIATIONS
A/C	Air Conditioning	Air Conditioner
ACL	Air Cleaner	Air Cleaner
AIR	Secondary Air Injection	Air Injection (AI)
AP	Accelerator Pedal	–
B+	Battery Positive Voltage	+B, Battery Voltage
BARO	Barometric Pressure	–
CAC	Charge Air Cooler	Intercooler
CARB	Carburetor	Carburetor
CFI	Continuous Fuel Injection	–
CKP	Crankshaft Position	Crank Angle
CL	Closed Loop	Closed Loop
CMP	Camshaft Position	Cam Angle
CPP	Clutch Pedal Position	–
CTOX	Continuous Trap Oxidizer	–
CTP	Closed Throttle Position	–
DFI	Direct Fuel Injection (Diesel)	Direct Injection (DI)
DI	Distributor Ignition	–
DLC1 DLC2 DLC3	Data Link Connector 1 Data Link Connector 2 Data Link Connector 3	1: Check Connector 2: Toyota Diagnosis Communication Link (TDCL) 3: OBD@@@@@: [g 2] Diagnostic Connector
DTC	Diagnostic Trouble Code	Diagnostic Code
DTM	Diagnostic Test Mode	–
ECL	Engine Control Level	–
ECM	Engine Control Module	Engine ECU (Electronic Control Unit)
ECT	Engine Coolant Temperature	Coolant Temperature, Water Temperature (THW)
EEPROM	Electrically Erasable Programmable Read Only Memory	Electrically Erasable Programmable Read Only Memory (EEPROM), Erasable Programmable Read Only Memory (EPROM)
EFE	Early Fuel Evaporation	Cold Mixture Heater (CMH), Heat Control Valve (HCV)
EGR	Exhaust Gas Recirculation	Exhaust Gas Recirculation (EGR)
EI	Electronic Ignition	Toyota Distributorless Ignition (TDI)
EM	Engine Modification	Engine Modification (EM)
EPROM	Erasable Programmable Read Only Memory	Programmable Read Only Memory (PROM)
EVAP	Evaporative Emission	Evaporative Emission Control (EVAP)
FC	Fan Control	–
FEEPROM	Flash Electrically Erasable Programmable Read Only Memory	–
FEPROM	Flash Erasable Programmable Read Only Memory	–
FF	Flexible Fuel	–
FP	Fuel Pump	Fuel Pump
GEN	Generator	Alternator
GND	Ground	Ground (GND)
HO2S	Heated Oxygen Sensor	Heated Oxygen Sensor (HO2S)

IAC	Idle Air Control	Idle Speed Control (ISC)
IAT	Intake Air Temperature	Intake or Inlet Air Temperature
ICM	Ignition Control Module	–
IFI	Indirect Fuel Injection	Indirect Injection
IFS	Inertia Fuel–Shutoff	–
ISC	Idle Speed Control	–
KS	Knock Sensor	Knock Sensor
MAF	Mass Air Flow	Air Flow Meter
MAP	Manifold Absolute Pressure	Manifold Pressure Intake Vacuum
MC	Mixture Control	Electric Bleed Air Control Valve (EBCV) Mixture Control Valve (MCV) Electric Air Control Valve (EACV)
MDP	Manifold Differential Pressure	–
MFI	Multiport Fuel Injection	Electronic Fuel Injection (EFI)
MIL	Malfunction Indicator Lamp	Check Engine Light
MST	Manifold Surface Temperature	–
MVZ	Manifold Vacuum Zone	–
NVRAM	Non–Volatile Random Access Memory	–
O2S	Oxygen Sensor	Oxygen Sensor, O_2 Sensor (O_2S)
OBD	On–Board Diagnostic	On–Board Diagnostic (OBD)
OC	Oxidation Catalytic Converter	Oxidation Catalyst Converter (OC), CCo
OP	Open Loop	Open Loop
PAIR	Pulsed Secondary Air Injection	Air Suction (AS)
PCM	Powertrain Control Module	–
PNP	Park/Neutral Position	–
PROM	Programmable Read Only Memory	–
PSP	Power Steering Pressure	–
PTOX	Periodic Trap Oxidizer	Diesel Particulate Filter (DPF) Diesel Particulate Trap (DPT)
RAM	Random Access Memory	Random Access Memory (RAM)
RM	Relay Module	–
ROM	Read Only Memory	Read Only Memory (ROM)
RPM	Engine Speed	Engine Speed
SC	Supercharger	Supercharger
SCB	Supercharger Bypass	–
SFI	Sequential Multiport Fuel Injection	Electronic Fuel Injection (EFI), Sequential Injection
SPL	Smoke Puff Limiter	–
SRI	Service Reminder Indicator	–
SRT	System Readiness Test	–
ST	Scan Tool	–
TB	Throttle Body	Throttle Body
TBI	Throttle Body Fuel Injection	Single Point Injection Central Fuel Injection (Ci)
TC	Turbocharger	Turbocharger
TCC	Torque Converter Clutch	Torque Converter
TCM	Transmission Control Module	Transmission ECU (Electronic Control Unit)
TP	Throttle Position	Throttle Position
TR	Transmission Range	–

TVV	Thermal Vacuum Valve	Bimetallic Vacuum Switching Valve (BVSV) Thermostatic Vacuum Switching Valve (TVSV)
TWC	Three–Way Catalytic Converter	Three–Way Catalyst (TWC) CC_{RO}
TWC+OC	Three–Way + Oxidation Catalytic Converter	CC_R + CCo
VAF	Volume Air Flow	Air Flow Meter
VR	Voltage Regulator	Voltage Regulator
VSS	Vehicle Speed Sensor	Vehicle Speed Sensor (Read Switch Type)
WOT	Wide Open Throttle	Full Throttle
WU–OC	Warm Up Oxidation Catalytic Converter	–
WU–TWC	Warm Up Three–Way Catalytic Converter	Manifold Converter
3GR	Third Gear	–
4GR	Fourth Gear	–

ABBREVIATIONS USED IN THIS MANUAL

IN01H–0R

ATF	Automatic Transaxle Fluid
B_0	Overdrive Brake
B_1	Second coast Brake
B_2	Second Brake
B_3	First and Reverse Brake
C_0	Overdrive Direct Clutch
C_1	Forward Clutch
C_2	Direct Clutch
D	Disc
F	Flange
F_0	O/D One–way Clutch
F_1	No.1 One–way Clutch
F_2	No.2 One–way Clutch
MP	Multipurpose
O/D	Overdirve
P	Plate
SSM	Special Service Materials
SST	Special Service Tools

STANDARD BOLT TORQUE SPECIFICATIONS

IN008–02

HOW TO DETERMINE BOLT STRENGTH

	Mark	Class		Mark	Class
Hexagon head bolt	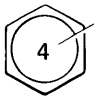 Bolt head No. 4— 5— 6— 7— 8— 9— 10— 11—	4T 5T 6T 7T 8T 9T 10T 11T	Stud bolt	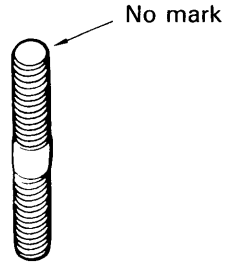 No mark	4T
	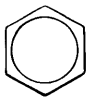 No mark	4T		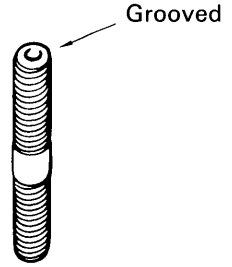 Grooved	6T
Hexagon flange bolt w/ washer hexagon bolt	 No mark	4T			
Hexagon head bolt	 2 protruding lines	5T			
Hexagon flange bolt w/ washer hexagon bolt	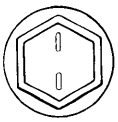 2 protruding lines	6T	Welded bolt	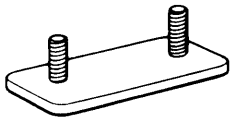	4T
Hexagon head bolt	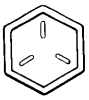 3 protruding lines	7T			
Hexagon head bolt	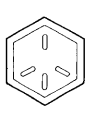 4 protruding lines	8T			

V00078

SPECIFIED TORQUE FOR STANDARD BOLTS

Class	Diameter mm	Pitch mm	Specified torque					
			Hexagon head bolt			Hexagon flange bolt		
			N·m	kgf·cm	ft·lbf	N·m	kgf·cm	ft·lbf
4T	6	1	5	55	48 in.·lbf	6	60	52 in.·lbf
	8	1.25	12.5	130	9	14	145	10
	10	1.25	26	260	19	29	290	21
	12	1.25	47	480	35	53	540	39
	14	1.5	74	760	55	84	850	61
	16	1.5	115	1,150	83	–	–	–
5T	6	1	6.5	65	56 in.·lbf	7.5	75	65 in.·lbf
	8	1.25	15.5	160	12	17.5	175	13
	10	1.25	32	330	24	36	360	26
	12	1.25	59	600	43	65	670	48
	14	1.5	91	930	67	100	1,050	76
	16	1.5	140	1,400	101	–	–	–
6T	6	1	8	80	69 in.·lbf	9	90	78 in.·lbf
	8	1.25	19	195	14	21	210	15
	10	1.25	39	400	29	44	440	32
	12	1.25	71	730	53	80	810	59
	14	1.5	110	1,100	80	125	1,250	90
	16	1.5	170	1,750	127	–	–	–
7T	6	1	10.5	110	8	12	120	9
	8	1.25	25	260	19	28	290	21
	10	1.25	52	530	38	58	590	43
	12	1.25	95	970	70	105	1,050	76
	14	1.5	145	1,500	108	165	1,700	123
	16	1.5	230	2,300	166	–	–	–
8T	8	1.25	29	300	22	33	330	24
	10	1.25	61	620	45	68	690	50
	12	1.25	110	1,100	80	120	1,250	90
9T	8	1.25	34	340	25	37	380	27
	10	1.25	70	710	51	78	790	57
	12	1.25	125	1,300	94	140	1,450	105
10T	8	1.25	38	390	28	42	430	31
	10	1.25	78	800	58	88	890	64
	12	1.25	140	1,450	105	155	1,600	116
11T	8	1.25	42	430	31	47	480	35
	10	1.25	87	890	64	97	990	72
	12	1.25	155	1,600	116	175	1,800	130

SERVICE SPECIFICATIONS

SERVICE DATE

AT06P–0C

Oil Pump

Body clearance	STD	0.07 – 0.15 mm 0.0028 – 0.0059 in.
	Maximum	0.3 mm 0.012 in.
Tip clearance	STD	0.11 – 0.14 mm 0.0043 – 0.0055 in.
	Maximum	0.3 mm 0.012 in.
Side clearance	STD	0.02 – 0.05 mm 0.0008 – 0.0020 in.
	Maximum	0.1 mm 0.004 in.
Pump body bushing inside diameter	Maximum	38.18 mm 1.5031 in.
Stator shaft bushing inside diameter		
	Front side Maximum	21.57 mm 0.8492 in.
	Rear side Maximum	27.07 mm 1.0657 in.

Direct Clutch

Clutch drum bushing inside diameter	Maximum	47.07 mm 1.8531 in.
Direct clutch piston stroke		1.11 – 1.44 mm 0.0437 – 0.0567 in.
Flange thickness		2.60 mm 0.1024 in. 3.00 mm 0.1181 in.

Forward Clutch

Piston stroke		1.41 – 1.82 mm 0.0555 – 0.0717 in.
Flange thickness		2.8 mm 0.110 in. 3.0 mm 0.118 in. 3.2 mm 0.126 in. 3.4 mm 0.134 in. 3.6 mm 0.142 in.

Front Planetary Gear

Ring gear bushing inside diameter	Standard	19.025 – 19.050 mm 0.7490 – 0.7500 in.
Planetary pinion gear thrust clearance	Standard	0.20 – 0.50 mm 0.0079 – 0.0197 in.

Rear Planetary Gear

Planetary pinion gear thrust clearance	Standard	0.20 – 0.50 mm 0.0079 – 0.0197 in.

Overdrive Unit

Overdrive direct clutch piston stroke		1.21 – 1.91 mm 0.0476 – 0.0752 in.
Overdrive direct clutch bushing inside diameter	Maximam	22.09 mm 0.8697 in.
Counter drive gear preload		9 – 15 N 920 – 1,530 gf 2.0 – 3.4 lbf
Planetary pinion gear thrust clearance	Standard	0.20 – 0.50 mm 0.0079 – 0.0197 in.

Valve Body Spring

Spring	Free length and Coil outer diameter mm (in.)	Total No. of coils and Color
Upper valve body		
Throttle modulator valve	21.7 (0.854) 9.5 (0.374)	9.5 None
Accumulator control valve	28.1 (0.105) 10.6 (0.417)	13.0 Yellow
Low coast modulator valve	21.6 (0.850) 7.9 (0.311)	11.5 None
Down shift plug	29.8 (1.172) 8.7 (0.344)	13.5 Yellow
Throttle valve	30.7 (1.209) 9.2 (0.362)	9.5 None
Second coast modulator valve	20.9 (0.824) 8.5 (0.336)	10.0 Light Green
Cut–back valve	21.8 (0.858) 6.0 (0.236)	13.5 None
Lock–up relay valve	26.6 (1.046) 10.2 (0.402)	11.5 Green
Lower valve body		
Pressure relief valve	11.2 (0.441) 6.4 (0.252)	7.5 None
1 – 2 shift valve	29.3 (1.152) 9.7 (0.382)	10.5 None
2 – 3 shift valve	29.3 (1.152) 9.7 (0.382)	10.5 None
3 – 4 shift valve	29.3 (1.152) 9.7 (0.382)	10.5 None
Primary regulator valve	66.7 (2.453) 18.6 (0.732)	12.5 None
Secondary regulator valve	43.6 (1.717) 10.9 (0.429)	11.5 None
Lock–up signal valve	30.0 (1.181) 8.2 (0.323)	11.5 None
Cooler By–pass valve	19.9 (0.784) 11.0 (0.433)	8.5 None

Valve Body Retainer

Reteiner	Height mm (in.)	Width mm (in.)	Thickness mm (in.)
Upper valve body			
Throttle Modulator valve	9.2 (0.362)	5.0 (0.197)	3.2 (0.126)
Accumulator control valve	11.5 (0.453)	5.0 (0.197)	3.2 (0.126)
Cut–back valve	9.2 (0.591)	5.0 (0.197)	3.2 (0.126)
Lock–up relay valve	15.0 (0.591)	5.0 (0.197)	3.2 (0.126)
Second coast modulator valve	15.0 (0.591)	5.0 (0.197)	3.2 (0.126)
Lower valve body			
Primary regulator valve	9.2 (0.362)	5.0 (0.197)	3.2 (0.126)

1 – 2 shift valve	9.2 (0.362)	5.0 (0.197)	3.2 (0.126)
2 – 3 shift valve	8.0 (0.315)	5.0 (0.197)	3.2 (0.126)
3 – 4 shift valve	8.0 (0.315)	5.0 (0.197)	3.2 (0.126)
Lock–up signal valve	15.0 (0.591)	5.0 (0.197)	3.2 (0.126)

Accumulator Spring

Spring	Free length mm (in.)	Color
C_1	57.64 (2.2693)	Red, Purple
B_2	69.39 (2.7323)	Green, White
C_2	70.21 (2.7641)	Purple

Differential

Drive pinion preload (at starting)	New bearing	10 – 16 kgf·cm	1.0 – 1.6 N·m 8.7 – 13.9 in.·lbf
	Reused bearing	5 – 8 kgf·cm	0.5 – 0.8 N·m 4.3 – 6.9 in.·lbf
Total preload (at starting)		Add drive pinion preload	
	New bearing	2.9 – 4.0 kgf·cm	0.3 – 0.4 N·m 2.5 – 3.5 in.·lbf
	Reused bearing	1.5 – 2.0 kgf·cm	0.1 – 0.2 N·m 1.3 – 1.7 in.·lbf
Pinion to side gear backlash		0.0020 – 0.0079 in.	0.05 – 0.20 mm
Side gear thrust washer thickness		0.0374 in.	0.95 mm
		0.0394 in.	1.00 mm
		0.0413 in.	1.05 mm
		0.0433 in.	1.10 mm
		0.0427 in.	1.20 mm

Side bearing adjusting shim thickness	1.90 mm 0.0748 in. 1.95 mm 0.0768 in. 2.00 mm 0.0787 in. 2.05 mm 0.0807 in. 2.10 mm 0.0827 in. 2.15 mm 0.0846 in. 2.20 mm 0.0866 in. 2.25 mm 0.0886 in. 2.30 mm 0.0906 in. 2.35 mm 0.0925 in. 2.40 mm 0.0945 in. 2.45 mm 0.0965 in. 2.50 mm 0.0984 in. 2.55 mm 0.1004 in. 2.60 mm 0.1024 in. 2.65 mm 0.1043 in. 2.70 mm 0.1063 in. 2.75 mm 0.1083 in. 2.80 mm 0.1103 in.

AT06Q–0C

TORQUE SPECIFICATION

Part tightened	N·m	kgf·cm	ft·lbf
Stator shaft x Oil pump body	10	100	7
Upper valve body x Lower valve body	5.4	55	48 <in.lbf>
Ring gear x Differential case	97	985	71
Side bearing cap x Transaxle case	72	730	53
Bearing retainer x Transaxle case	19	195	14
Counter drive gear x Drive pinion	172	1,750	127
Carrier cover x Transaxle case	25	250	18
Parking lock pawl bracket	7.4	75	65 in.·lbf
Overdrive case x Transaxle case	25	260	19
Oil pump x Transaxle case	22	220	16
Valve body x Transaxle case	10	100	7
Manual valve body x Transaxle case	10	100	7
Detent spring x Valve body	10	100	7
Oil tube bracket x Transaxle case	10	100	7
Oil strainer x Valve body	10	100	7
Oil pan x Transaxle case	4.9	50	43 in.·lbf
Park/Neutral position switch	6.9	70	61 in.·lbf
Park/Neutral position switch adjusting bolt	5.4	55	48 in.·lbf
Union	27	275	20

GENERAL DESCRIPTION

AX0EP–02

The A140E automatic transaxle described in this AX section is a 4–speed lock–up automatic transaxle developed exclusively for use with a transversely–mounted engine.

Sectional View

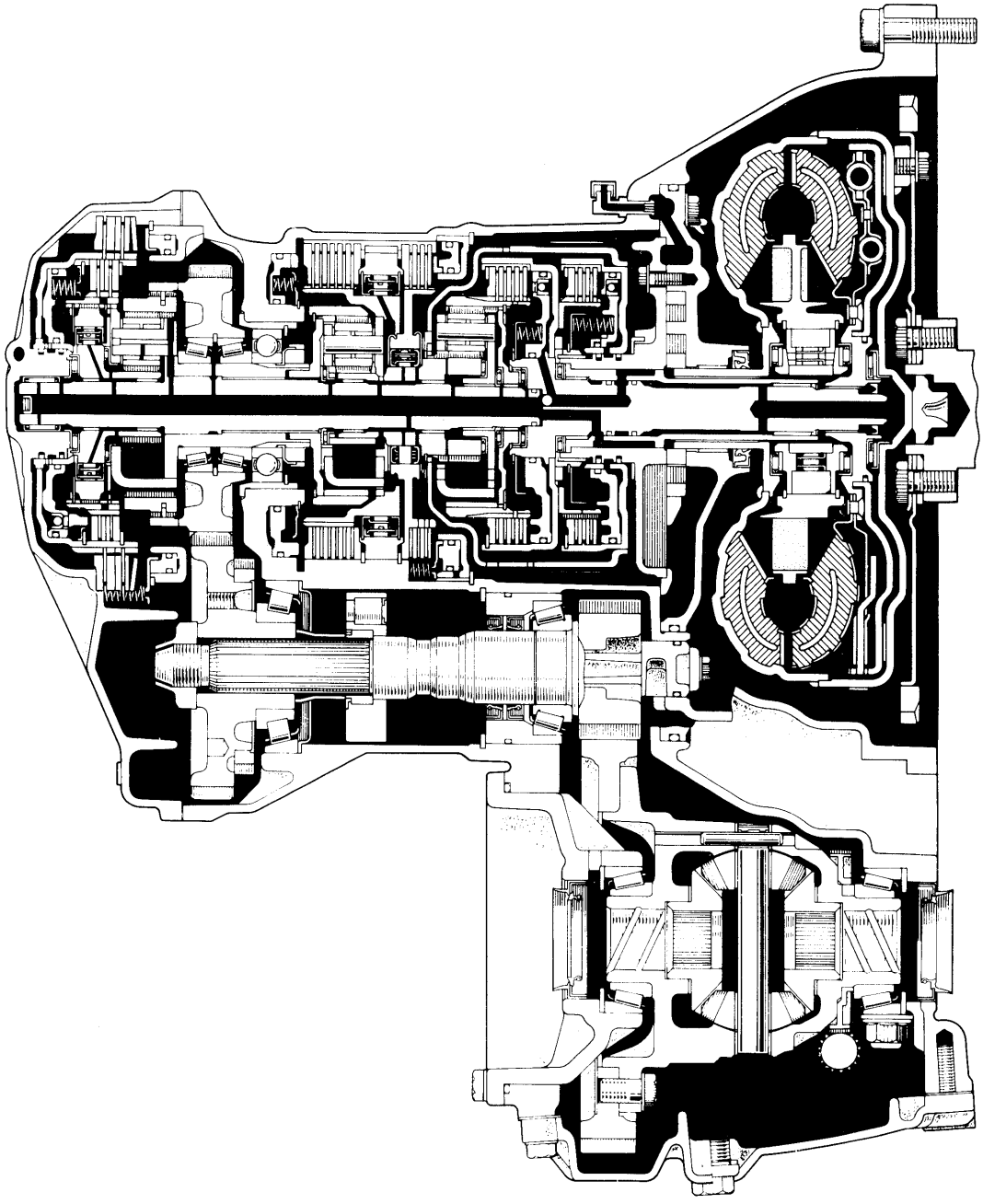

N00509

General Specifications

Type of Transaxle		A140E
Type of Engine		5S–FE
Torque Converter Clutch Stall Torque Ratio		2.0 : 1
Lock–up Mechanism		Equipped
Gear Ratio	1st Gear	2.810
	2nd Gear	1.549
	3rd Gear	1.000
	O/D Gear	0.706
	Reverse Gear	2.296
Number of Discs and Plates	O/D Direct Clutch (C_0)	2/1
	Forward Clutch (C_1)	4/4
	Direct Clutch (C_2)	3/3
	Second Brake (B_2)	3/3
	First and Reverse Brake (B_3)	6/5
	O/D Brake (B_0)	2/3
B_1 Band Width	mm (in.)	25 mm (0.98 in.)
ATF Type		ATF DEXRON ® @@@@@: [g 2]
Capacity	liter (US qts, Imp. qts)	
	Transaxle	5.6 (5.9, 4.9)
	Differential	1.6 (1.7, 1.4)

OPERATION
OPERATION

AX0SW–01

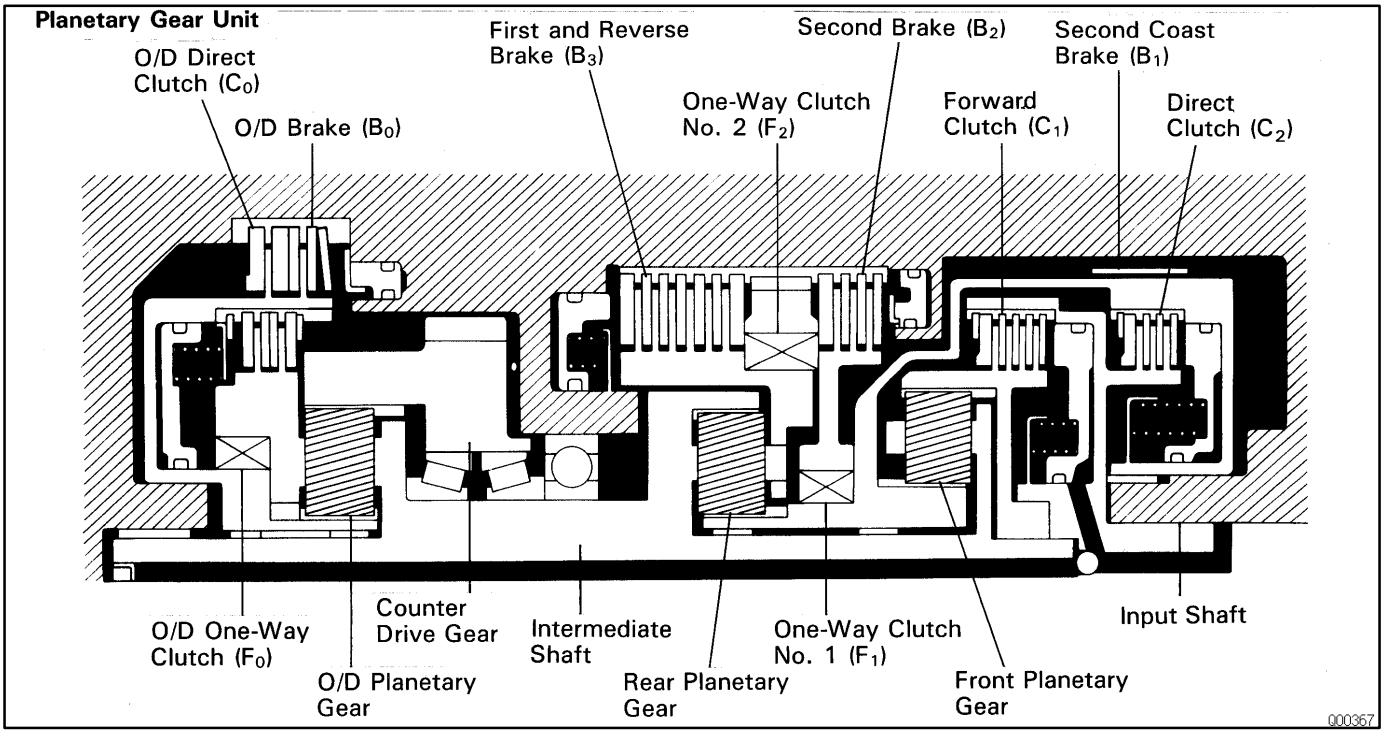

Shift lever position	Gear Position	C_0	C_1	C_2	B_0	B_1	B_2	B_3	F_0	F_1	F_2
P	Parking	○									
R	Reverse	○		○				○			
N	Neutral	○									
D	1st	○	○						○		○
	2nd	○	○				○		○	○	
	3rd	○	○	○			○		○		
	O/D		○	○	○		○				
2	1st	○	○						○		○
	2nd	○	○			○	○		○	○	
	*3rd	○	○	○			○		○		
L	1st	○	○					○	○		○
	*2nd	○	○			○	○		○	○	

V02495

1. FUNCTION OF COMPONENTS

FUNCTION	OPERATION
O/D Direct Clutch (C_0)	Connects overdrive sun gear and overdrive carrier
O/D Brake (B_0)	Prevents overdrive sun gear from turning either clockwise or counterclockwise
O/D One–way Clutch (F_0)	When transmission is being driven by engine, connects overdrive sun gear and overdrive carrier.
Front Clutch (C_1)	Connects input shaft and intermediate shaft
Rear Clutch (C_2)	Connects input shaft and front and rear planetary sun gears
No.1 Brake (B_1)	Prevents front and rear planetary sun gears from turning either clockwise or counterclockwise
No.2 Brake (B_2)	Prevents outer race of F_1 from turning either clockwise or counterclockwise, thus previnting front and rear planetary sun gears from turning counterclockwise
No.3 Brake (B_3)	Prevents front planetary carrier from turning either clockwise or counterclockwise
No.1 One–way Clutch (F_1)	When B_2 is operating prevents front and rear planetary sun gears from turning counterclockwise
No.2 One–way Clutch (F_2)	Prevents front planetary carrier from turning counterclockwise

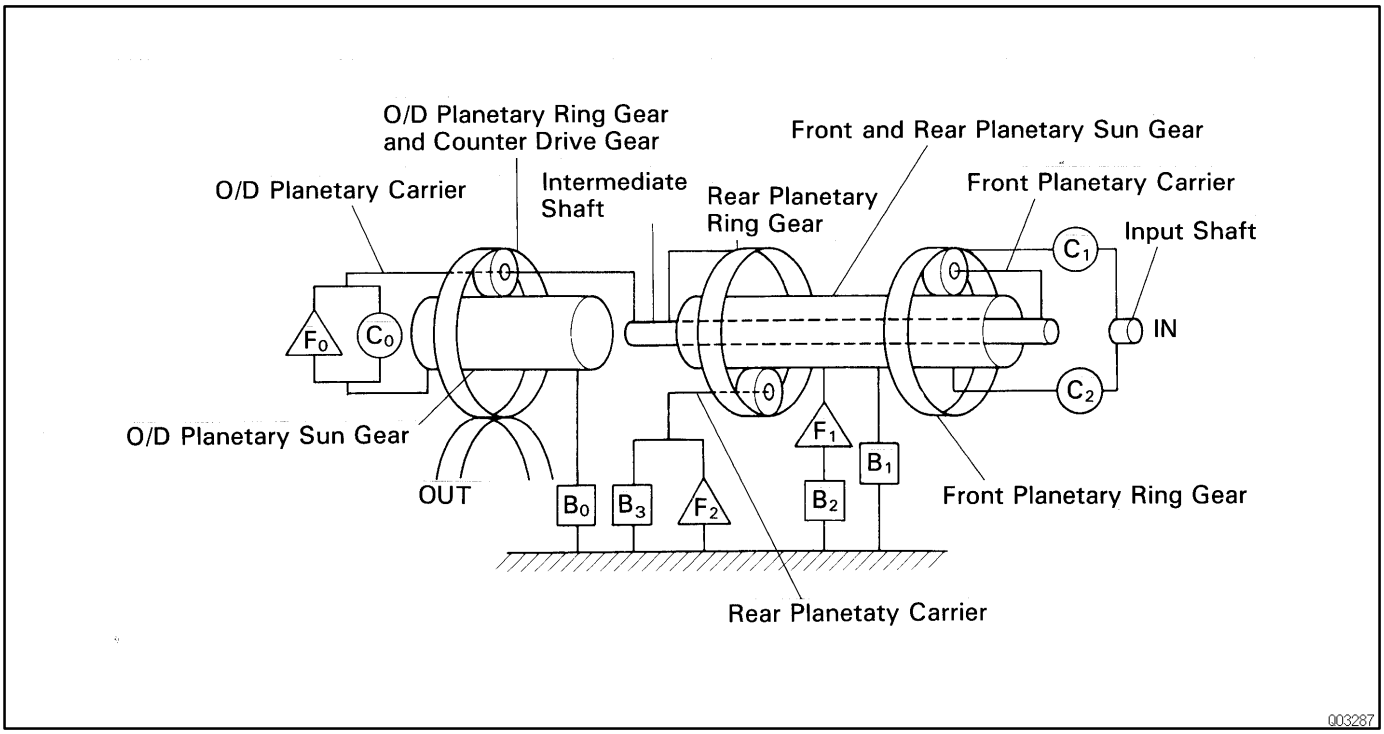

Power from the engine transmitted to the input shaft via the torque converter is then transmitted to the planetary gears by the operation of the clutch.
By operation of the brake and one–way clutch, either the planetary carrier or the planetary sun gear are immobilized, altering the speed of revolution of the planetary gear unit.
Shift change is carried out by altering the combination of clutch and brake operation.
Each clutch and brake operates by hydraulic pressure; gear position is decided according to the throttle opening angle and vehicle speed, and shift change automatically occurs.
The conditions of operation for each gear position are shown on the following illustrations:

D or 2 Position 1st Gear

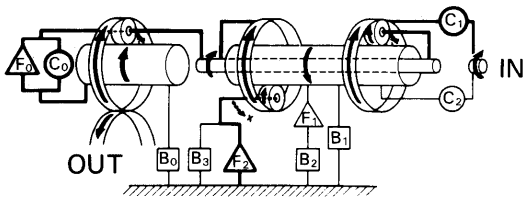

AT1097

2 Position 2nd Gear

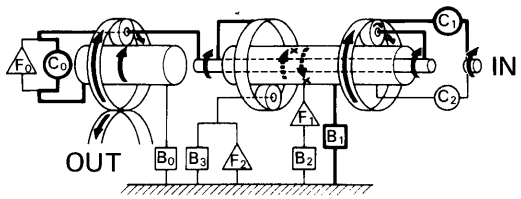

AT1102

D Position 2nd Gear

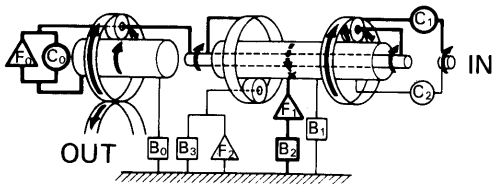

AT1098

L Position 1st Gear

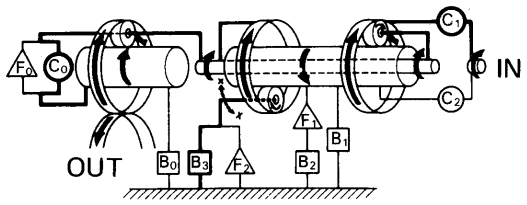

AT1103

D Position 3rd Gear

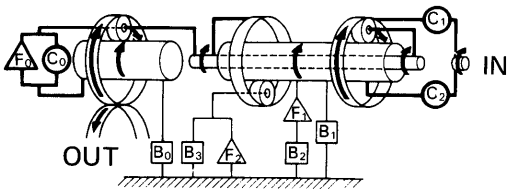

AT1099

R Position Reverse Gear

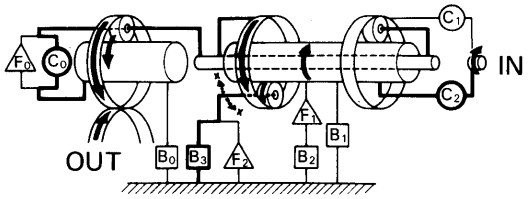

AT1101

Position O/D Gear

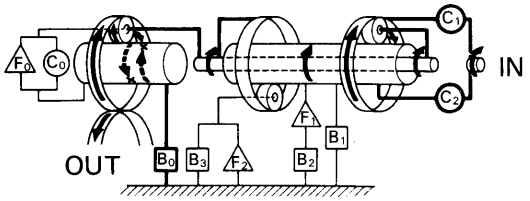

AT1100

V02497

2. HYDRAULIC CONTROL SYSTEM

The hydraulic control system is composed of the oil pump, the valve body, the solenoid valves, the accumulators, the clutches and brakes, and the governor valve as well as the fluid passages which connect all of these components.

Based on the hydraulic pressure created by the oil pump, the hydraulic control system governs the hydraulic pressure acting on the torque converter clutch, clutches and brakes in accordance with the vehicle driving conditions.

There are three solenoid valves on the valve body.

The No.1 and No.2 solenoid valves are turned on and off by signals from the ECM to operate the shift valves and change the gear shift position.

The No.3 solenoid valve is operated by signals from the ECM to engage or disengage the lock–up clutch of the torque converter.

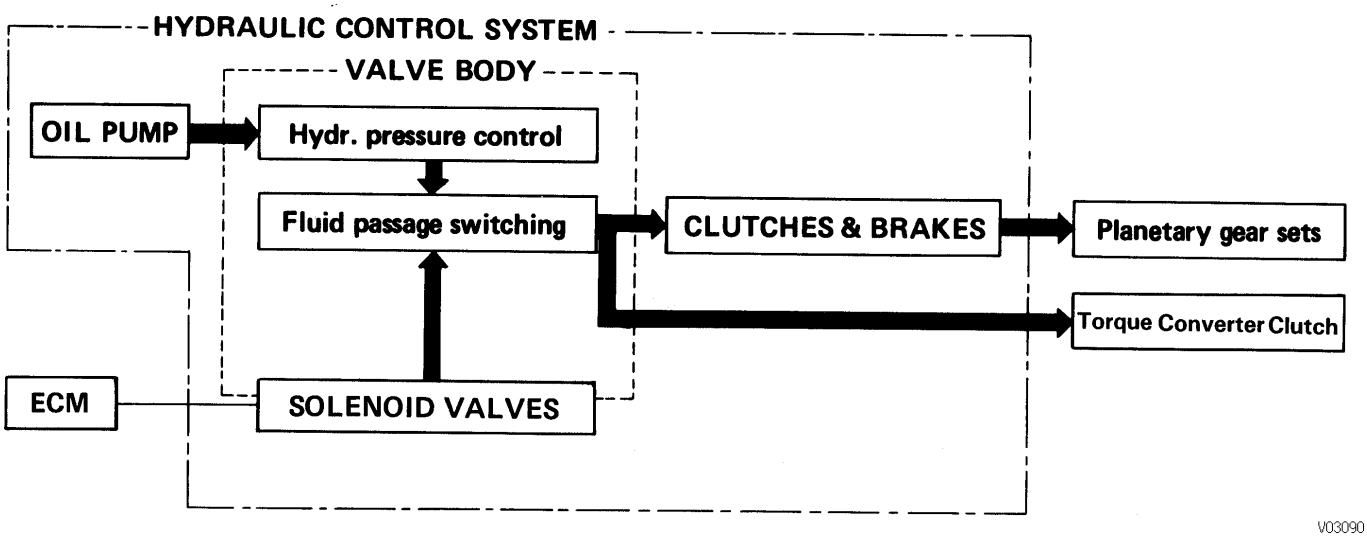

2. ELECTRONIC CONTROL SYSTEM

The electronic control system for controlling the shift timing and the operation of the lock–up clutch is composed of the following 3 parts:

(a) Sensors: These sense the vehicle speed and throttle position and send this data to the ECM in the form of electronic signals.

(b) ECM: This determines the shift and lock–up timing based upon the signals from the sensors.

(c) Actuators: Solenoid valves divert hydraulic pressure from one circuit of the hydraulic control unit to another, thus controlling shifting and lock–up timing.

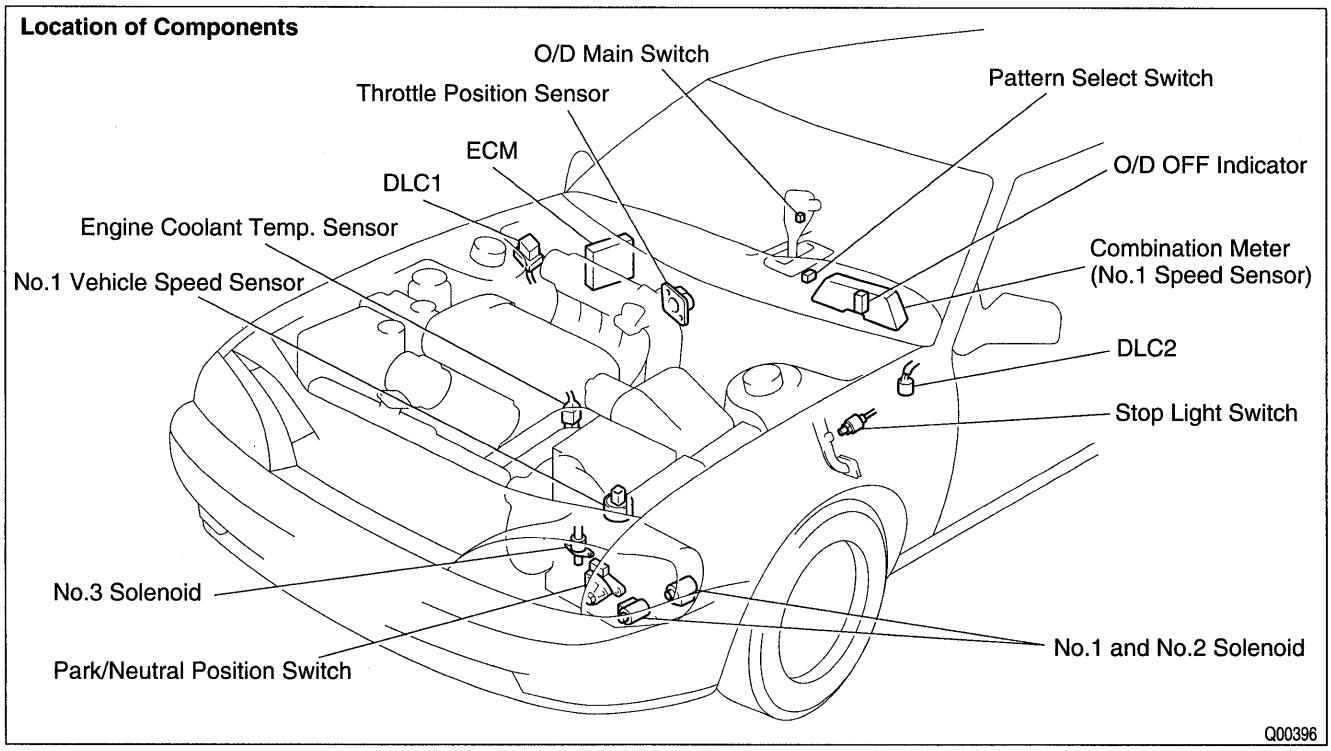

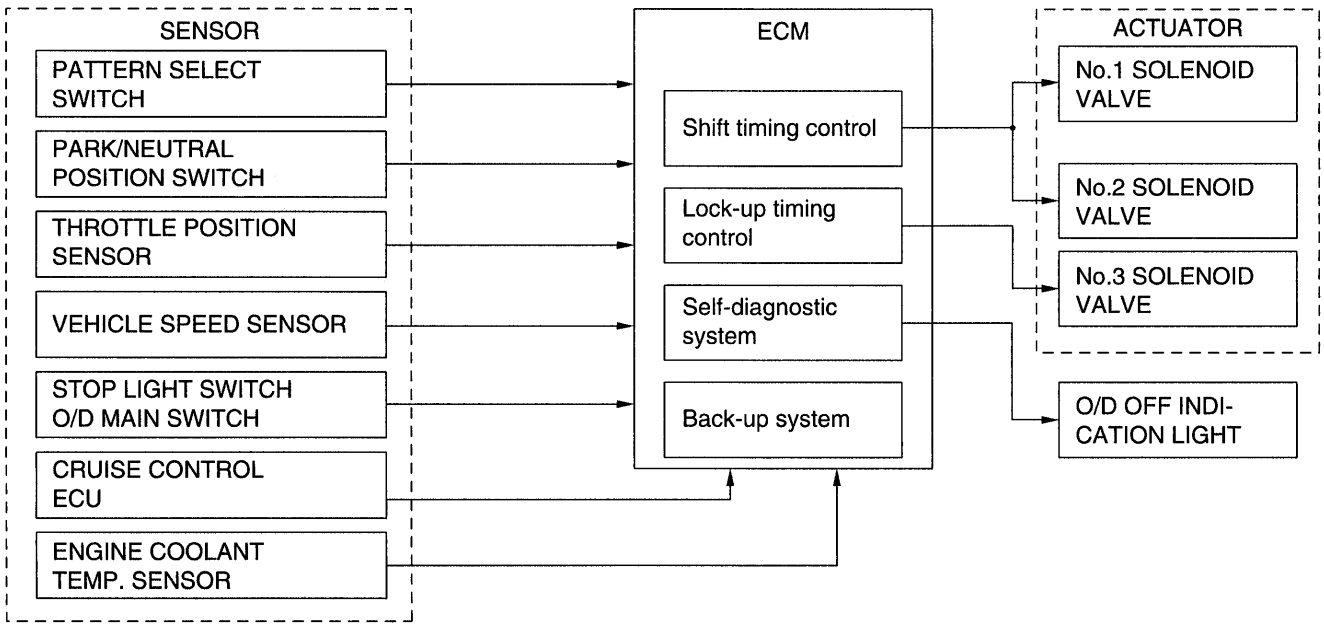

PREPARATION

SST (SPECIAL SERVICE TOOLS)

AX0EQ–02

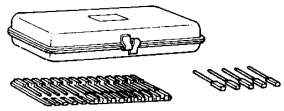	09240–00020	Wire Gauge Set	
	09330–00021	Companion Flange Holding Tool	
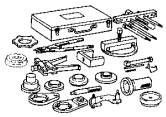	09350–32014	TOYOTA Automatic Transmission Tool Set	
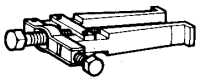	09308–10010	Oil Seal Puller	
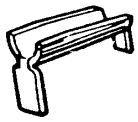	(09351–32020)	Stator Stopper	
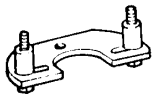	(09351–32032)	Counter Driven Gear Holding Tool	
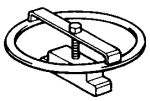	(09351–32040)	No.1 Piston Spring Compressor	
	(09351–32050)	Snap Ring Expander	
	(09351–32061)	Oil Pump Puller	
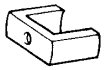	(09351–32070)	No.2 Piston Spring Compressor	
	(09351–32080)	Lock Nut Wrench	
	(09351–32090)	Oil Seal Remover & Replacer	
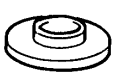	(09351–32100)	Drive Pinion Bearing Replacer	

	(09351–32111) Side Bearing Race Replacer	
	(09351–32120) Overdrive Bearing Replacer	
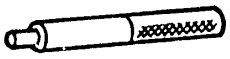	(09351–32130) Handle	
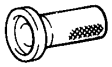	(09351–32140) Oil Seal Replacer	
	(09351–32150) Oil Seal Replacer	
	(09351–32190) Measure Terminal	
	(09351–32200) No.3 Piston Spring Compressor	
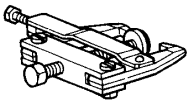	09502–10012 Differential Side Bearing Puller •	
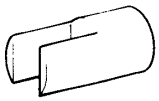	09564–32011 Differential Preload Adaptor	
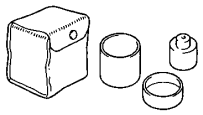	09710–28020 Front Suspension Bushing Tool Set•	
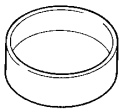	(09710–08040) Bushing Replacer•	
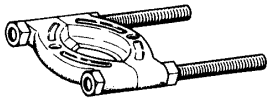	09950–00020 Bearing Remover	

AX0ER–02

RECOMMENDED TOOL

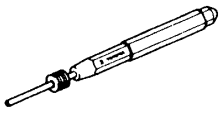	09031–00030 Pin Punch .	

AX0ES–02

EQUIPMENT

Feeler gauge	
Vernier calipers	
Dial indicator or dial indicator with magnetic base	
Straight edge	
Torque wrench	

AX0ET–02

LUBRICANT

Item	US qts	Liters / Imp qts	Clacification
Automatic Transaxle Fluid		5.6	
(w/o Differential Fluid) Dry Fill	5.9	4.9	ATF DEXRON ® @@@@@: [g 2]
Drain and Refill		2.5	
	2.6	2.2	
Differential Fluid		1.6	ATF DEXRON ® @@@@@: [g 2]
	1.7	1.4	

AX0EU–02

SSM (SPECIAL SERVICE MATERIALS)

08826–00090	Seal Packing 1281, THREE BOND 1281 or equivalent (FIPG)	
08833–00070	Adhesive 1324, THREE BOND 1324 or equivalent	

COMPONENT PARTS REMOVAL

AX0GS–02

COMPONENTS

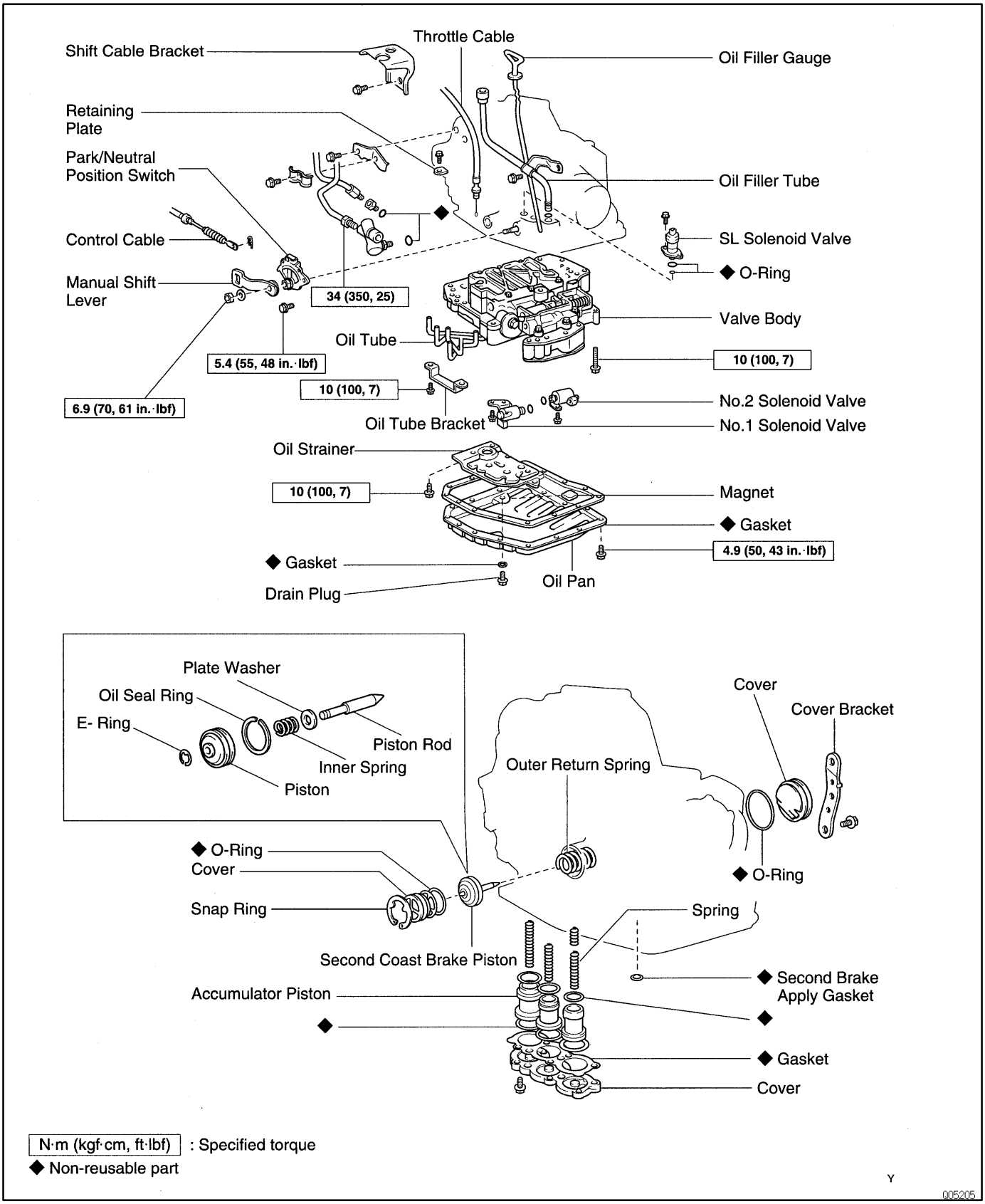

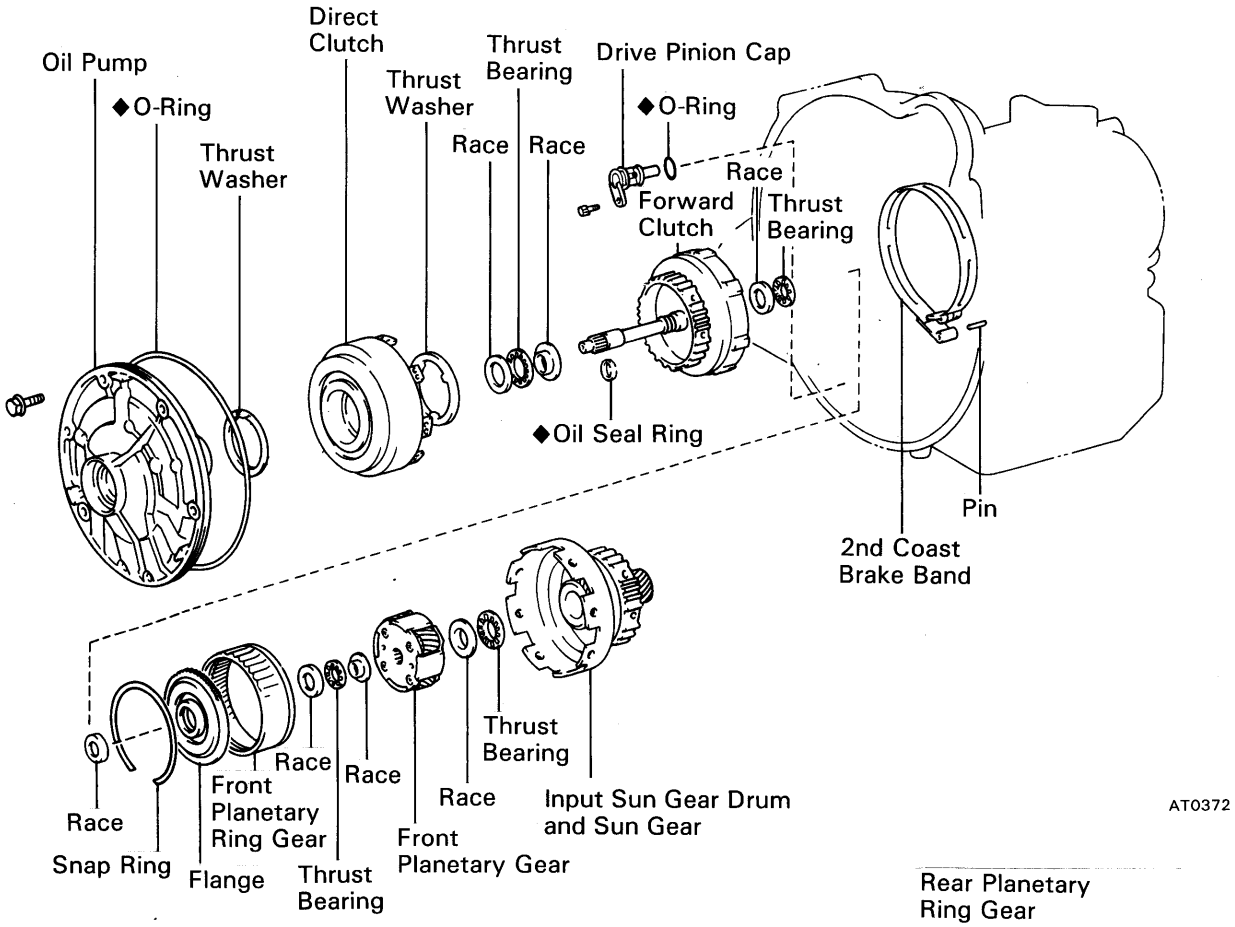

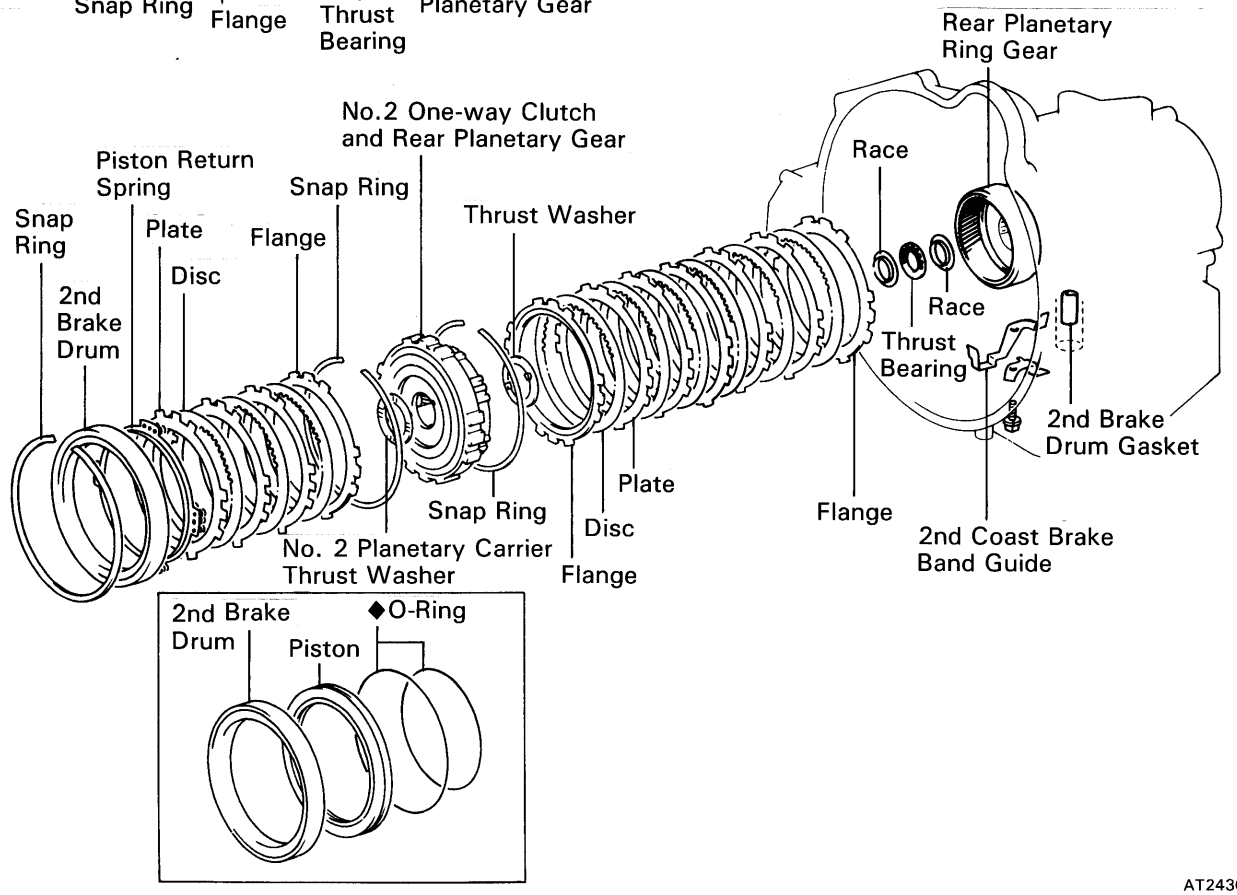

◆ Non-reusable part

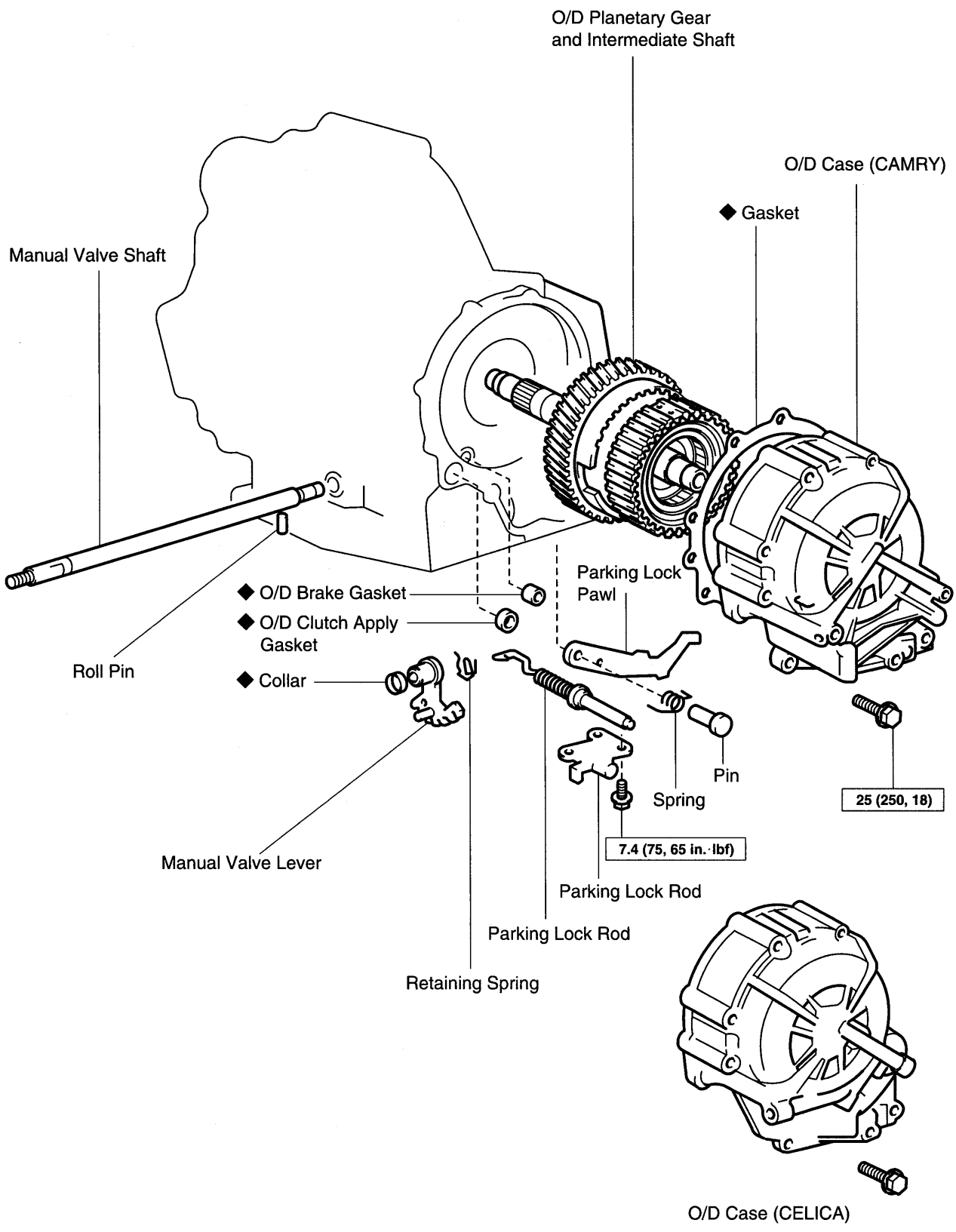

N·m (kgf·cm, ft·lbf) : Specified torque
◆ Non-reusable part

Y
005241

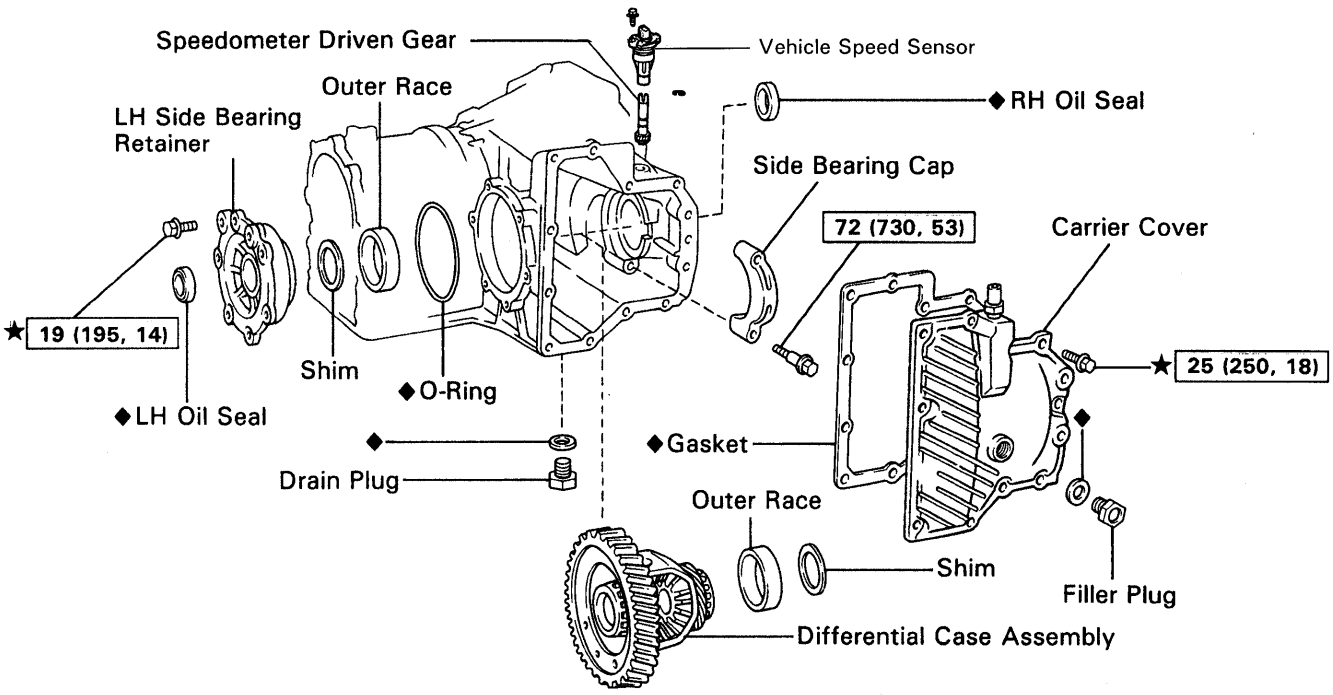

Q00389

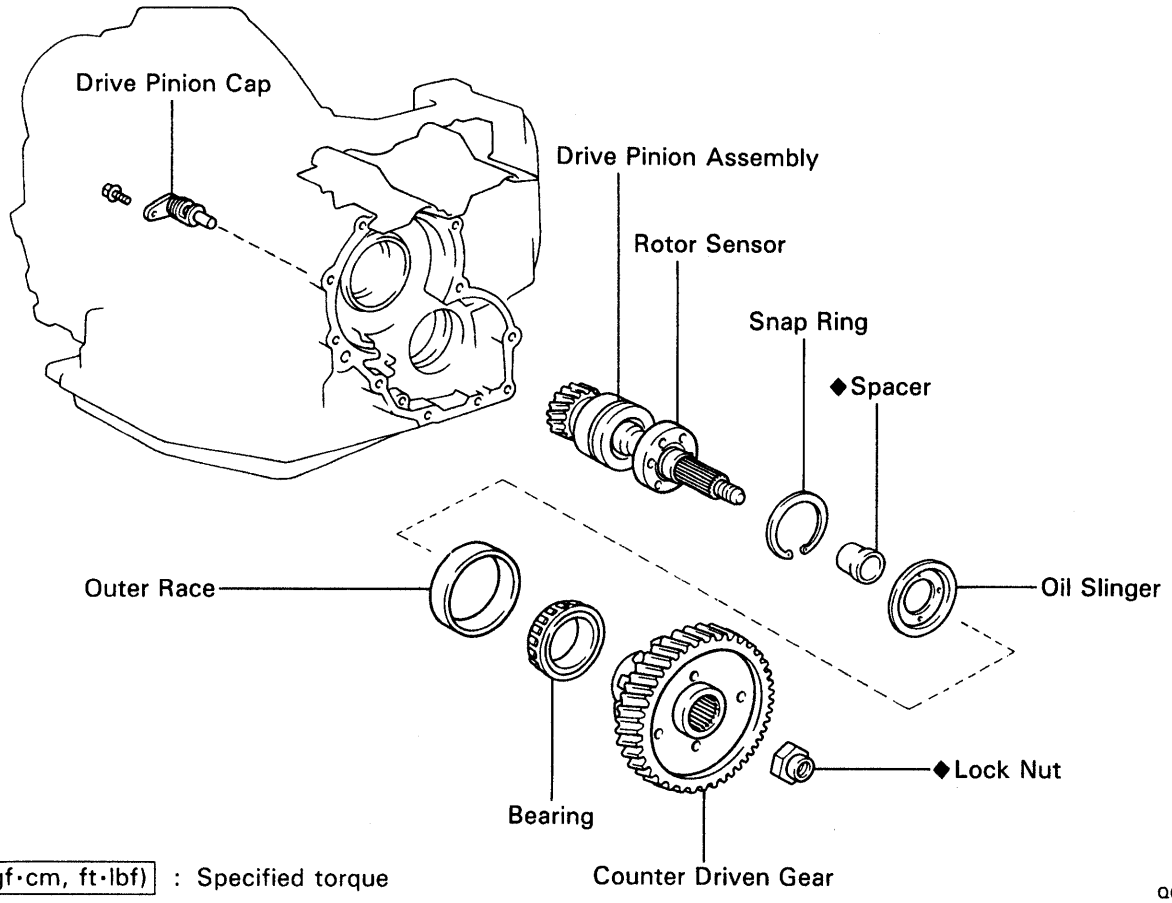

N·m (kgf·cm, ft·lbf) : Specified torque
◆ Non-reusable part
★ Precoated part

Q00047

Z11729

AX0EW–02

SEPARATE BASIC SUBASSEMBLY

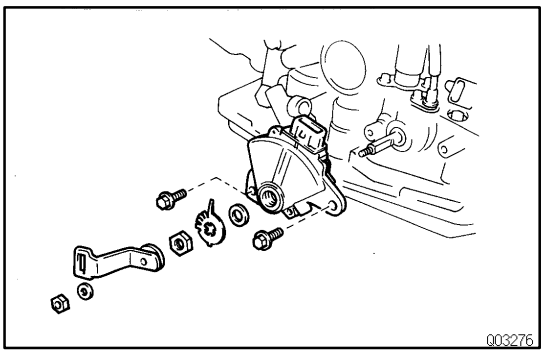

1. REMOVE PARK/NEUTRAL POSITION SWITCH

(a) Remove the manual shift lever.
(b) Pry off the lock washer and remove the manual valve shaft nut.
(c) Remove the 2 bolts and pull out the park/neutral position switch.

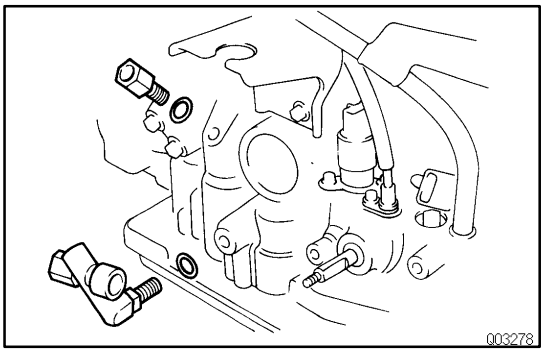

2. REMOVE UNION AND ELBOW

(a) Using the open end wrench, remove the union and elbow.
(b) Remove the O–rings from the union and elbow.

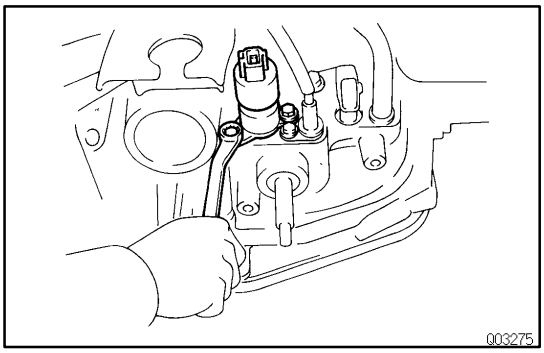

3. REMOVE SL SOLENOID

(a) Disconnect the connector.
(b) Remove the 2 bolts and SL solenoid.

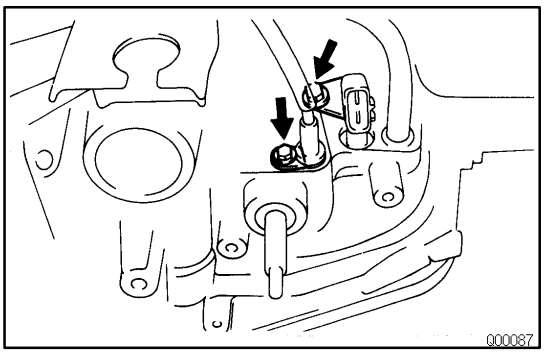

4. REMOVE THROTTLE CABLE RETAINING PLATE

5. REMOVE SOLENOID WIRE RETAINING BOLT

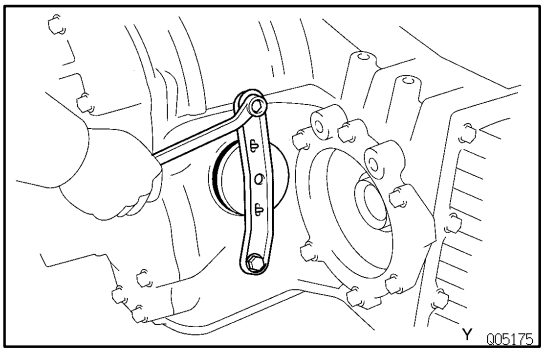

6. REMOVE COVER

(a) Remove the 2 bolts and cover bracket.

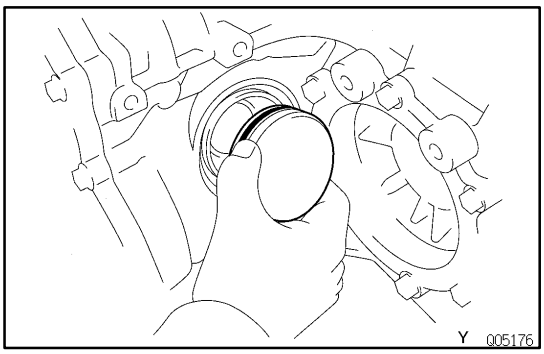

(b) Remove the cover.

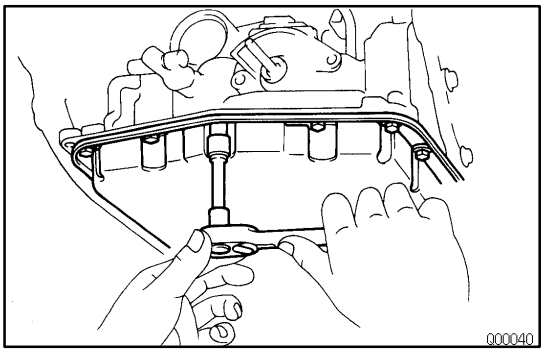

7. REMOVE OIL PAN AND GASKET

(a) Remove the 15 bolts.

(b) Remove the oil pan by lifting transaxle case.

NOTICE: Do not turn the transaxle over as this will contaminate the valve body with the foreign materials in the bottom of the oil pan.

(c) Place the transaxle on wooden blocks to prevent damage to the tube bracket.

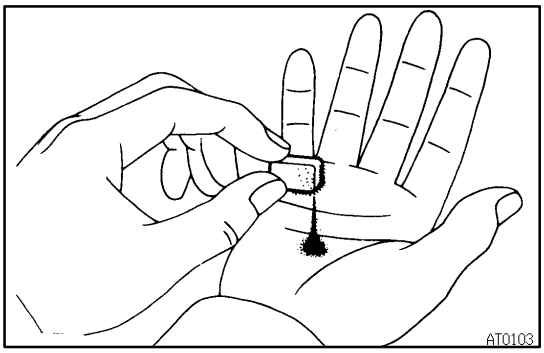

8. EXAMINE PARTICLES IN PAN

Remove the magnets and use them to collect any steel chips. Look carefully at the chips and particles in the oil pan and on the magnets to anticipate what type of wear you will find in the transmission:

Steel (magnetic): bearing, gear and plate wear

Brass (non–magnetic): bushing wear

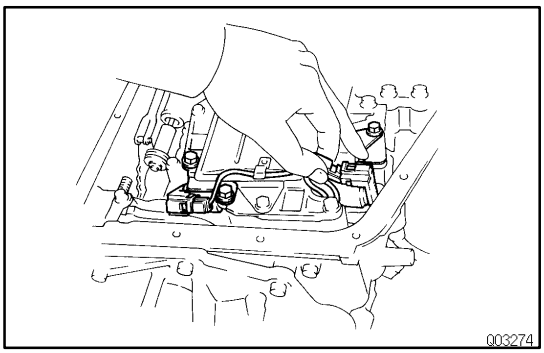

9. DISCONNECT NO.1 AND NO.2 SOLENOID CONNECTORS

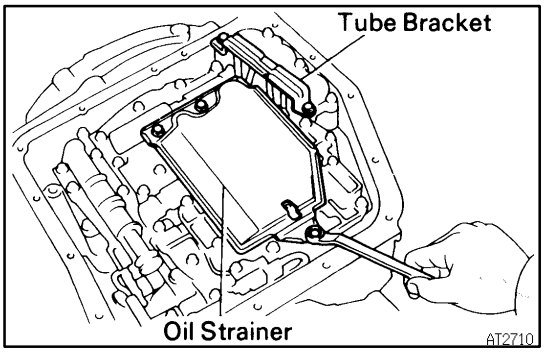

10. REMOVE TUBE BRACKET AND OIL STRAINER

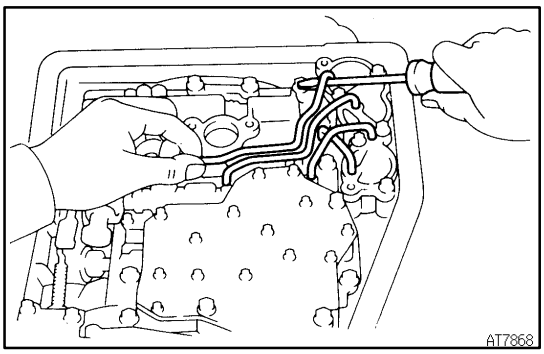

11. REMOVE OIL TUBES

Pry up both tube ends with a large screwdriver and remove the 4 tubes.

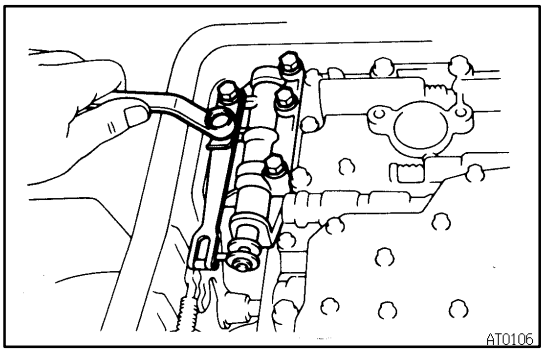

12. REMOVE MANUAL DETENT SPRING

13. REMOVE MANUAL VALVE AND MANUAL VALVE BODY

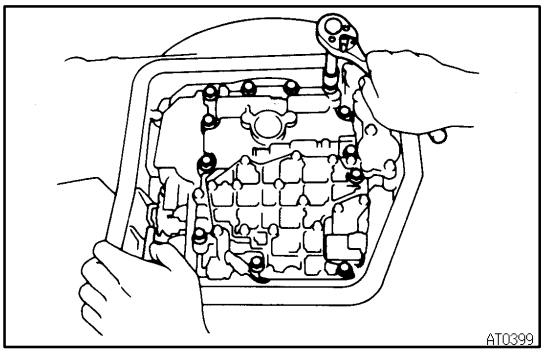

14. REMOVE VALVE BODY

(a) Remove the 12 bolts.

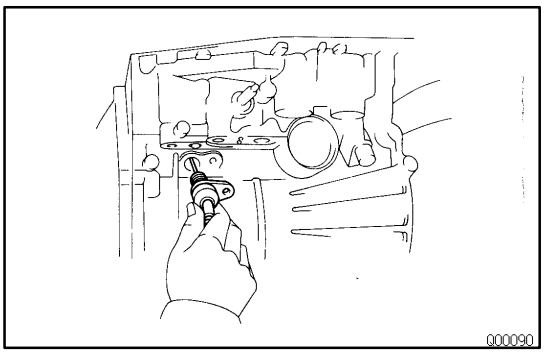

15. REMOVE THROTTLE CABLE AND SOLENOID WIRING FROM CASE

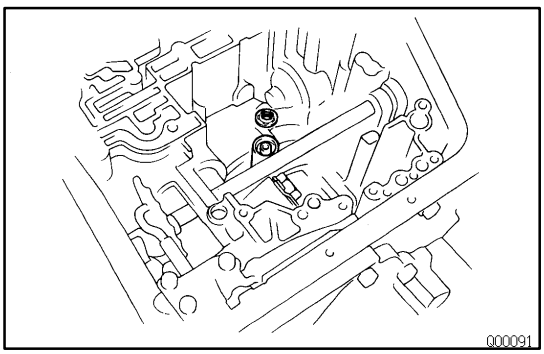

16. REMOVE SECOND BRAKE APPLY GASKET

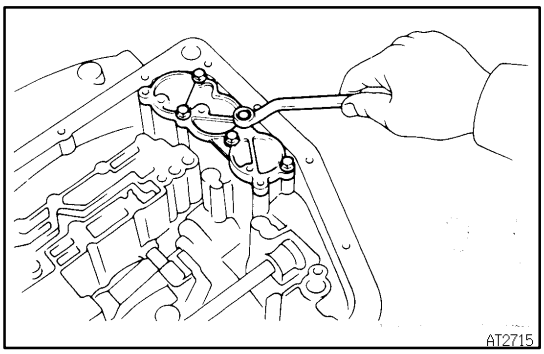

17. REMOVE ACCUMULATOR PISTON AND SPRINGS

(a) Loosen the 5 bolts one turn at a time until the spring tension is released.

(b) Remove the cover and gasket.

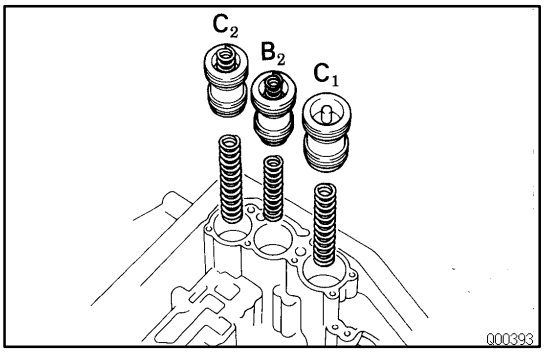

(c) Remove the piston and spring for C_1 and C_2.

(d) Remove the O–rings.

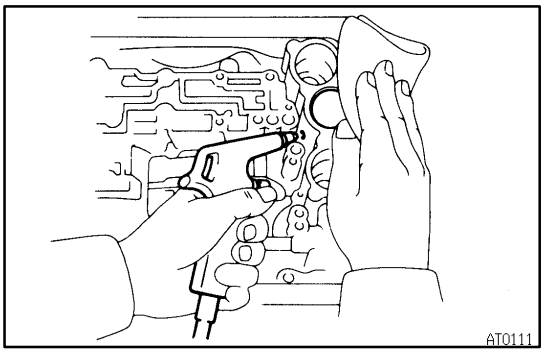

(e) Pop out piston C_1 into a rag, using low–pressure compressed air 98 kPa (1 kgf/cm^2, 14 psi).

(f) Remove the 2 O–rings from the B_2 piston.

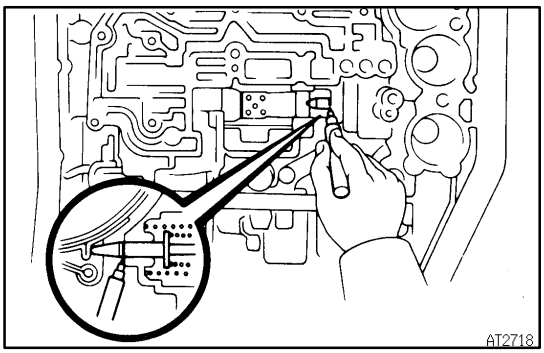

18. MEASURE PISTON STROKE OF SECOND COAST BRAKE

(a) Apply a small amount of paint to the piston rod at the point it meets the case.

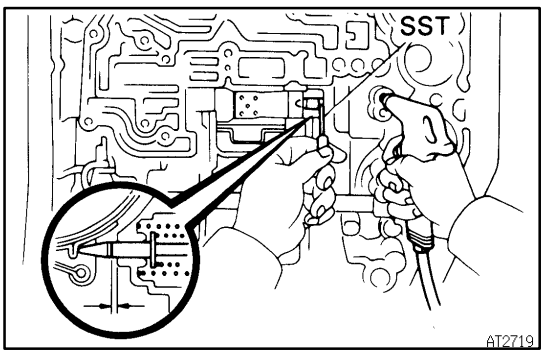

(b) Using SST, measure the piston stroke while applying and releasing compressed air (392 – 785 kPa, 4 – 8 kgf/cm^2, 57 – 114 psi).

SST 09240–00020

Piston stroke:

1.5 – 3.0 mm (0.059 – 0.118 in.)

If the piston stroke exceeds the limit, replace the piston rod or brake band.

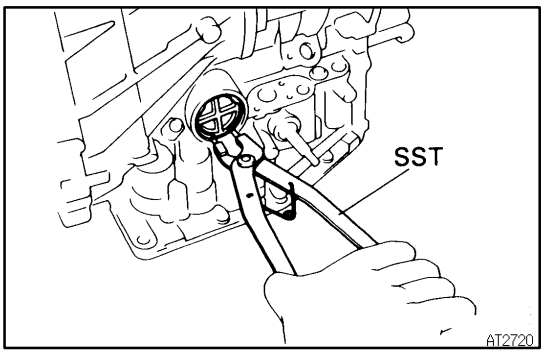

19. REMOVE SECOND COAST BRAKE PISTON

(a) Using SST, remove the snap ring.
SST 09350–32014 (09351–32050)

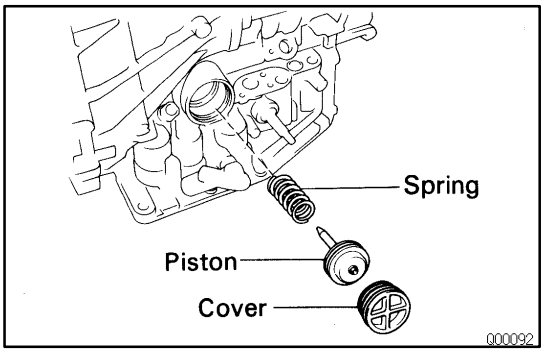

(b) Remove the cover.
(c) Remove the piston and outer return spring.
(d) Remove the O–ring from the cover.

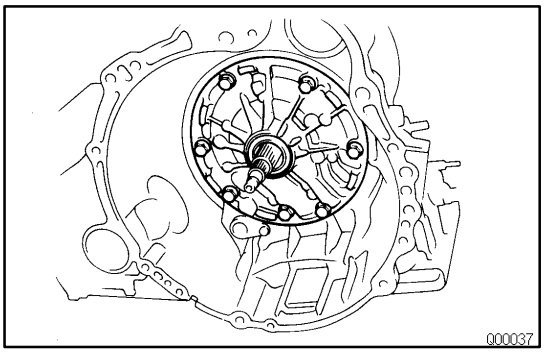

20. REMOVE OIL PUMP AND DIRECT CLUTCH

NOTICE: Before removing the oil pump, remove the second coast brake piston.

(a) Remove the 7 bolts.

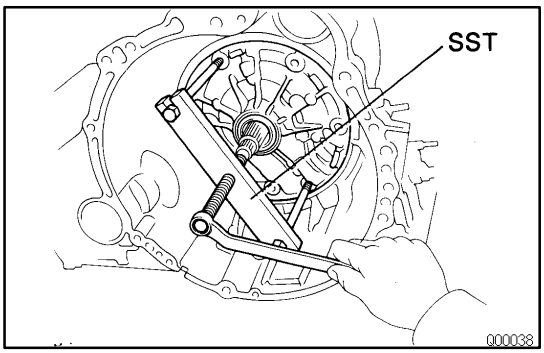

(b) Using SST, pull out the oil pump from the transaxle case.
SST 09350–32014 (09351–32061)

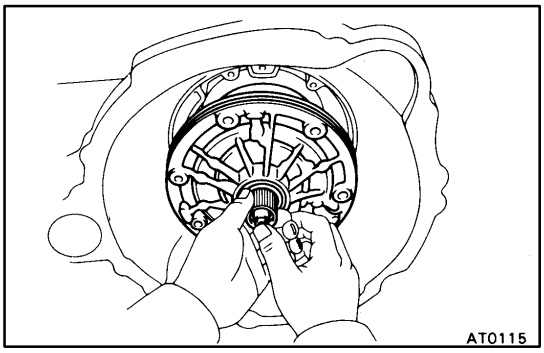

21. REMOVE OIL PUMP AND DIRECT CLUTCH

While holding the input shaft, grasp the pump stator shaft and pull the oil pump and direct clutch together out of the transaxle case.

NOTICE: Push the second coast brake band into the case, being careful not to catch it on the direct clutch drum.

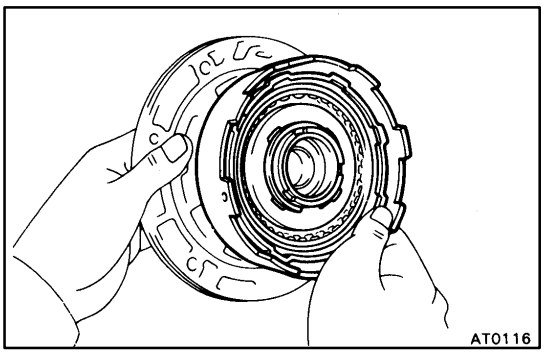

22. REMOVE DIRECT CLUTCH FROM OIL PUMP

23. BE CAREFUL WHEN REMOVING RACE BEHIND OIL PUMP

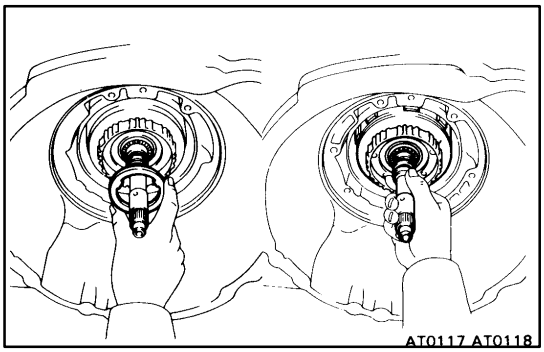

24. REMOVE CLUTCH DRUM THRUST WASHER

25. REMOVE FORWARD CLUTCH

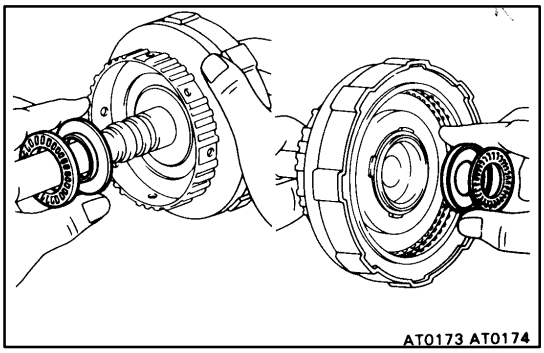

26. REMOVE BEARINGS AND RACES FROM FORWARD CLUTCH

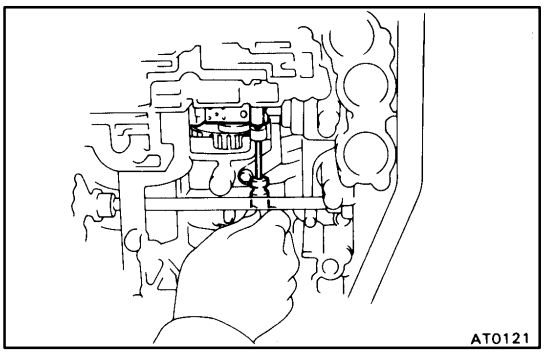

27. REMOVE SECOND COAST BRAKE BAND

(a) Push the pin with a small screwdriver and remove it from the bolt hole of the oil pump mounting.

(b) Remove the brake band.

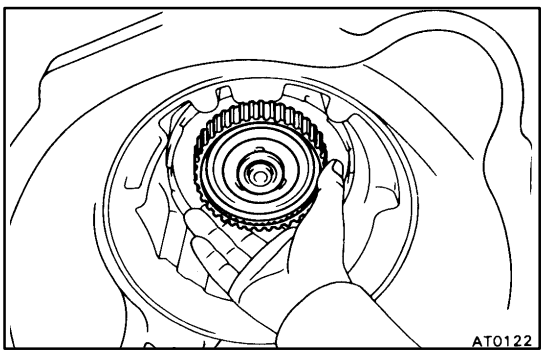

28. REMOVE FRONT PLANETARY RING GEAR

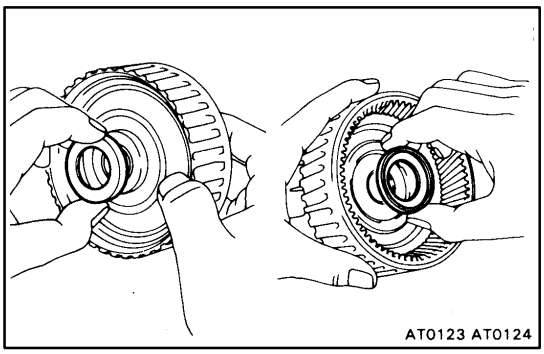

29. REMOVE BEARING RACES FROM FRONT PLANETARY RING GEAR

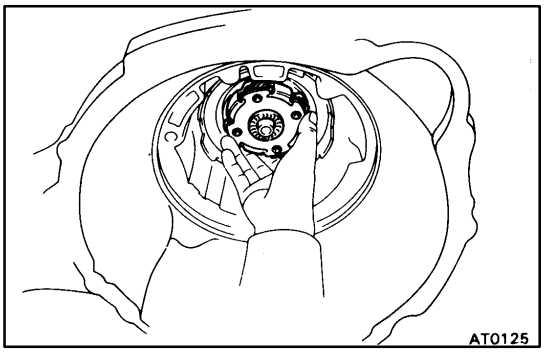

30. REMOVE PLANETARY GEAR

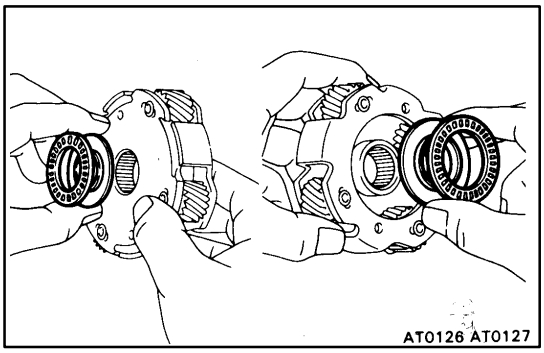

31. REMOVE RACES AND BEARINGS FROM PLANETARY GEAR

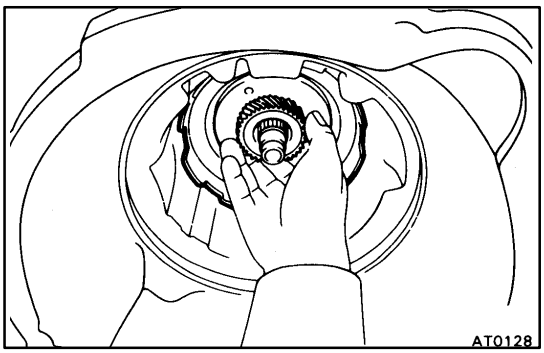

32. REMOVE SUN GEAR, SUN GEAR INPUT DRUM, SECOND BRAKE HUB AND NO.1 ONE–WAY CLUTCH

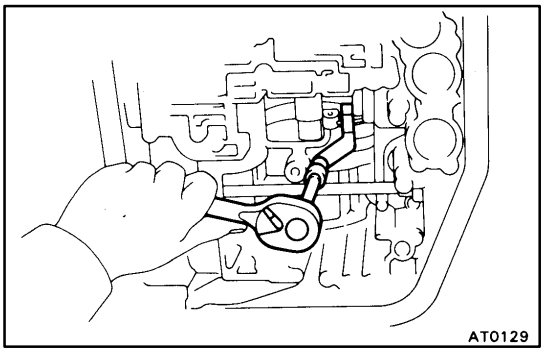

33. STAND TRANSMISSION CASE UP AND REMOVE SECOND COAST BRAKE BAND GUIDE

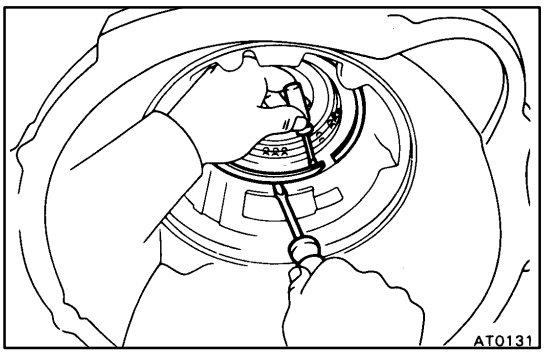

34. REMOVE SNAP RING HOLDING SECOND BRAKE DRUM TO CASE

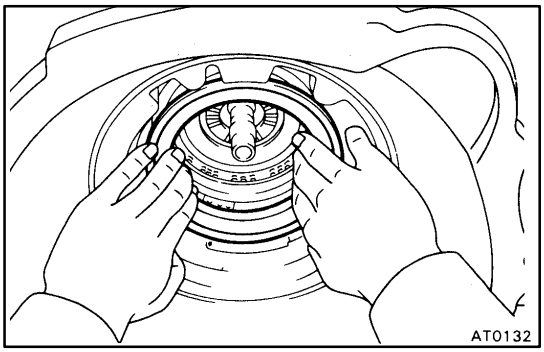

35. REMOVE SECOND BRAKE DRUM

If the brake drum is difficult to remove, lightly tap it with a wooden block.

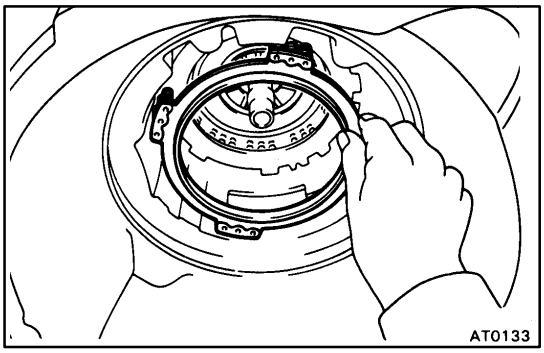

36. REMOVE SECOND BRAKE PISTON RETURN SPRING

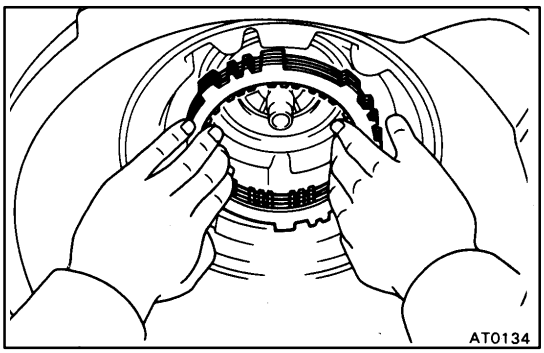

37. REMOVE PLATES, DISCS AND FLANGE

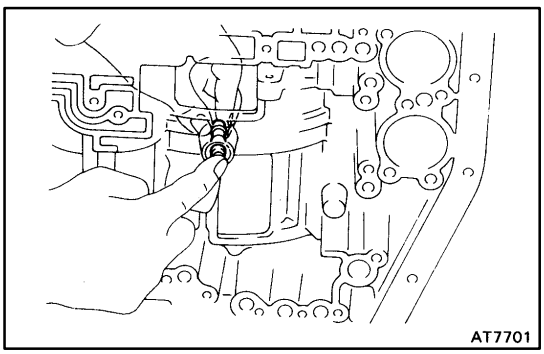

38. REMOVE SECOND BRAKE DRUM GASKET

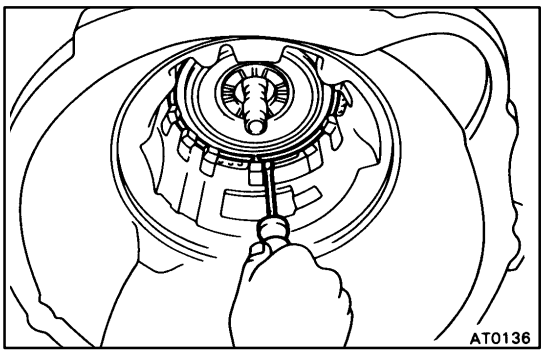

39. REMOVE SNAP RING HOLDING NO.2 ONE–WAY CLUTCH OUTER RACE TO CASE

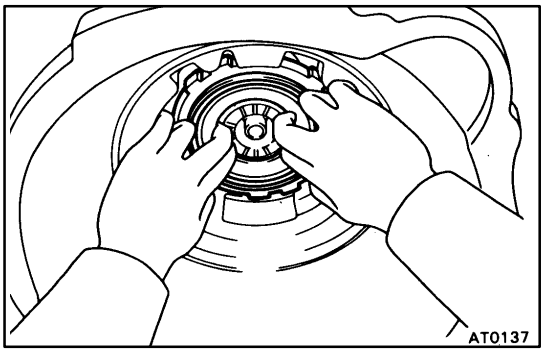

40. REMOVE NO.2 ONE–WAY CLUTCH AND REAR PLANETARY GEAR

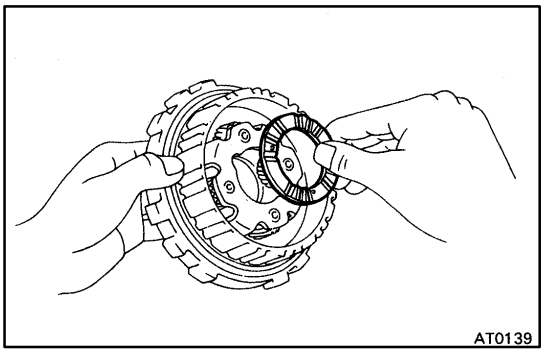

41. BE CAREFUL WHEN REMOVING THRUST WASHERS FROM BOTH SIDES OF PLANETARY CARRIER

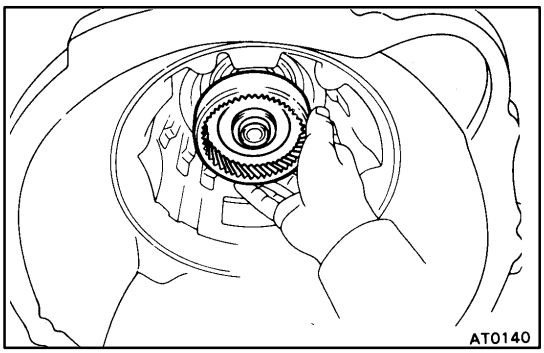

42. REMOVE REAR PLANETARY RING GEAR

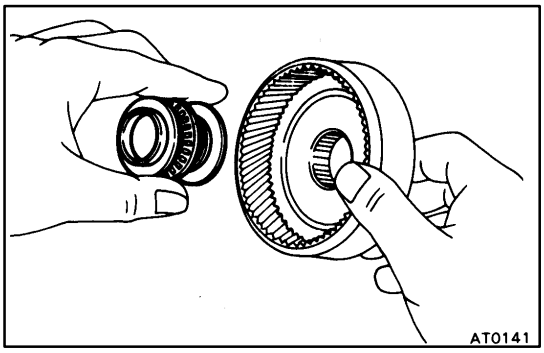

43. REMOVE BEARINGS AND RACES

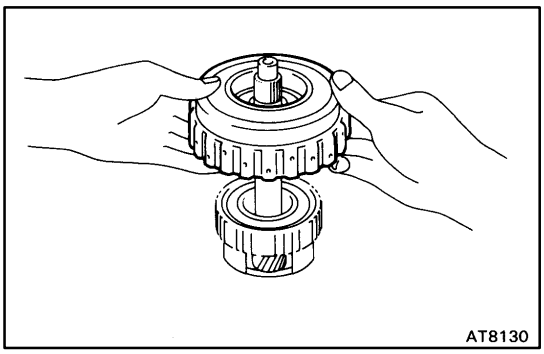

44. CHECK OPERATION OF FIRST AND REVERSE BRAKE PISTON

Apply compressed air into the case passage and confirm that the piston moves.

If the piston does not move, disassemble and inspect.

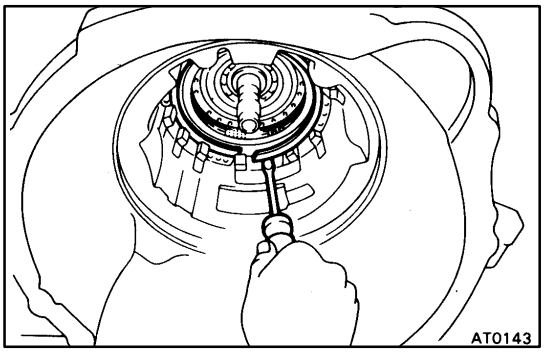

45. REMOVE SNAP RING HOLDING FLANGE TO CASE

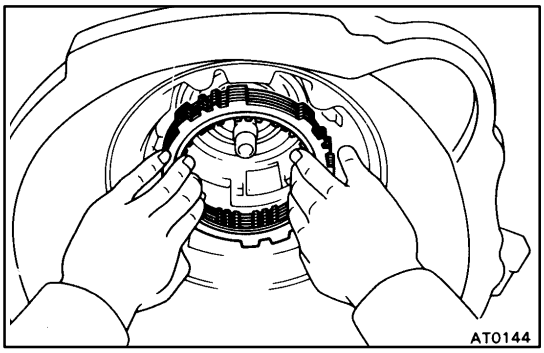

46. REMOVE FLANGES, PLATES AND DISCS

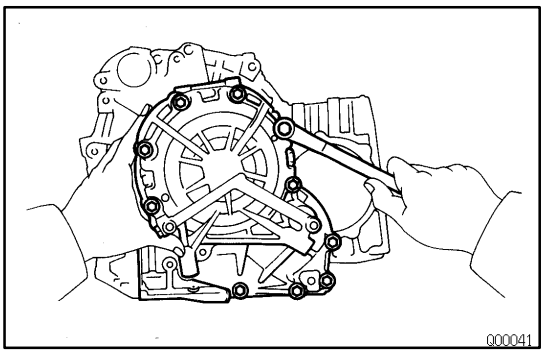

47. TURN TRANSAXLE CASE AROUND

48. REMOVE 11 BOLTS HOLDING OVERDRIVE UNIT TO TRANSAXLE CASE

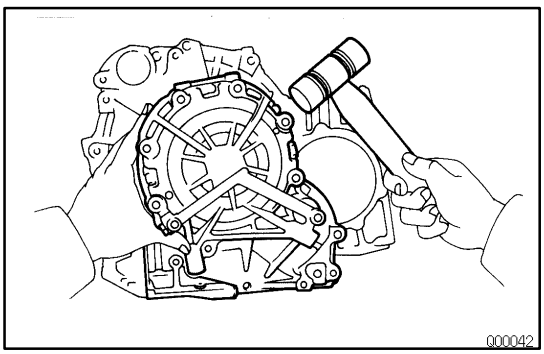

49. REMOVE OVERDRIVE UNIT WITH ALL PARTS

(a) Tap on the overdrive case circumference with a plastic hammer to remove the unit from the transaxle case.

(b) Remove the overdrive planetary gear and counter gear if they remained in the transaxle.

HINT: The overdrive unit is heavy, so be careful not to drop it.

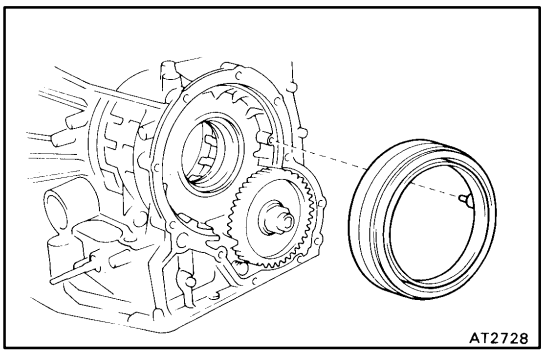

(c) Remove the overdrive brake drum from the transaxle case.

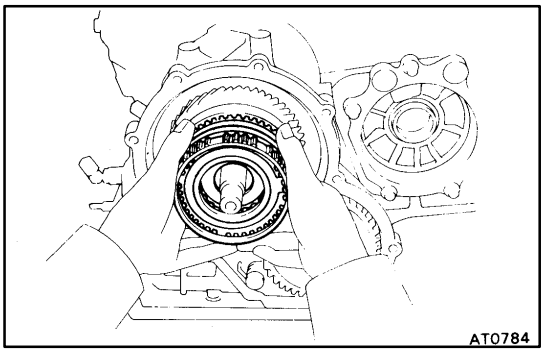

(d) Remove the overdrive planetary gear and counter gear if they remain in the transaxle.

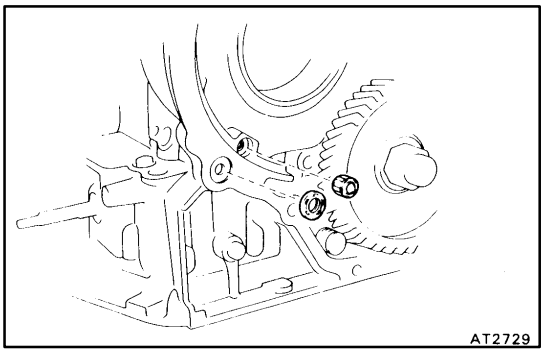

50. REMOVE OVERDRIVE CLUTCH APPLY GASKET AND OVERDRIVE BRAKEAPPLY GASKET

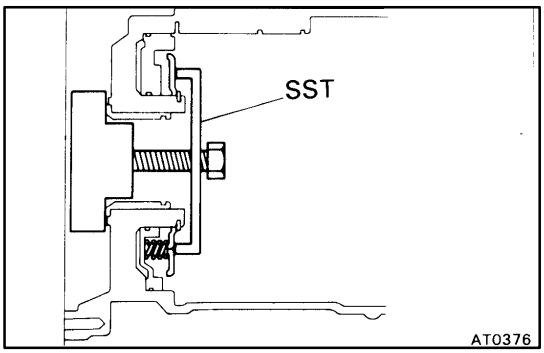

51. REMOVE PISTON RETURN SPRING

(a) Place SST, and compress the return springs evenly by tightening the bolt gradually.
SST 09350–32014 (09351–32040)

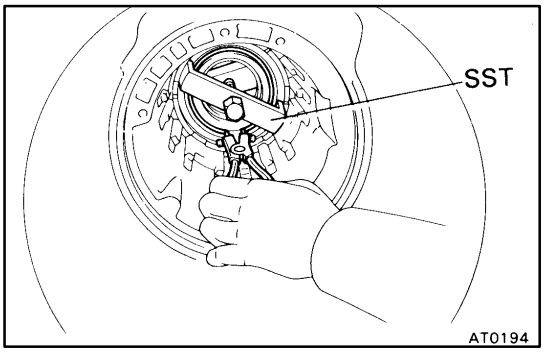

(b) Using snap ring pliers, remove the snap ring.
(c) Remove SST.
(d) Remove the return spring from the case.

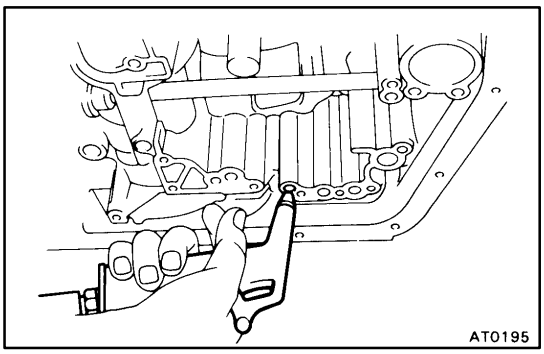

52. REMOVE FIRST AND REVERSE BRAKE PISTON

(a) Apply compressed air into the passage of the case to remove the piston.
HINT: Hold the piston so it is not slanted and blow with the gun slightly away from the oil hole.

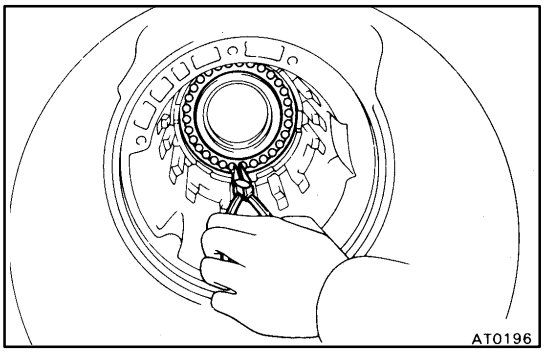

(b) If the piston does not pop out with compressed air, use needle–nose pliers to remove it.

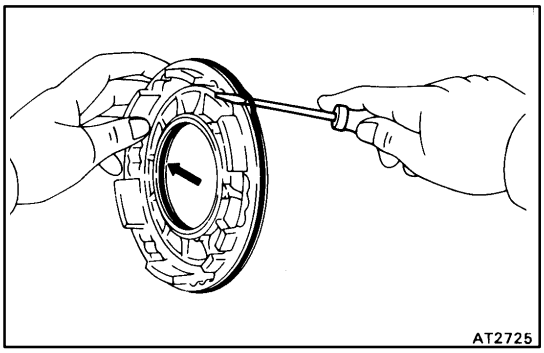

(c) Remove the 2 O–rings from the piston.

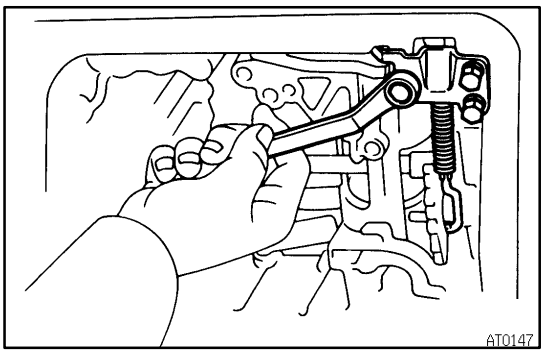

53. REMOVE PARKING LOCK PAWL BRACKET

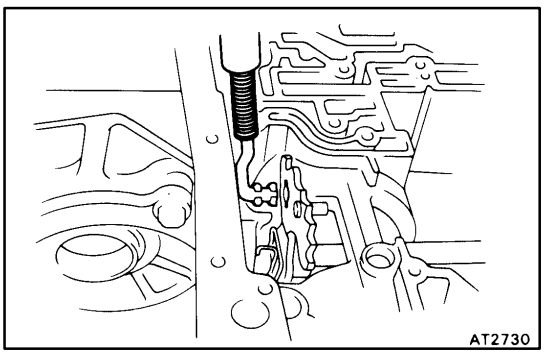

54. REMOVE PARKING LOCK ROD

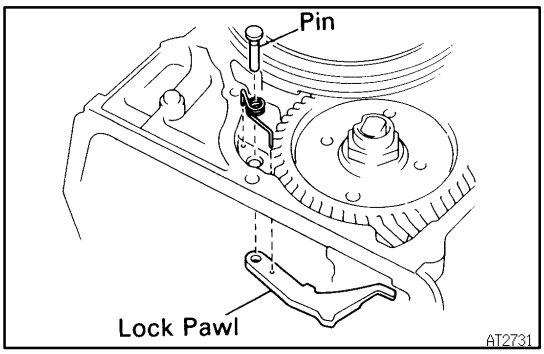

55. REMOVE PIN, SPRING AND PARKING LOCK PAWL

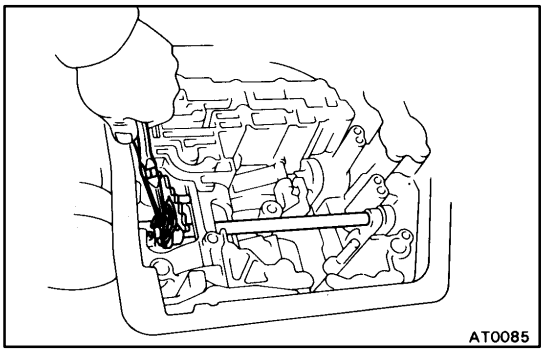

56. REMOVE MANUAL VALVE SHAFT

(a) Remove the retaining spring.

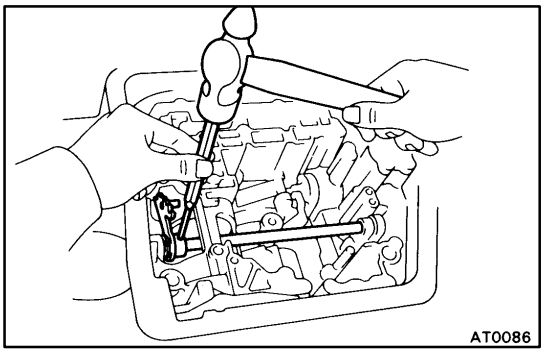

(b) Using a hammer and chisel, pry and turn the collar.

(c) Using a hammer and punch, drive out the pin.

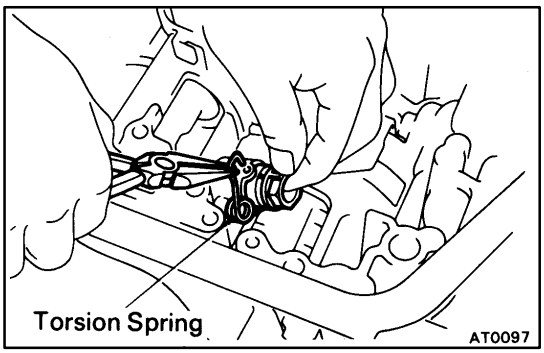

(d) Slide out the shaft and remove the manual valve lever from the case.

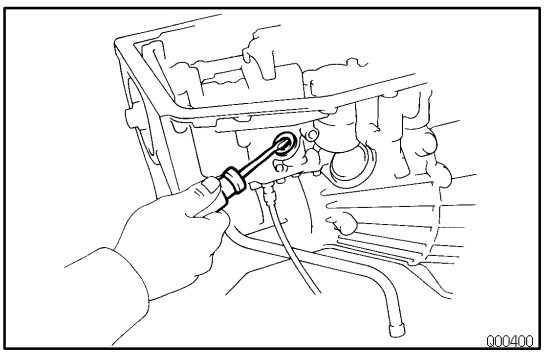

57. REMOVE MANUAL SHAFT OIL SEAL

Remove the oil seal with a screwdriver.

AX0EX–02

DISASSEMBLY OF DIFFERENTIAL

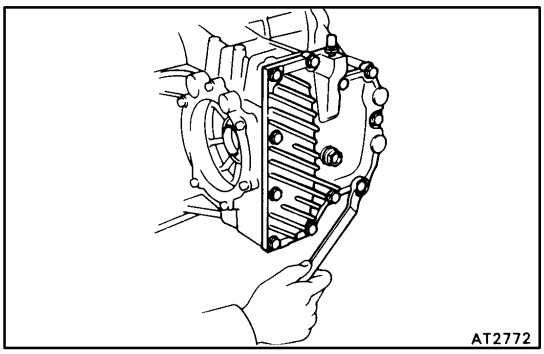

1. REMOVE CARRIER COVER

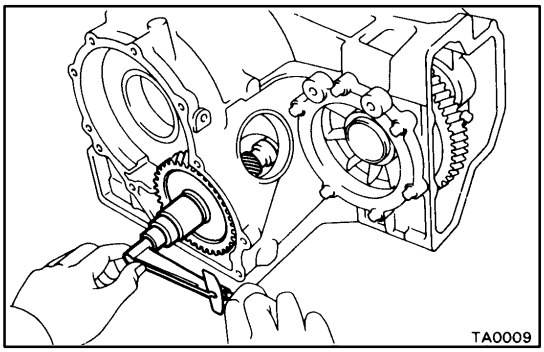

2. MEASURE TOTAL PRELOAD

Using a torque meter, measure the total preload, and note the measurement value.

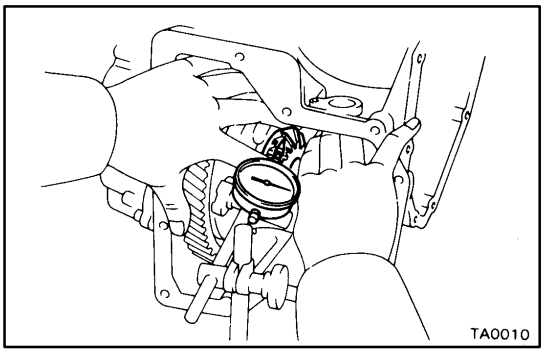

3. MEASURE BACKLASH OF SIDE GEAR

Measure each side gear backlash while holding one pinion toward the case.

Standard backlash:

0.05 – 0.20 mm (0.0020 – 0.0079 in.)

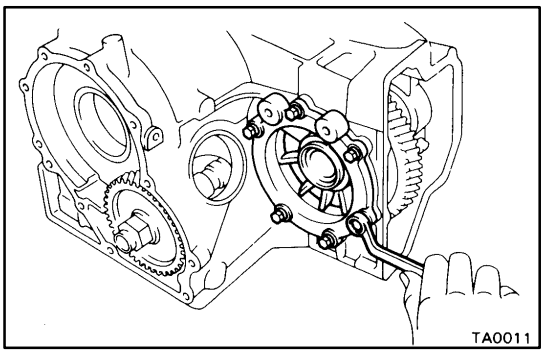

4. REMOVE LH BEARING RETAINER

(a) Remove the 6 bolts.
(b) Tap the retainer with a plastic hammer to remove it.
(c) Remove the O–ring from the retainer.

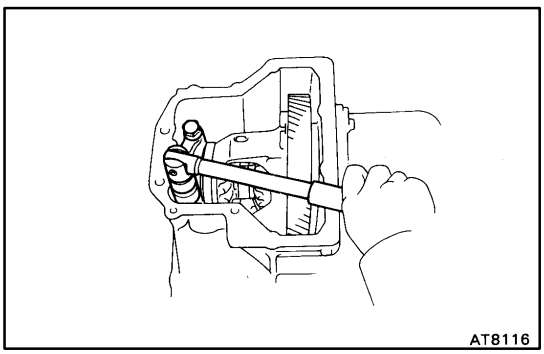

5. REMOVE RH SIDE BEARING CAP

Remove the 2 bolts and the side bearing cap.

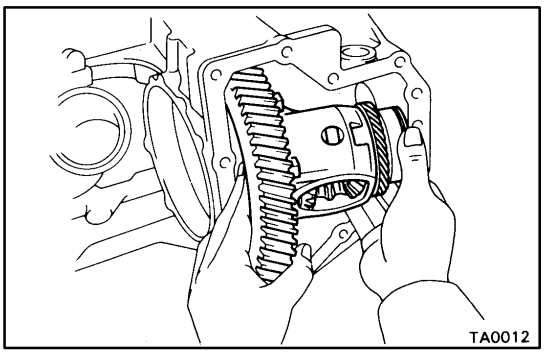

6. REMOVE DIFFERENTIAL CASE, OUTER RACE AND ADJUSTING SHIM

Remove the differential case, the outer race and the adjusting shim from the case.

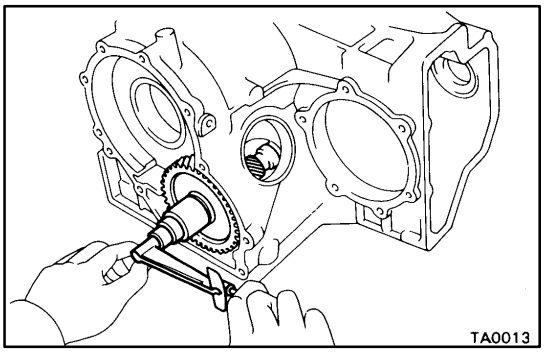

7. MEASURE DRIVE PINION PRELOAD

Using a torque meter, measure the drive pinion preload.

Preload (at starting):

Reused bearing

0.5 – 0.8 N·m (5 – 8 kgf·cm, 4.3 – 6.9 in.·lbf)

The total preload measured in step 2 minus the drive pinion preload equals 0.1 – 0.2 N·m (1.5 – 2.0 kgf·cm, 1.3 – 1.7in.·lbf).

If the result is not within this specification, the side bearing preload is bad.

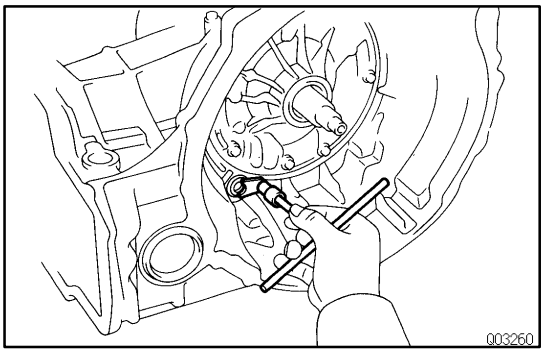

8. REMOVE DRIVE PINION CAP

(a) Remove the drive pinion cap installation bolt.

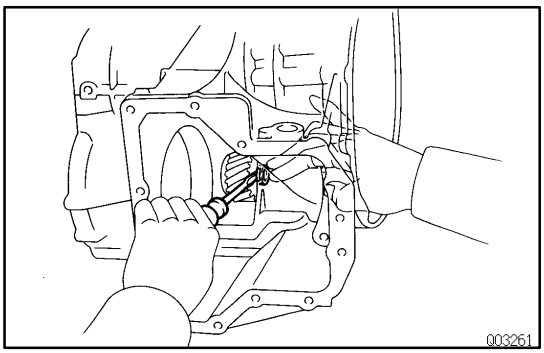

(b) Using a screwdriver, push out the drive pinion cap.

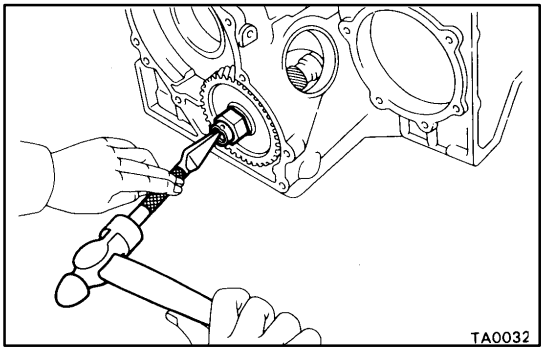

9. REMOVE COUNTER DRIVEN GEAR

(a) Using a chisel, loosen the staked part of the nut.

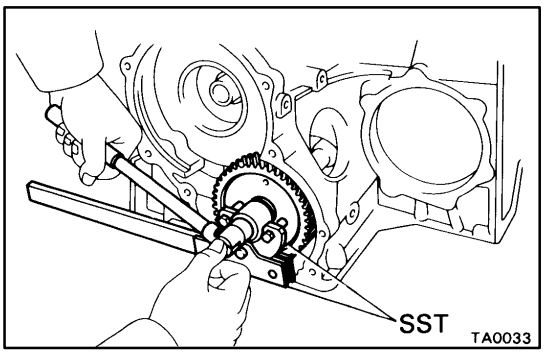

(b) Install SST onto the gear.
SST 09350–32014 (09351–32032)
(c) Using SST to hold the gear, remove the nut.
SST 09330–00021

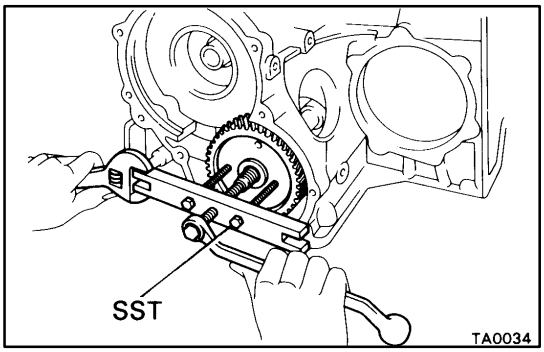

(d) Using SST, remove the gear and bearing.
SST 09350–32014 (09351–32061)

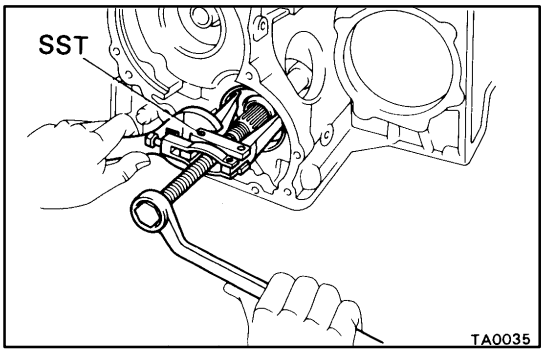

10. REMOVE OUTER RACE FROM CASE
Using SST, remove the outer race.
SST 09350–32014 (09308–10010)

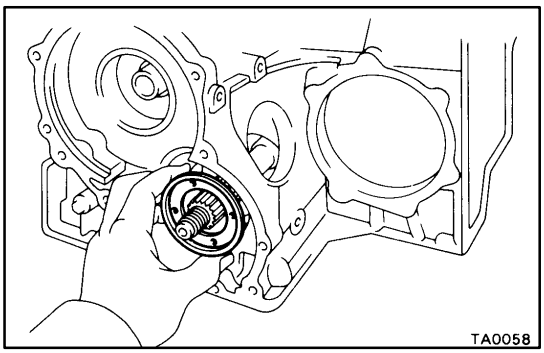

11. REMOVE OIL SLINGER

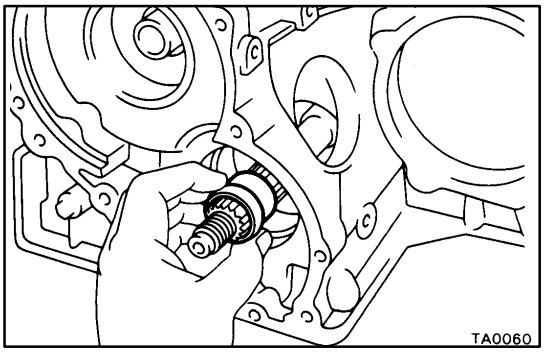

12. REMOVE SPACER

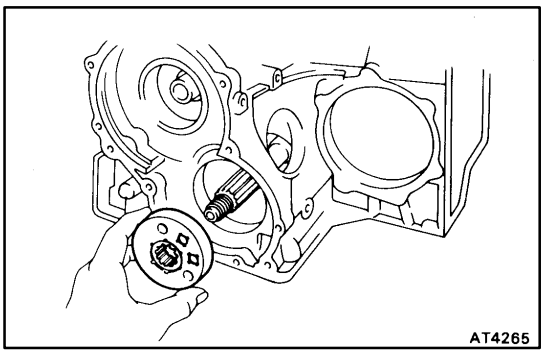

13. REMOVE ROTOR SENSOR

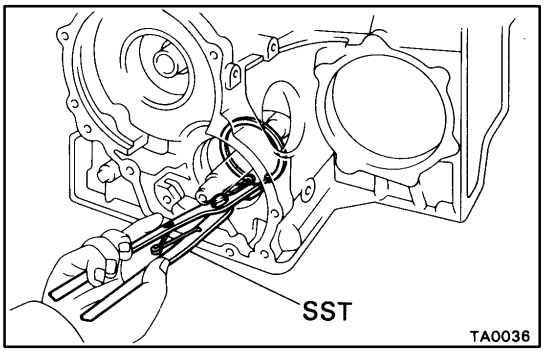

14. REMOVE DRIVE PINION

(a) Using SST, remove the snap ring.
SST 09350–32014 (09351–32050)

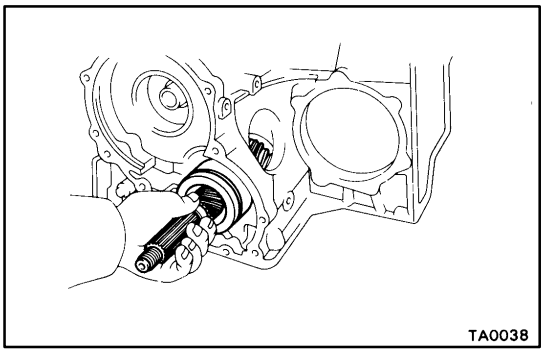

(b) Install a brass bar into case hole to tap out the drive pinion.

(c) Tap the drive pinion and remove the bearing cage from the bore.

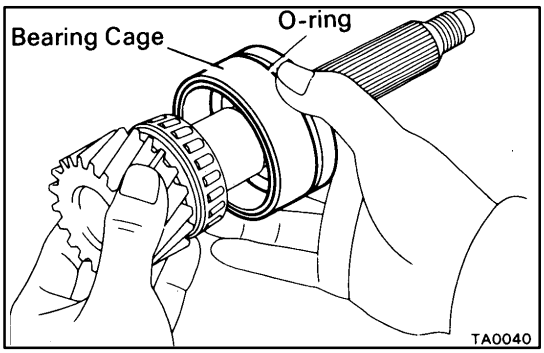

15. REMOVE BEARING CAGE FROM DRIVE PINION

16. REMOVE O–RING FROM BEARING CAGE

COMPONENT PARTS

AX0EY–02

GENERAL NOTES

The instructions here are organized so that you work on only one component group at a time.
This will help avoid confusion from similar–looking parts of different subassemblies being on your workbench at the same time.
The component groups are inspected and repaired from the converter housing side.
As much as possible, complete the inspection, repair and assembly before proceeding to the next component group. If a component group cannot be assembled because parts are being ordered, be sure to keep all parts of that group in a separate container while proceeding with disassembly, inspection, repair and assembly of other component groups.

Recommended fluid for the automatic transaxle:

DEXRON ® @@@@@: [g 2]

GENERAL CLEANING NOTES:

1. All disassembled parts should be washed clean and any fluid passages and holes blown through with compressed air.
2. When using compressed air to dry parts, always aim away from yourself to prevent accidentally spraying automatic transmission fluid or kerosene in your face.
3. The recommended automatic transaxle fluid or kerosene should be used for cleaning.

PARTS ARRANGEMENT:

1. After cleaning, the parts should be arranged in the correct order to allow efficient inspection, repairs, and reassembly.
2. When disassembling a valve body, be sure to keep each valve together with the corresponding spring.
3. New brakes and clutches that are to be used for replacement must be soaked in transaxle fluid for at least 15 minutes before assembly.

GENERAL ASSEMBLY:

1. All oil seal rings, clutch discs, clutch plates, rotating parts, and sliding surfaces should be coated with transmission fluid prior to reassembly.
2. All gaskets and rubber O–rings should be replaced.
3. Make sure that the ends of a snap ring are not aligned with one of the cutouts and are installed in the groove correctly.
4. If a worn bushing is to be replaced, the subassembly containing that bushing must be replaced.
5. Check thrust bearings and races for wear or damage. Replace if necessary.
6. Use petroleum jelly to keep parts in place.

SECOND COAST BRAKE

AX0EZ–02

COMPONENTS

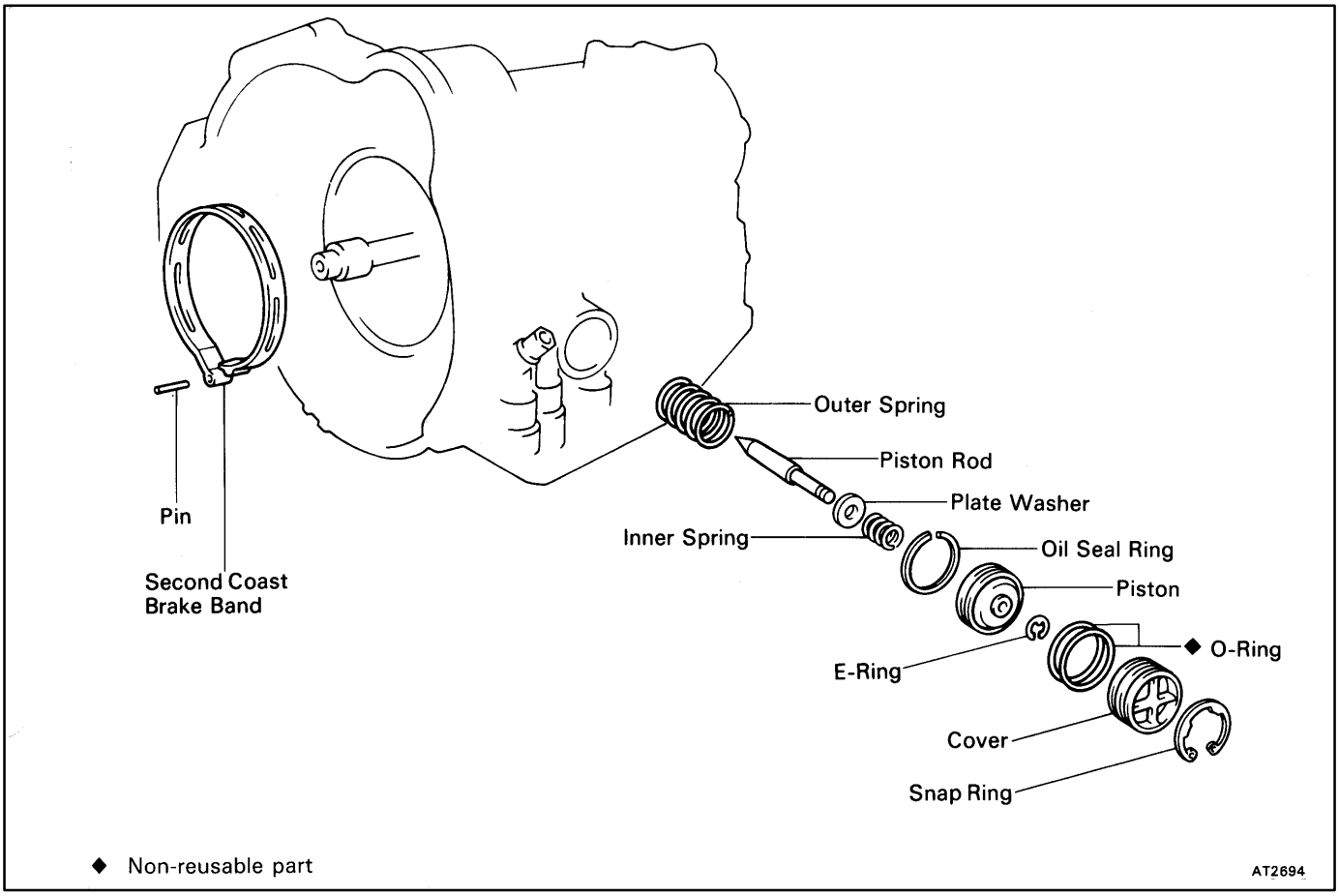

AX0F0–02

SECOND COAST BRAKE PISTON DISASSEMBLY

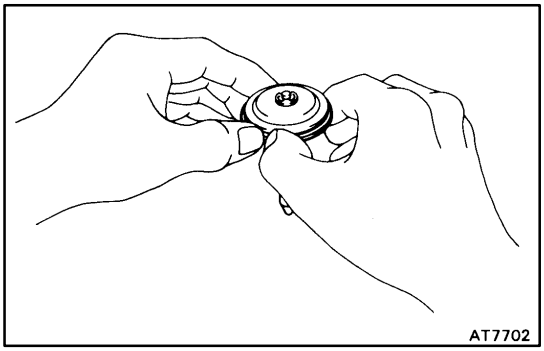

1. REMOVE OIL SEAL RING

Remove the oil seal ring from the piston.

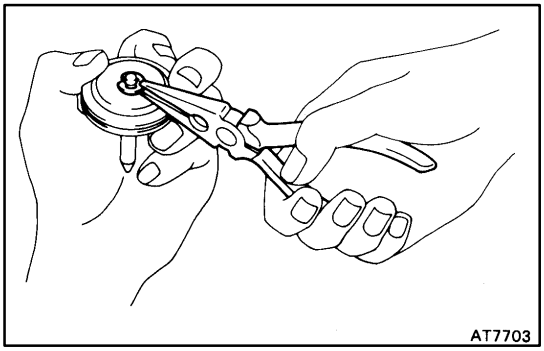

2. REMOVE PISTON ROD

(a) Remove the E–ring while pushing the piston with needle–nose pliers.

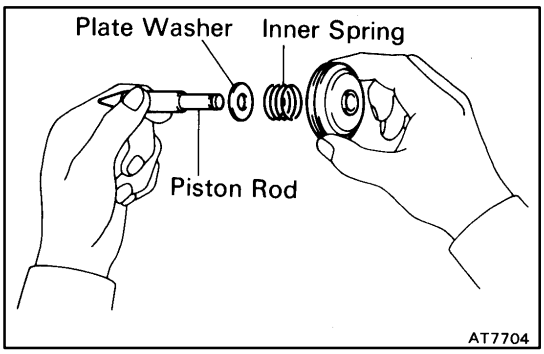

(b) Remove the spring, washer and piston rod.

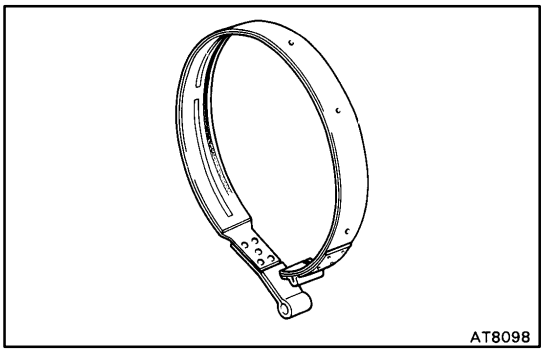

AX0F1–02

SECOND COAST BRAKE INSPECTION

INSPECT BRAKE BAND

If the lining of the brake band is peeling off or discolored, or even if a part of the printed numbers are defaced, replace the brake band.

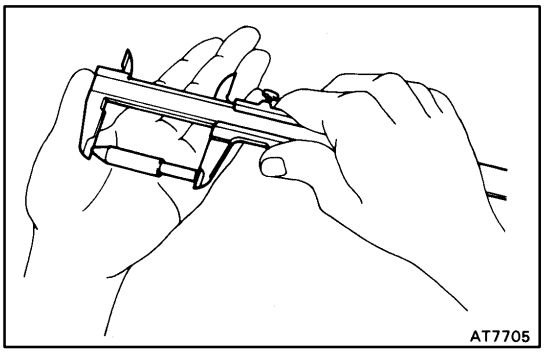

AX0F2–02

SECOND COAST BRAKE PISTON ASSEMBLY

1. SELECT PISTON ROD

If the band is OK, but the piston stroke is not within the standard value, select a new piston rod.

Piston stroke:

1.5 – 3.0 mm (0.059 – 0.118 in.)

There are 2 lengths of piston rod.

Piston rod length:

72.9 mm (2.870 in.)

71.4 mm (2.811 in.)

2. INSTALL PISTON ROD

(a) Install the washer and spring to the piston rod.

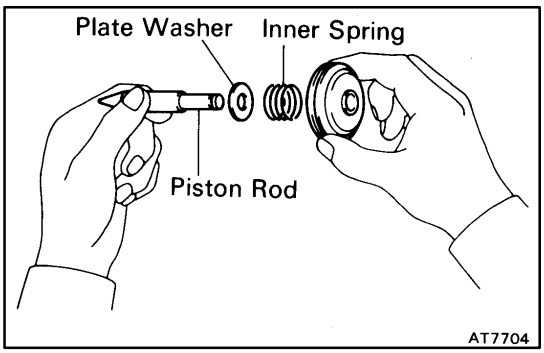

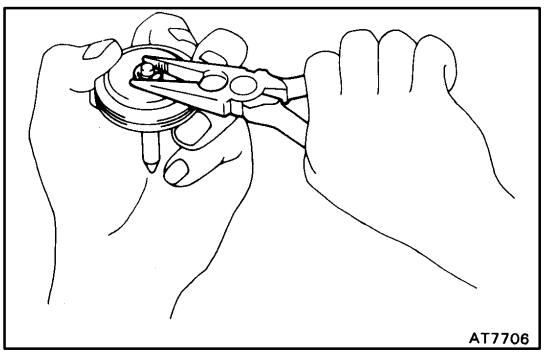

(b) Install an E–ring while pushing the piston.

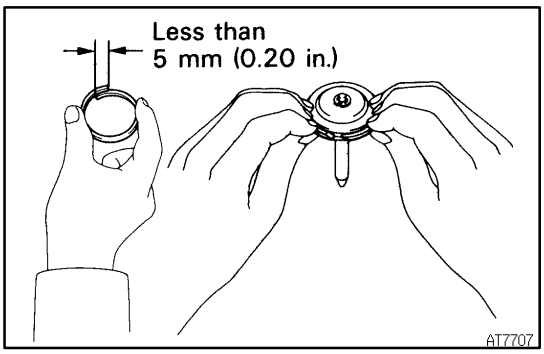

3. INSTALL OIL SEAL RING

(a) Apply ATF to the oil seal ring.

(b) Install the oil seal ring to the piston.

NOTICE: Do not spread the ring ends more than necessary.

OIL PUMP
COMPONENTS

AX0F3–02

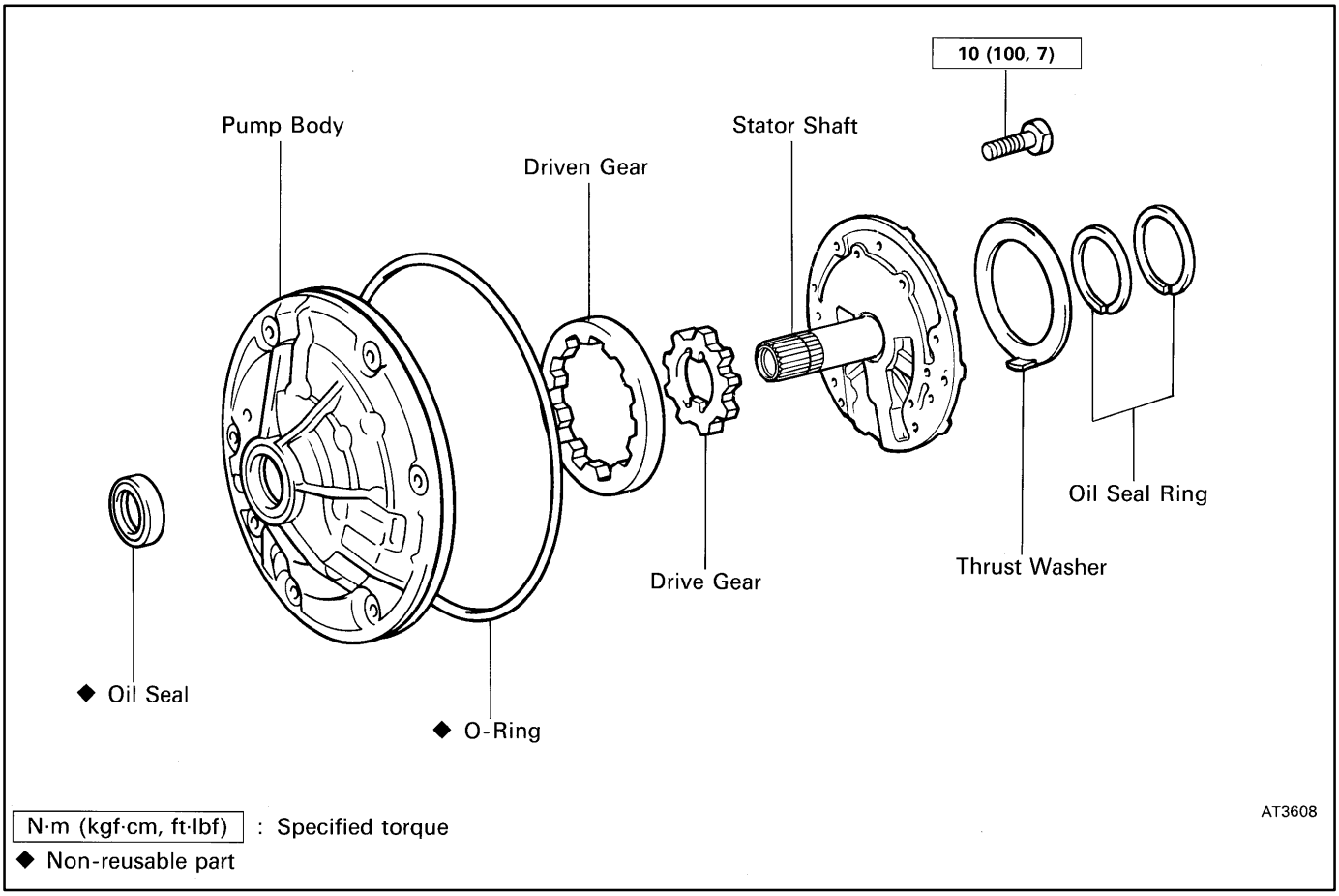

N·m (kgf·cm, ft·lbf) : Specified torque
◆ Non-reusable part

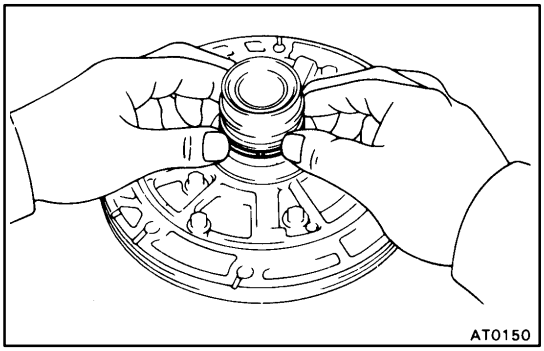

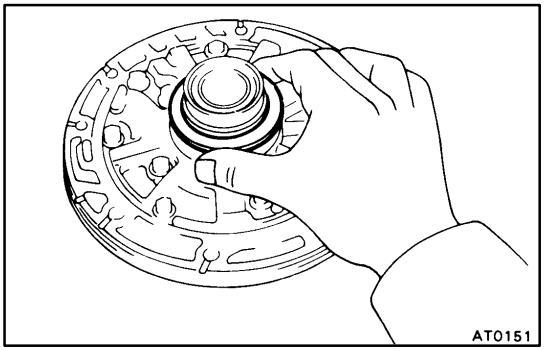

AX0F4–02

OIL PUMP DISASSEMBLY

1. REMOVE OIL SEAL RINGS

Remove the 2 oil seal rings from the stator shaft back side.

2. REMOVE THRUST WASHER FROM STATOR SHAFT BACK SIDE

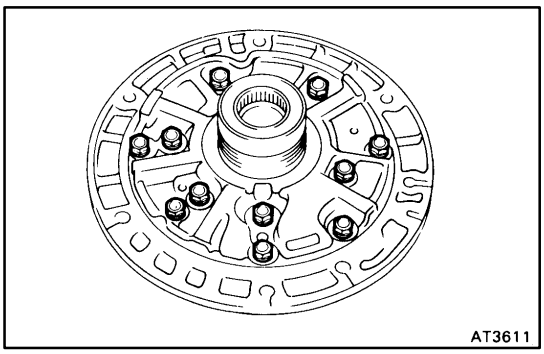

3. REMOVE STATOR SHAFT

Remove the 11 bolts and stator shaft.

Keep the gears in assembly order.

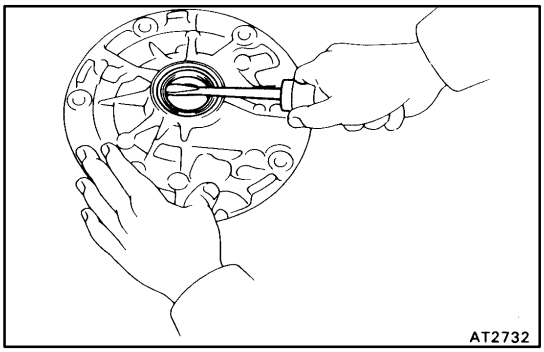

4. REMOVE FRONT OIL SEAL

Pry off the oil seal with a screwdriver.

AX0F5–02

OIL PUMP BUSHING INSPECTION

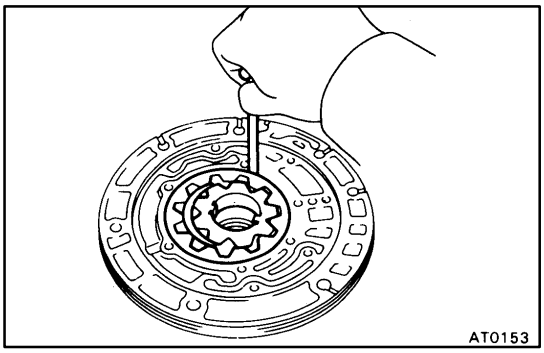

1. CHECK BODY CLEARANCE OF DRIVEN GEAR

Push the driven gear to one side of the body.

Using a feeler gauge, measure the clearance.

Standard body clearance:

0.07 – 0.15 mm (0.0028 – 0.0059 in.)

Maximum body clearance:

0.3 mm (0.012 in.)

If the body clearance is greater than the maximum, replace the oil pump body subassembly.

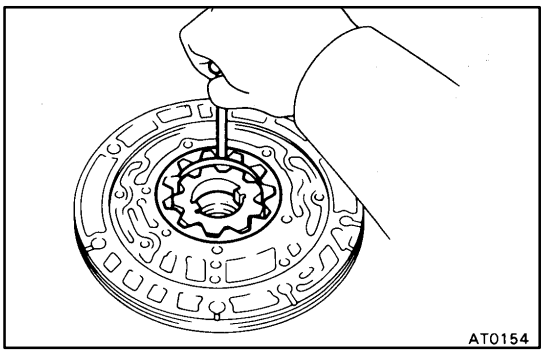

2. CHECK TIP CLEARANCE OF DRIVEN GEAR

Measure between the driven gear teeth and the crescent–shaped part of the pump body.

Standard tip clearance:

0.11 – 0.14 mm (0.0043 – 0.0055 in.)

Maximum tip clearance:

0.3 mm (0.012 in.)

If the tip clearance is greater than the maximum, replace the oil pump body subassembly.

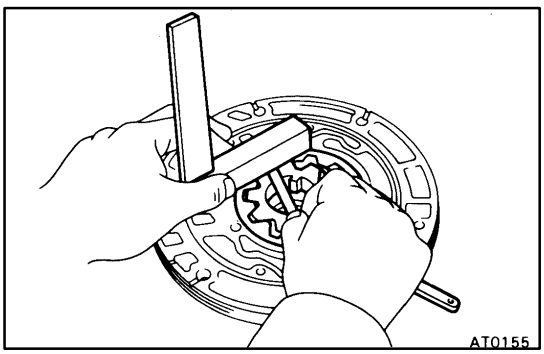

3. CHECK SIDE CLEARANCE OF BOTH GEARS

Using a steel straightedge and a feeler gauge, measure the side clearance of both gears.

Standard side clearance:

0.02 – 0.05 mm (0.0008 – 0.0020 in.)

Maximum side clearance:

0.1 mm (0.004 in.)

There are 3 different thicknesses for drive and driven gears.

Drive and driven gear thickness

Mark	Thickness mm (in.)
A	9.440 – 9.456 (0.3717 – 0.3723)
B	9.456 – 9.474 (0.3723 – 0.3730)
C	9.474 – 9.490 (0.3730 – 0.3736)

If the thickest gear cannot make the side clearance within standard specification, replace the oil pump body subassembly.

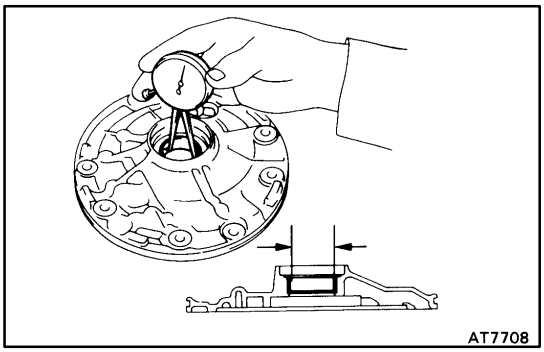

4. CHECK OIL PUMP BODY BUSHING

Using a dial indicator, measure the inside diameter of the oil pump body bushing.

Maximum inside diameter:

38.18 mm (1.5031 in.)

If the inside diameter is greater than the maximum, replace the oil pump body subassembly.

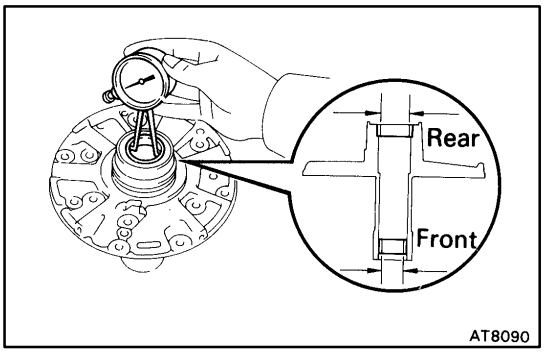

5. CHECK STATOR SHAFT BUSHINGS

Using a dial indicator, measure the inside diameter of the stator shaft bushings.

Maximum inside diameter:

Front side

21.57 mm (0.8492 in.)

Rear side

27.07 mm (1.0657 in.)

If the inside diameter is greater than the maximum, replace the stator shaft.

AX0F6–02

OIL PUMP ASSEMBLY

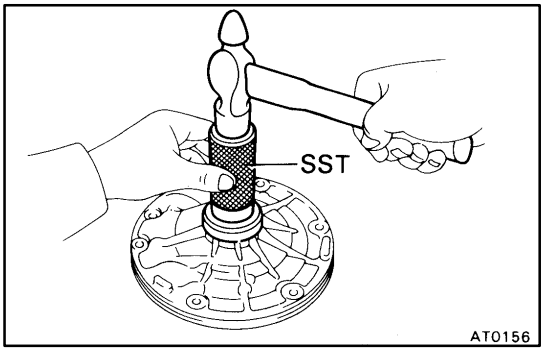

1. INSTALL FRONT OIL SEAL

Using SST and a hammer, install a new oil seal. The seal end should be flush with the outer edge of the pump body.

SST 09350–32014 (09351–32140)

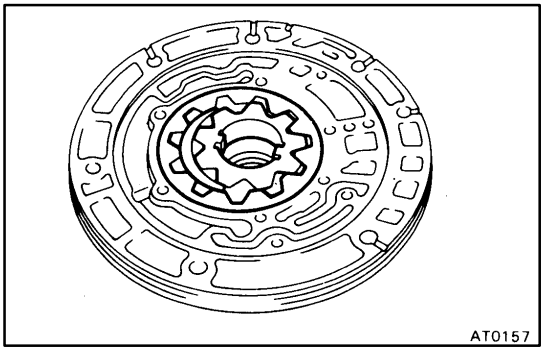

2. INSTALL DRIVEN GEAR AND DRIVE GEAR

Make sure the top of the gears are facing upward.

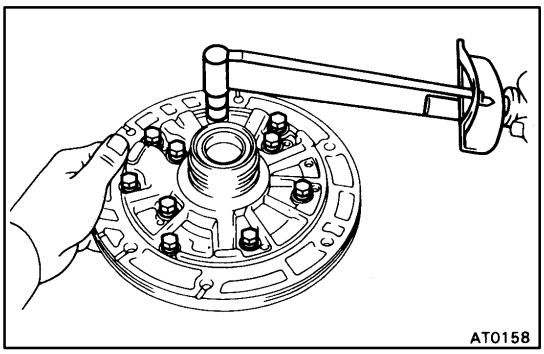

3. INSTALL STATOR SHAFT ONTO PUMP BODY

Align the stator shaft with each bolt hole.

4. TIGHTEN 11 STATOR SHAFT BOLTS

Torque: 10 N·m (100 kgf·cm, 7 ft·lbf)

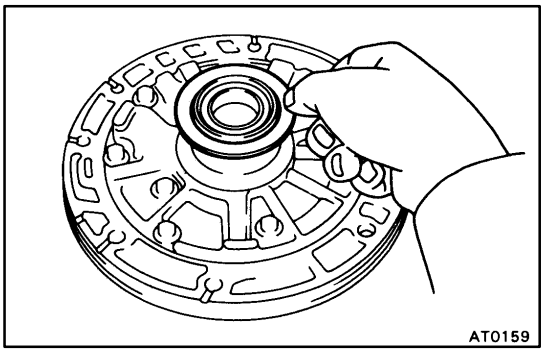

5. INSTALL THRUST WASHER

(a) Coat the thrust washer with petroleum jelly.

(b) Align the tab of the washer with the hollow of the pump body.

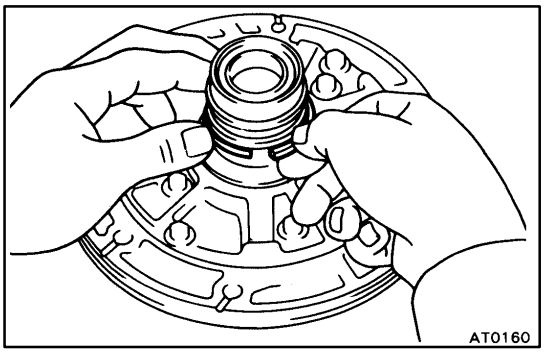

6. INSTALL 2 OIL SEAL RINGS ON OIL PUMP

Install 2 oil seal rings to the stator shaft groove, then snug them down by squeezing their ends together.

NOTICE: Do not spread the ring ends too much.

HINT: After installing the oil seal rings, check that they move smoothly.

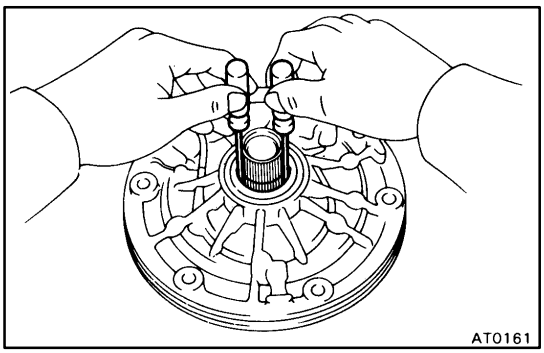

7. CHECK PUMP DRIVE GEAR ROTATION

Turn the drive gear with screwdrivers and make sure that it rotates smoothly.

NOTICE: Be careful not to damage the oil seal lip.

DIRECT CLUTCH

AX0GT–02

COMPONENTS

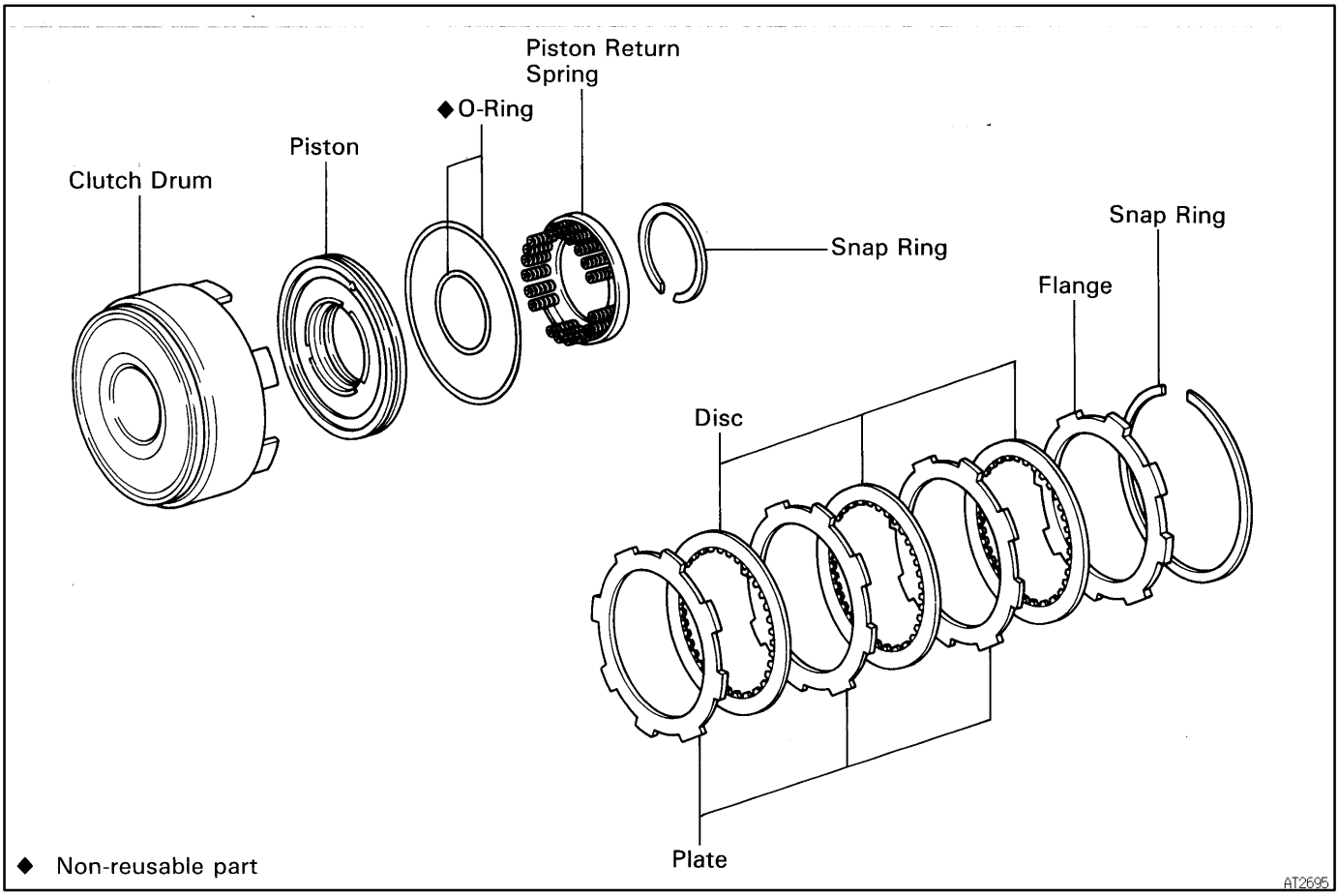

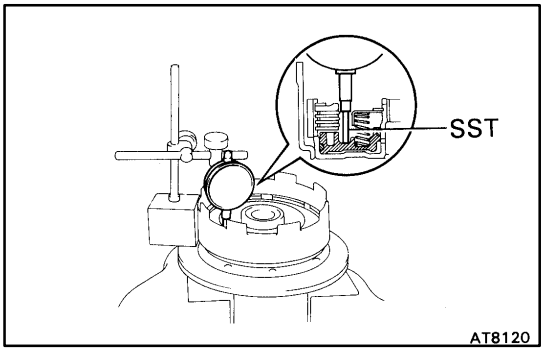

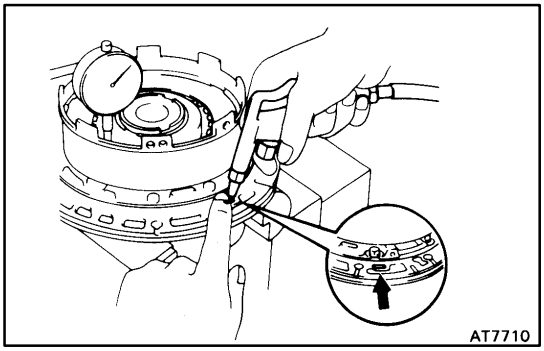

AX0F7–02

DIRECT CLUTCH DISASSEMBLY

1. CHECK PISTON STROKE OF DIRECT CLUTCH

(a) Install the direct clutch on the oil pump.

(b) Set a dial indicator and measuring terminal (SST) together, measure the direct clutch piston stroke while applying and releasing compressed air (392 – 785 kPa, 4 – 8 kgf/cm^2, 57 – 114 psi).

SST 09350–32014 (09351–32190)

Piston stroke:

1.11 – 1.44 mm (0.0437 – 0.0567 in.)

If the piston stroke is greater than the maximum inspect each component.

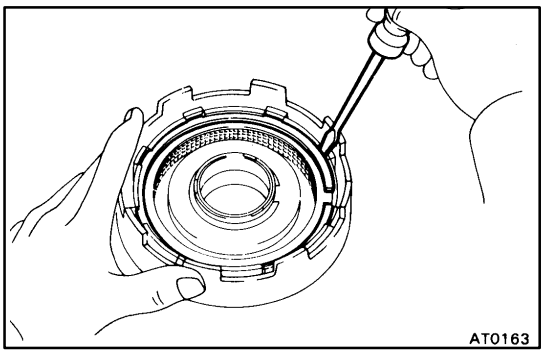

2. REMOVE SNAP RING FROM CLUTCH DRUM

3. REMOVE FLANGE, DISCS AND PLATES

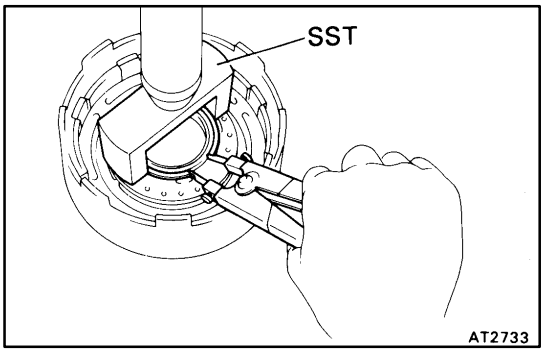

4. REMOVE PISTON RETURN SPRING

(a) Place SST on the spring retainer and compress the springs with a shop press.
SST 09350–32014 (09351–32070)

(b) Remove the snap ring with the snap ring pliers.

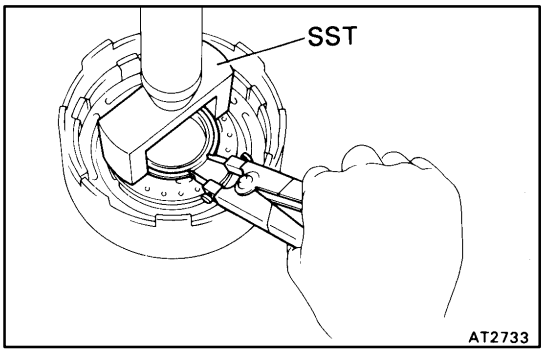

(c) Remove the piston return spring.

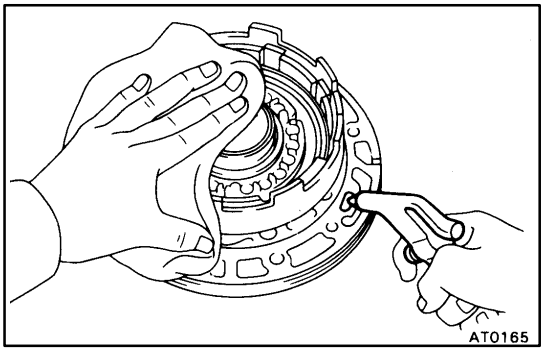

5. REMOVE CLUTCH PISTON

(a) Install the direct clutch onto the oil pump.

(b) Apply compressed air to the oil pump to remove the piston. (if the piston does not come out completely, use needle–nose pliers to remove it).

(c) Remove the direct clutch from the oil pump.

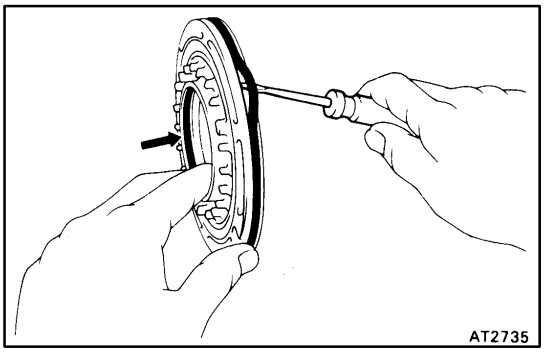

(d) Remove the 2 O–rings from the piston.

AX0F8–02

DIRECT CLUTCH INSPECTION

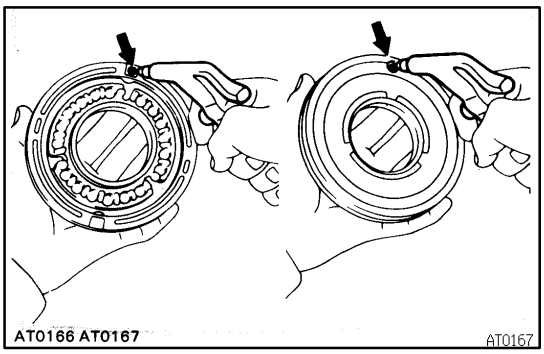

1. INSPECT CLUTCH PISTON

(a) Check that the check ball is free by shaking the piston.
(b) Check that the valve does not leak by applying lowpressure compressed air.

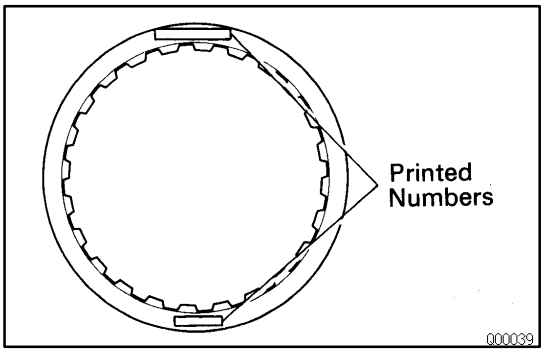

2. INSPECT DISCS, PLATES AND FLANGE

Check if the sliding surfaces of the discs, plates and flange are worn or burnt. If necessary, replace them.
HINT:

- If the lining of the disc is peeling off or discolored, or even if a part of the printed numbers are defaced, replace all discs.
- Before assembling new discs, soak them in ATF for at least 15 minutes.

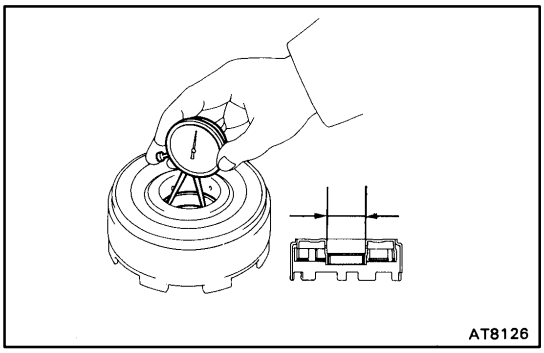

3. CHECK DIRECT CLUTCH BUSHING

Using a dial indicator, measure the inside diameter of the direct clutch bushing.
Maximum inside diameter:

47.07 mm (1.8531 in.)

If the inside diameter is greater than the maximum, replace the direct clutch.

AX0F9–02

DIRECT CLUTCH ASSEMBLY

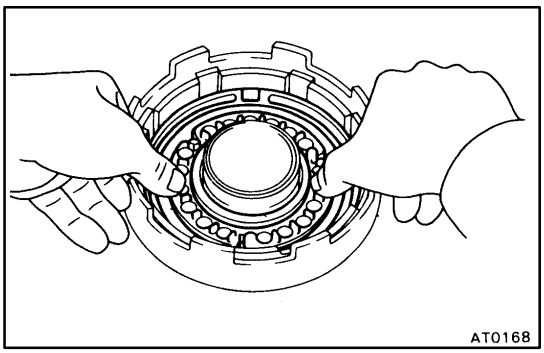

1. INSTALL CLUTCH PISTON IN DIRECT CLUTCH DRUM

(a) Install new O–rings to the piston. Coat the O–rings with ATF.
(b) Being careful not to damage the O–rings, press the piston into the drum with the cup side up.

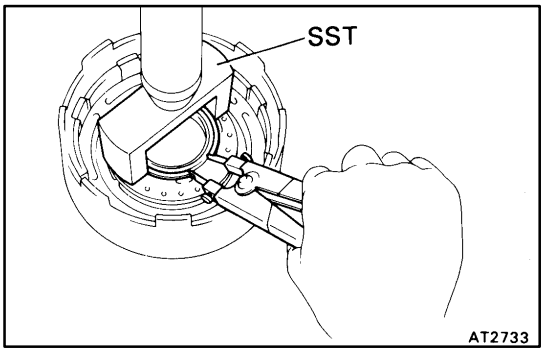

2. INSTALL PISTON RETURN SPRING

(a) Place the return spring and snap ring onto the piston.
(b) Place SST on the spring retainer, and compress the return spring with a shop press.
SST 09350–32014 (09351–32070)
(c) Install the snap ring with the snap ring pliers. Be sure the end gap of snap ring is not aligned with the spring retainer claw.

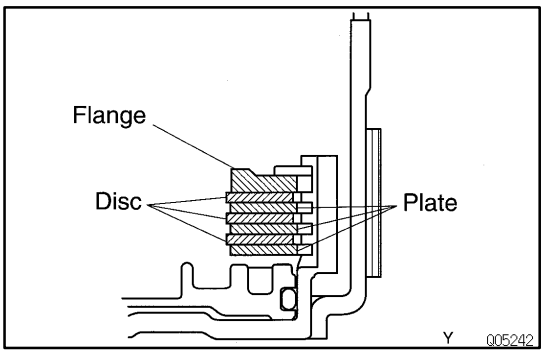

3. INSTALL PLATES, DISCS AND FLANGE

(a) Install plates and discs.
Install in order: P=Plate D=Disc
P – D – P – D – P – D

(b) Install the flange with the flat end facing downward.

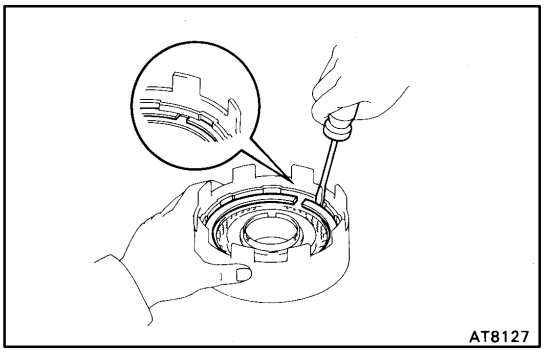

4. INSTALL SNAP RING

Check that the end gap of the snap ring is not aligned with one of the cutouts.

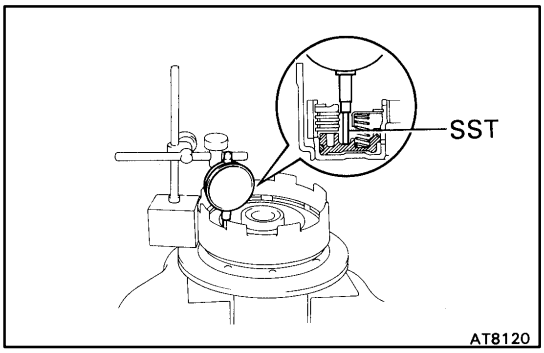

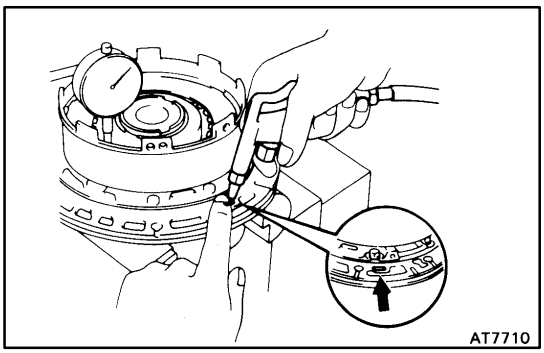

5. RECHECK PISTON STROKE OF DIRECT CLUTCH

(a) Install the direct clutch on the oil pump.

(b) Set a dial indicator and measuring terminal (SST) together, measure the direct clutch piston stroke while applying and releasing compressed air (392 – 785 kPa, 4 – 8 kgf/cm^2, 57 – 114 psi).
SST 09350–32014 (09351–32190)
Piston stroke:
1.11 – 1.44 mm (0.0437 – 0.0567 in.)
If the piston stroke is non–standard, select another flange.
HINT: There are 2 different flange thickness.
Flange thickness:
2.60 mm (0.1024 in.)
3.00 mm (0.1181 in.)

FORWARD CLUTCH

AX0FA–02

COMPONENTS

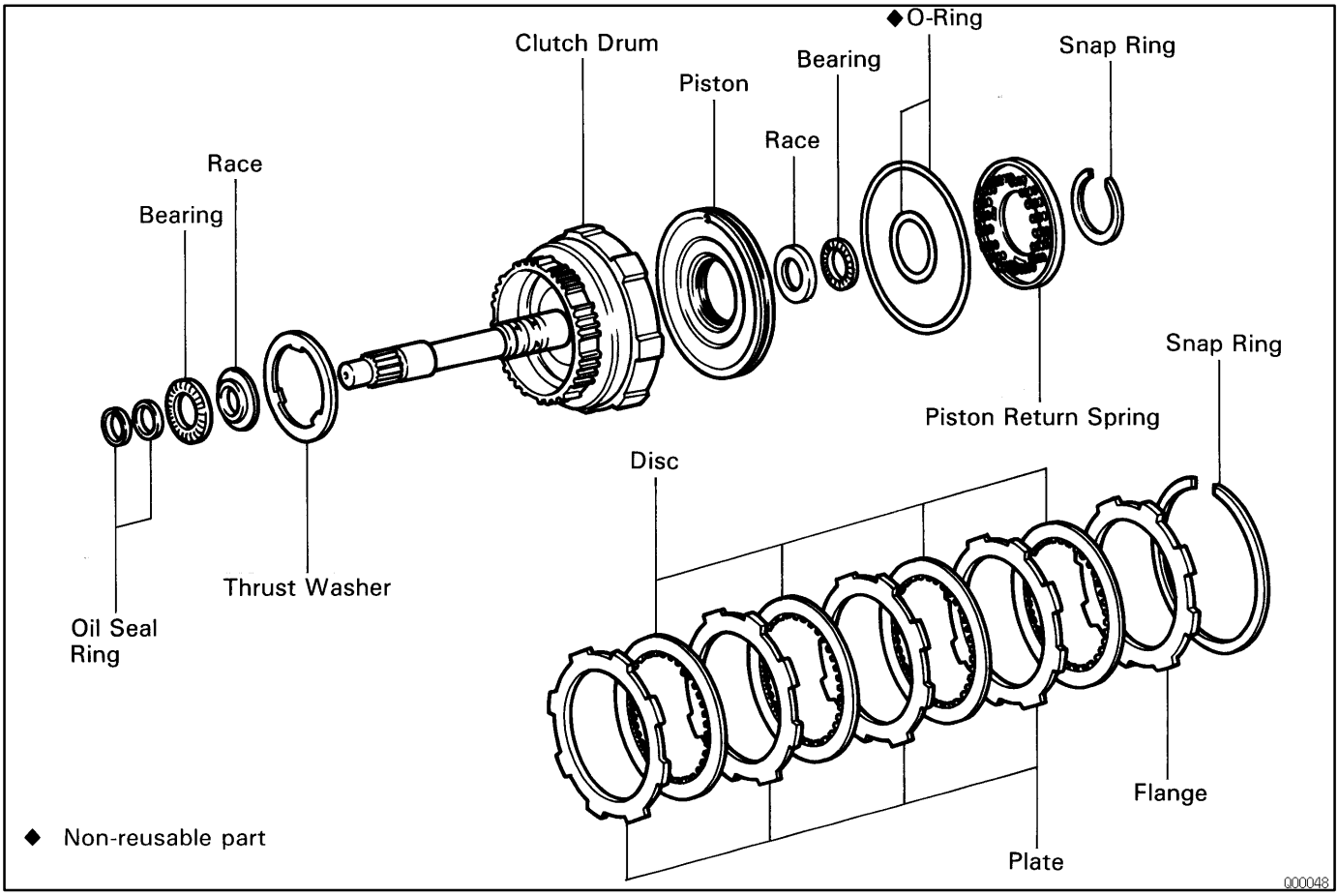

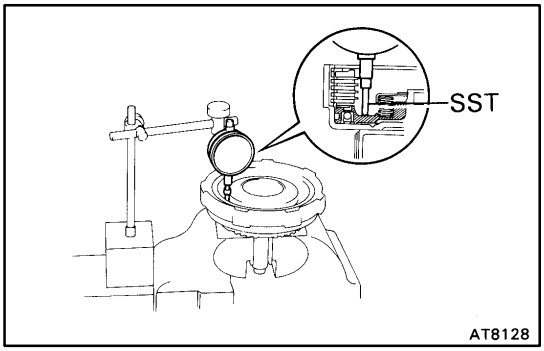

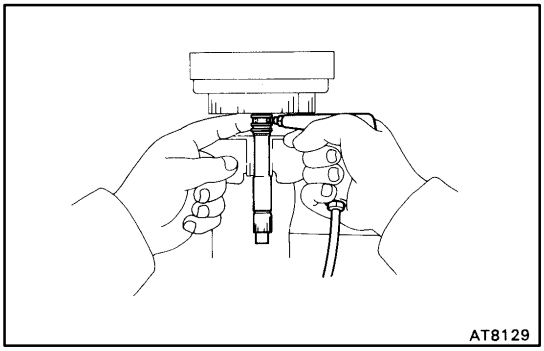

AX0FB–02

FORWARD CLUTCH DISASSEMBLY

1. CHECK PISTON STROKE OF FORWARD CLUTCH

Set a dial indicator and measuring terminal (SST) together, measure the forward clutch piston stroke while applying and releasing compressed air (392 – 785 kPa, 4 – 8 kgf/cm^2, 57 – 114 psi).

SST 09350–32014 (09351–32190)

Piston stroke:

1.41 – 1.82 mm (0.0555 – 0.0717 in.)

If the piston stroke is greater than the maximum inspect the each component.

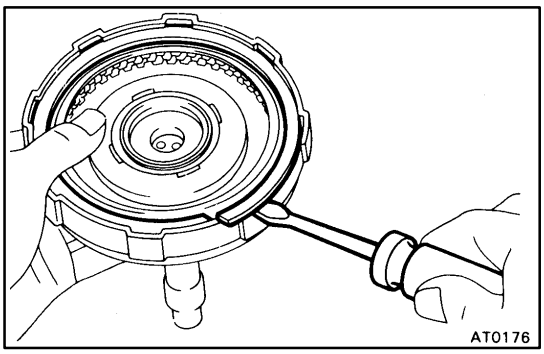

2. REMOVE SNAP RING FROM CLUTCH DRUM

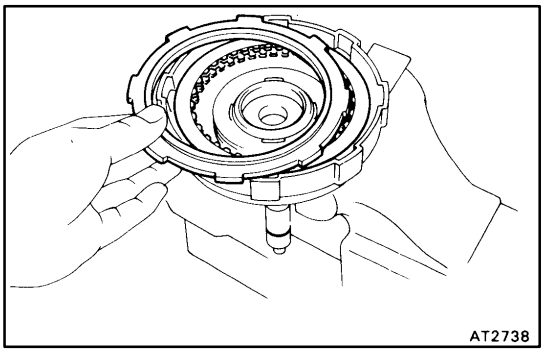

3. REMOVE FLANGE, DISCS AND PLATES

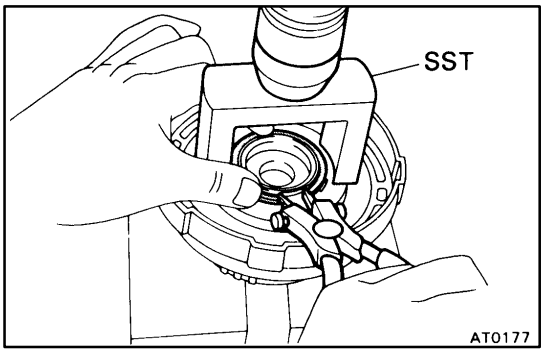

4. REMOVE RETURN SPRINGS

(a) Place SST on the spring retainer and compress the springs with a shop press.
SST 09350–32014 (09351–32070)

(b) Remove the snap ring with the snap ring pliers.

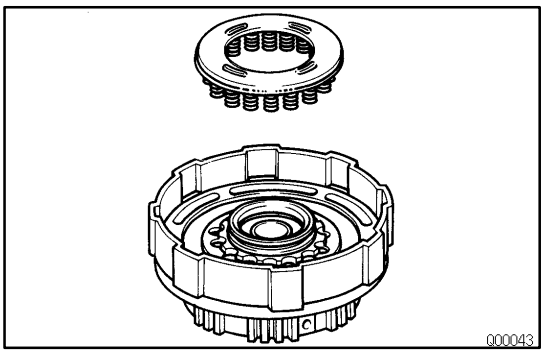

(c) Remove the piston return spring.

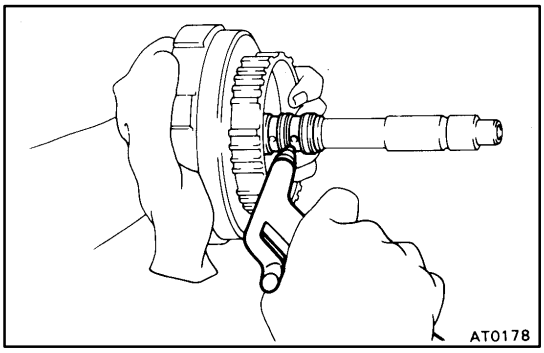

5. REMOVE CLUTCH PISTON

(a) Apply compressed air into the oil passage to remove the piston.
If the piston does not come out, use needle–nose pliers to remove it.

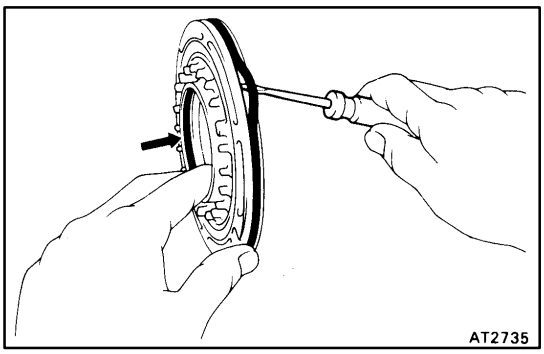

(b) Remove the 2 O–rings from the piston.

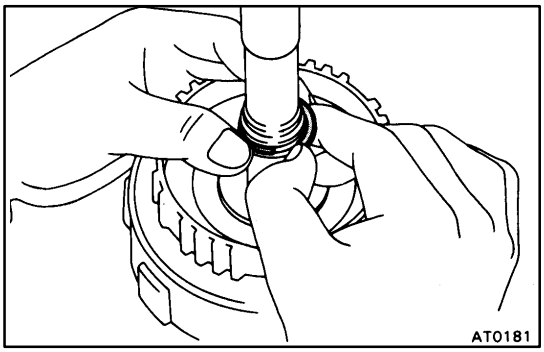

6. IF NECESSARY, REMOVE OIL SEAL RINGS

Remove the 2 oil seal rings from the shaft.

AX0FC–02

FORWARD CLUTCH INSPECTION

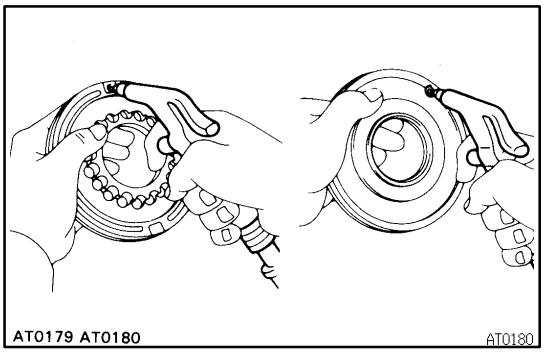

1. INSPECT CLUTCH PISTON

(a) Check that the check ball is free by shaking the piston.

(b) Check that the valve does not leak by applying lowpressure compressed air.

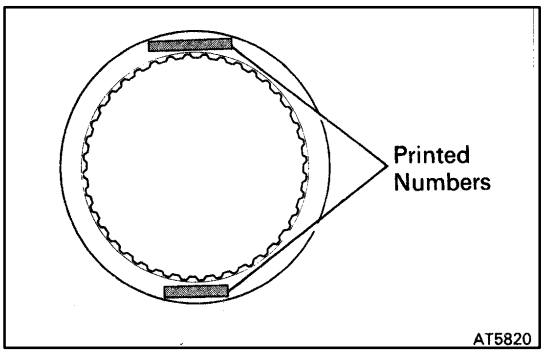

2. INSPECT DISCS, PLATES AND FLANGE

Check if the sliding surfaces of the discs, plates and flange are worn or burnt. If necessary, replace them.

HINT:

- If the lining of the disc is peeling off or discolored, or even if a part of the printed numbers are defaced, replace all discs.
- Before assembling new discs, soak them in ATF for at least 15 minutes.

AX0FD–02

FORWARD CLUTCH ASSEMBLY

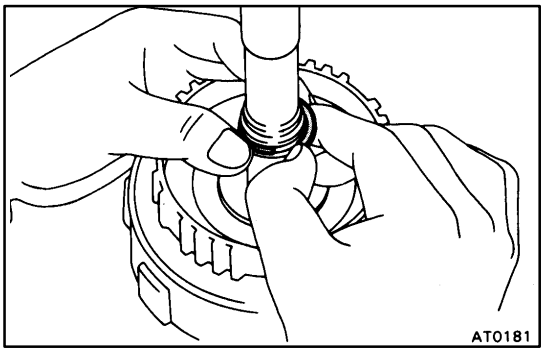

1. INSTALL OIL SEAL RINGS

Install the 2 oil seal rings to the shaft.

NOTICE: Do not spread the ring ends more than necessary.

HINT: After installing the oil seal rings, check that they move smoothly.

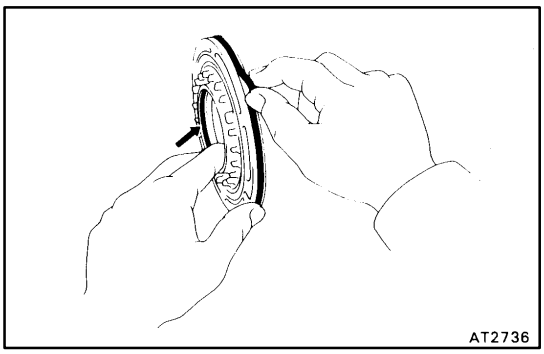

2. INSTALL CLUTCH PISTON TO CLUTCH DRUM

(a) Install the 2 new O–rings to the piston.

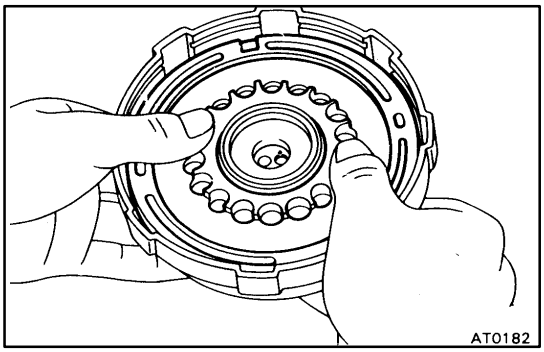

(b) Coat the O–rings with ATF.

(c) Press the piston into the drum with the cup side up, being careful not to damage the O–rings.

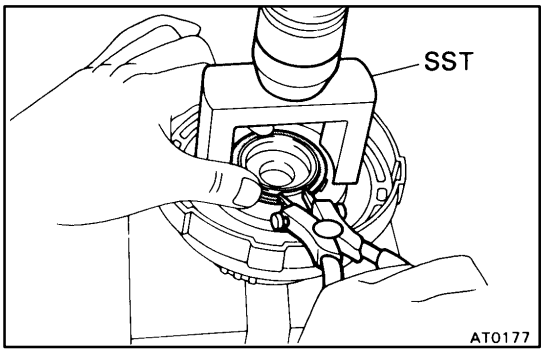

3. INSTALL PISTON RETURN SPRINGS

(a) Place the piston return spring and snap ring onto the piston.

(b) Place SST on the piston return spring, and compress the springs with a shop press.
SST 09350–32014 (09351–32070)

(c) Install the snap ring with snap ring pliers.
Be sure the end gap of the snap ring is not aligned with the spring retainer claw.

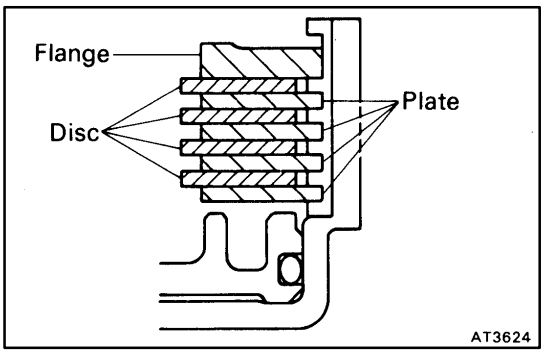

4. INSTALL PLATES, DISCS AND FLANGE

(a) Install the plates and discs.
Install in order: P=Plate D=Disc
P – D – P – D – P – D – P – D

(b) Install the flange with the flat end facing downward.

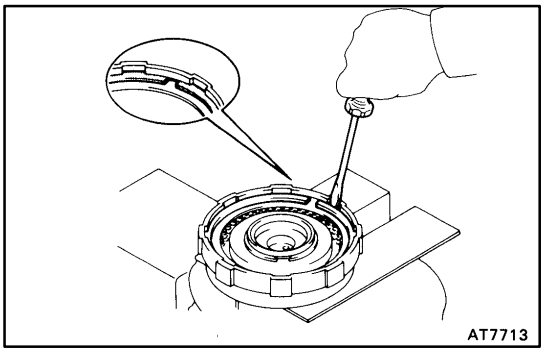

5. INSTALL SNAP RING

Check that the end gap of snap ring is not aligned with one of the cutouts.

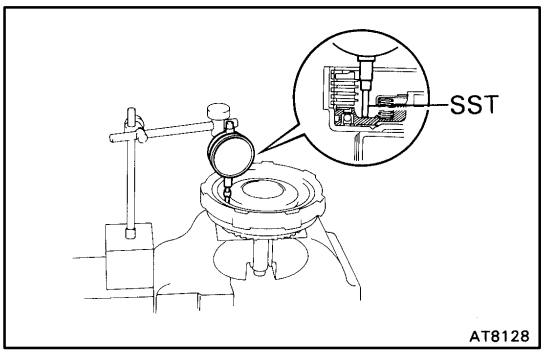

6. RECHECK PISTON STROKE OF FORWARD CLUTCH

Set a dial indicator and measuring terminal (SST) together, measure the forward clutch piston stroke while applying and releasing compressed air (392 – 785 kPa, 4 – 8 kgf/cm^2, 57 – 114 psi).

SST 09350–32014 (09351–32190)

Piston stroke:

1.41 – 1.82 mm (0.0555 – 0.0717 in.)

If the piston stroke is less than the limit, parts may be misassembled and reinstall them.

If the piston stroke is non–standard, select another flange.

HINT: There are 5 different flange thickness.

Flange thickness:

2.8 mm (0.110 in.)
3.0 mm (0.118 in.)
3.2 mm (0.126 in.)
3.4 mm (0.134 in.)
3.6 mm (0.142 in.)

FRONT PLANETARY GEAR

AX0FE–02

COMPONENTS

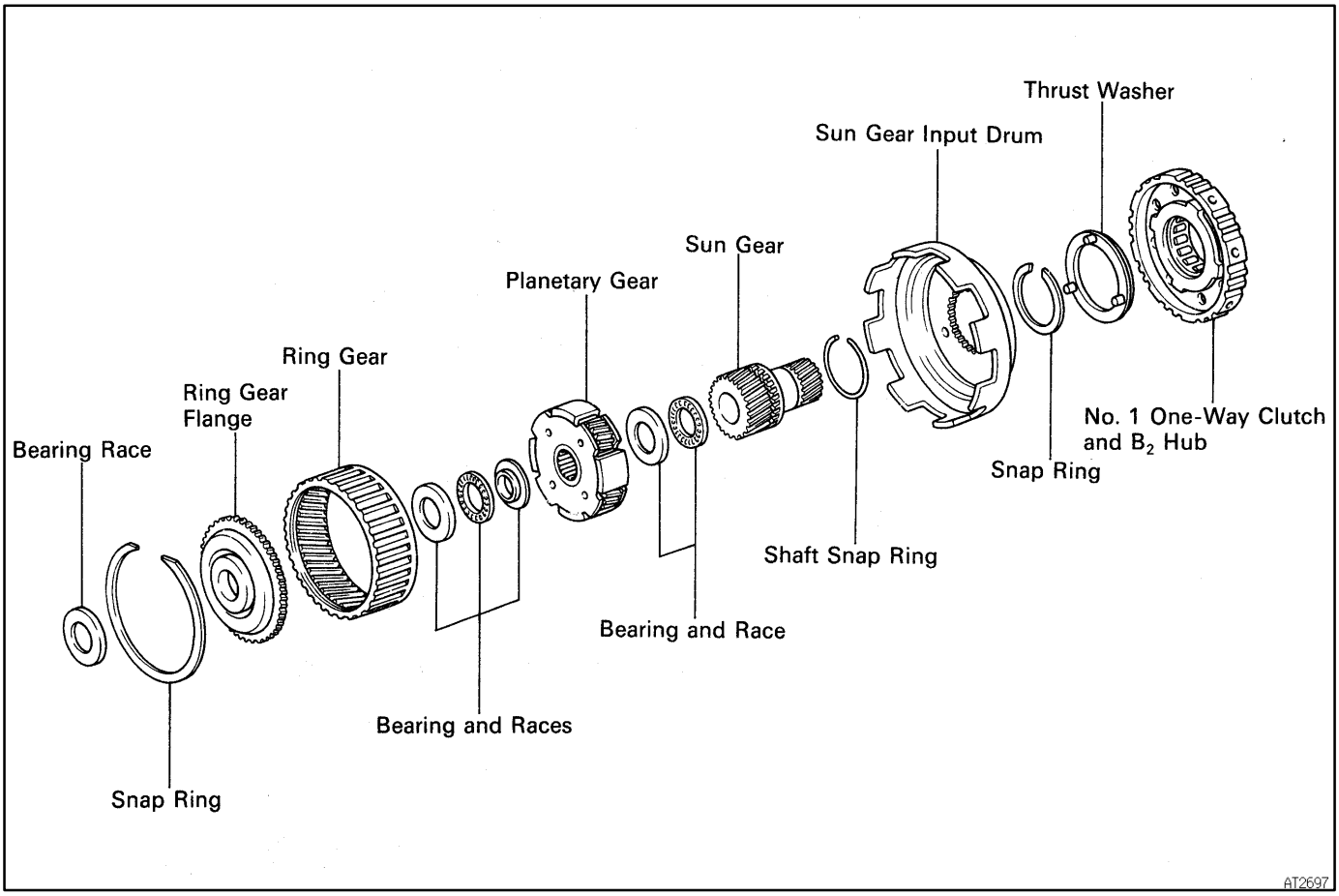

AX0FF–02

ONE–WAY CLUTCH AND SUN GEAR

DISASSEMBLY

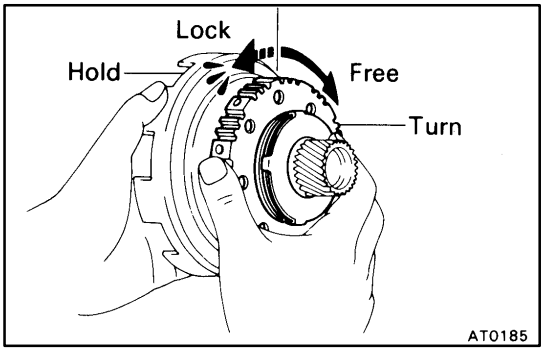

1. CHECK OPERATION OF ONE–WAY CLUTCH

Hold the sun gear and turn the hub. The hub should turn freely clockwise and should lock counterclockwise.

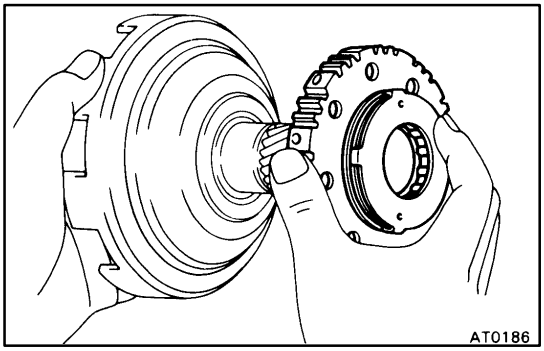

2. REMOVE SECOND BRAKE HUB AND ONE–WAY CLUTCH FRONT SUN GEAR

While turning the hub clockwise, remove the one–way clutch from the sun gear.

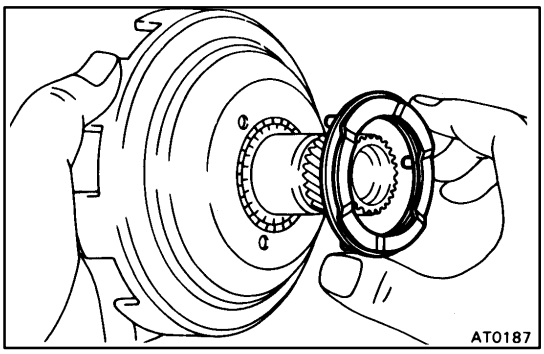

3. REMOVE THRUST WASHER FROM SUN GEAR INPUT DRUM

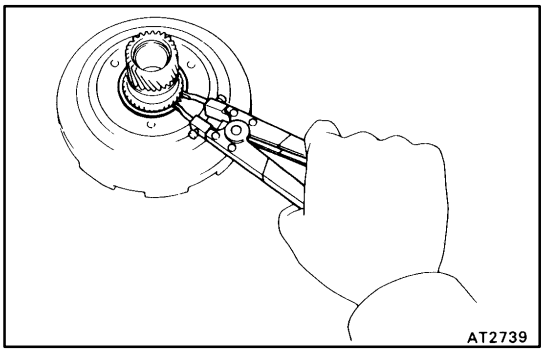

4. REMOVE SUN GEAR FROM DRUM

(a) Using snap ring pliers, remove the snap ring from the drum.

(b) Remove the sun gear from the drum.

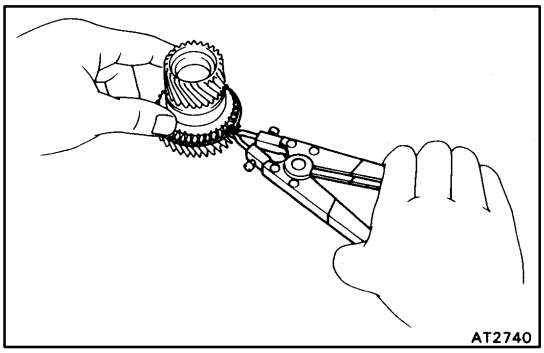

5. REMOVE SHAFT SNAP RING

Using snap ring pliers, remove the shaft snap ring from the sun gear.

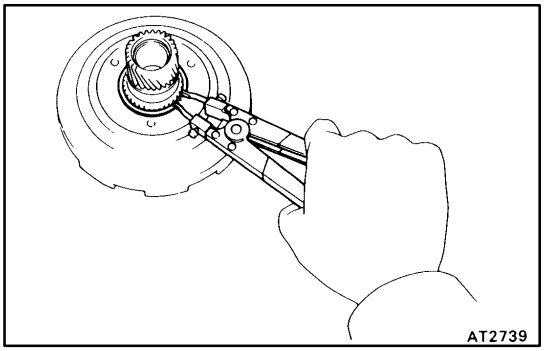

AX0FG–02

ONE–WAY CLUTCH AND SUN GEAR ASSEMBLY

1. INSTALL SHAFT SNAP RING TO SUN GEAR

2. INSTALL SUN GEAR TO DRUM

(a) Install the sun gear to the drum.

(b) Using snap ring pliers, install the snap ring to the drum.

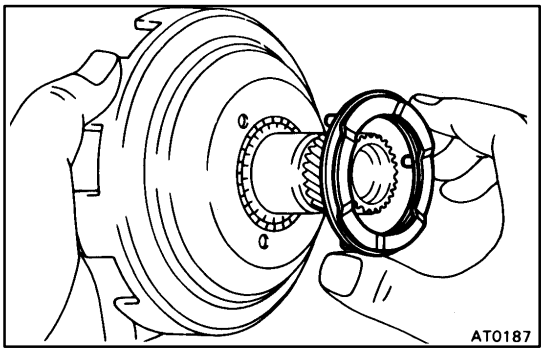

3. INSTALL THRUST WASHER TO SUN GEAR INPUT DRUM

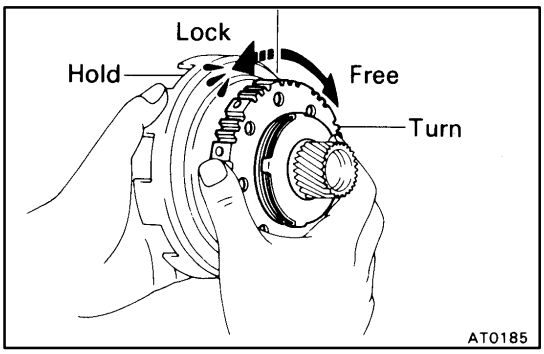

4. INSTALL ONE–WAY CLUTCH AND SECOND BRAKE HUB ON SUN GEAR

While turning the hub clockwise, slide the one–way clutch onto the sun gear.

5. RECHECK OPERATION OF ONE–WAY CLUTCH

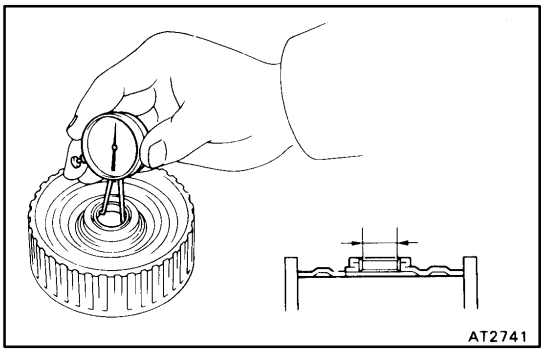

AX0FH–02

PLANETARY RING GEAR INSPECTION

1. INSPECT RING GEAR FLANGE BUSHING

Using a dial indicator, measure the inside diameter of the flange bushing.

Standard inside diameter:

19.025 – 19.050 mm (0.7490 – 0.7500 in.)

If the inside diameter is greater than the maximum, replace the flange.

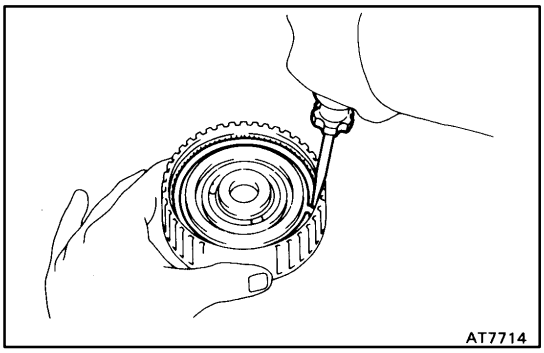

2. REMOVE RING GEAR FLANGE

(a) Using a screwdriver, remove the snap ring.

(b) Remove the flange from the ring gear.

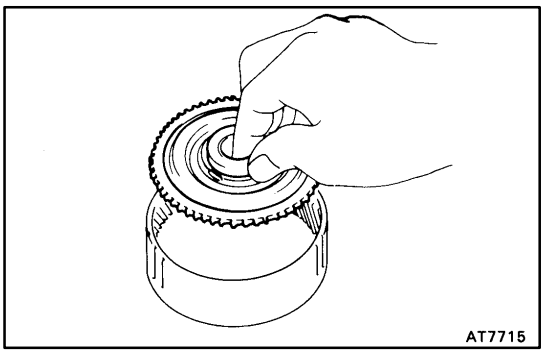

3. INSTALL RING GEAR FLANGE

(a) Position the flange into the ring gear.

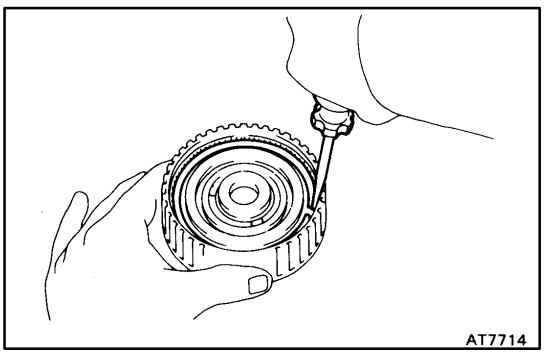

(b) Using a screwdriver, install the snap ring.

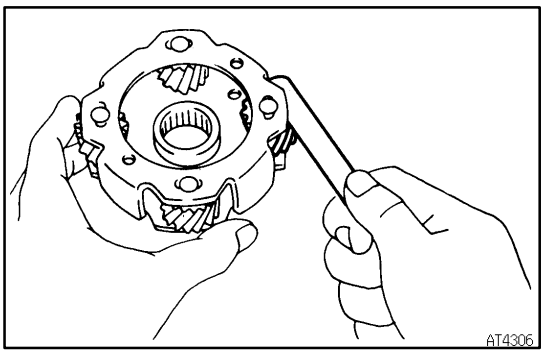

FRONT PLANETARY GEAR INSPECTION

AX0FJ–02

MEASURE PLANETARY PINION GEAR THRUST CLEARANCE

Using a feeler gauge, measure the planetary pinion gear thrust clearance.

Standard clearance:

0.20 – 0.50 mm (0.0079 – 0.0197 in.)

SECOND BRAKE

COMPONENTS

AX0FK–02

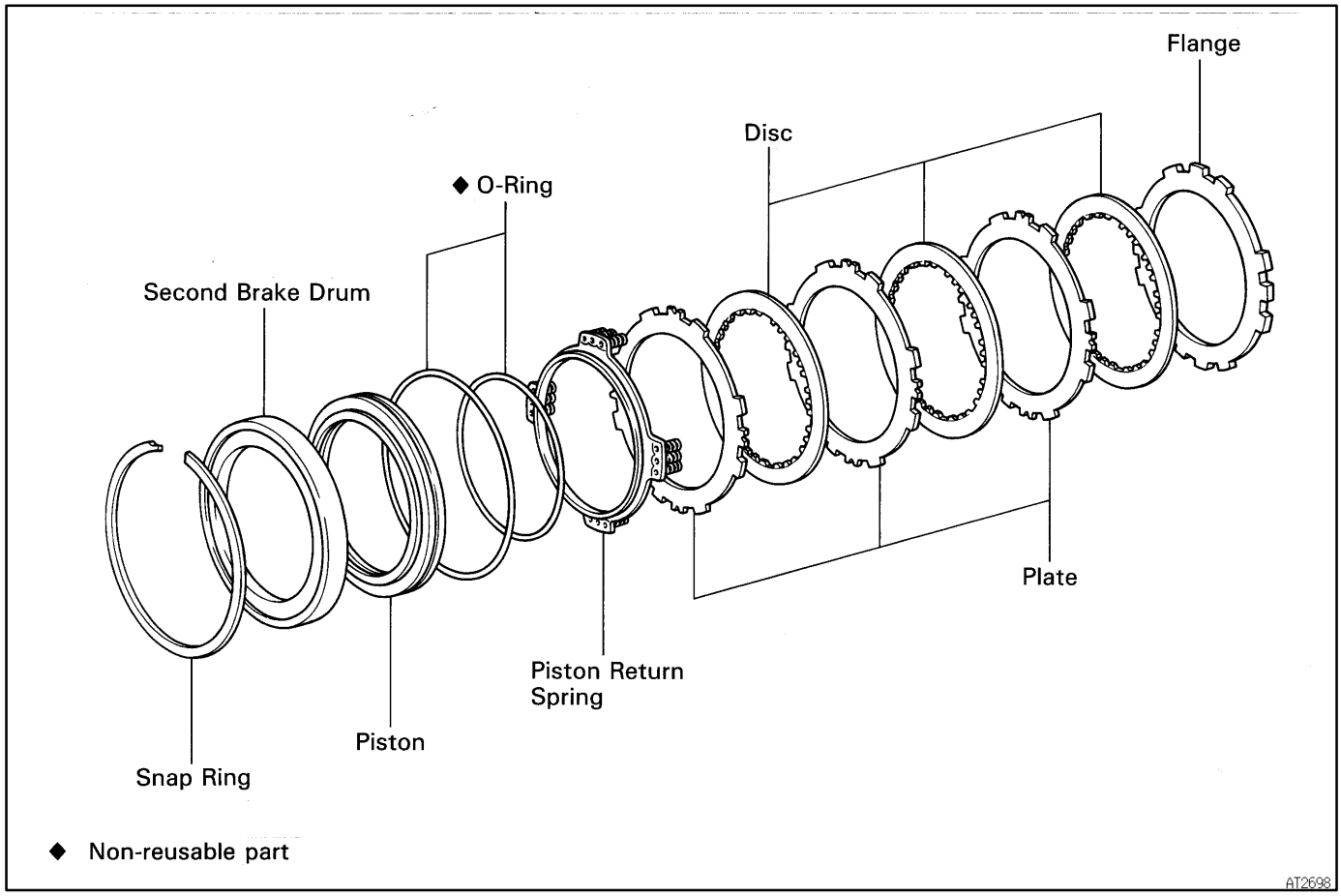

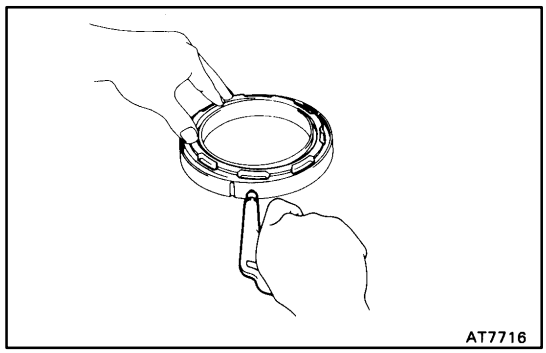

SECOND BRAKE PISTON DISASSEMBLY

AX0FL–02

REMOVE SECOND BRAKE PISTON

(a) Apply compressed air to the oil hole to remove the piston.

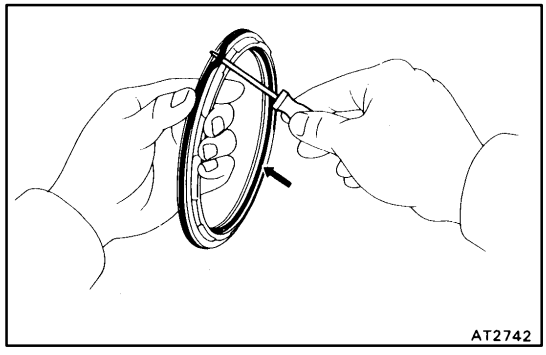

(b) Remove the 2 O–rings from the piston.

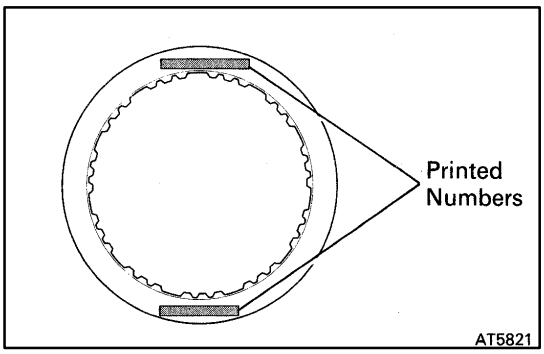

AX0FM–02

SECOND BRAKE INSPECTION

INSPECT DISCS, PLATES AND FLANGE

Check if the sliding surface of the discs, plates and flange are worn or burnt. If necessary, replace them.

HINT:

- If the lining of the disc is peeling off or discolored, or even if a part of the printed numbers are defaced, replace all discs.
- Before assembling new discs, soak them in ATF for at least 15 minutes.

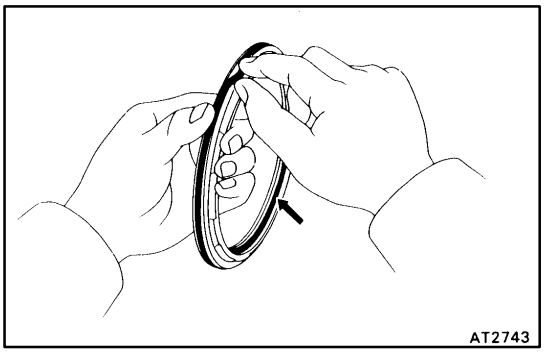

AX0FN–02

SECOND BRAKE PISTON ASSEMBLY

INSTALL PISTON

(a) Coat a new O–ring with ATF.

(b) Install the 2 O–rings on the piston.

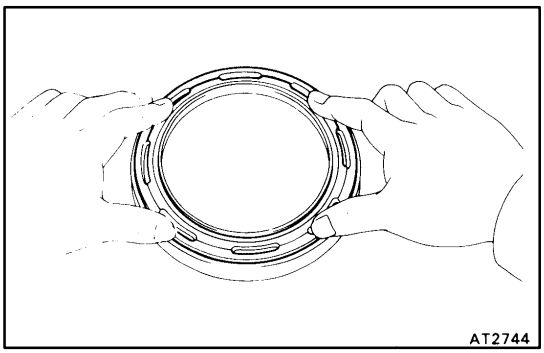

(c) Press the piston into the drum, being careful not to damage the O–rings.

REAR PLANETARY GEAR

AX0FP–02

COMPONENTS

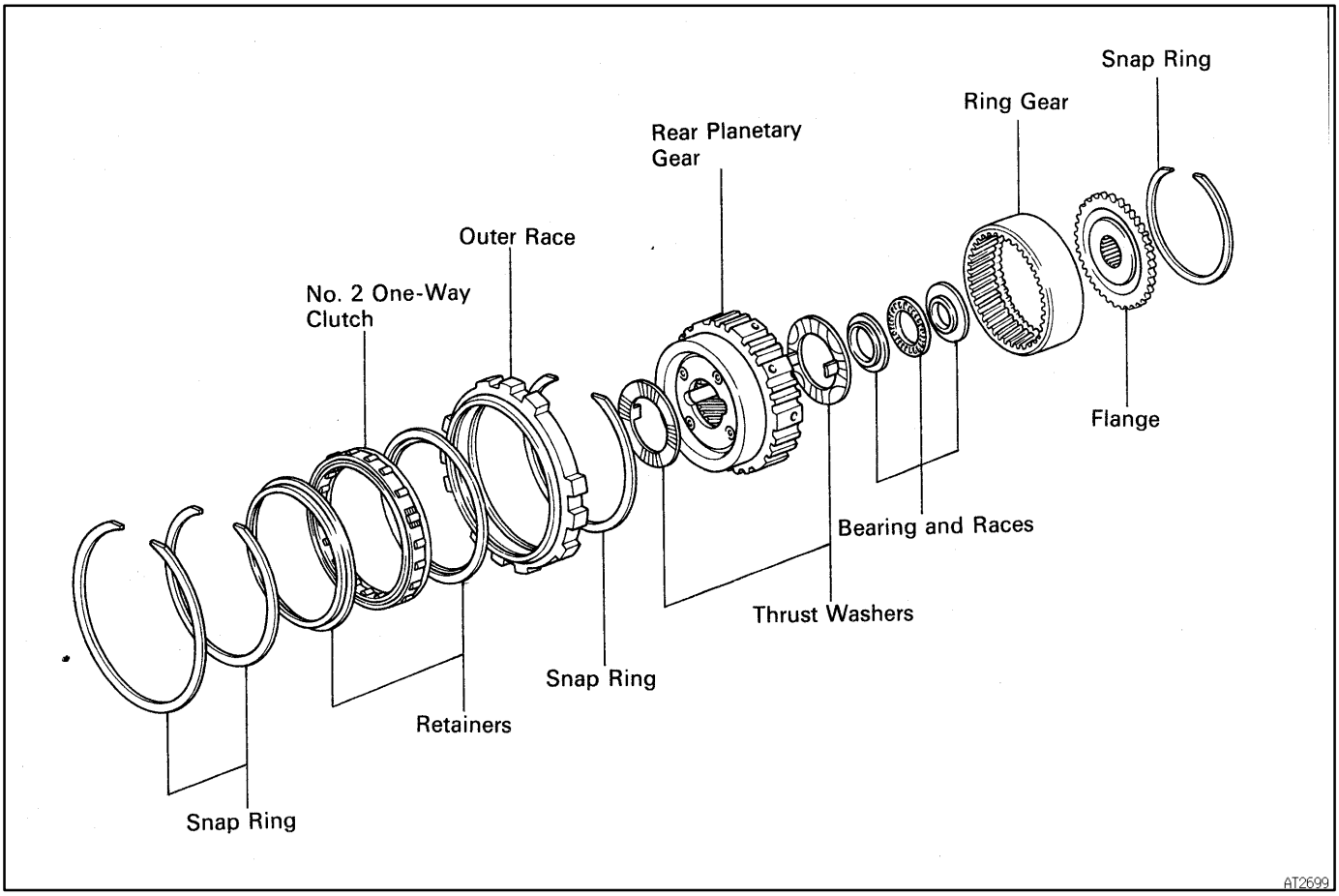

AX0FQ–02

ONE–WAY CLUTCH DISASSEMBLY

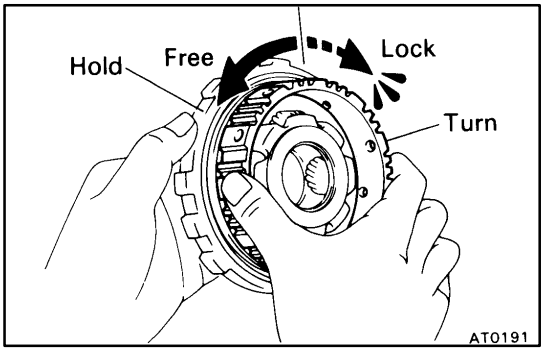

1. CHECK OPERATION OF ONE–WAY CLUTCH

Hold the outer race and turn the hub. The hub should turn freely counterclockwise and should lock clockwise.

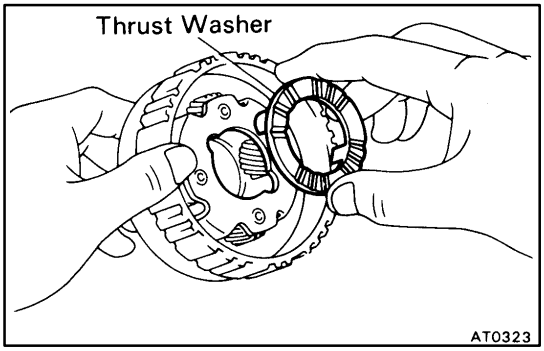

2. SEPARATE ONE–WAY CLUTCH AND PLANETARY GEAR

3. REMOVE THRUST WASHERS

Remove the 2 thrust washers from both sides of the planetary gear.

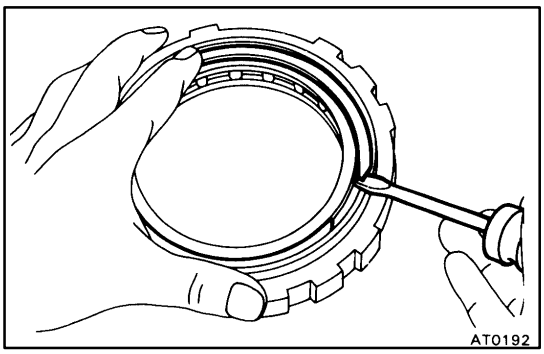

4. REMOVE ONE–WAY CLUTCH FROM OUTER RACE

(a) Remove the 2 snap rings and retainers from both sides.

(b) Remove the one–way clutch from the outer race.

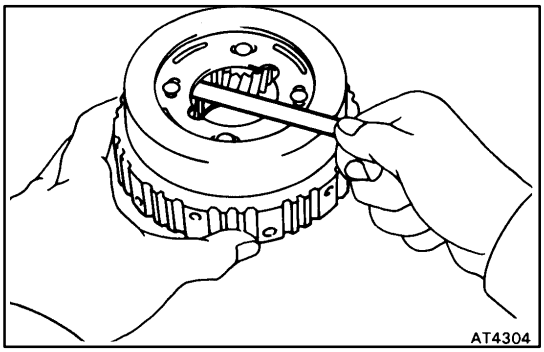

REAR PLANETARY GEAR INSPECTION

AX0FR–02

MEASURE PLANETARY PINION GEAR THRUST CLEARANCE

Using a feeler gauge, measure the planetary pinion gear thrust clearance.

Standard clearance:

0.20 – 0.50 mm (0.0079 – 0.0197 in.)

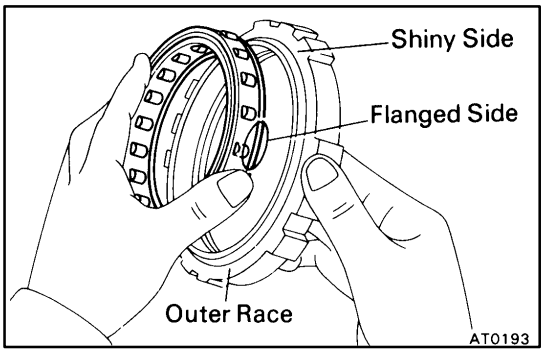

ONE–WAY CLUTCH ASSEMBLY

AX0FS–02

1. INSTALL ONE–WAY CLUTCH

(a) Install the one–way clutch into the outer race, facing the flanged side of the one–way clutch toward the shiny side of the outer race.

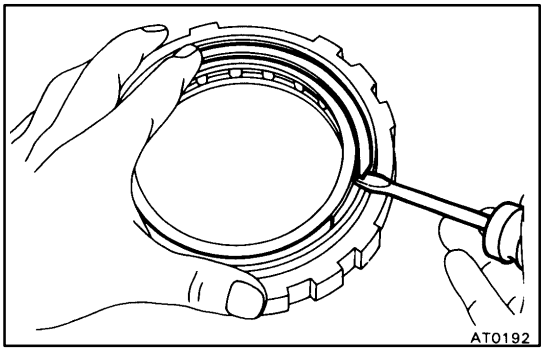

(b) Install the 2 retainers and snap rings to both sides.

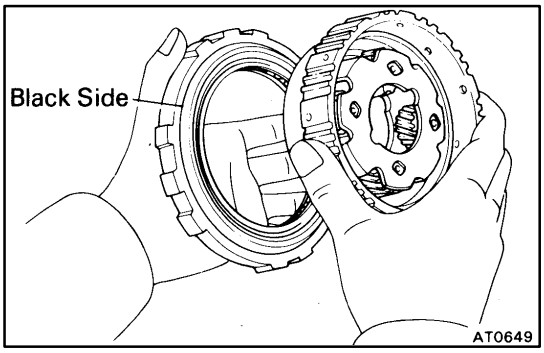

2. INSTALL PLANETARY GEAR INTO ONE–WAY CLUTCH

Install the planetary gear into the one–way clutch, facing the inner race of the planetary gear toward the black side of the one–way clutch outer race.

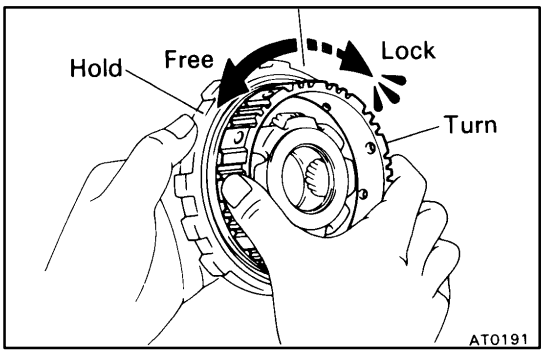

3. CHECK OPERATION OF ONE–WAY CLUTCH

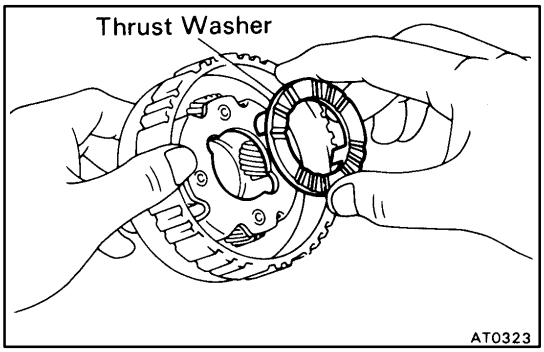

4. INSTALL THRUST WASHERS

(a) Coat the 2 thrust washers with petroleum jelly.
(b) Align the tab of the washers with the hollow of the carrier.

AX0FT–02

RING GEAR FLANGE REPLACEMENT

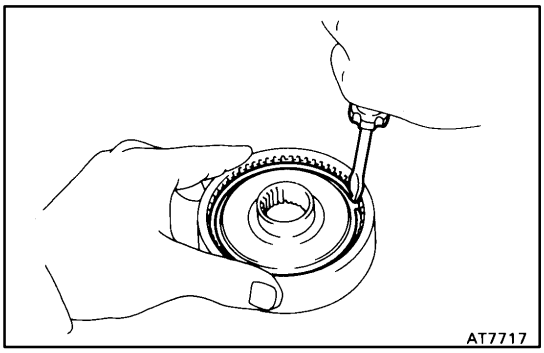

1. REMOVE RING GEAR FLANGE

(a) Using a screwdriver, remove the snap ring.
(b) Remove the flange from the ring gear.

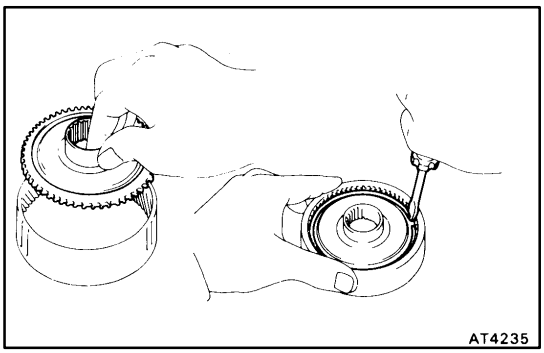

2. INSTALL RING GEAR FLANGE

(a) Position the flange into the ring gear.
(b) Using a screwdriver, install the snap ring.

FIRST AND REVERSE BRAKE

AX0FU–02

COMPONENTS

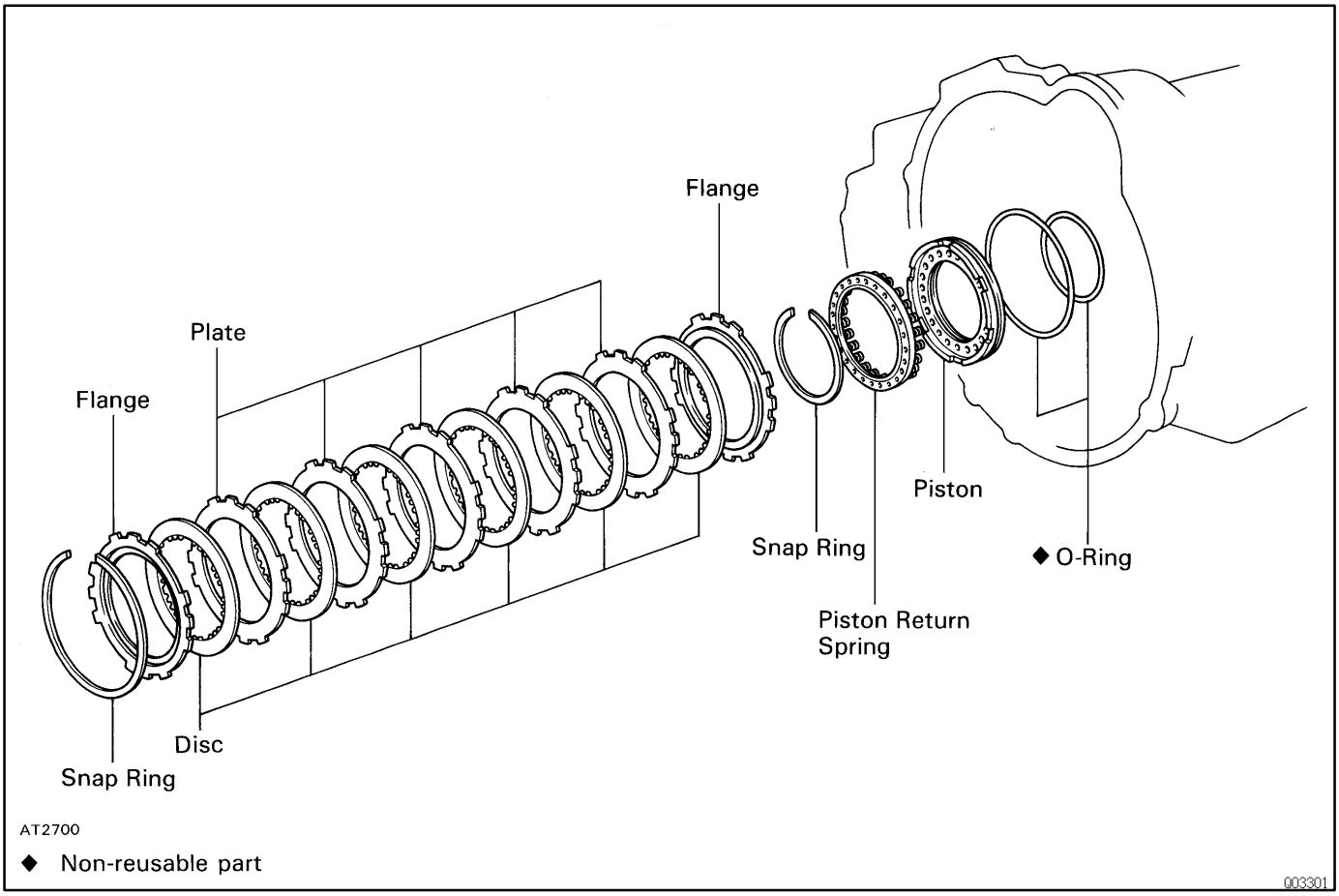

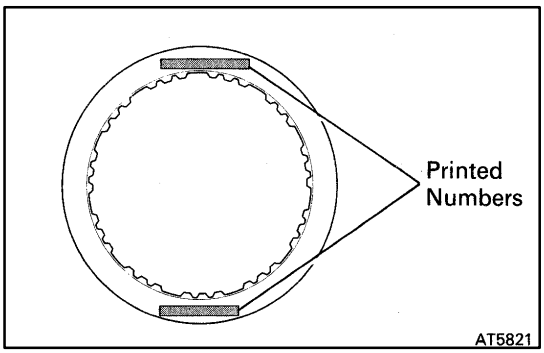

AX0FV–02

FIRST AND REVERSE BRAKE INSPECTION

INSPECT DISCS, PLATES AND FLANGES

Check if the sliding surfaces of the discs, plates and flanges are worn or burnt. If necessary, replace them.

HINT:

- If the lining of the disc is peeling off or discolored, or even if a part of the printed numbers are defaced, replace all discs.
- Before assembly new discs, soak them in ATF for at least 15 minutes.

OVERDRIVE UNIT

COMPONENTS

AX0FW–02

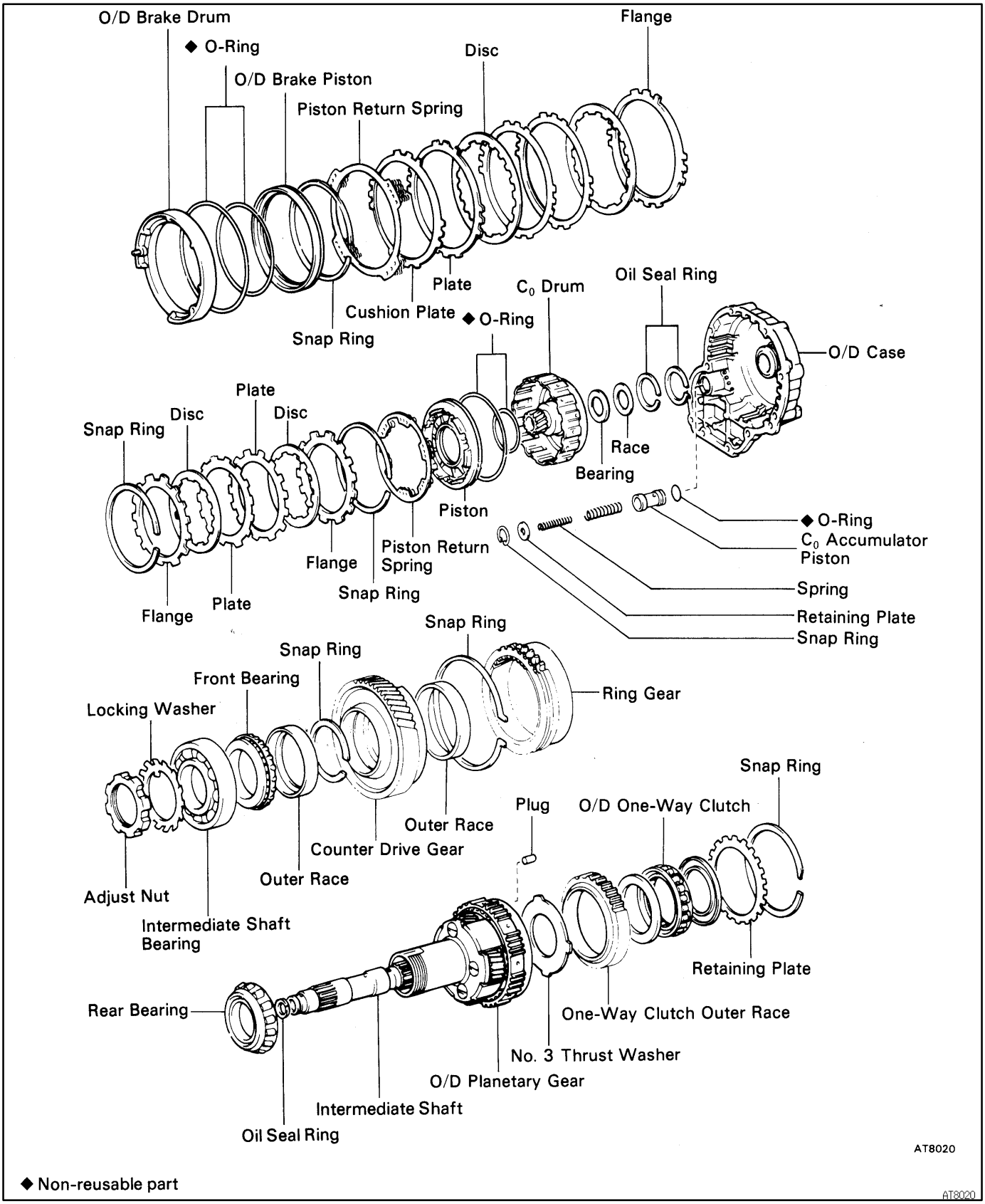

◆ Non-reusable part

AT8020

AX0FX–02

OVERDRIVE BRAKE DISASSEMBLY

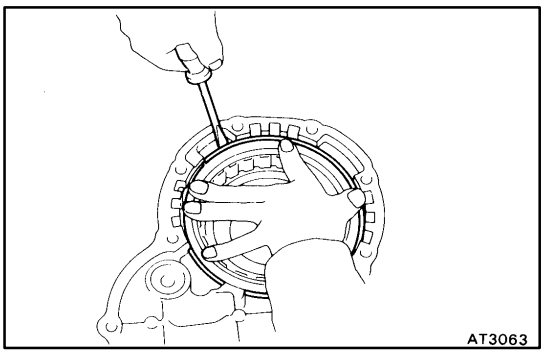

1. REMOVE PISTON RETURN SPRING

(a) While pushing the return spring, remove the snap ring with a screwdriver.

(b) Remove the piston return spring.

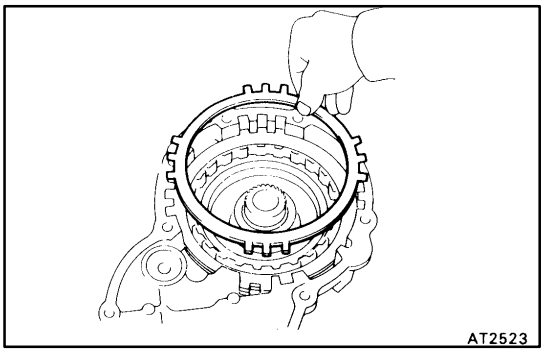

2. REMOVE CUSHION PLATE, PLATES, DISCS AND FLANGE

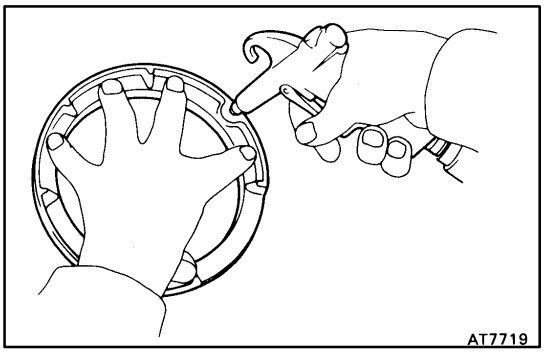

3. REMOVE PISTON FROM DRUM

Apply compressed air to oil hole to remove the piston.

HINT: Blow with the gun slightly away from the oil hole, and be careful that the piston does not tilt.

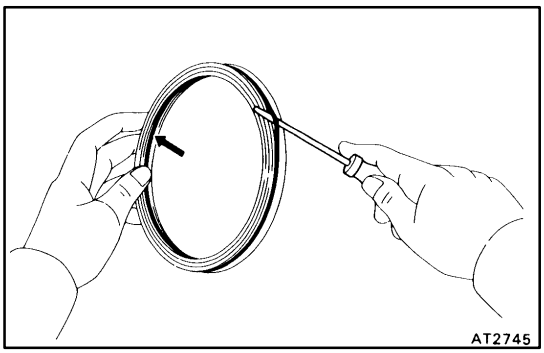

4. REMOVE O–RINGS

Remove the inner and outer O–rings from the piston.

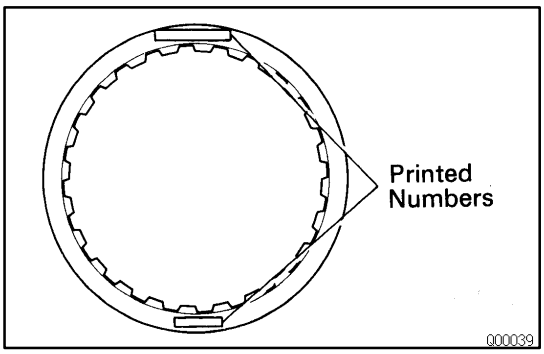

AX0FY–02

OVERDRIVE BRAKE INSPECTION

INSPECT DISCS, PLATES AND FLANGE

Check if the sliding surfaces of the discs, plates and flange are worn or burnt. If necessary, replace them.

HINT:

- If the lining of the disc is peeling off or discolored, or even if a part of the printed numbers are defaced, replace all discs.
- Before assembling new discs, soak them in ATF for at least 15 minutes.

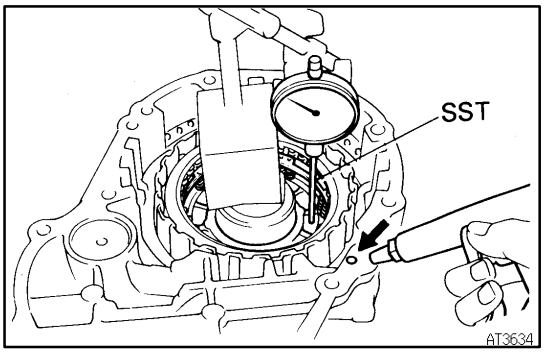

AX0FZ–02

OVERDRIVE DIRECT CLUTCH DISASSEMBLY

1. CHECK PISTON STROKE OF DIRECT CLUTCH

Using a dial indicator, measure the piston stroke while applying and releasing compressed air (392 – 785 kPa, 4 – 8 kgf/cm^2, 57– 114 psi).

Piston stroke:

1.21 – 1.91 mm (0.0476 – 0.0752 in.)

If the piston stroke is greater than the maximum, inspect the each component.

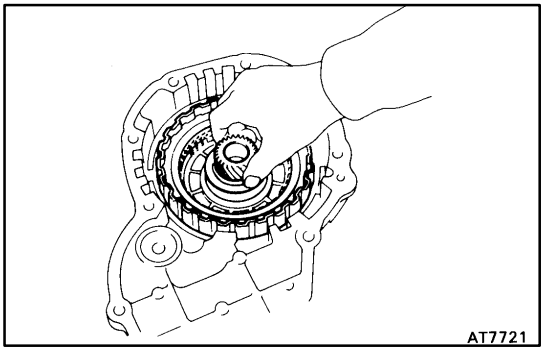

2. REMOVE OVERDRIVE DIRECT CLUTCH FROM CASE

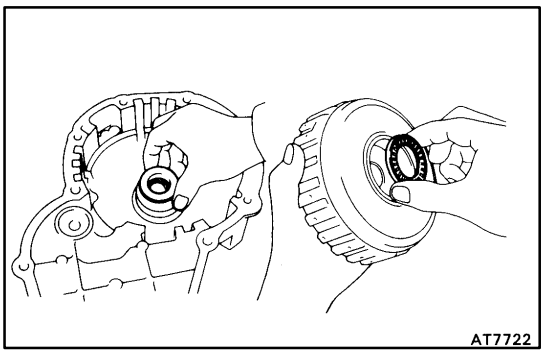

3. REMOVE BEARING AND RACE FROM CLUTCH DRUM AND CASE

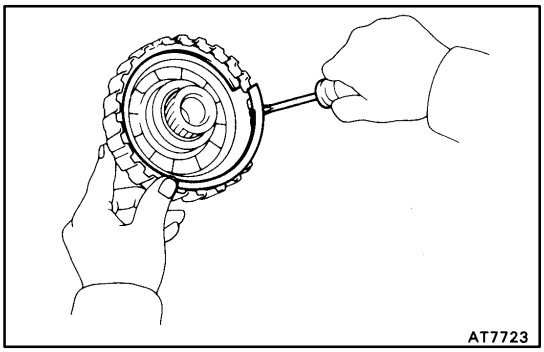

4. REMOVE SNAP RING WITH SCREWDRIVER

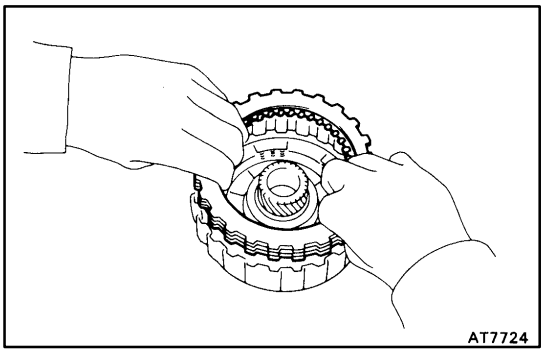

5. REMOVE FLANGES, DISCS AND PLATES

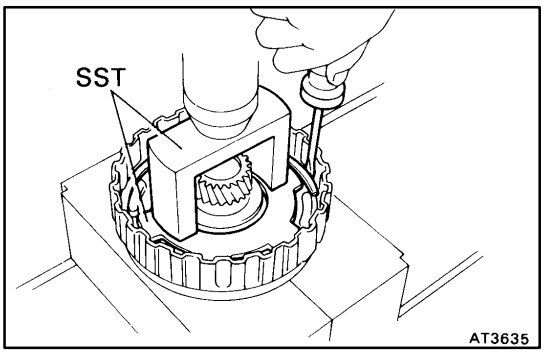

6. REMOVE PISTON RETURN SPRING

(a) Place SST on the spring retainer and compress the spring with a shop press.
SST 09350–32014 (09351–32070, 09351–32200)

(b) Remove the snap ring.

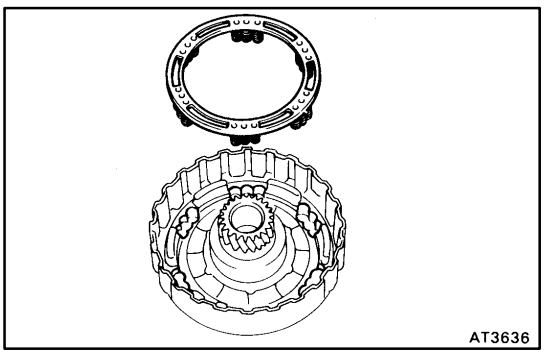

(c) Remove the piston return spring.

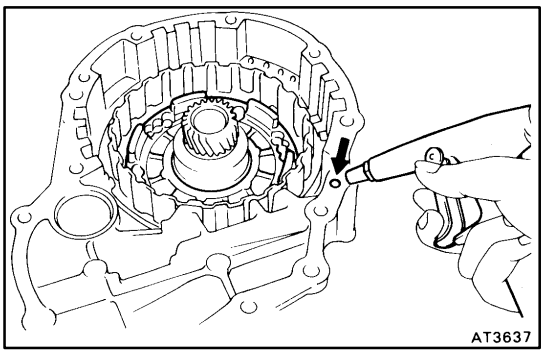

7. REMOVE PISTON FROM CLUTCH DRUM

(a) Install the clutch drum of the case.
(b) Apply compressed air to the pressure apply hole of the case.
(c) Remove the piston from the clutch drum.
If the piston does not come out completely, use needle–nose pliers to remove it.
(d) Remove the clutch drum from the case.

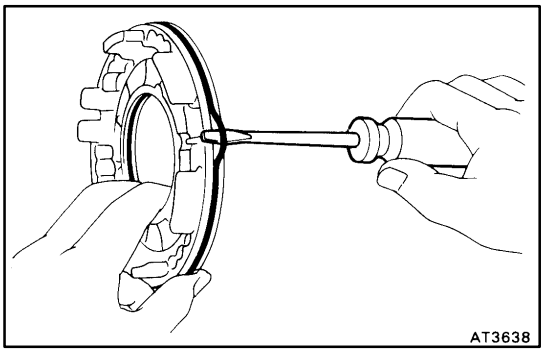

8. REMOVE O–RINGS

Remove the 2 O–rings from the piston.

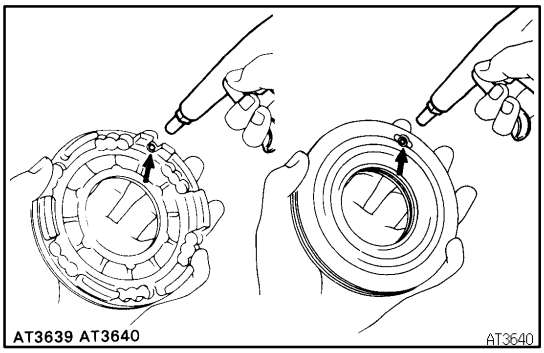

OVERDRIVE DIRECT CLUTCH INSPECTION

AX0G0–02

1. INSPECT OVERDRIVE DIRECT CLUTCH

(a) Check that the check ball is free by shaking the piston.
(b) Check that the valve does not leak by applying lowpressure compressed air.

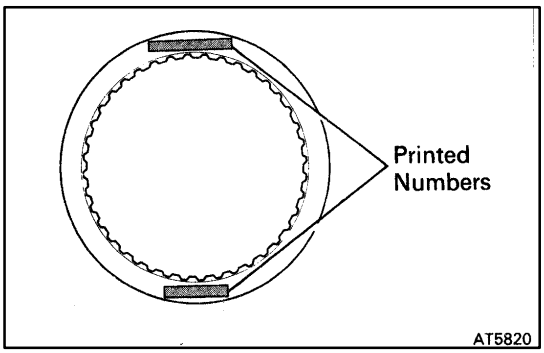

2. INSPECT DISCS, PLATES AND FLANGES

Check that the sliding surfaces of discs, plates and flanges are worn or burnt. If necessary, replace them.
HINT:

- If the lining of the disc is peeling off or discolored, or even if a part of the printed numbers are defaced, replace all discs.
- Before assembling new discs, soak them in ATF for at least 15 minutes.

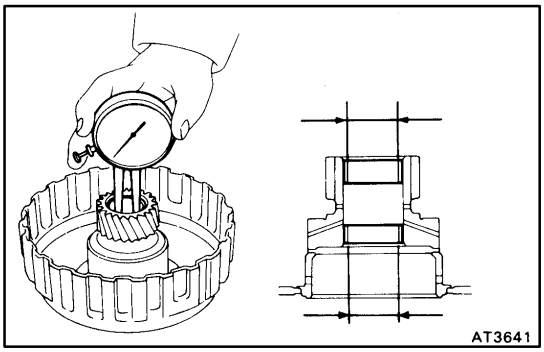

3. CHECK DIRECT CLUTCH BUSHING

Using a dial indicator, measure the inside diameter of the two direct clutch bushings.

Maximum inside diameter:

22.09 mm (0.8697 in.)

If the inside diameter is greater than the maximum, replace the direct clutch drum.

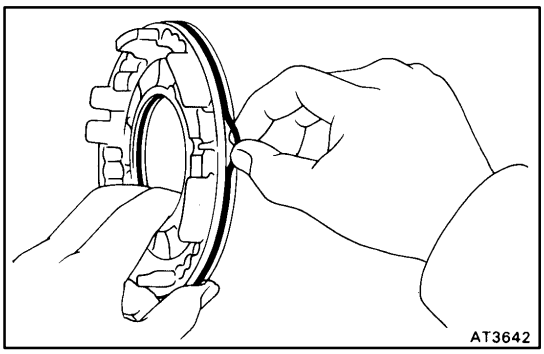

OVERDRIVE DIRECT CLUTCH ASSEMBLY

AX0G1–02

1. INSTALL CLUTCH PISTON

(a) Install new O–rings to the piston. Coat the O–rings with ATF.

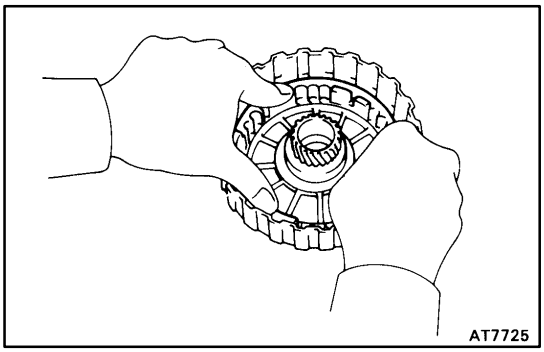

(b) Press the piston into the drum with the cup side up, being careful not to damage the O–ring.

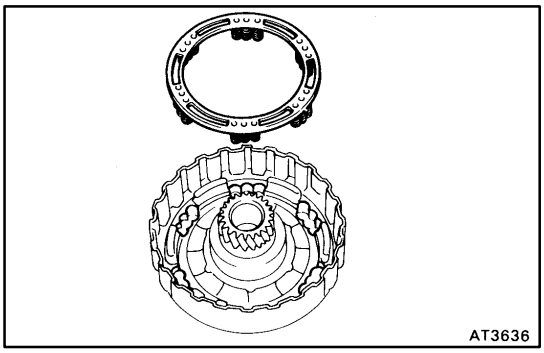

2. INSTALL PISTON RETURN SPRING

(a) Install the return spring and set snap ring in place.

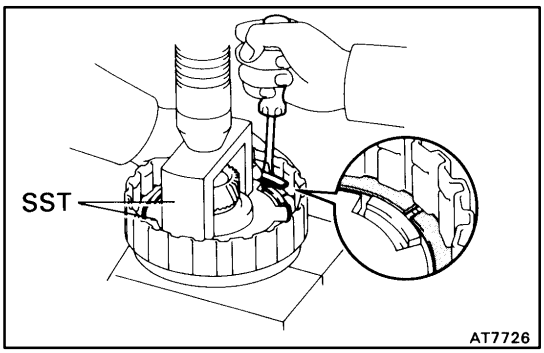

(b) Place SST on the spring retainer, and compress the spring with a shop press.
SST 09350–32014 (09351–32070, 09351–32200)

(c) Install the snap ring with a screwdriver. Be sure end gap of snap ring is aligned with the groove of the clutch drum.

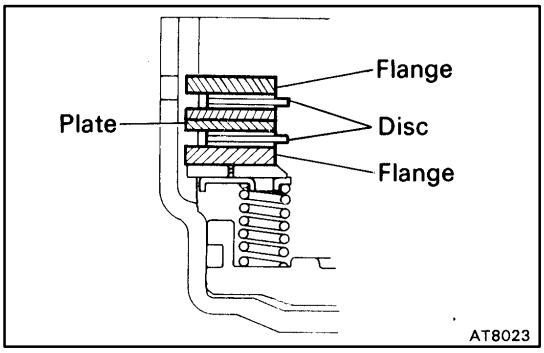

3. INSTALL PLATES, DISCS AND FLANGE

Install in order: P=Plate D=Disc
Flange – D – P – D – Flange

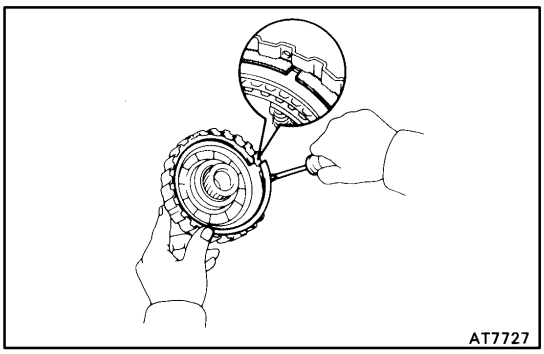

4. INSTALL SNAP RING

Be sure end gap of the snap ring is not aligned with the groove of the clutch drum.

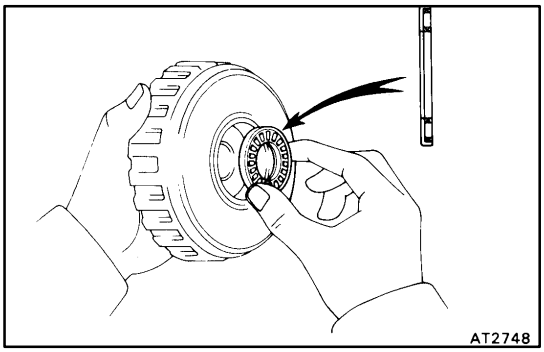

5. INSTALL BEARING AND RACE

(a) Coat the bearing with petroleum jelly and install it facing the race side downward to the clutch drum.

Bearing:

Outer diameter
46.3 mm (1.823 in.)
Inner diameter
26.2 mm (1.031 in.)

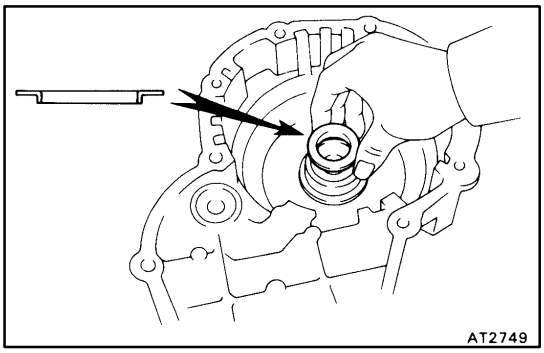

(b) Coat the race with petroleum jelly and install it to thecase.

Race:

Outer diameter
43.0 mm (1.693 in.)
Inner diameter
24.5 mm (0.965 in.)

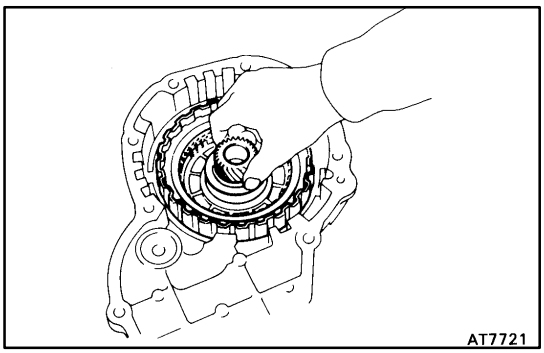

6. INSTALL DIRECT CLUTCH ON CASE

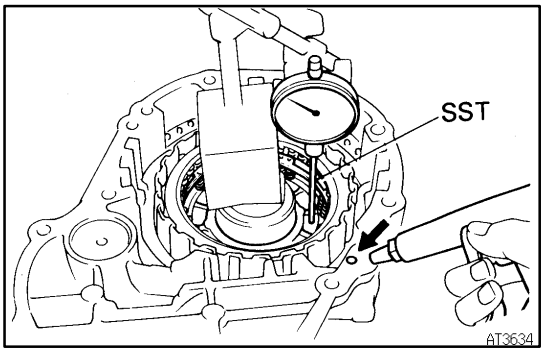

7. RECHECK PISTON STROKE OF DIRECT CLUTCH

Using a dial indicator, measure the piston stroke while applying and releasing compressed air (392 – 785 kPa, 4 – 8 kgf/cm^2, 57– 114 psi).

Piston stroke:

1.21 – 1.91 mm (0.0476 – 0.0752 in.)

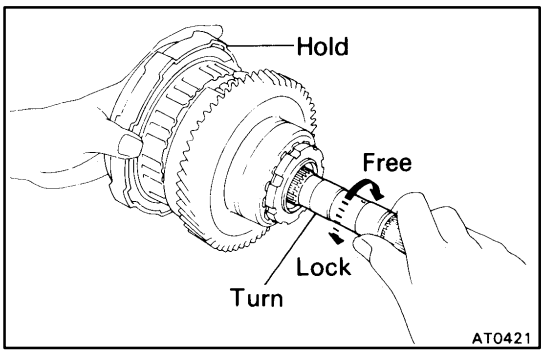

AX0G2–02

COUNTER DRIVE GEAR DISASSEMBLY

1. CHECK OPERATION OF ONE–WAY CLUTCH

(a) While turning the overdrive gear clockwise, install the overdrive direct clutch into the one–way clutch.

(b) Hold the overdrive direct clutch and turn the intermediate shaft. The shaft should turn freely clockwise and should lock counterclockwise.

(c) Remove the overdrive direct clutch.

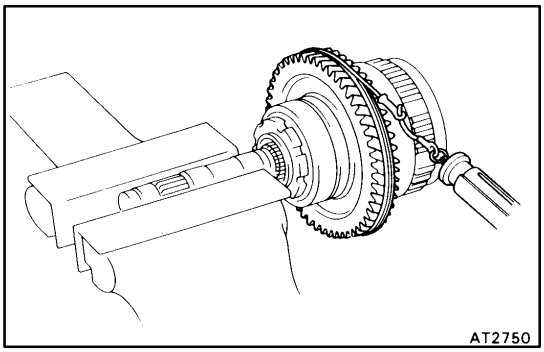

2. CHECK COUNTER DRIVE GEAR PRELOAD

(a) Hold the intermediate shaft in a vise with soft jaws.

(b) Using a tension gauge, measure the preload.

Preload (at starting):

9 – 15 N (920 – 1,530 gf, 2.0 – 3.4 lbf)

HINT: Turn the counter drive gear right and left several times before measuring the preload.

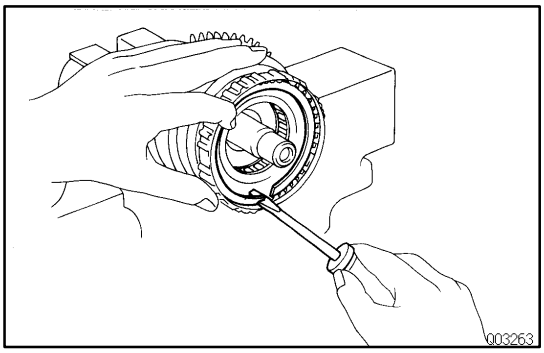

3. REMOVE RETAINING PLATE

(a) Remove the snap ring with a screwdriver.

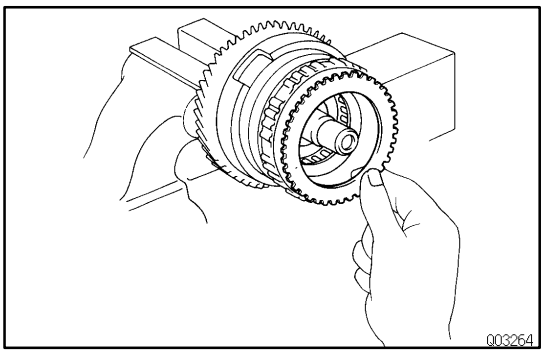

(b) Remove the retaining plate.

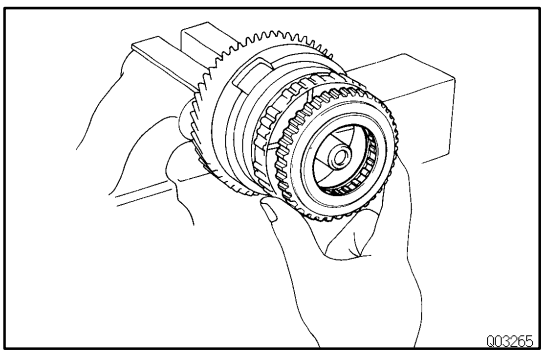

4. REMOVE ONE–WAY CLUTCH AND OUTER RACE

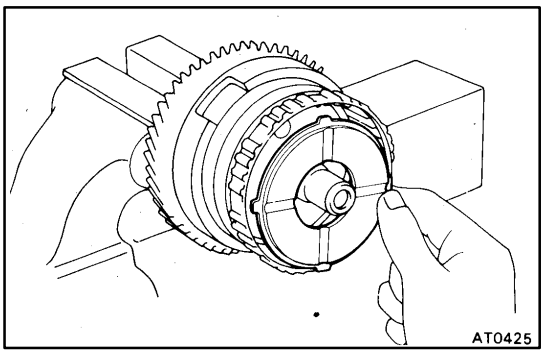

5. REMOVE NO.3 OVERDRIVE PLANETARY THRUST WASHER

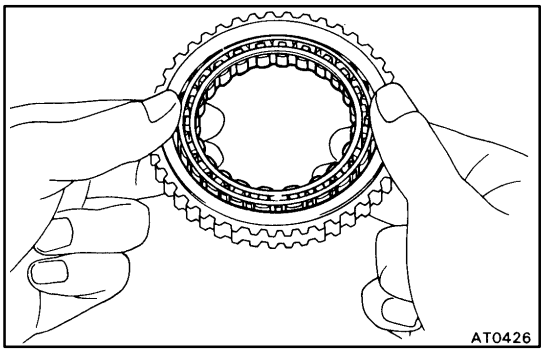

6. REMOVE ONE–WAY CLUTCH FROM OUTER RACE

Note the direction of the one–way clutch.

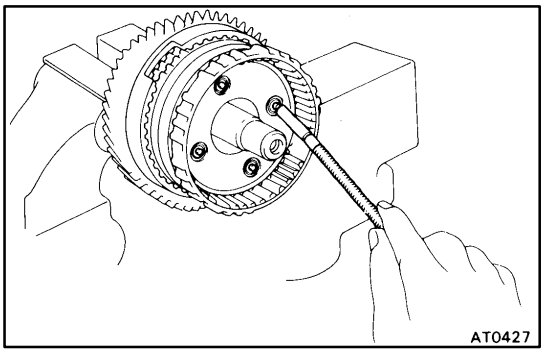

7. REMOVE PLUGS FROM PLANETARY GEAR

Remove the 4 plugs with a magnetic finger.

HINT: Be careful not to lose them.

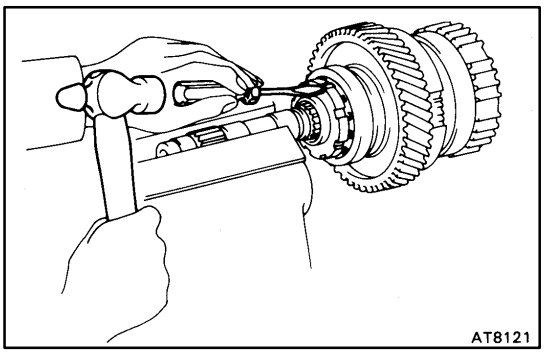

8. REMOVE ADJUSTING NUT AND WASHER

(a) Pry off the locking washer with chisel.

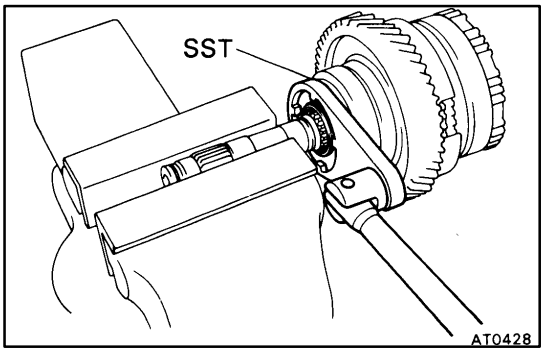

(b) Using SST, loosen the adjusting nut.
SST 09350–32014 (09351–32080)

(c) Remove the adjusting nut and washer.

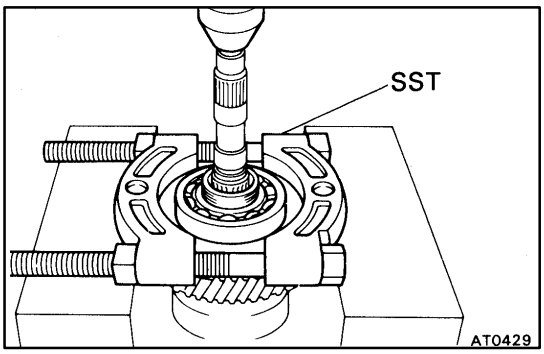

9. REMOVE INTERMEDIATE SHAFT BEARING

Using SST, press out the bearing from the shaft.
SST 09950–00020

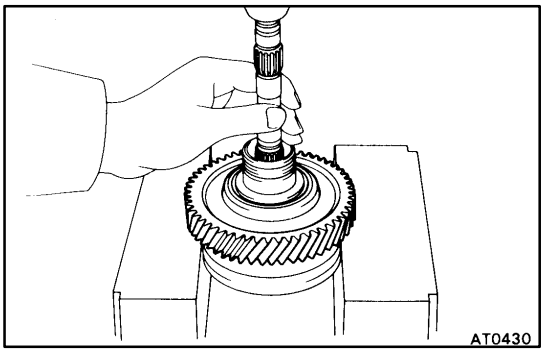

10. REMOVE COUNTER DRIVE GEAR AND FRONT BEARING

Press out the gear and bearing together.

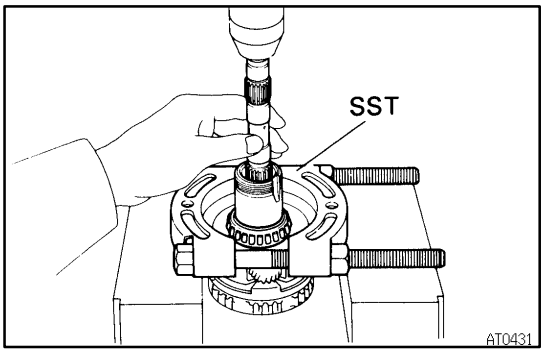

11. REMOVE REAR BEARING

Using SST, press out the bearing.
SST 09950–00020

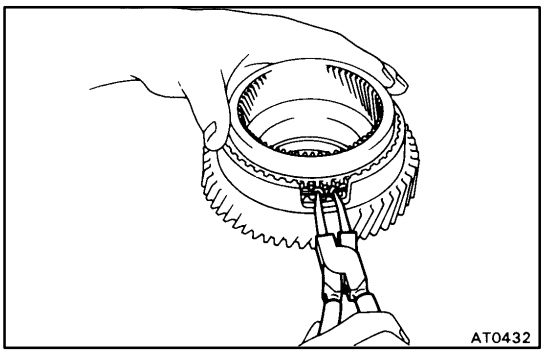

12. REMOVE OVERDRIVE PLANETARY RING GEAR FROM COUNTER DRIVEGEAR

(a) While pulling up the ring gear, compress the snap ring with needle–nose pliers and remove it from the groove.
(b) Remove the ring gear from the counter drive gear.

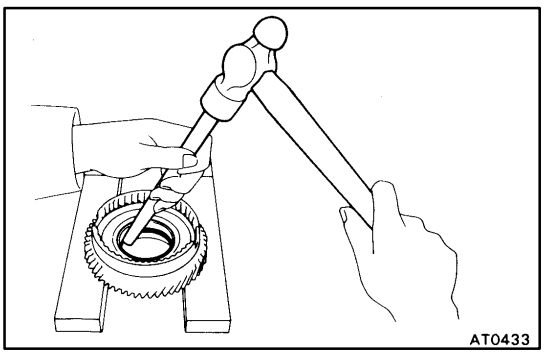

13. REMOVE OUTER RACES FROM COUNTER DRIVE GEAR

Drive out the 2 races with a brass bar and hammer.

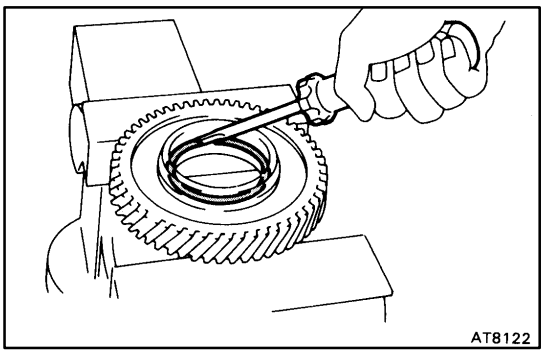

14. REMOVE SNAP RING FROM COUNTER DRIVE GEAR
Using a screwdriver, remove the snap ring.

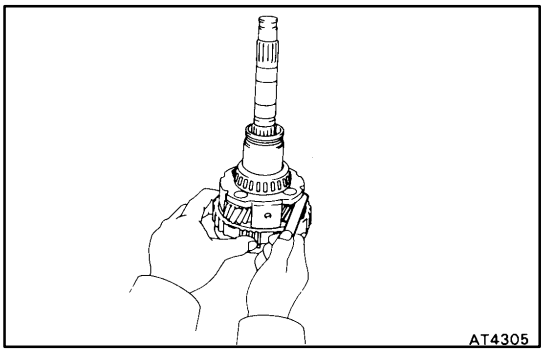

AX0G3–02

OVERDRIVE PLANETARY GEAR INSPECTION

MEASURE PLANETARY PINION GEAR THRUST CLEARANCE
Using a feeler gauge, measure the planetary pinion gear thrust clearance.
Standard clearance:
0.20 – 0.50 mm (0.0079 – 0.0197 in.)

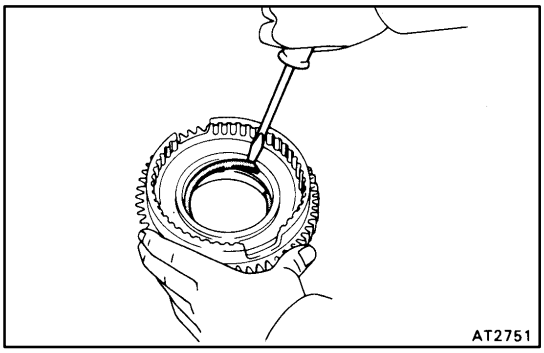

AX0GU–02

COUNTER DRIVE GEAR ASSEMBLY

1. INSTALL SNAP RING INTO COUNTER GEAR
Install the snap ring with a screwdriver.

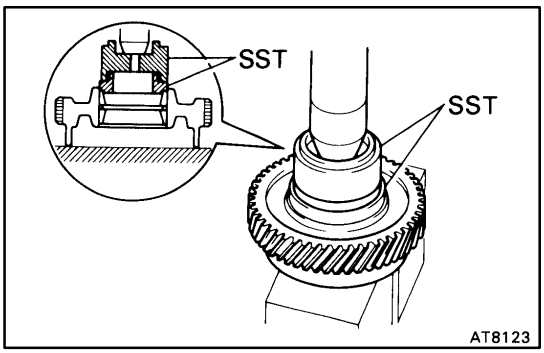

2. INSTALL OUTER RACES INTO COUNTER DRIVE GEAR
Using SST, press in the 2 outer races to the gear both side.
SST 09350–32014 (09351–32120, 09351–32150)
HINT: Press in the 2 outer races until they touch the snap ring. Tap the races in straight, so that they do not tilt.

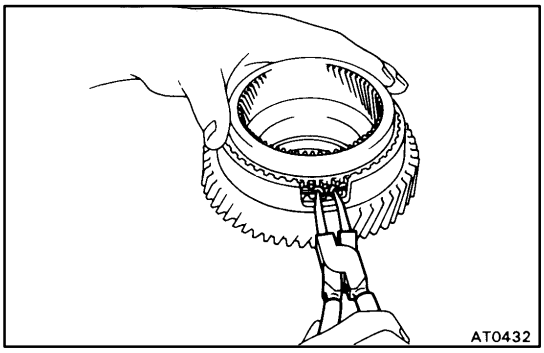

3. INSTALL OVERDRIVE PLANETARY RING GEAR INTO COUNTER DRIVEGEAR
While pushing down the ring gear, squeeze the snap ring end with a needle–nose pliers, and install it into the groove.
HINT: When the snap ring is fully seated, the end will be free.

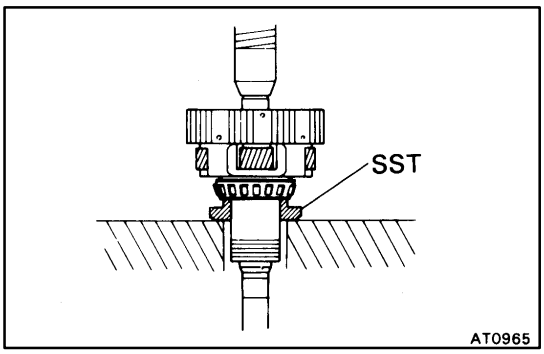

4. INSTALL REAR BEARING

Using SST, press in the bearing onto the shaft.
SST 09350–32014 (09351–32120)
HINT: Press in the bearing until the side surface of the inner race touches the shaft.

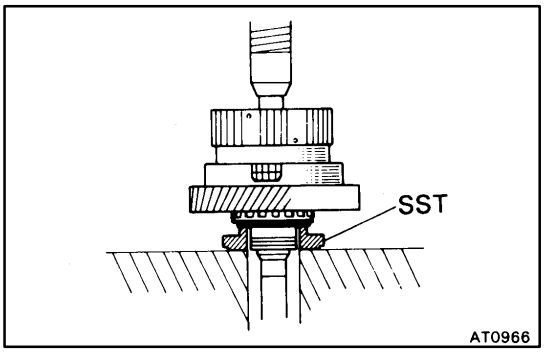

5. INSTALL COUNTER DRIVE GEAR AND FRONT BEARING

(a) Install the gear onto the shaft, and mesh the ring gear with the planetary pinions.
(b) Place the front bearing onto the shaft.
HINT: Hold the ring gear to prevent it from falling.

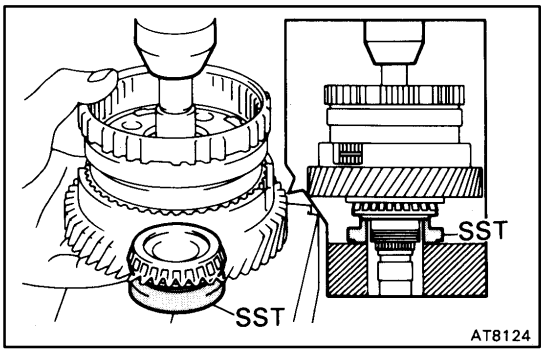

(c) Using SST, press in the bearing until there is slight play between the bearings.
SST 09350–32014 (09351–32120)

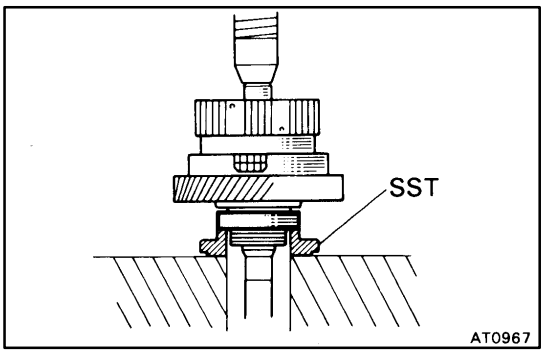

6. INSTALL INTERMEDIATE SHAFT BEARING

Using SST, press in the bearing until it slightly touches the front bearing of the counter drive gear.
SST 09350–32014 (09351–32120)
HINT: The counter drive gear can be turned lightly.

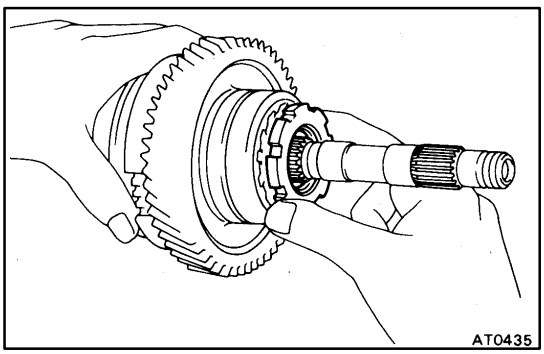

7. PLACE NEW LOCKING WASHER AND ADJUSTING NUT ONTO INTERMEDIATE SHAFT

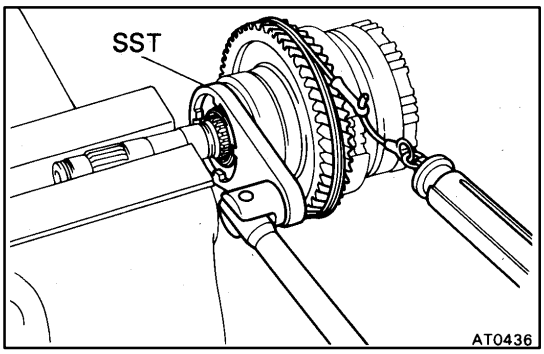

8. ADJUST PRELOAD OF COUNTER DRIVE GEAR

(a) Place SST onto the adjusting nut and hold the shaft in a vise with soft jaws.
SST 09350–32014 (09351–32080)

(b) Tighten the adjusting nut until the following gear starting load occurs with a tension gauge.
Preload (at starting):
9 – 15 N (920 – 1,530 gf, 2.0 – 3.4 lbf)
HINT: Turn the counter drive gear right and left several times before measuring the preload.

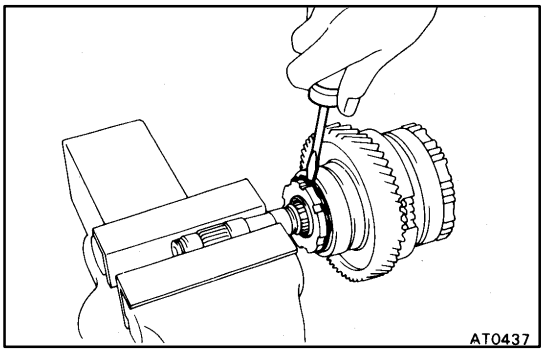

(c) Lock the adjusting nut with one tab on locking washer. Bend the locking washer tab until it is even with the adjusting nut groove.

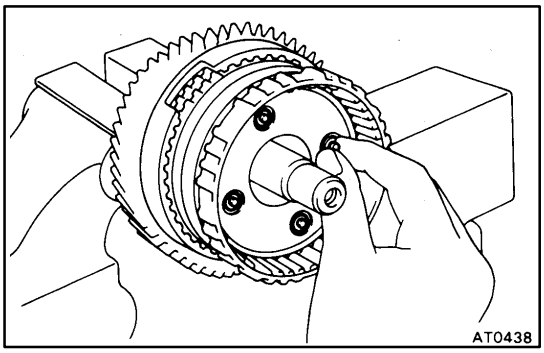

9. INSTALL PINION SHAFT PLUGS

Install the 4 plugs into the pinion shaft.

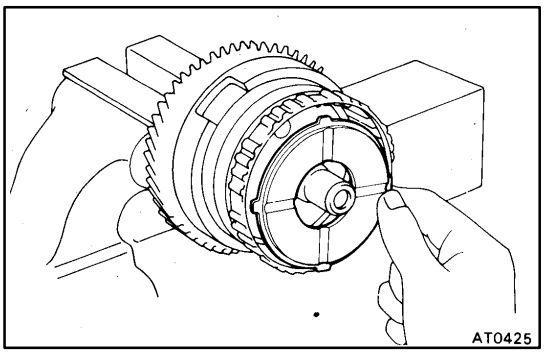

10. INSTALL NO.3 OVERDRIVE PLANETARY THRUST WASHER

Install the thrust washer, facing the groove toward the overdrive case.

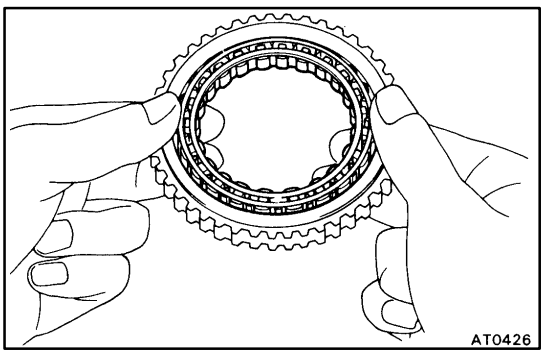

11. ASSEMBLE OVERDRIVE ONE–WAY CLUTCH

(a) Install the one–way clutch into the outer race.

(b) Install a retainer on both sides of the one–way clutch.

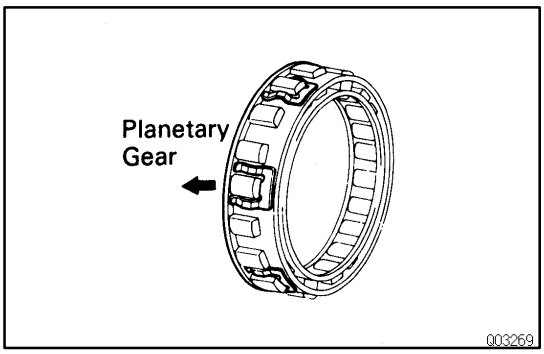

12. INSTALL OVERDRIVE ONE–WAY CLUTCH INTO HUB

Be sure that the one–way clutch is installed in the correct direction.

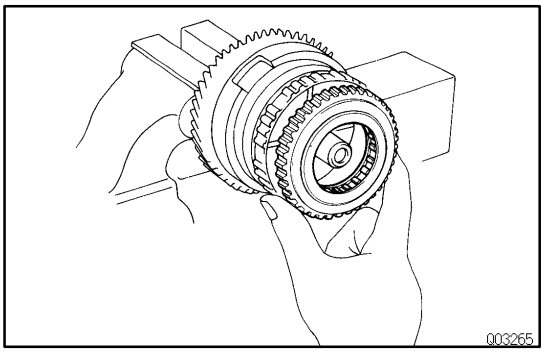

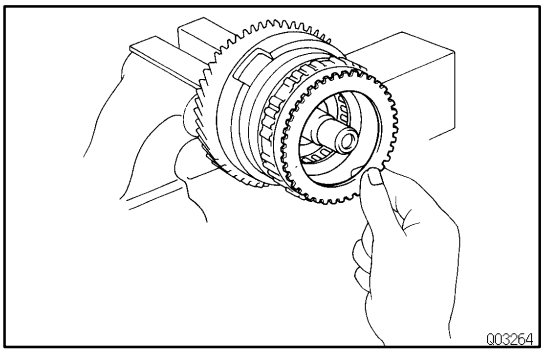

13. INSTALL RETAINING PLATE

(a) Place the retaining plate into the hub.

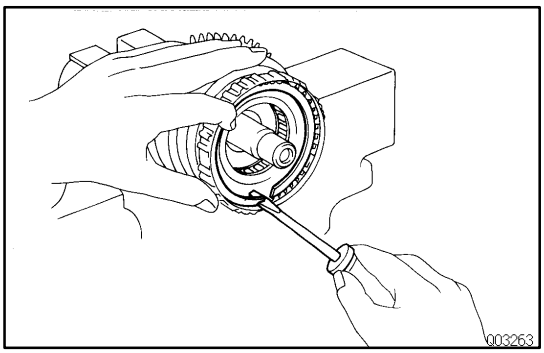

(b) Install the snap ring with a screwdriver.

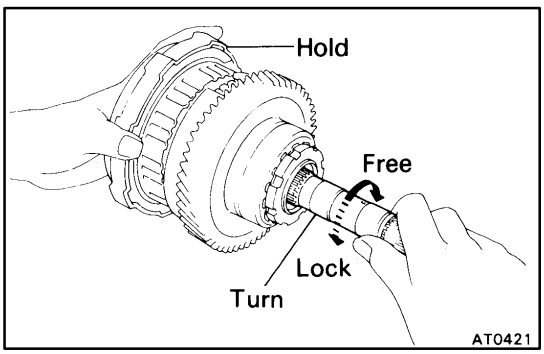

14. CHECK OPERATION OF ONE–WAY CLUTCH

(a) While turning the overdrive gear clockwise, install the overdrive direct clutch into the one–way clutch.

(b) Hold the overdrive direct clutch and turn the intermediate shaft. The shafts should turn freely clockwise and should lock counterclockwise.

(c) Remove the overdrive direct clutch.

AX0G4–02

OVERDRIVE CASE DISASSEMBLY

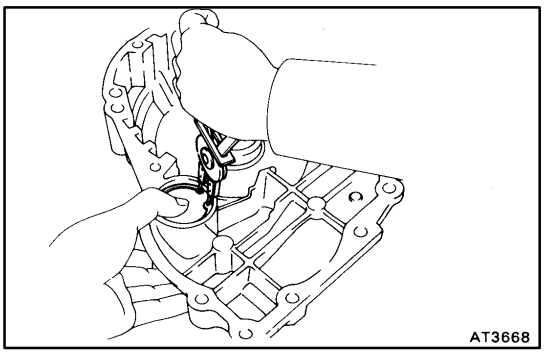

1. REMOVE C_0 ACCUMULATOR PISTON FROM OVERDRIVE CASE

(a) Using snap ring pliers, remove the snap ring.

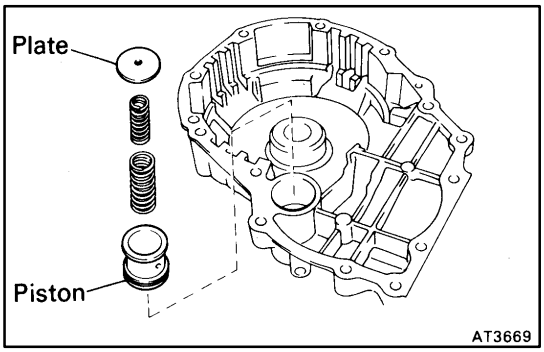

(b) Remove the retaining plate and two springs.
(c) Remove the accumulator piston.

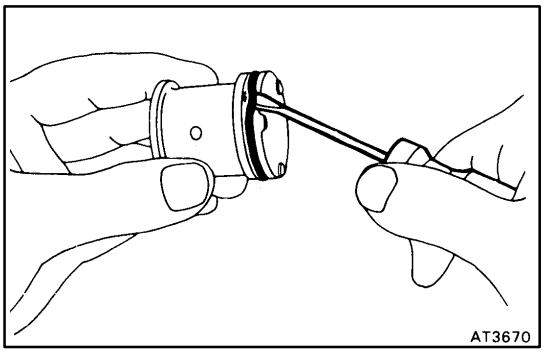

(d) Remove the O–ring from the piston.

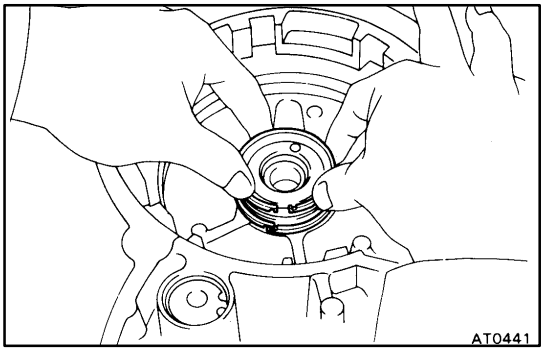

2. REMOVE OIL SEAL RINGS

Spread the 2 rings apart and remove them.

OVERDRIVE CASE INSPECTION

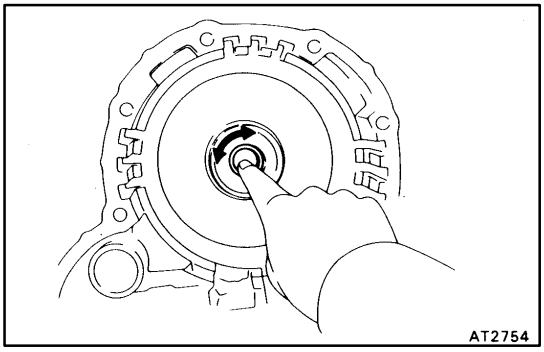

INSPECT OVERDRIVE CASE BEARING

Check that the bearing turns smoothly with your finger.

AX0G5–02

OVERDRIVE CASE ASSEMBLY

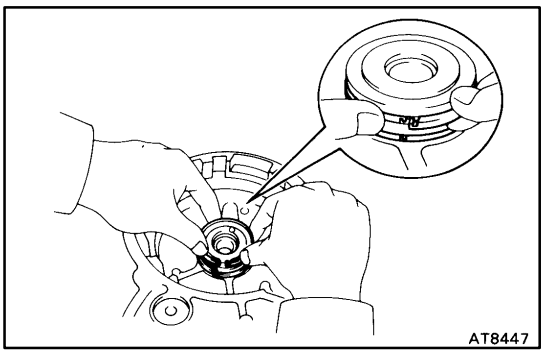

1. INSTALL OIL SEAL RINGS ON OVERDRIVE CASE

Install the oil seal rings to the O/D case groove, then snug them down by squeezing their ends together.

HINT: After installing the oil seal rings, check that they move smoothly.

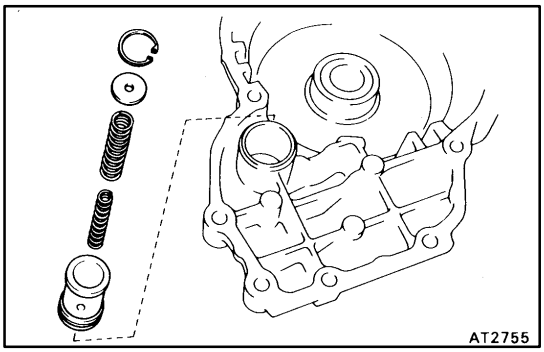

2. INSTALL C_0 ACCUMULATOR PISTON OF OVERDRIVE CLUTCH

(a) Install a new O–ring to the accumulator piston. Coat the O–ring with ATF.
(b) Install the accumulator piston, 2 springs and plate.
(c) Install the snap ring with snap ring pliers.

AX0G6–02

OVERDRIVE BRAKE ASSEMBLY

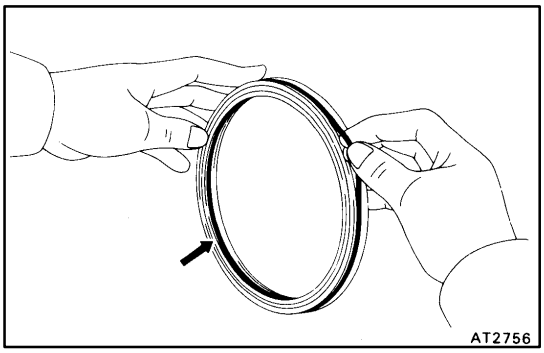

1. INSTALL PISTON INTO DRUM

(a) Install the new O–rings to the piston. Coat the O–rings with ATF.

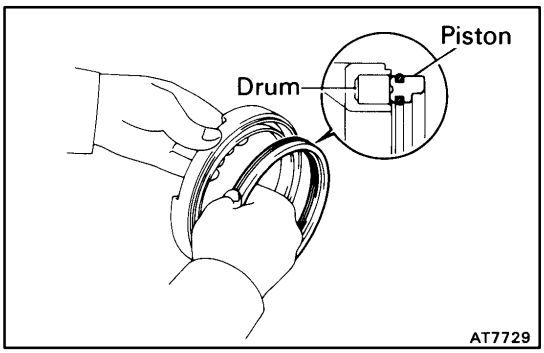

(b) Press the piston into the drum, being careful not to damage the O–rings.

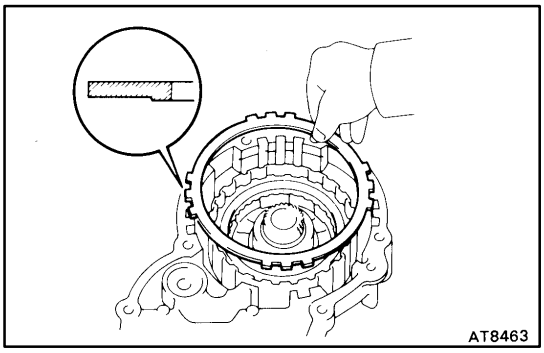

2. INSTALL FLANGE, DISCS AND PLATES

(a) Install the flange, facing the flat end upward.

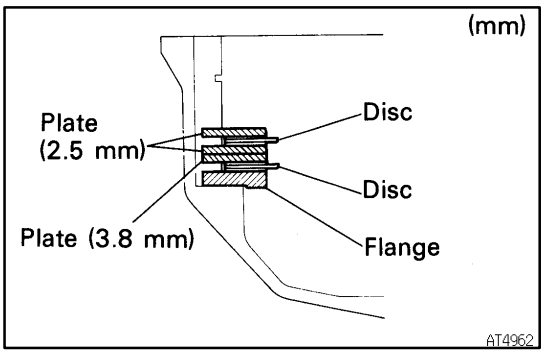

(b) Install the discs and plates.
Install in order: P=Plate D=Disc
Flange – D – P – P – D – P
HINT: There are 2 different thickness plates, as shown in the illustration.

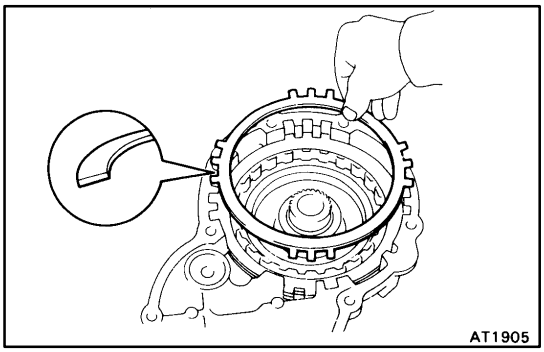

(c) Install the cushion plate facing the rounded end upward.

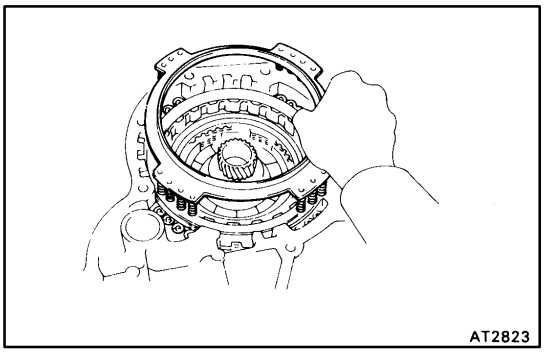

3. INSTALL PISTON RETURN SPRING

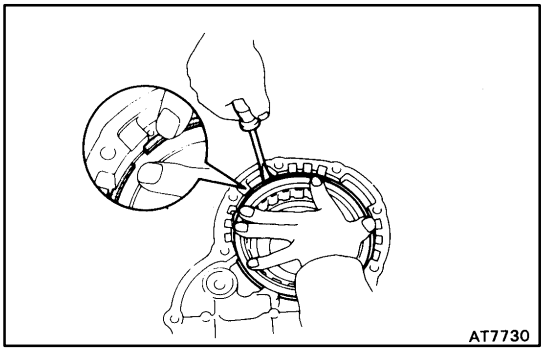

4. INSTALL SNAP RING INTO CASE
Be sure the end gap of the snap ring is not aligned with one of the cutouts.

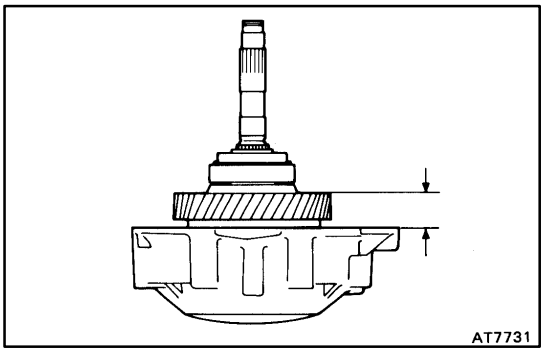

5. INSTALL OVERDRIVE GEAR ASSEMBLY ONTO CASE
While turning the overdrive gear clockwise, install the overdrive gear assembly to the case.
If the overdrive gear assembly is properly installed to the overdrive case, the clearance between them will be about 24 mm (0.94 in.).

VALVE BODY

COMPONENTS

AX0G7–02

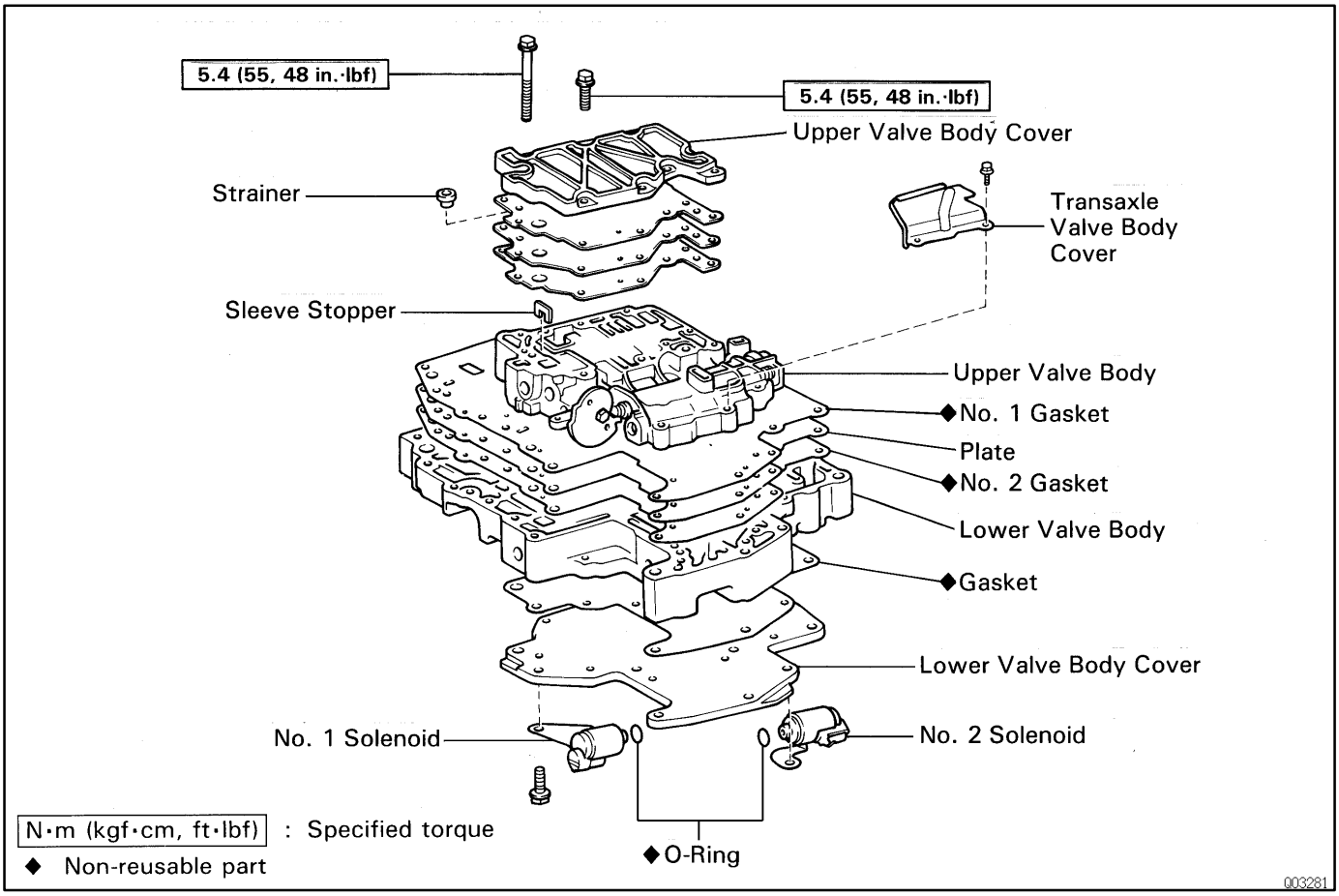

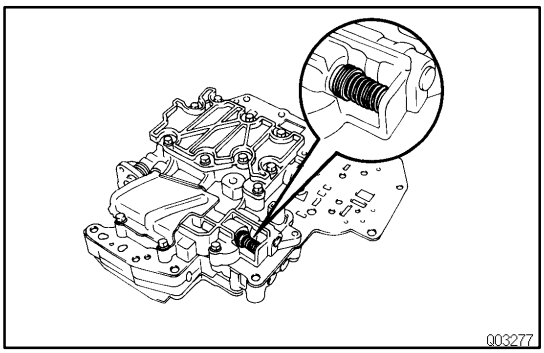

AX0G8–02

VALVE BODY DISASSEMBLY

1. NOTE THE NUMBERS OF ADJUSTING RINGS

HINT: Count the number of adjusting rings before disassembly of the valve body because the throttle pressure is changed according to the number. (Some of the valve bodies do not have any adjusting rings).

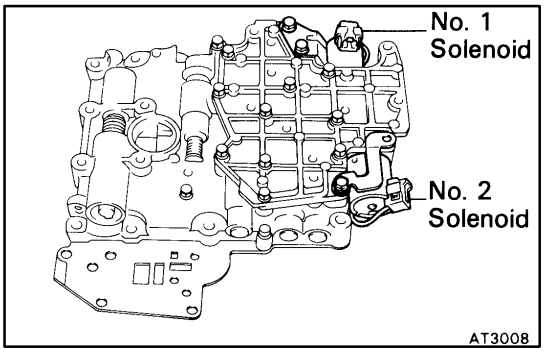

2. REMOVE SOLENOIDS

(a) Remove the No.1 and No.2 solenoids.

(b) Remove the O–rings from the solenoids.

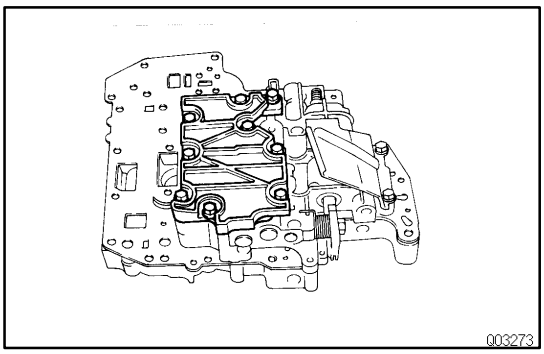

3. REMOVE UPPER VALVE BODY COVER

Remove the 9 bolts and upper valve body cover.

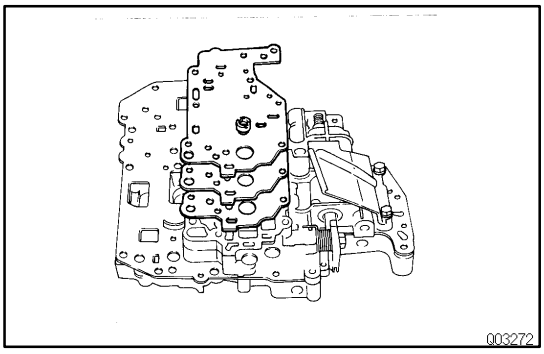

4. REMOVE STRAINER GASKETS, PLATE AND SLEEVE STOPPER FROM UPPER VALVE BODY

(a) Remove the strainer, 2 gaskets and plate.

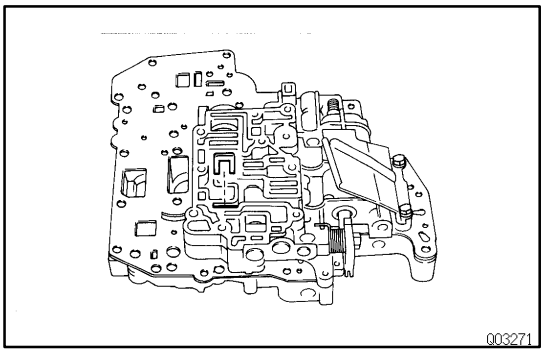

(b) Remove the sleeve stopper.

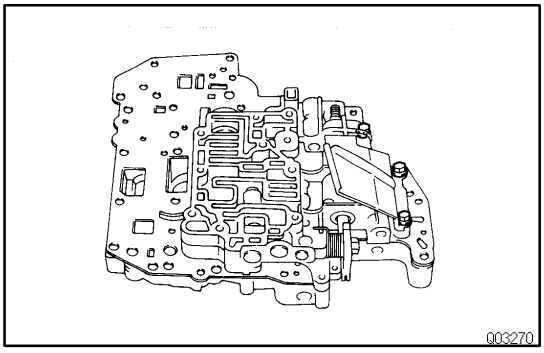

5. REMOVE BOLTS FROM UPPER VALVE BODY

Remove the 3 bolts from the upper valve body.

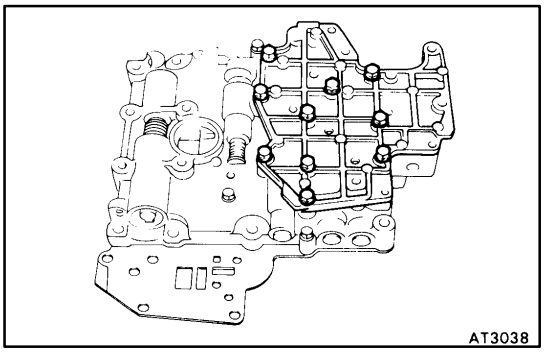

6. REMOVE LOWER VALVE BODY COVER

(a) Remove the 10 bolts.

(b) Remove the lower valve body cover and gasket.

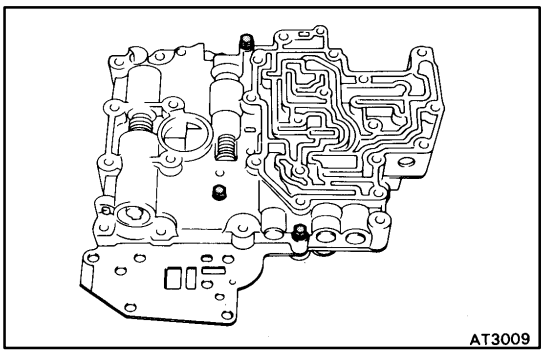

7. REMOVE BOLTS FROM LOWER VALVE BODY

Remove the 3 bolts from lower valve body.

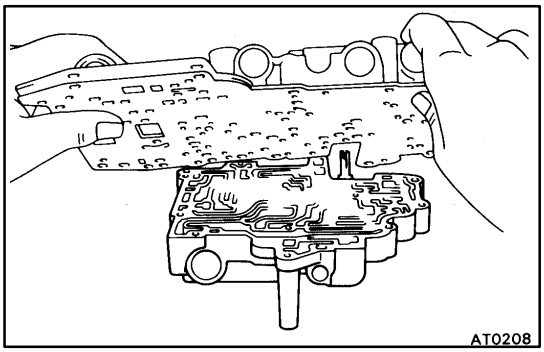

8. LIFT OFF LOWER VALVE BODY AND PLATE AS SINGLE UNIT

Hold the plate to the lower valve body and lift off the lower valve body.

HINT: Be careful that the check balls do not fall out.

9. REMOVE PLATE AND GASKETS

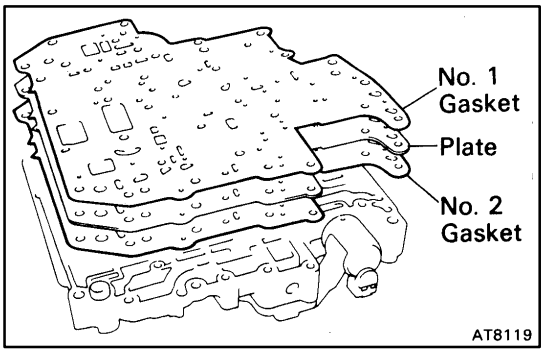

AX0G9–02

VALVE BODY ASSEMBLY

1. POSITION PLATE AND NEW GASKETS ON LOWER VALVE BODY

Position the new No.2 gasket, the plate and then the new No.1 gasket on the lower valve body.

HINT: Since No.1 gasket and No.2 gasket are similar use the illustration below to discriminate between them.

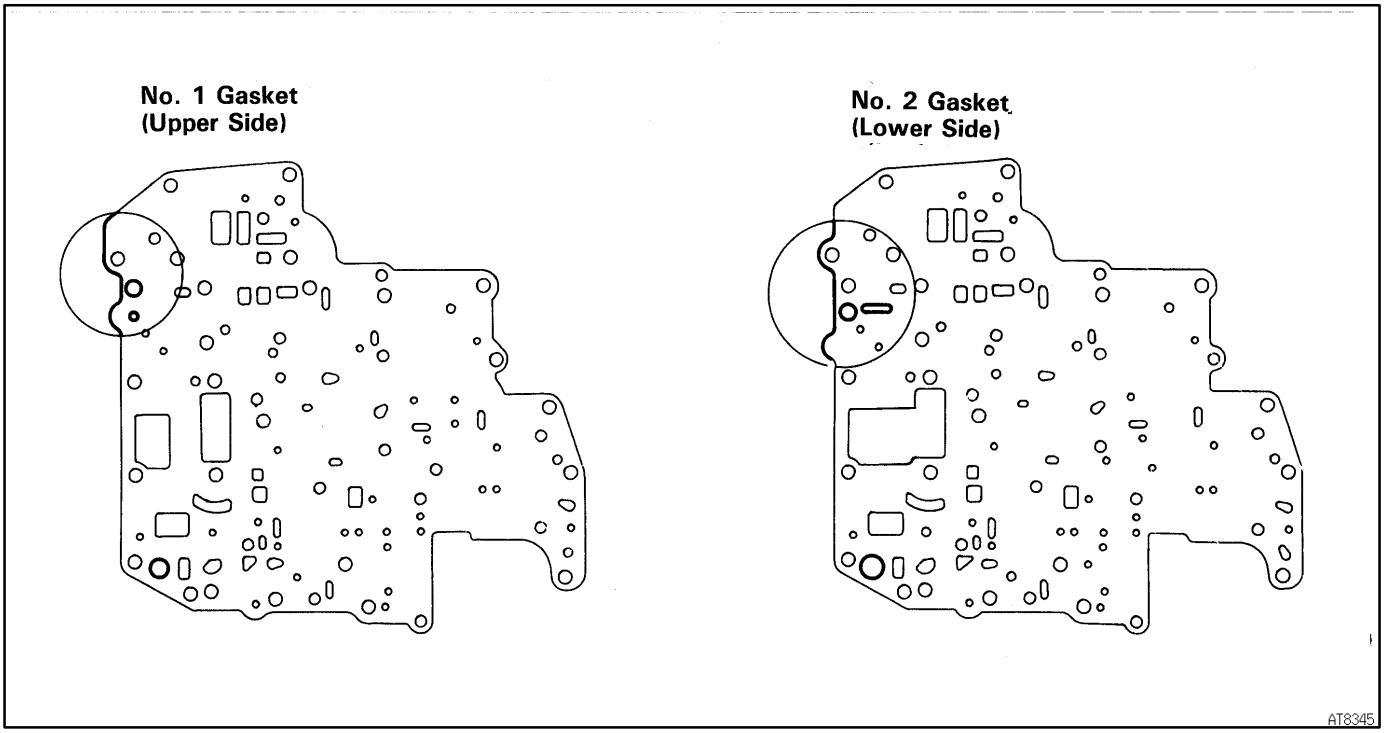

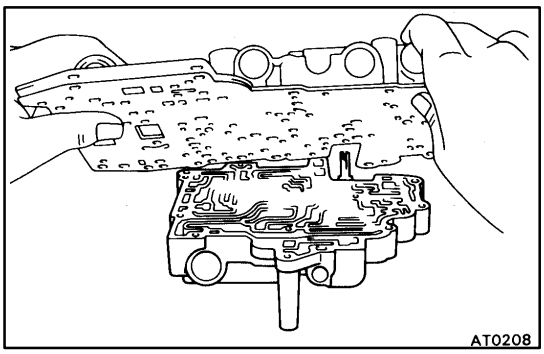

2. PLACE LOWER VALVE BODY WITH PLATE AND GASKETS ON UPPER VALVE BODY

HINT: Hold the lower valve body, gaskets and plate securely so they do not separate.

Align each bolt hole in the valve bodies with the gaskets and plate.

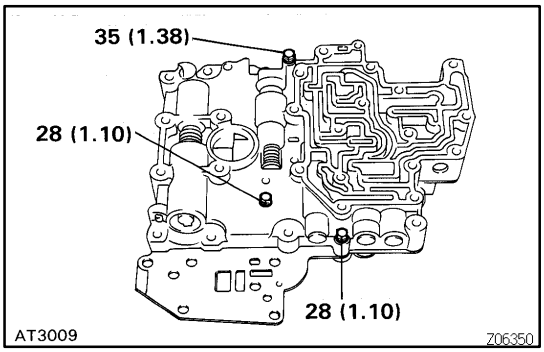

3. INSTALL AND FINGER TIGHTEN BOLTS IN LOWER VALVE BODY TO SECURE UPPER VALVE BODY

Install and finger tighten the 3 bolts.

HINT: Each bolt length (mm, in.) is indicated in the illustration.

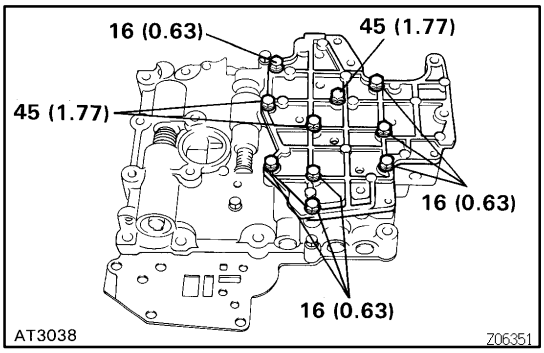

4. INSTALL LOWER VALVE BODY COVER

(a) Install the lower valve body cover over the new gasket.

(b) Install and finger tighten the 10 bolts.

HINT: Each bolt length (mm, in.) is indicated in the illustration.

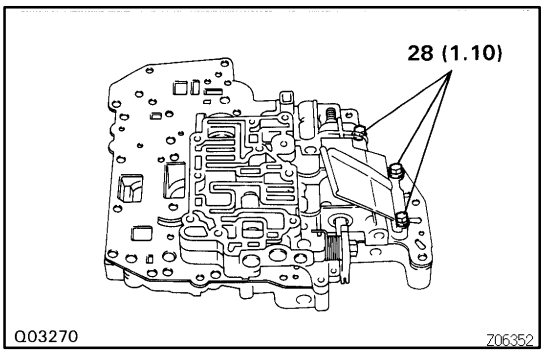

5. INSTALL AND FINGER TIGHTEN BOLTS IN UPPER VALVE BODY

Install and finger tighten the 3 bolts.

HINT: Each bolt length (mm, in.) is indicated in the illustration.

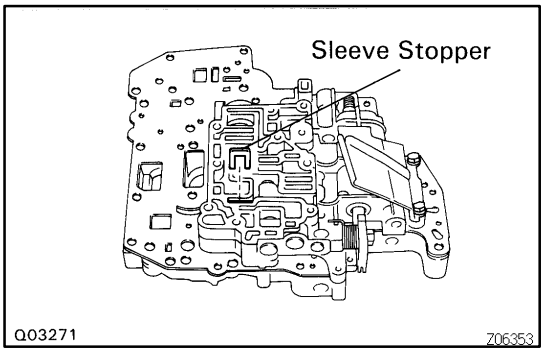

6. INSTALL SLEEVE STOPPER

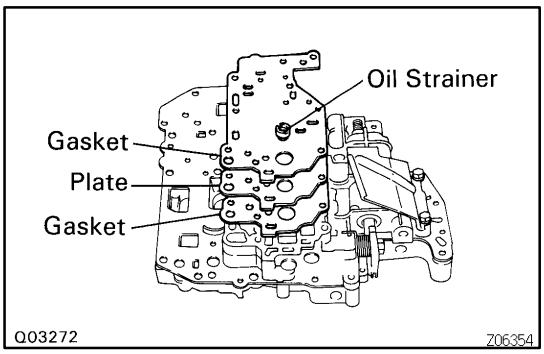

7. INSTALL UPPER VALVE BODY COVER GASKETS, PLATE AND THROTTLE MODULATOR OIL STRAINER

(a) Position a new gasket and plate and then another new gasket.
HINT: The gaskets are not identical, but can be installed in any order.

(b) Install the oil strainer onto the gasket.

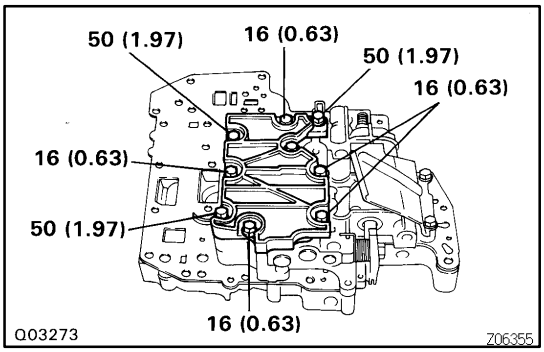

8. INSTALL UPPER VALVE BODY COVER

(a) Position the upper valve body cover.

(b) Install and finger tighten the 9 bolts.
HINT: Each bolt length (mm, in.) is indicated in the illustration.

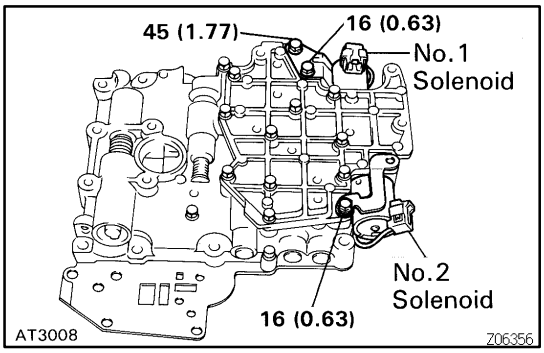

9. INSTALL SOLENOIDS

(a) Install the new O–rings on the solenoids.

(b) Install the No.1 and No.2 solenoids.

(c) Install and finger tighten the 3 bolts.
HINT: Each bolt length (mm, in.) is indicated in the illustration.

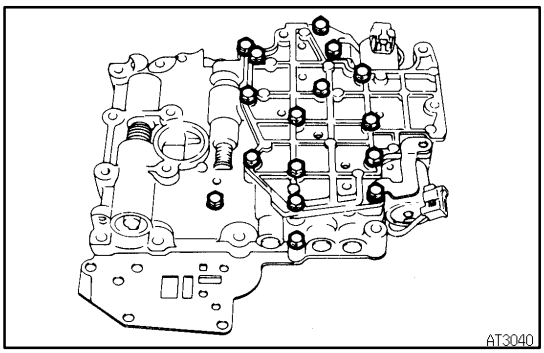

10. TIGHTEN BOLTS OF UPPER AND LOWER VALVE BODIES

(a) Tighten the 16 bolts in the lower valve body.
Torque: 5.4 N·m (55 kgf·cm, 48 in.·lbf)

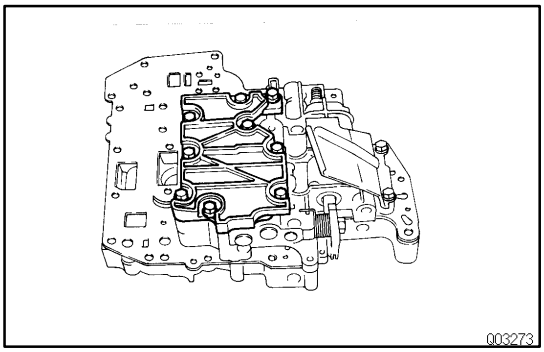

(b) Tighten the 12 bolts in the upper valve body.
Torque: 5.4 N·m (55 kgf·cm, 48 in.·lbf)

UPPER VALVE BODY
COMPONENTS

AX0GA–02

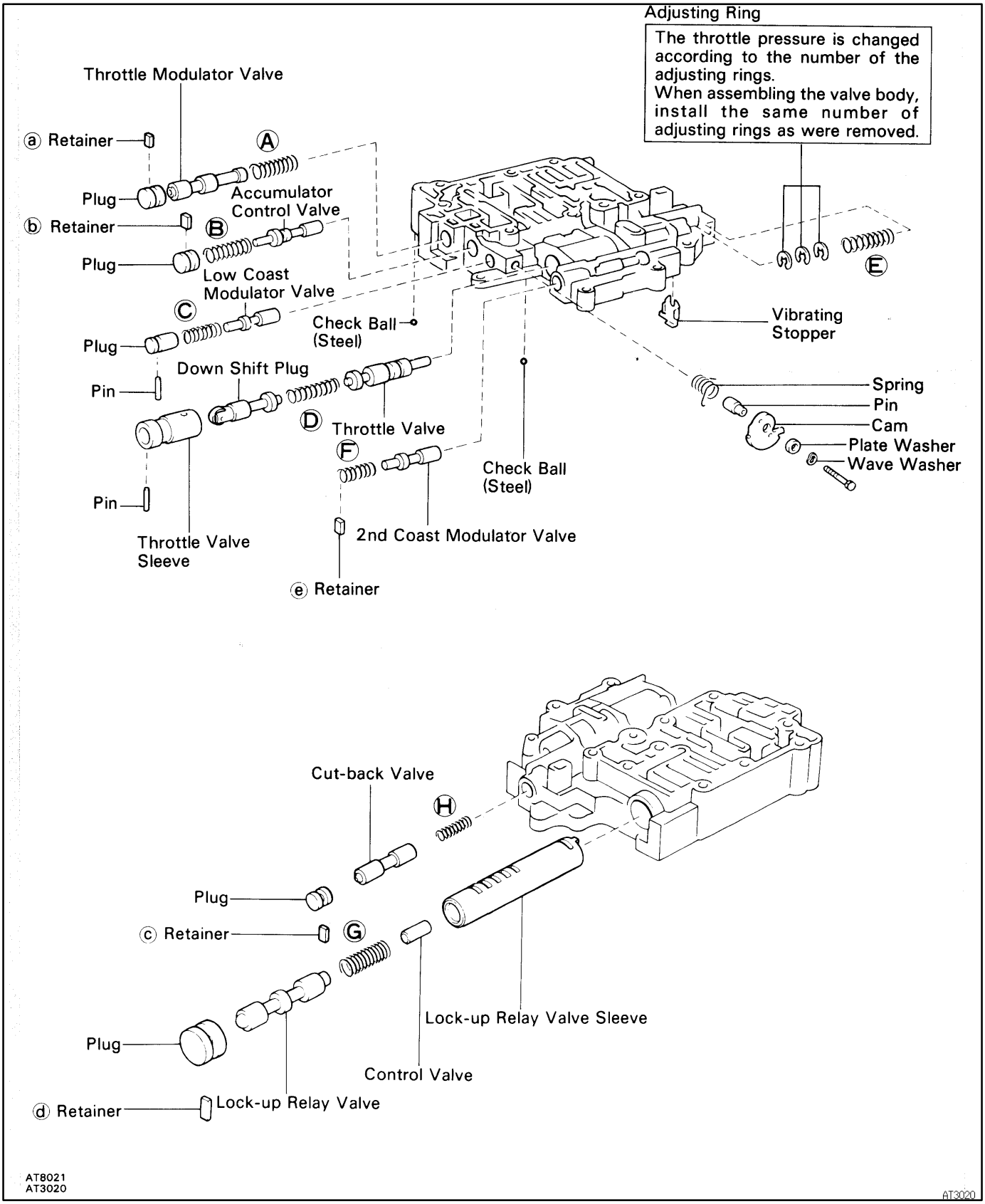

AX0GB–02

VALVE BODY SPRINGS SPECIFICATIONS

HINT: During re–assembly please refer to the spring specifications below to help you to discriminate between the different springs.

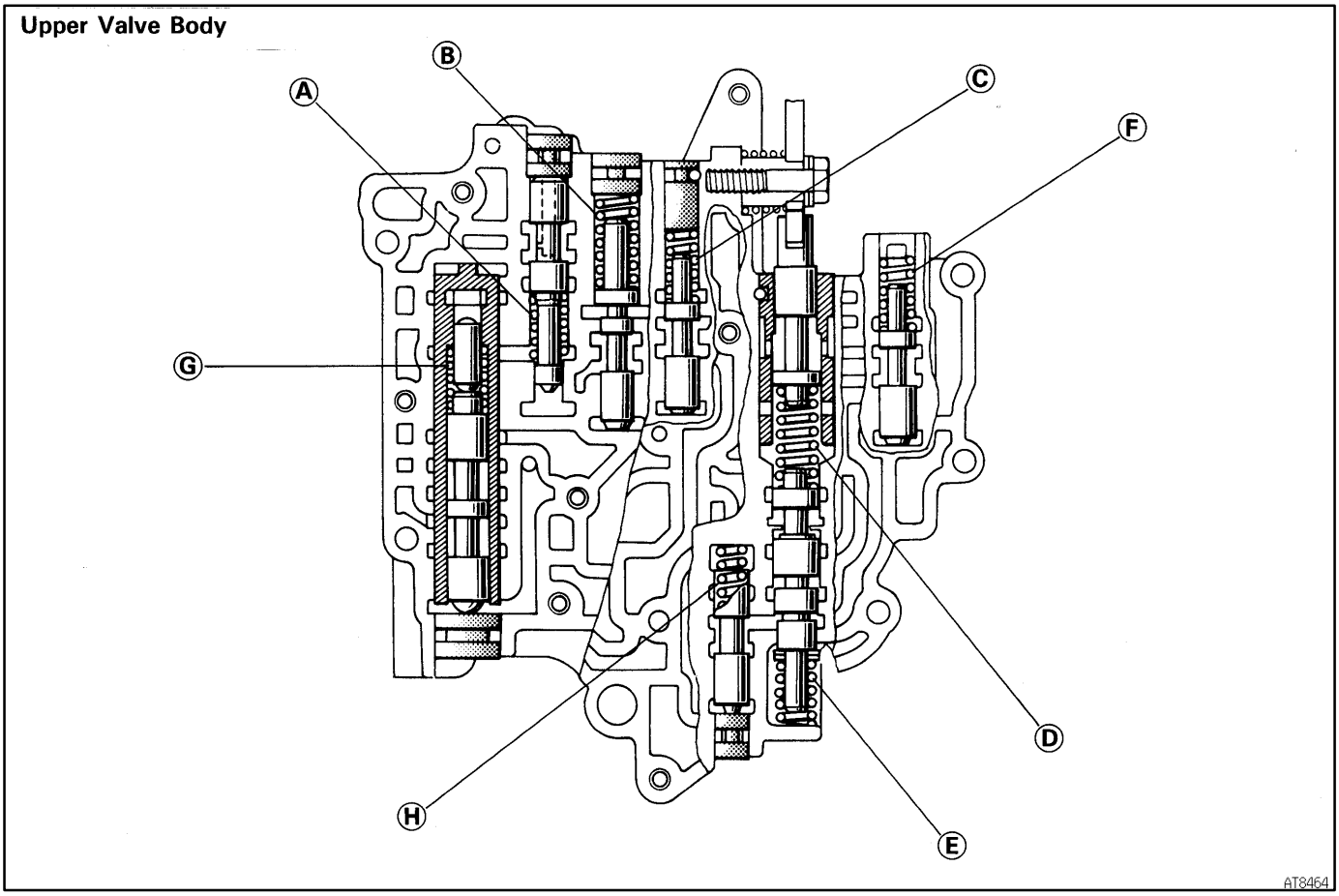

	Spring (Color)	Free Length / Coil Outer Diameter mm (in.)	Number of Coils
@@@@@: [c A]	Throttle Modulator Spring (None)	21.70 / 9.50 (0.8543 / 0.3740)	9.5
@@@@@: [c B]	Accumulator Control Spring (Yellow)	28.06 / 10.60 (1.1047 / 0.4173)	13.0
@@@@@: [c C]	Low Coast Modulator Spring (None)	21.60 / 7.90 (0.8504 / 0.3110)	11.5
@@@@@: [c D]	Down Shift Valve Spring (Yellow)	29.76 / 8.73 (1.1717 / 0.3437)	13.5

@@@@@: [c E]	Throttle Valve Spring (None)	30.70 / 9.20 (1.2087 / 0.3622)	9.5
@@@@@: [c F]	Second Coast Modulator Valve Spring (Light Green)	20.93 / 8.50 (0.8240 / 0.3364)	10.0
@@@@@: [c G]	Lock–up Relay Valve spring (Green)	26.56 / 10.20 (1.0457 / 0.4016)	11.5
@@@@@: [c H]	Cut–back Valve Spring (None)	21.80 / 6.00 (0.8583 / 0.2362)	13.5

RETAINERS, PINS, VIBRATING STOPPER AND CHECK BALLS LOCATION

AX0GC–02

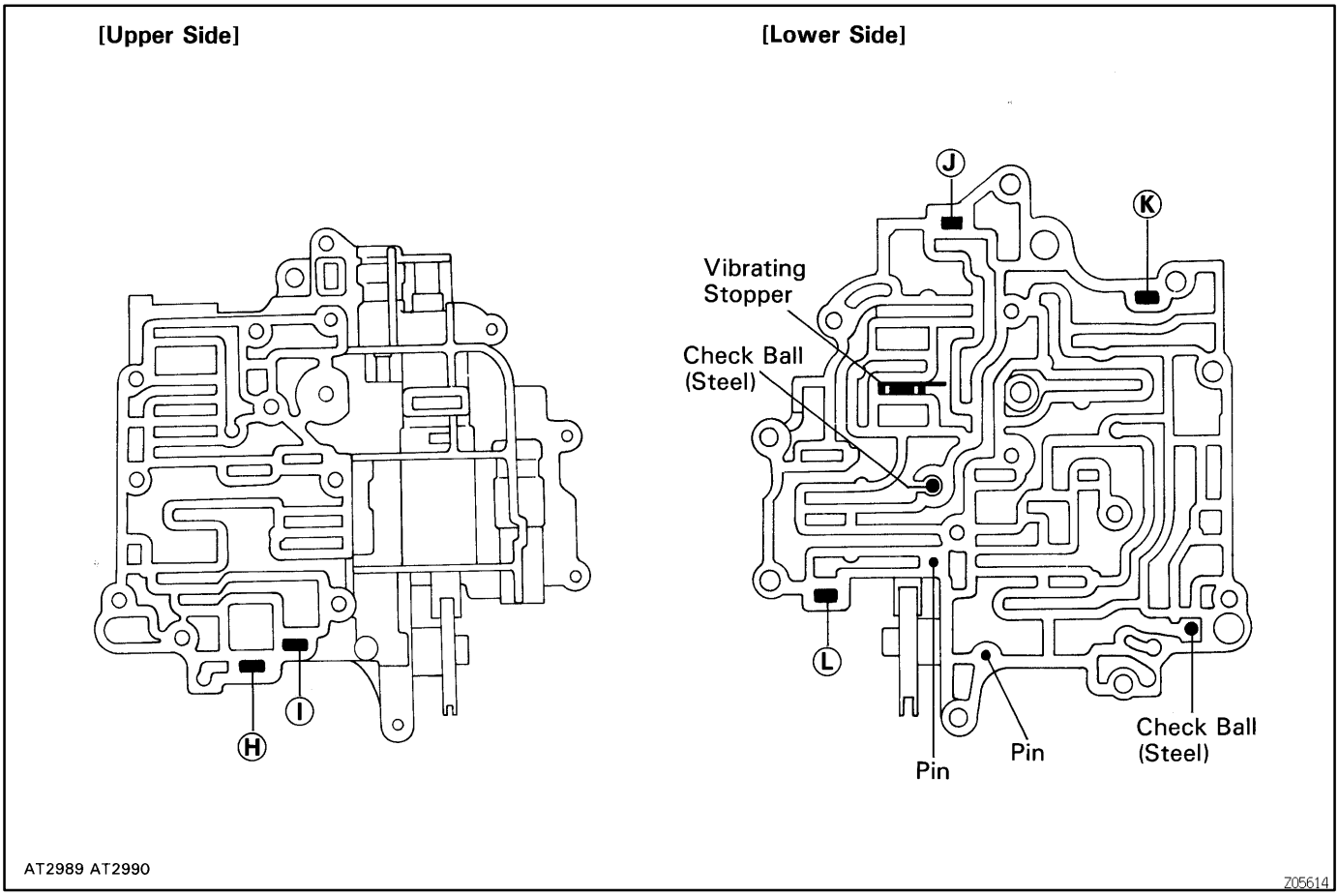

	Retainer	Height / Width / Thickness mm (in.)
@@@@@: [c H]	Throttle Modulator Valve	9.2 / 5.0 / 3.2 (0.362 / 0.197 / 0.126)
@@@@@: [c I]	Accumulator Control Valve	11.5 / 5.0 / 3.2 (0.453 / 0.197 / 0.126)
@@@@@: [c J]	Cut–back Valve	9.2 / 5.0 / 3.2 (0.362 / 0.197 / 0.126)
@@@@@: [c K]	Lock–up Relay Valve	15.0 / 5.0 / 3.2 (0.591 / 0.197 / 0.126)
@@@@@: [c L]	2nd Coast Modulator Valve	15.0 / 5.0 / 3.2 (0.591 / 0.197 / 0.126)

LOWER VALVE BODY

AX0GV–02

COMPONENTS

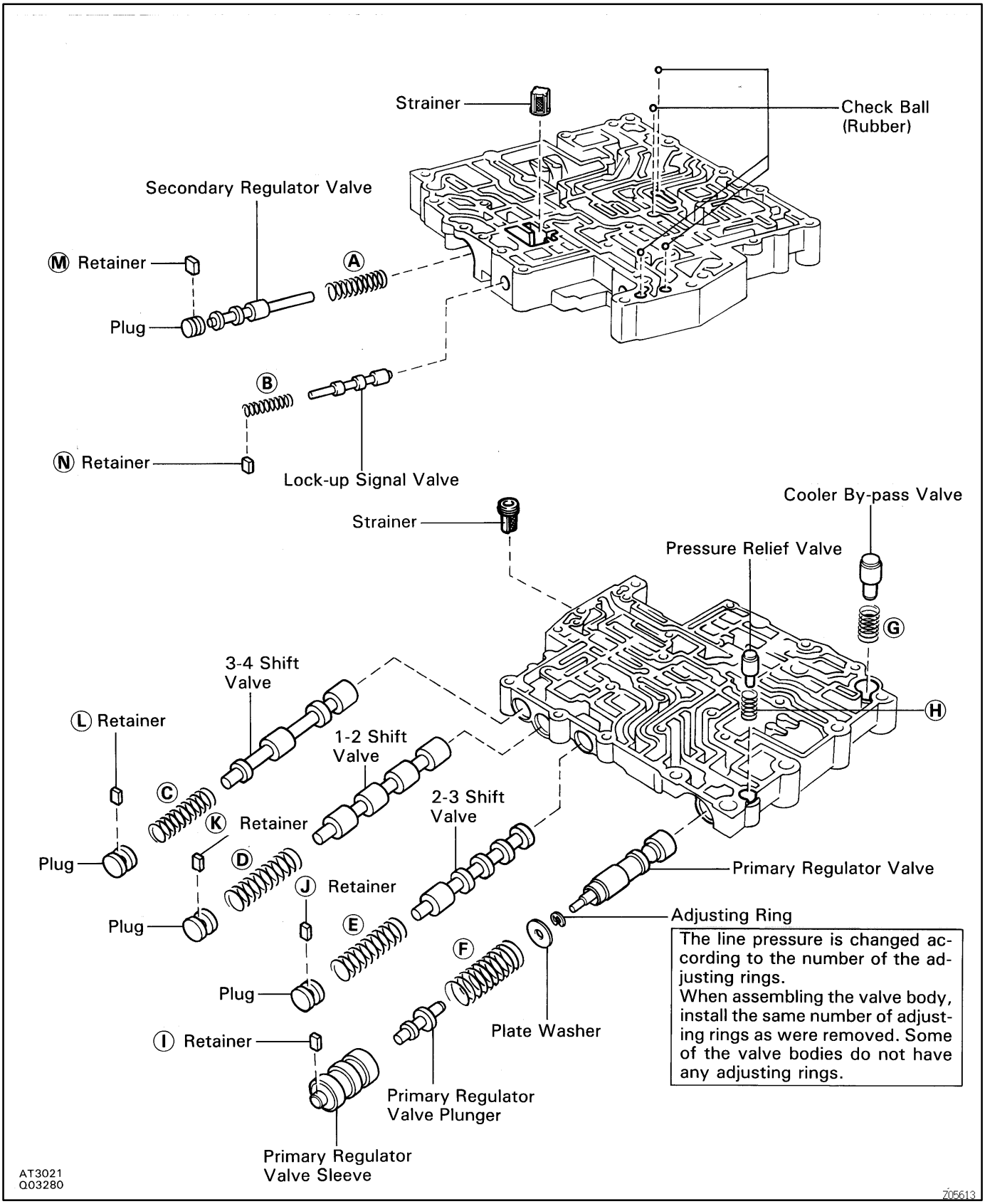

AX0GD–02

VALVE BODY SPRINGS SPECIFICATIONS

HINT: During re–assembly please refer to the spring specifications below to help you to discriminate between the different springs.

Lower Valve Body

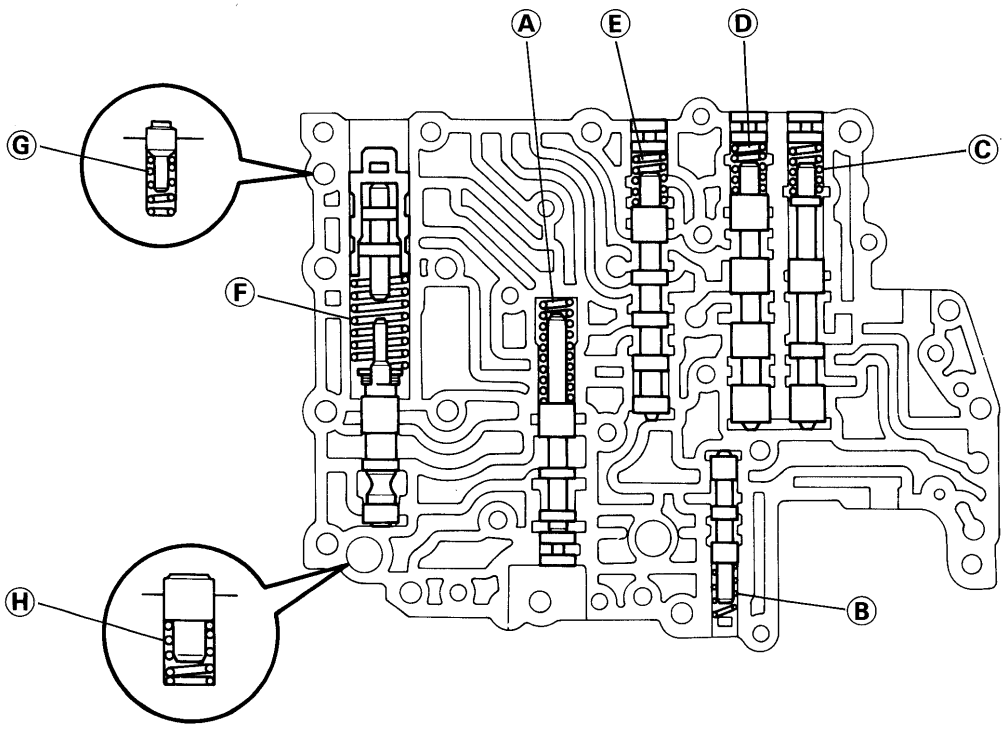

000413

	Spring (Color)	Free length / Outer diameter mm (in.)	Number of Coils
@@@@@: [c A]	Secondary Regulator Valve Spring (None)	43.60 / 10.90 (1.7165 / 0.4291)	11.5
@@@@@: [c B]	Lock–up Signal Valve Spring (None)	30.00 / 8.20 (1.1811 / 0.3228)	11.5
@@@@@: [c C]	3–4 Shift Valve Spring (None)	29.27 / 9.70 (1.1524 / 0.3819)	10.5

@@@@@: [c D]	1–2 Shift Valve Spring (None)	29.27 / 9.70 (1.1524 / 0.3819)	10.5
@@@@@: [c E]	2–3 Shift Valve Spring (None)	29.27 / 9.70 (1.1524 / 0.3819)	10.5
@@@@@: [c F]	Primary Regulator Valve Spring (None)	66.65 / 18.60 (2.6240 / 0.7323)	12.5
@@@@@: [c G]	Cooler By–pass Valve Spring (None)	19.90 / 11.00 (0.7835 / 0.4331)	8.5
@@@@@: [c H]	Pressure Relief Valve Spring (None)	11.20 / 6.40 (0.4409 / 0.2520)	7.5

AX0GE–02

RETAINER, STRAINER AND CHECK BALLS LOCATION

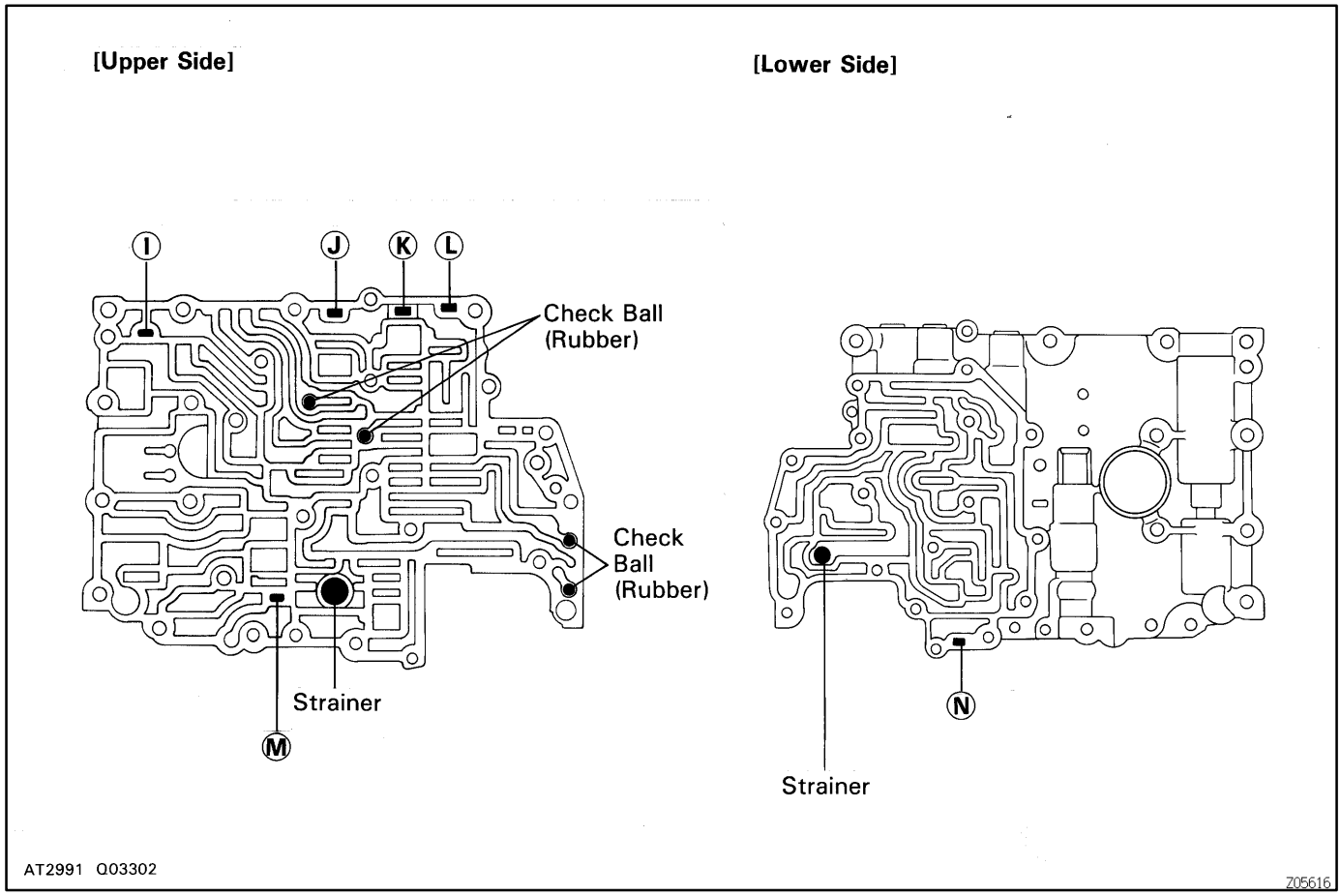

	Retainer	Height / Width / Thickness mm (in.)
@@@@@: [c I]	Primary Regulator Valve	9.2 / 5.0 / 3.2 (0.362 / 0.197 / 0.128)
@@@@@: [c J]	2–3 Shift Valve	8.0 / 6.0 / 3.2 (0.315 / 0.236 / 0.126)
@@@@@: [c K]	1–2 Shift Valve	9.2 / 5.0 / 3.2 (0.362 / 0.197 / 0.126)
@@@@@: [c L]	3–4 Shift Valve	8.0 / 6.0 / 3.2 (0.315 / 0.236 / 0.126)
@@@@@: [c M]	Secondary Regulator Valve	13.0 / 6.0 / 3.2 (0.512 / 0.236 / 0.126)
@@@@@: [c N]	Lock–up Signal Vave	15.0 / 5.0 / 3.2 (0.591 / 0.197 / 0.126)

DIFFERENTIAL ASSEMBLY

AX0GF–02

COMPONENTS

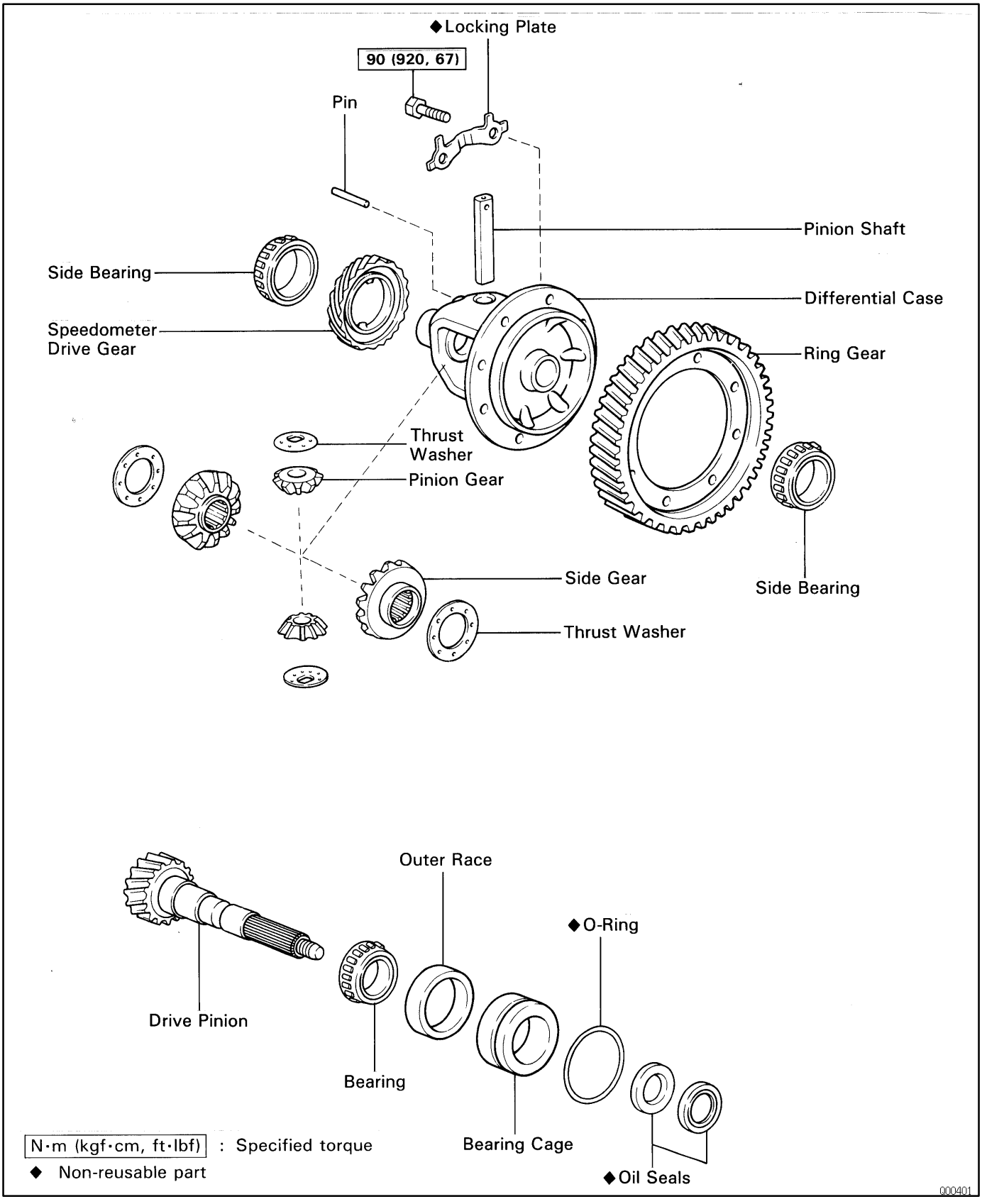

AX0GG–02

DIFFERENTIAL CASE DISASSEMBLY

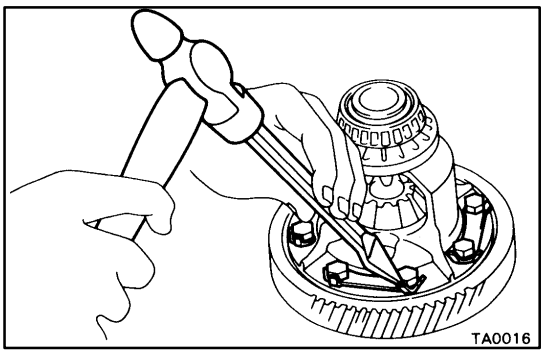

1. REMOVE RING GEAR

(a) Loosen the staked part of the lock plate.

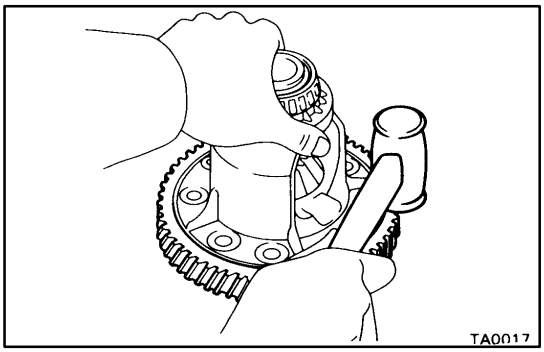

(b) Remove the 8 bolts and locking plates.

(c) Using a copper hammer, tap on the ring gear to remove it from the case.

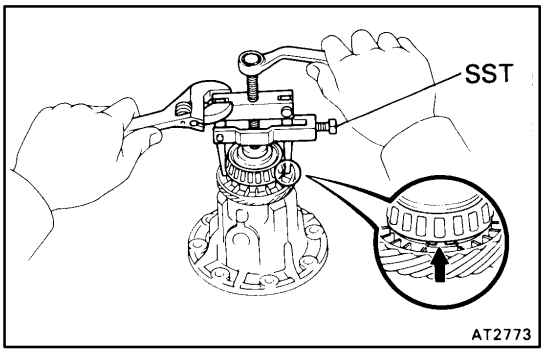

2. REMOVE SIDE BEARINGS

Fasten SST under the bearing above the cutouts on the speedometer drive gear. Remove the bearing from the case.

SST 09502–10012

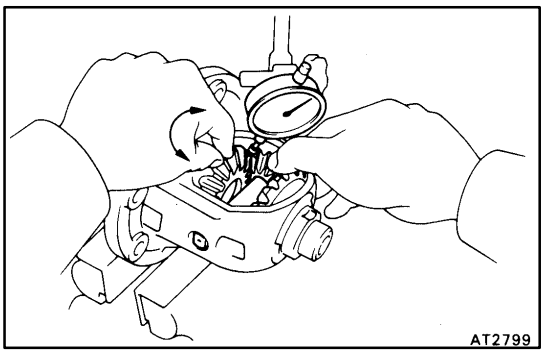

3. CHECK SIDE GEAR BACKLASH

Using a dial gauge, measure the backlash of each side gear while holding one pinion toward the case.

Standard backlash:

0.05 – 0.20 mm (0.0020 – 0.0079 in.)

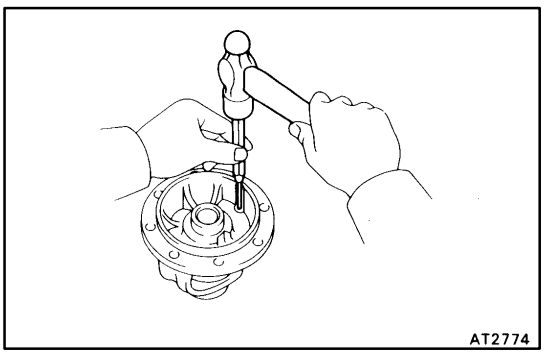

4. DISASSEMBLE DIFFERENTIAL CASE

(a) Drive out the pinion shaft lock pin from the side on which the ring gear is installed.

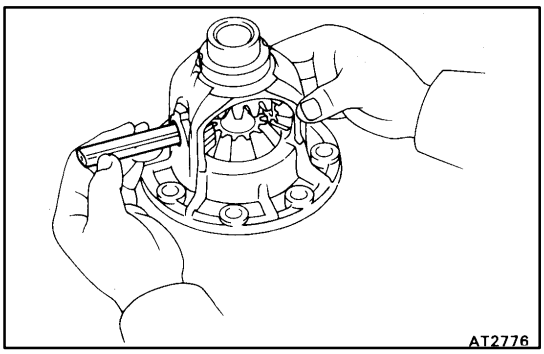

(b) Remove the pinion shaft from the case.
(c) Remove the 2 pinions and 2 side gears with the 4 thrust washers.

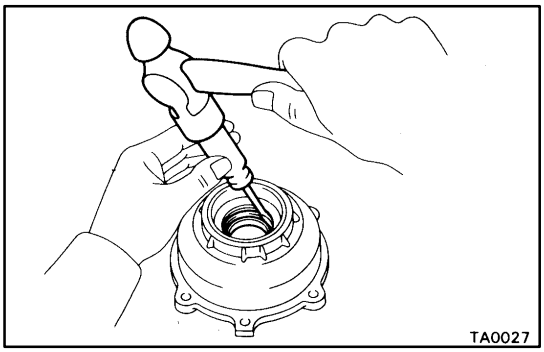

5. REMOVE LH OIL SEAL

Using a hammer and screwdriver, remove the oil seal.

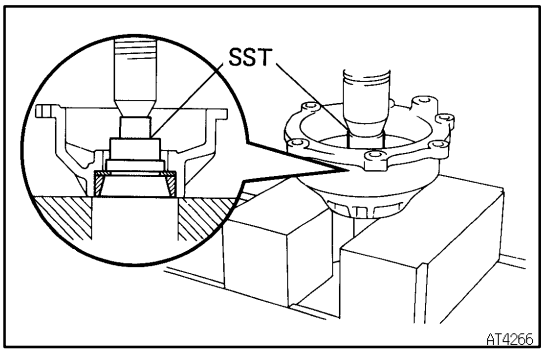

6. REMOVE BEARING OUTER RACE FROM LH SIDE BEARING RETAINER

Using SST, press out the outer race and shim.
SST 09350–32014 (09351–32090)

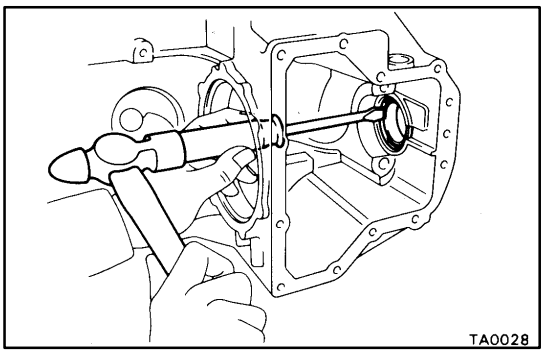

7. REMOVE RH OIL SEAL

Using a hammer and screwdriver, remove the oil seal.

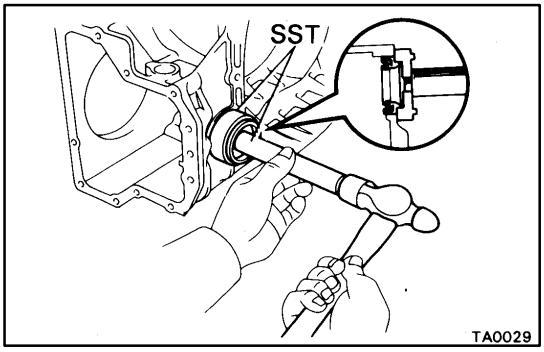

AX0GH–02

DIFFERENTIAL CASE ASSEMBLY

1. INSTALL RH OIL SEAL

(a) Using SST, drive in a new oil seal until its surface is flush with the surface of the case.
SST 09350–32014 (09351–32130, 09351–32150)
(b) Coat the oil seal lip with MP grease.

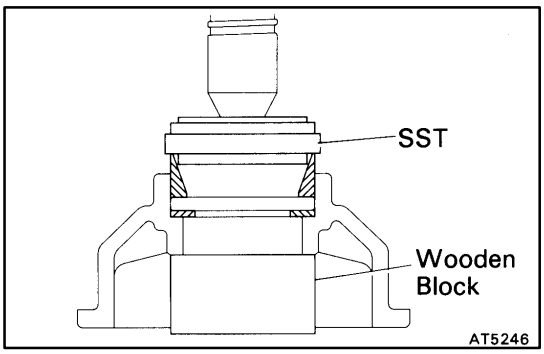

2. INSTALL BEARING OUTER RACE TO LH SIDE BEARING RETAINER

(a) Place the shim onto the retainer.

(b) Using SST, press a new outer race into the retainer.
SST 09350–32014 (09351–32111, 09351–32130)
HINT: Use the 2.60 mm (0.1024 in.) thick thim.

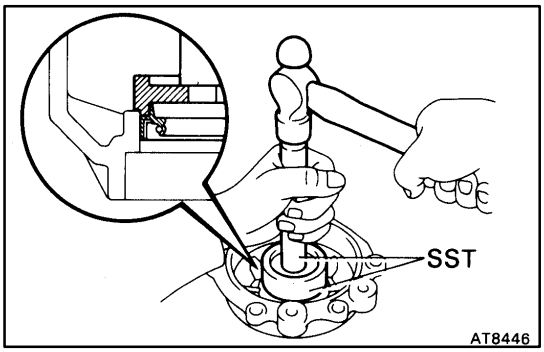

3. INSTALL LH OIL SEAL

(a) Using SST, drive in a new oil seal.
SST 09350–32014 (09351–32130, 09351–32150)
Oil seal drive in depth:
2.7 mm (0.106 in.)

(b) Coat the oil seal lip with MP grease.

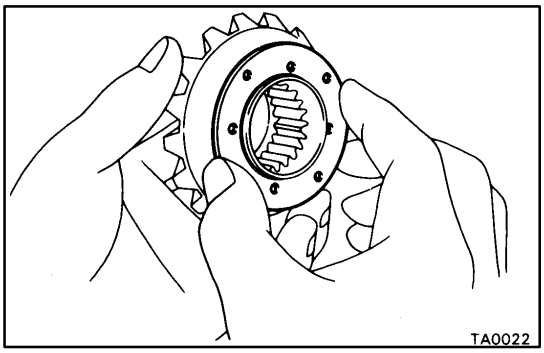

4. ASSEMBLE DIFFERENTIAL CASE

(a) Install the removed thrust washers to the side gears.

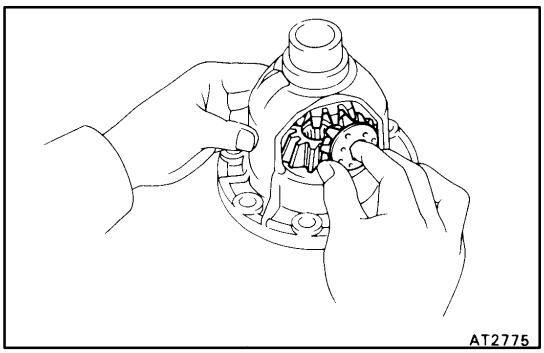

(b) Install the side gears with thrust washers, pinion thrust washers and pinion gears.

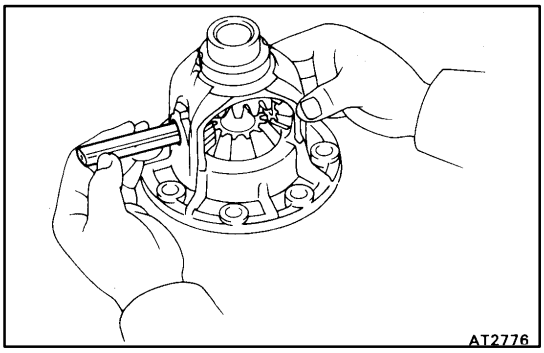

(c) Install the pinion shaft.

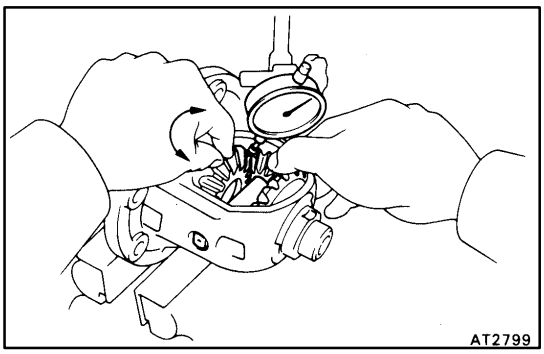

(d) Check the side gear backlash.
Measure the side gear backlash while holding one pinion gear toward the case.
Standard backlash:
0.05 – 0.20 mm (0.0020 – 0.0079 in.)
Referring to the table below, select thrust washers which will ensure that the backlash is within specification. Try to select washers of the same size for both sides.
Thrust washer thickness
mm (in.)

Thickness	Thickness
0.95 (0.0374)	1.10 (0.0433)
1.00 (0.0394)	1.15 (0.0453)
1.05 (0.0413)	1.20 (0.0472)

If the backlash is not within specification, install a thrust washer of a different thickness.

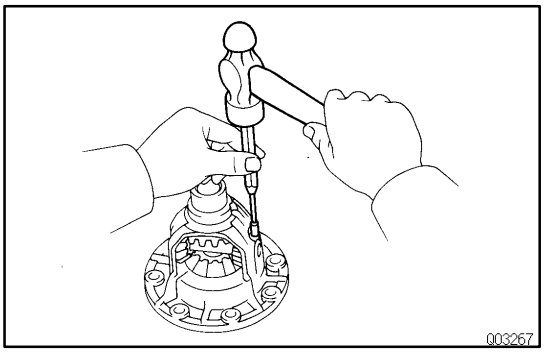

(e) Using a hammer and punch, drive the lock pin through the case and hole in the pinion shaft.

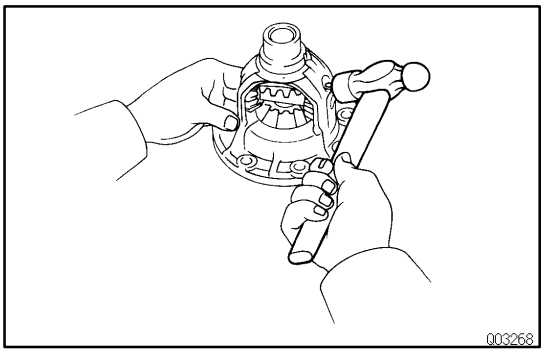

(f) Stake the differential case.

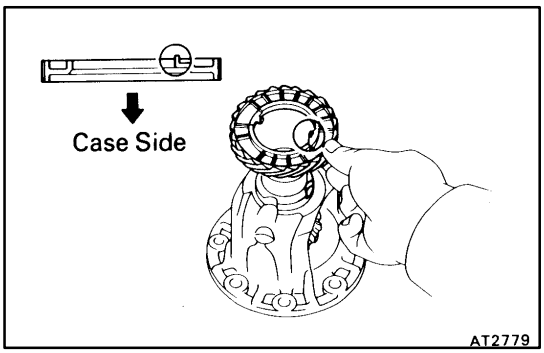

5. INSTALL SIDE BEARINGS

(a) Install the speedometer drive gear onto the differential case.

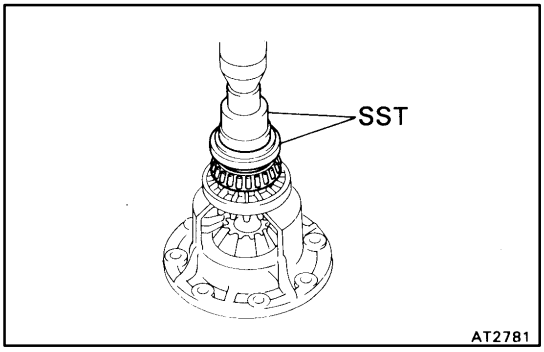

(b) Using SST and a press, press in the RH side bearing onto the differential case.
SST 09350–32014 (09351–32090, 09351–32120)

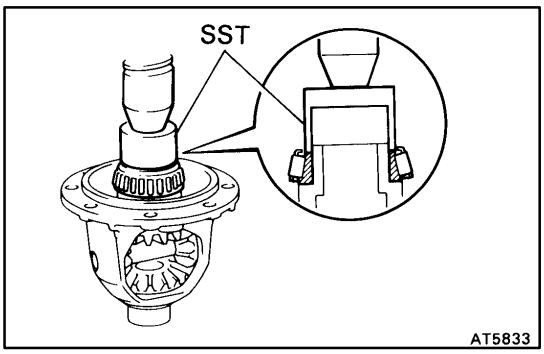

(c) Using SST and a press, press in the LH side bearing onto the differential case.
SST 09710–28020 (09710–08040)

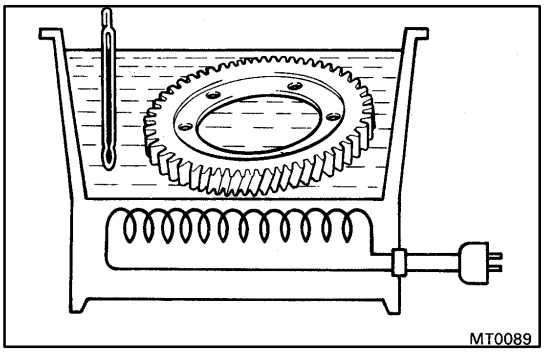

6. INSTALL RING GEAR

(a) Clean the contact surface of the differential case.
(b) Heat the ring gear to about 100 °C (212 °F) in an oil bath.
(c) Carefully remove the ring gear from the water.
NOTICE: Do not heat the ring gear above 110 °C (230 °F).
(d) Clean the contact surface of the ring gear with cleaning solvent.

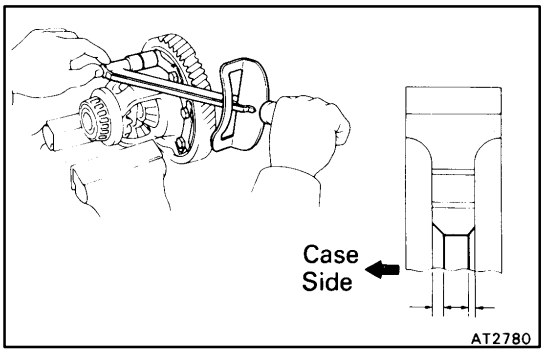

(e) Quickly install the ring gear on the differential case.
(f) Install new locking plates and set bolts. When the ring gear has cooled sufficiently, tighten the set bolts uniformly a little at a time. Torque the bolts.
Torque: 97 N·m (985 kgf·cm, 71 ft·lbf)

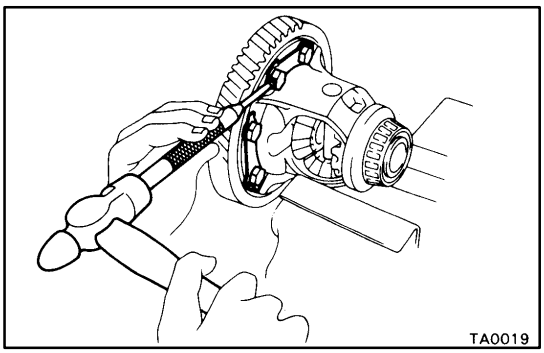

(g) Using a hammer and drift punch, stake the locking plates.
HINT: Stake one claw flush with the flat surface of the nut. For the claw contacting the protruding portion of the nut, stake only the half on the tightening side.

AX0GJ–02

DRIVE PINION DISASSEMBLY

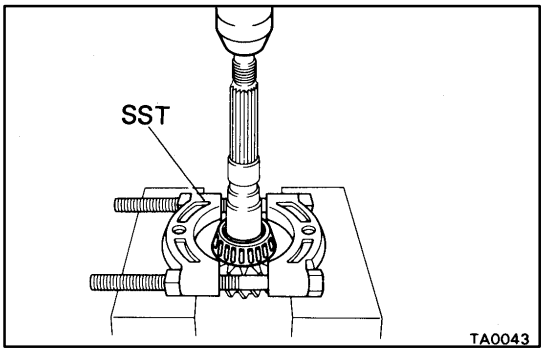

1. REMOVE DRIVE PINION SHAFT BEARING

Using SST, press out the bearing.
SST 09950–00020

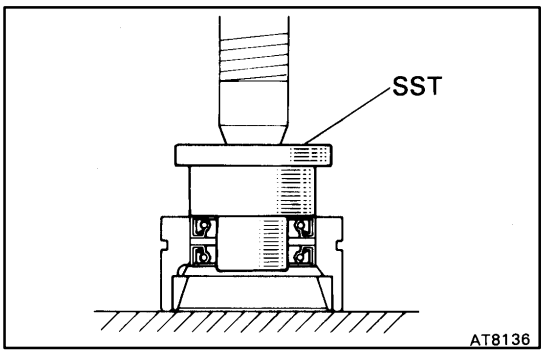

2. REMOVE OIL SEALS FROM CAGE

Using SST, press out the two oil seals together.
SST 09350–32014 (09351–32090)

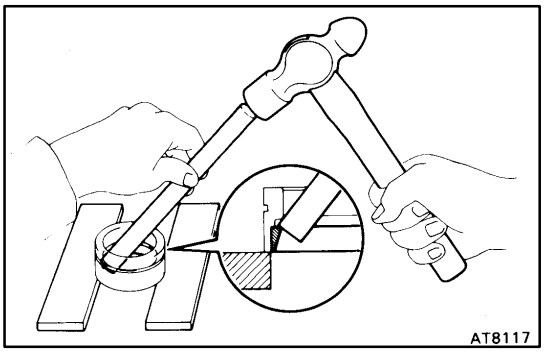

3. REMOVE SHAFT BEARING OUTER RACE FROM CAGE

Using a hammer and brass bar, drive out the outer race from the cage.

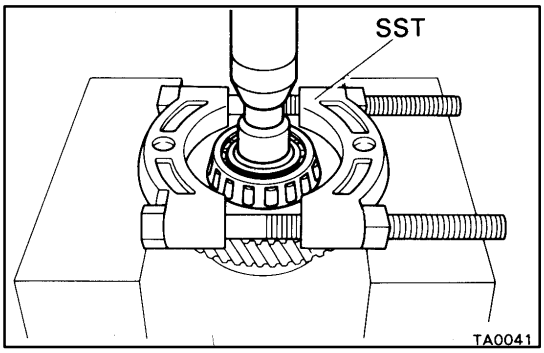

4. REMOVE COUNTER DRIVEN GEAR BEARING

Using SST, press out the bearing.
SST 09950–00020

AX0GK–02

DRIVE PINION SHAFT ASSEMBLY

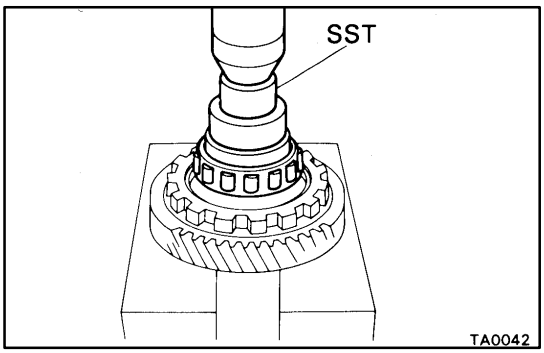

1. INSTALL COUNTER DRIVEN GEAR BEARING

Using SST, press in a new bearing.
SST 09350–32014 (09351–32090)

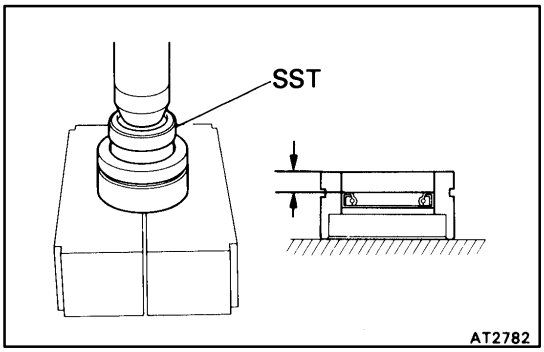

2. INSTALL OIL SEALS TO CAGE

(a) Using SST, press in a new oil seal with the lip facing downward.
SST 09350–32014 (09351–32090)
Oil seal press in depth (from flat end):
9.5 mm (0.374 in.)

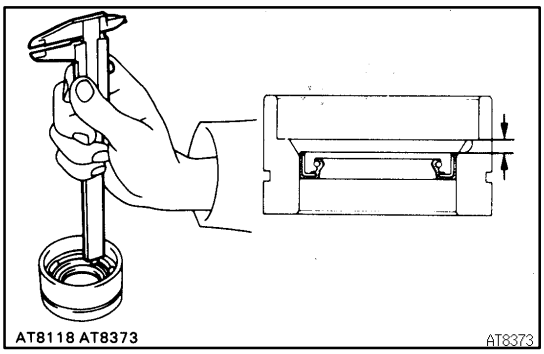

(b) Measure the oil seal press in depth.
Oil seal press in depth:
4 mm (0.16 in.)

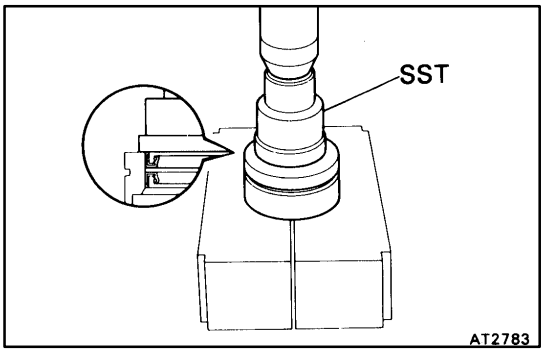

(c) With the oil seal lip facing upward, use SST to press in a new oil seal until its end is flush with the surface of the cage.
SST 09350–32014 (09351–32090)
(d) Coat the oil seal lip with MP grease.

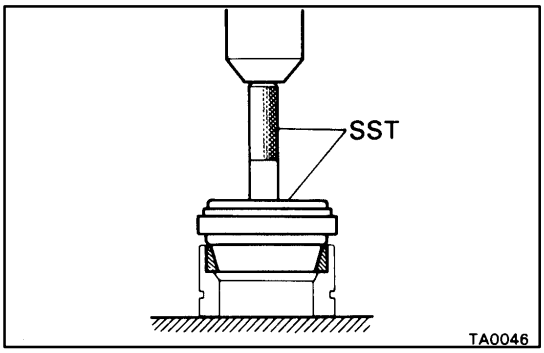

3. INSTALL SHAFT BEARING OUTER RACE TO CAGE
Using SST, press a new outer race into the cage.
SST 09350–32014 (09351–32111, 09351–32130)

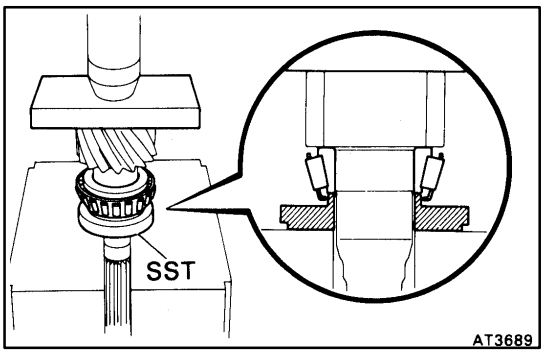

4. INSTALL DRIVE PINION SHAFT BEARING
Using SST, press in the bearing.
SST 09350–32014 (09351–32100)

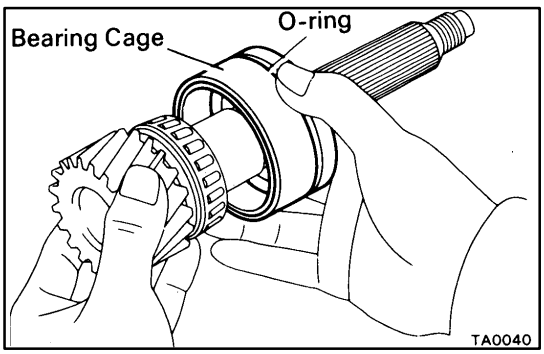

5. PLACE BEARING CAGE ONTO DRIVE PINION SHAFT
Be careful not to damage the oil seal with the splines.

AX0GL–02

DIFFERENTIAL SIDE BEARING PRELOAD ADJUSTMENT

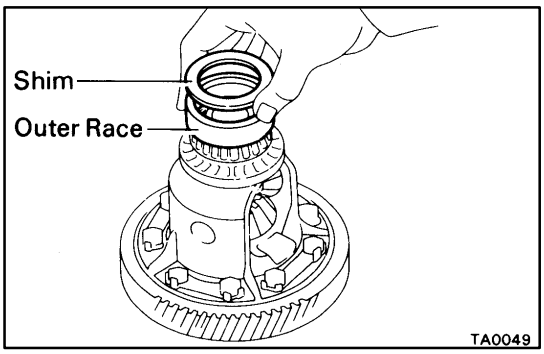

1. PLACE OUTER RACE AND ADJUSTING SHIM ONTO RH SIDE BEARING

Use the adjusting shim which was removed or one 2.40 mm (0.0945 in.) thick.

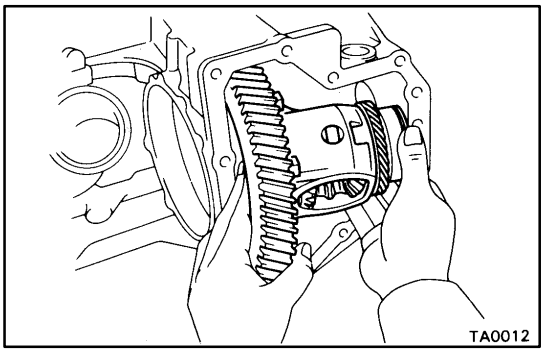

2. PLACE DIFFERENTIAL CASE INTO TRANSAXLE CASE

Be sure to install the adjusting shim.

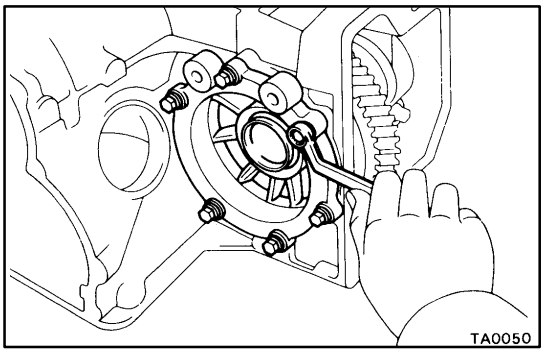

3. INSTALL LH BEARING RETAINER

(a) Do not install the O–ring yet.
(b) Do not coat the bolt threads with sealant yet.
(c) Temporarily tighten the bolts evenly and gradually while turning the ring gear.

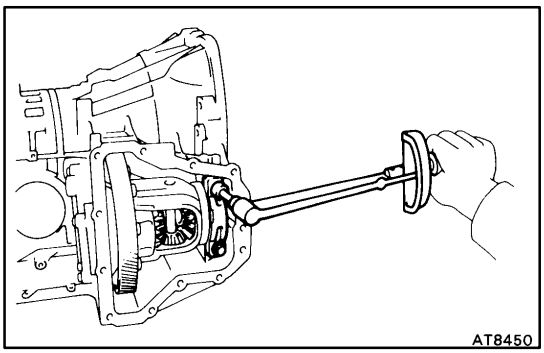

4. INSTALL RH SIDE BEARING CAP

Tighten the bolts evenly and gradually while turning the ring gear.

Torque: 72 N·m (730 kgf·cm, 53 ft·lbf)

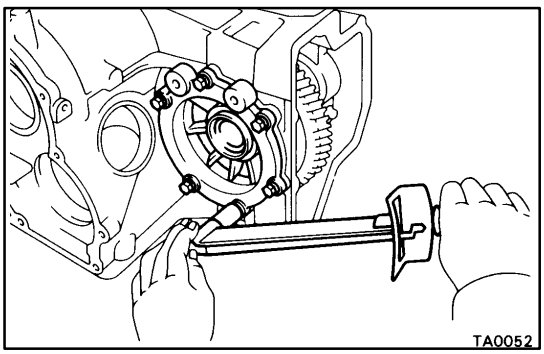

5. TIGHTEN LH BEARING RETAINER

Torque: 19 N·m (195 kgf·cm, 14 ft·lbf)

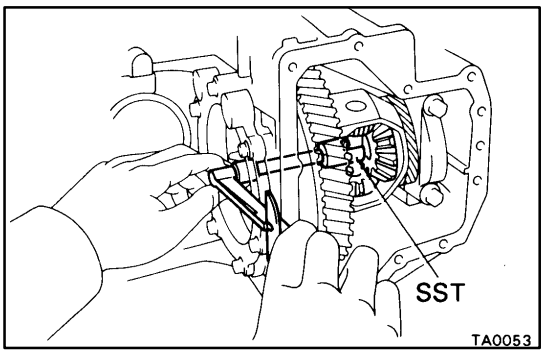

6. ADJUST SIDE BEARING PRELOAD

Using SST and a torque meter, measure the preload of the ring gear.

SST 09564–32011

Preload (at starting):

New bearing

1.0 – 1.6 N·m (10 – 16 kgf·cm, 8.7 – 13.9 in.·lbf)

Reused bearing

0.5 – 0.8 N·m (5 – 8 kgf·cm, 4.3 – 6.9 in.·lbf)

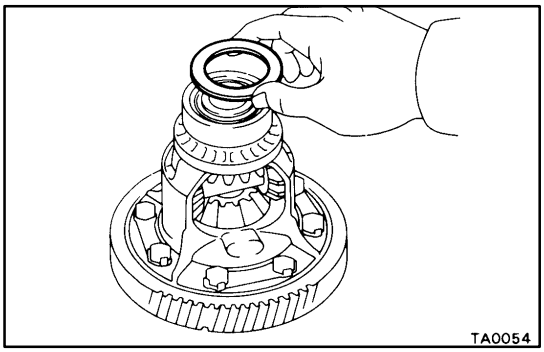

If the preload is not within specification, remove the differential case assembly.

Reselect the RH adjusting shim.

mm (in.)

Thickness	Thickness
1.90 (0.0748)	2.40 (0.0945)
1.95 (0.0786)	2.45 (0.0965)
2.00 (0.0787)	2.50 (0.0984)
2.05 (0.0807)	2.55 (0.1004)
2.10 (0.0827)	2.60 (0.1024)
2.15 (0.0846)	2.65 (0.1043)
2.20 (0.0866)	2.70 (0.1063)
2.25 (0.0886)	2.75 (0.1083)
2.30 (0.0906)	2.80 (0.1103)

HINT: The preload will change by about 0.3 – 0.4 N·m (3 – 4kgf·cm, 2.6 – 3.5 in.·lbf) with a change in shim thickness of 0.05 mm (0.0020 in.).

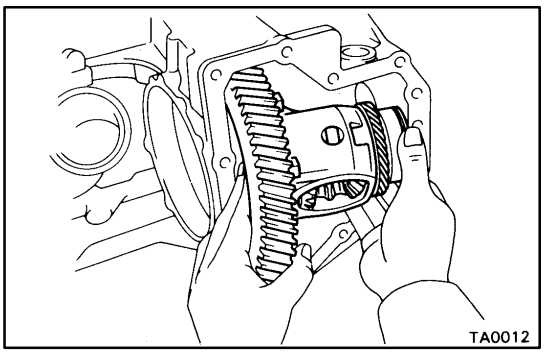

7. REMOVE DIFFERENTIAL CASE AND COMPONENT PARTS

If the preload is adjusted within specification, remove the bearing retainer, differential case, RH side bearing and shim.

Be careful not to lose the adjusting shim.

COMPONENT PARTS INSTALLATION

COMPONENT PARTS INSTALLATION

AX0GW–02

Disassembly, inspection and assembly of each component group have been indicated in the preceding chapter. Before assembly, make sure, again, that all component groups are assembled correctly.
If something wrong is found in a certain component group during assembly, inspect and repair this group immediately.

Recommended ATF:

DEXRON ® @@@@@: [g 2]

GENERAL INSTALLATION NOTES:

1. The automatic transaxle is composed of highly precision–finished parts, necessitating careful inspection before assembly because even a small nick could cause fluid leakage and affect performance.
2. Before assembling new clutch discs, soak them in automatic transaxle fluid for at least 15 minutes.
3. Apply automatic transaxle fluid on the sliding or rotating surfaces of parts before assembly.
4. Use petroleum jelly to keep small parts in their places.
5. Do not use adhesive cements on gaskets and similar parts.
6. When assembling the transaxle, be sure to use new gaskets and O–rings.
7. Dry all parts with compressed air–never use shop rags.
8. Be sure to install the thrust bearings and races in the correct direction and position.

BEARING AND RACE DIAMETERS

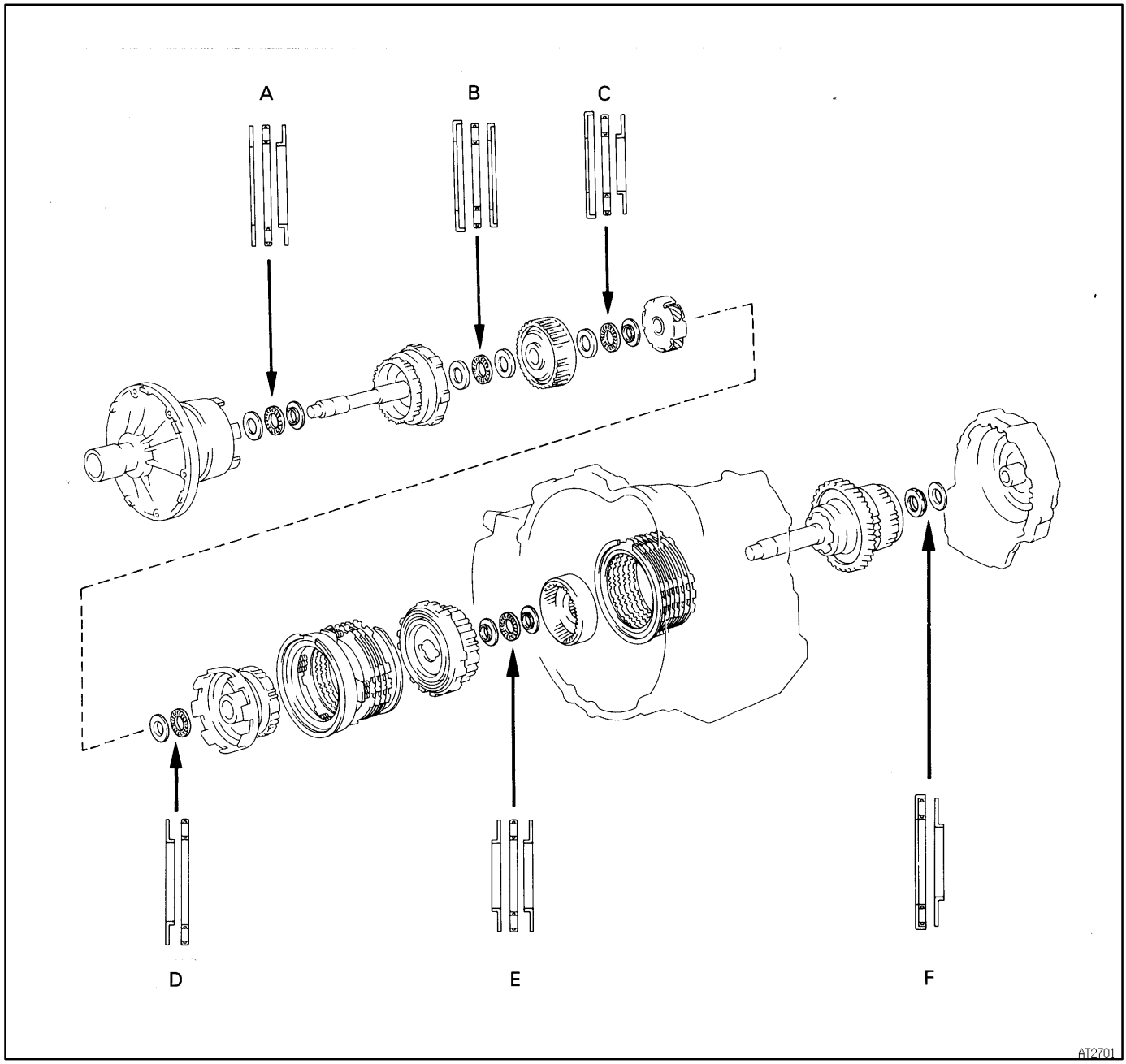

mm (in.)	Front Bearing Race Outer / Inner Diameter	Thrust Bearing Race Outer / Inner Diameter	Rear Bearing Race Outer / Inner Diameter
@@ @@ @: [c A]	43.0 / 30.5 (1.693 / 1.201)	42.0 / 28.9 (1.654 / 1.138)	42.0 / 27.1 (1.654 / 1.067)

@@@@@: [c B]	37.9 / 22.0 (1.492 / 0.866)	36.1 / 22.2 (1.421 / 0.874)	35.7 / 23.0 (1.406 / 0.906)
@@@@@: [c C]	37.9 / 22.0 (1.492 / 0.866)	36.1 / 22.2 (1.421 / 0.874)	35.0 / 19.0 (1.378 / 0.748)
@@@@@: [c D]	45.0 / 28.0 (1.772 / 1.102)	45.0 / 30.0 (1.772 / 1.181)	–
@@@@@: [c E]	37.3 / 24.1 (1.469 / 0.949)	37.6 / 24.0 (1.480 / 0.945)	37.6 / 22.2 (1.480 / 0.874)
@@@@@: [c F]	–	46.3 / 26.2 (1.823 / 1.031)	43.0 / 24.5 (1.693 / 0.965)

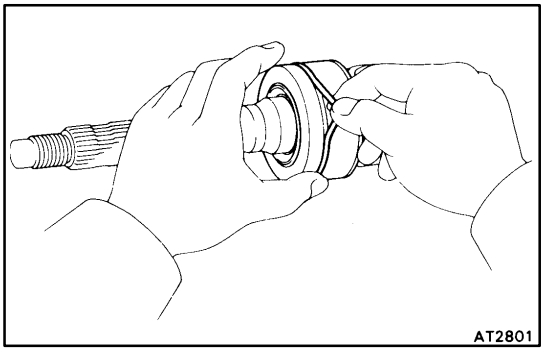

DRIVE PINION ASSEMBLY INSTALLATION AX0GM–02

1. INSTALL NEW O–RING ONTO BEARING CAGE

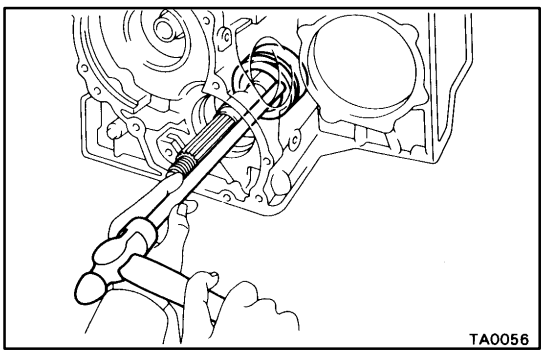

2. INSTALL DRIVE PINION SHAFT INTO CASE

Slightly tap the cage into the case until the groove with the bore can be see.

HINT: Drive in the bearing cage until the surface of the bearing cage passes through the groove with the bore.

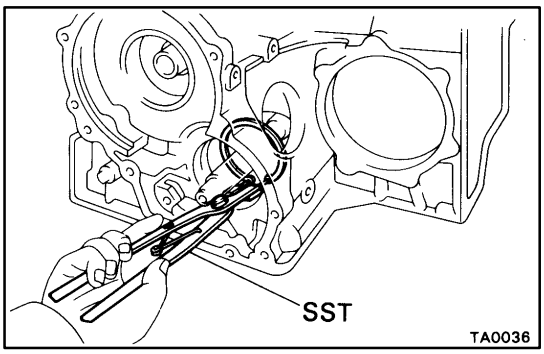

3. INSTALL SNAP RING INTO CASE

(a) Using SST, install the snap ring into the groove.
SST 09350–32014 (09351–32050)

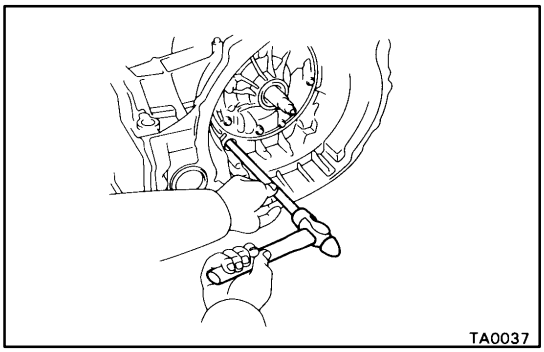

(b) Slightly tap the drive pinion to fit the snap ring into the groove.

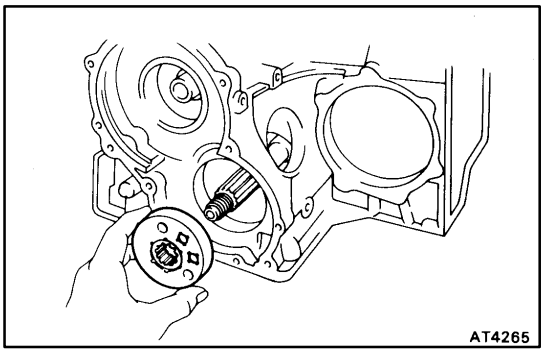

4. INSTALL ROTOR SENSOR

Install the rotor sensor, facing the magnet outward.

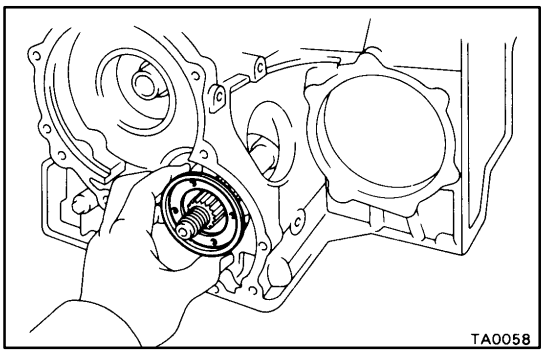

5. INSTALL OIL SLINGER

Install the oil slinger, facing the lip outward.

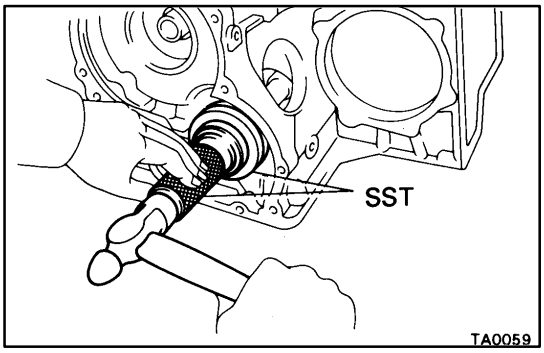

6. INSTALL OUTER RACE

Using SST, drive the outer race into the case.
SST 09350–32014 (09351–32100, 09351–32140)

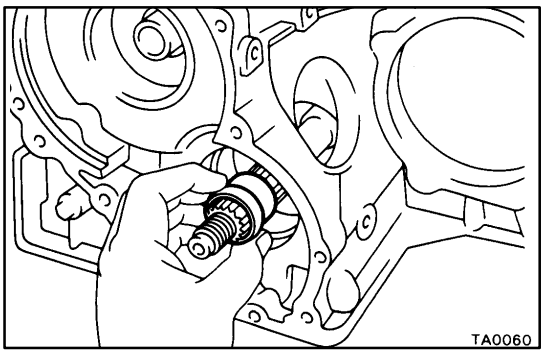

7. INSTALL NEW SPACER

Always use new spacer.

Install the spacer with the small end first.

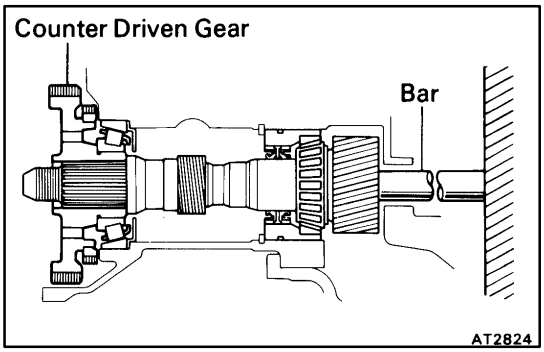

8. INSTALL COUNTER DRIVEN GEAR ONTO SHAFT

(a) Place a bar at the drive pinion side and position the outer end of the bar against a vise or similar.

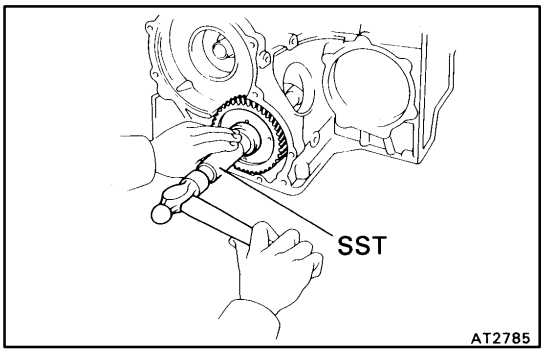

(b) Using SST, driven in gear onto the shaft until the nut can be installed on the threads of the shaft.

NOTICE: Be careful not to cause an impact to the transaxle case.

SST 09350–32014 (09351–32140)

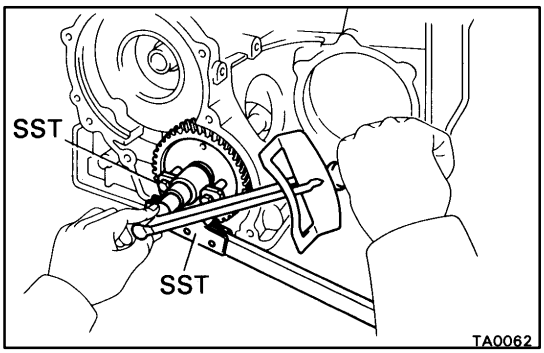

9. ADJUST DRIVE PINION PRELOAD

(a) Coat the threads and surface of the nut with MP grease.

(b) Using SST to hold the gear, tighten the nut.

Torque: 172 N·m (1,750 kgf·cm, 127 ft·lbf)

SST 09330–00021, 09350–32014 (09351–32032)

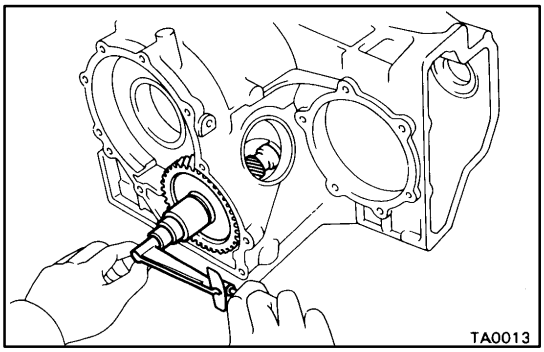

(c) Turn the gear counterclockwise and clockwise several times.

(d) Using a torque meter, measure the preload of the drive pinion.

Preload (at starting):

New bearing

1.0 – 1.6 N·m (10 – 16 kgf·cm, 8.7 – 13.9 in.·lbf)

Reused bearing

0.5 – 0.8 N·m (5 – 8 kgf·cm, 4.3 – 6.9 in.·lbf)

- If the preload is greater than specified, replace the bearing spacer.
- If the preload is less than specified, retighten the nut 13 N·m (130 kgf·cm, 9 ft·lbf) at a time until the specified preload is reached.

If the maximum torque is exceeded while retightening the nut, replace the bearing spacer and repeat the preload procedure.

Do not back off the nut to reduce the preload.

Maximum torque:

289 N·m (2,950 kgf·cm, 213 ft·lbf)

(e) If the preload is adjusted within specification, make a note of it.

AX0SX–01

DIFFERENTIAL INSTALLATION

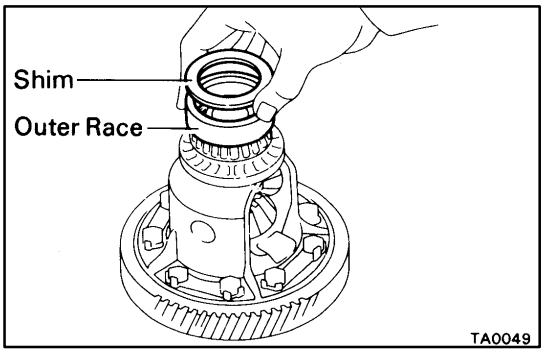

1. PLACE OUTER RACE AND SELECTED ADJUSTING SHIM ONTO RH SIDE BEARING

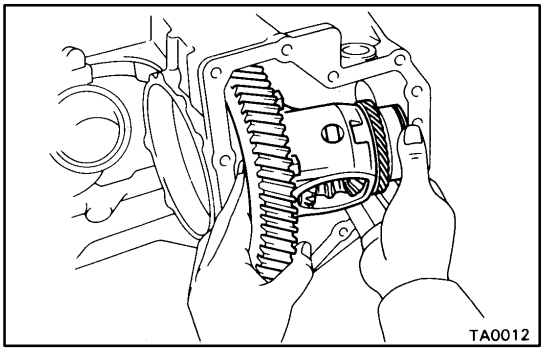

2. PLACE DIFFERENTIAL CASE INTO CASE

Be sure to install the adjusting shim into place.

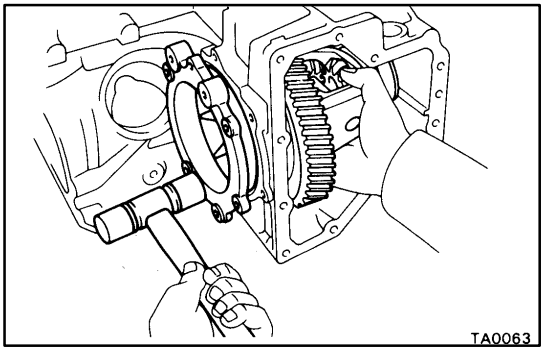

3. INSTALL LH BEARING RETAINER

(a) Install a new O–ring.

(b) Position the retainer by tapping it while holding the differential case center with the retainer.

(c) Clean the threads of the bolts and case with white gasoline.

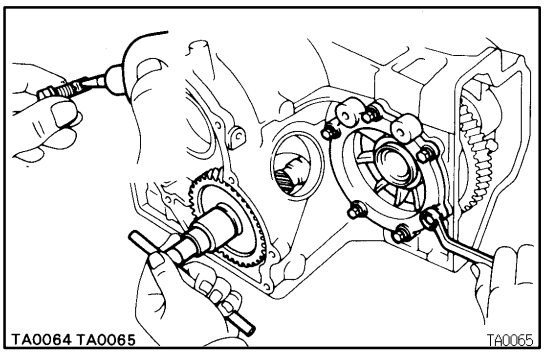

(d) Coat the threads of the bolts with sealer.
Sealer:
Part No.08833–00070, THREE BOND 1324 or equivalent

(e) Temporarily tighten the bolts evenly and gradually while turning the ring gear.

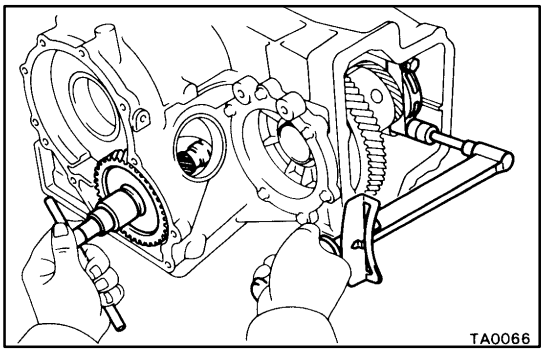

4. INSTALL RH SIDE BEARING CAP
Tighten the bolts evenly and gradually while turning the ring gear.
Torque: 72 N·m (730 kgf·cm, 53 ft·lbf)

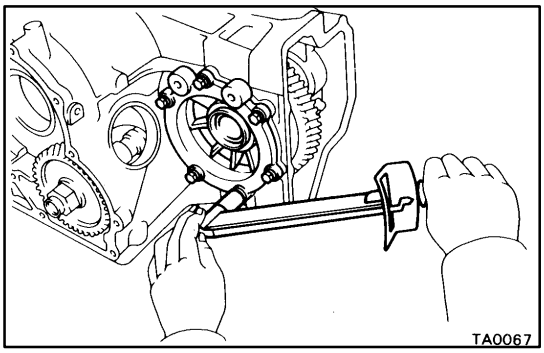

5. TIGHTEN LH BEARING RETAINER
Torque: 19 N·m (195 kgf·cm, 14 ft·lbf)

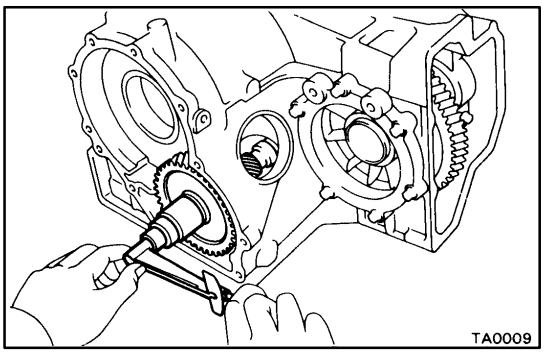

6. MEASURE TOTAL PRELOAD
Using a torque meter, measure the total preload of the drive pinion shaft.
Total preload (at starting):
Add drive pinion preload (See page AX–xx)
New Bearing
0.3 – 0.4 N·m (2.9 – 4.0 kgf·cm, 2.5 – 3.5 in.·lbf)
Reused bearing
0.1 – 0.2 N·m (1.5 – 2.0 kgf·cm, 1.3 – 1.7 in.·lbf)
If the preload is not within specification, redisassemble and readjust.

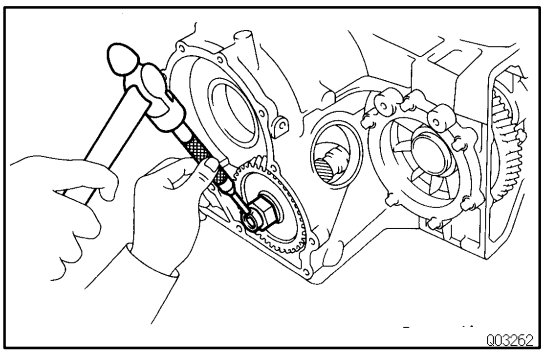

7. STAKE COUNTER DRIVEN GEAR NUT

8. INSTALL DRIVE PINION CAP

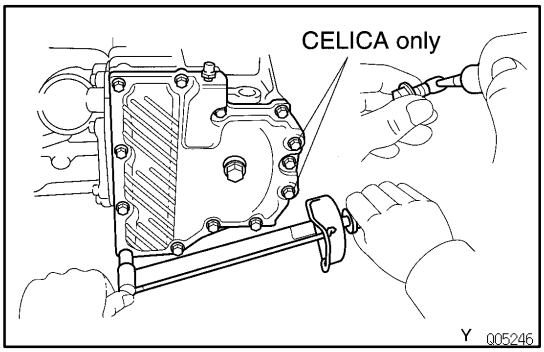

9. INSTALL CARRIER COVER

(a) Clean the threads of the bolts and case with white gasoline.

(b) Coat the threads of the bolts with sealer.
Sealer:
Part No.08833–00070, THREE BOND 1324 or equivalent

(c) Install the carrier cover over the gasket.
Torque: 25 N·m (250 kgf·cm, 18 ft·lbf)

AX0SY–01

4–SPEED GEAR UNIT INSTALLATION

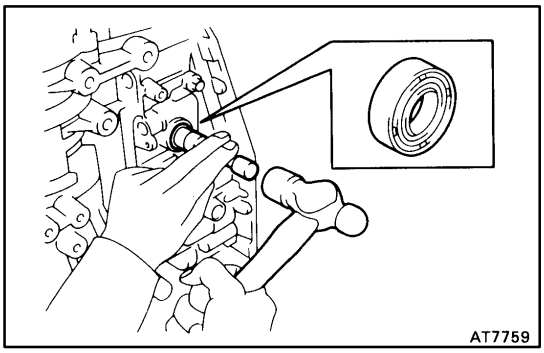

1. INSTALL MANUAL VALVE SHAFT

(a) Coat the oil seal lip with MP grease.

(b) Using a socket wrench and hammer, drive in a new manual valve shaft oil seal to the case.

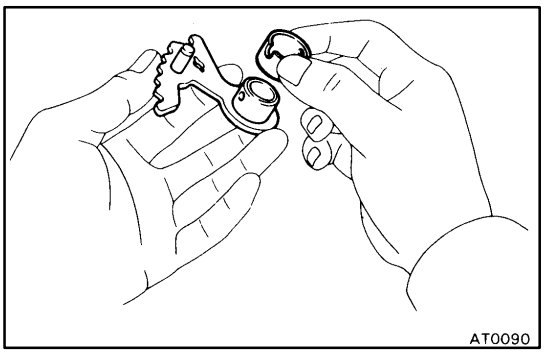

(c) Assemble a new collar to the manual valve lever.

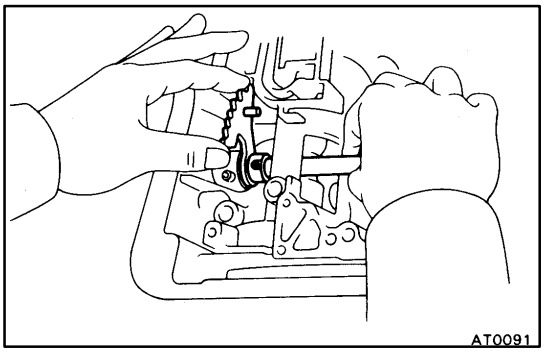

(d) Install the manual valve lever shaft to the transaxle case through the manual valve lever.

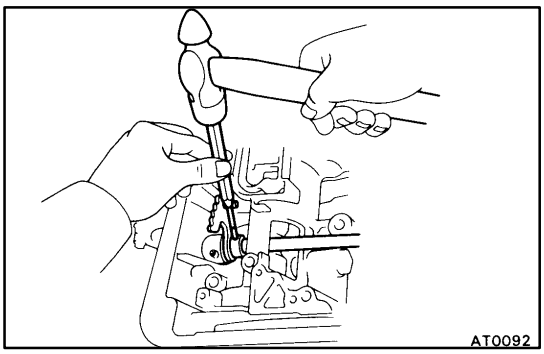

(e) Using a pin punch, drive in the roll pin until its surface is flush with the manual valve lever surface.

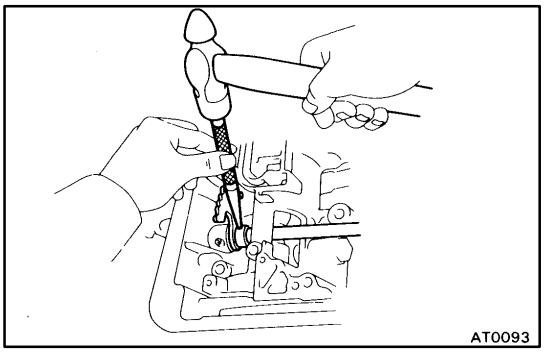

(f) Match the collar hole to the lever calking hollow and calk the collar to the lever.

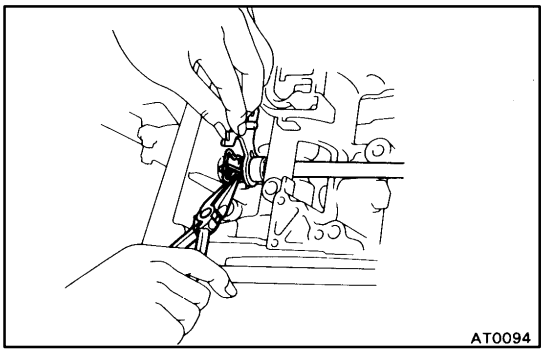

(g) Install the retaining spring.

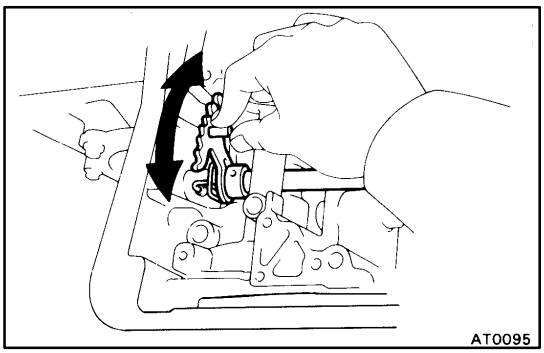

(h) Make sure that the lever moves smoothly.

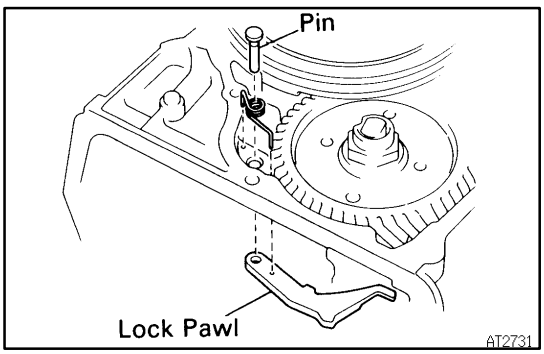

2. INSTALL PARKING LOCK PAWL

(a) Place the parking lock pawl onto the case. Hook the spring ends to the case and pawl.

(b) Install the pin into the hole of the case through the spring and pawl.

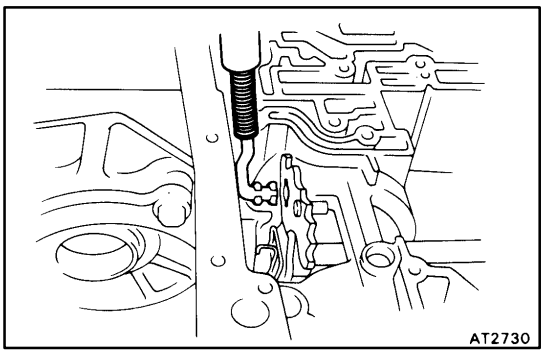

3. INSTALL PARKING LOCK ROD

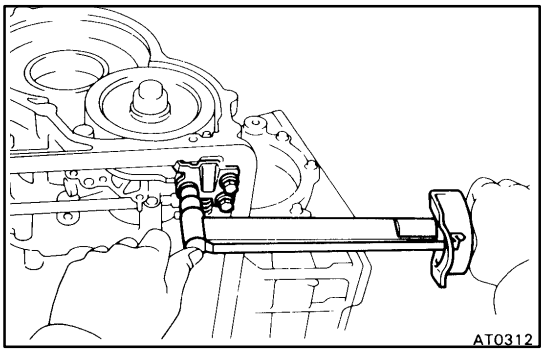

4. INSTALL PARKING LOCK PAWL BRACKET
Torque: 7.4 N·m (75 kgf·cm, 65 in.·lbf)

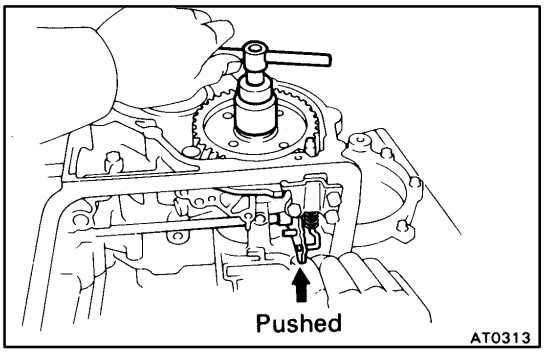

5. CHECK OPERATION OF PARKING LOCK PAWL
Make sure the counter driven gear is locked when the manual valve lever is in the P position.

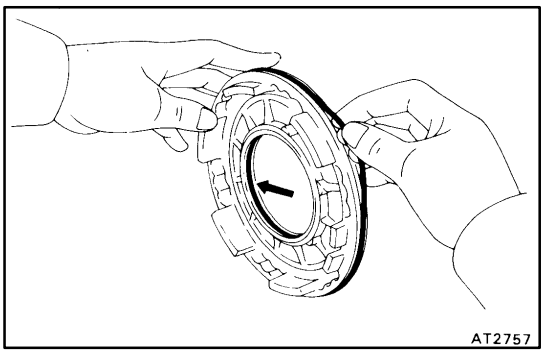

6. INSTALL FIRST AND REVERSE BRAKE PISTON TO TRANSMISSION CASE

(a) Coat a new O–rings with ATF.

(b) Install the 2 O–rings on the piston.

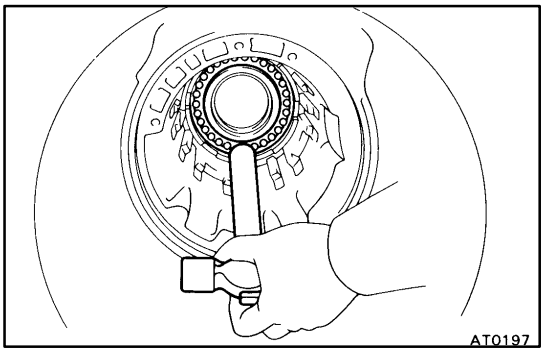

(c) Push the piston into the bore of the case, facing the spring seat upward.

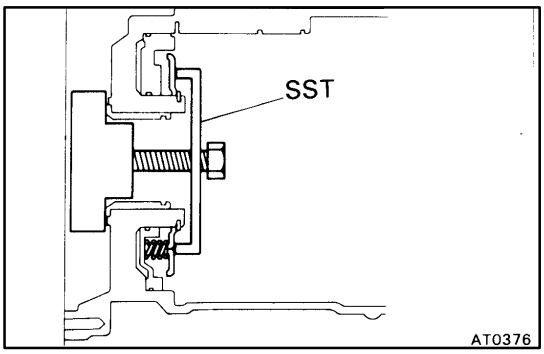

7. INSTALL PISTON RETURN SPRING

(a) Place the return spring and snap ring on the piston.

(b) Place SST, and compress the return spring evenly by tightening the bolt gradually.
SST 09350–32014 (09351–32040)

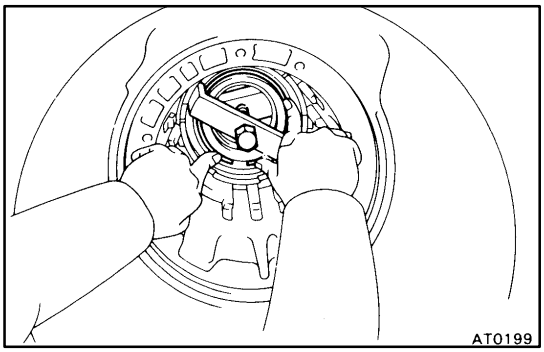

(c) Install snap ring. Visually check to make sure it is fully seated and centered by the 3 lugs on the spring retainer. Be sure the end gap of snap ring is not aligned with the spring retainer claw.

(d) Remove SST.

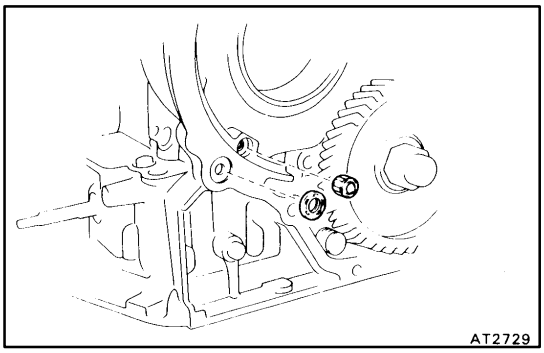

8. INSTALL OVERDRIVE UNIT

(a) Install the overdrive brake apply gasket and overdrive clutch apply gasket.

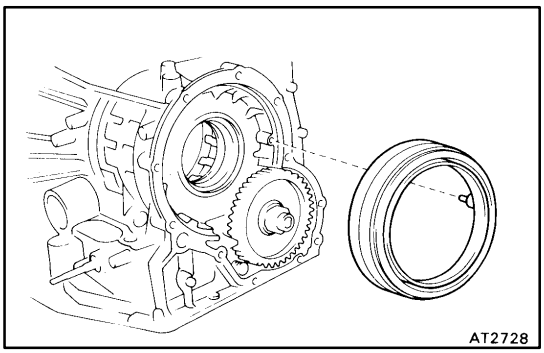

(b) Install the overdrive brake drum to the case.

(c) Install a new case gasket to the case.

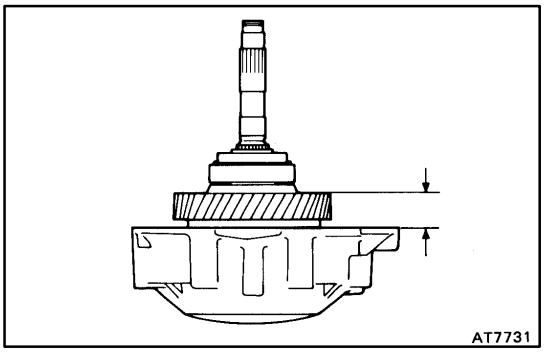

(d) Make sure that the length from the top surface of the case to the counter driven gear top surface should be about 24 mm (0.94 in.).

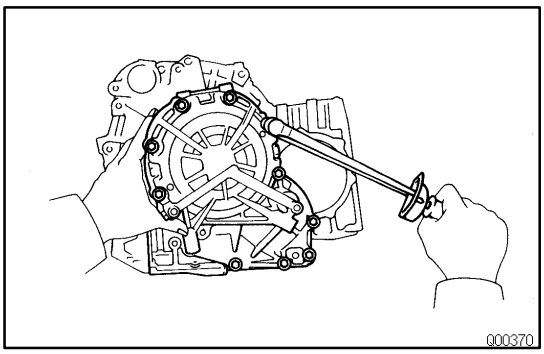

(e) Install the overdrive unit with overdrive case to the transaxle case.
(f) Install and tighten the bolts.
Torque: 25 N·m (250 kgf·cm, 18 ft·lbf)

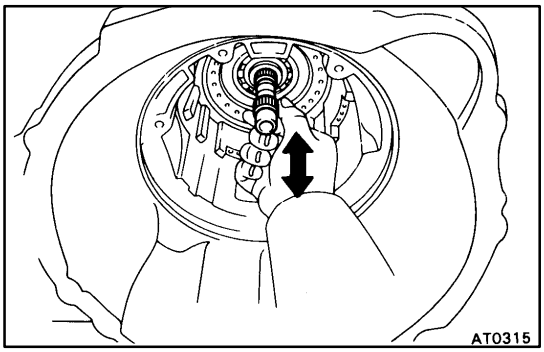

9. CHECK INTERMEDIATE SHAFT END PLAY
(a) Make sure that the intermediate shaft has thrust play.
Thrust play:
0.49 – 1.51 mm (0.0193 – 0.0594 in.)
If the thrust play is not within specification, check the installation of intermediate shaft.
(b) Make sure that the intermediate shaft turns smoothly.

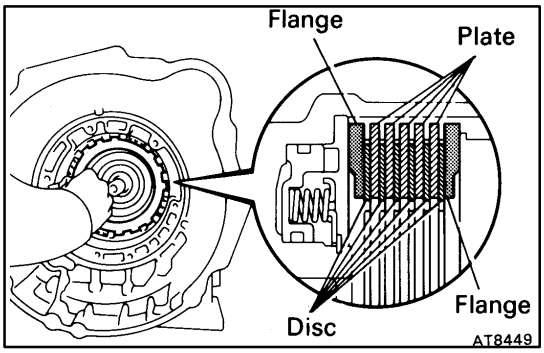

10. INSTALL FIRST AND REVERSE BRAKE IN CASE
(a) Install the inner flange facing the flat end toward the oil pump side.
(b) Install the discs and plates.
Install in order: P=Plate D=Disc
D – P – D – P – D – P – D – P – D – P – D
(c) Install the outer flange, facing the flat end toward the piston side.

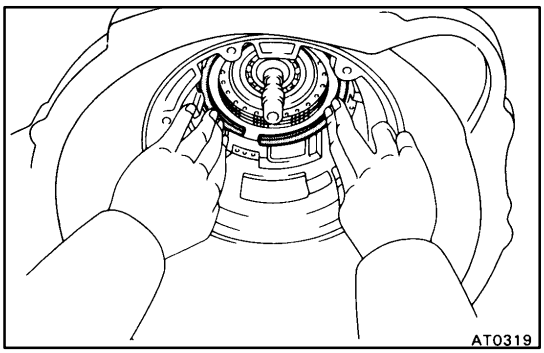

11. INSTALL SNAP RING
Be sure the end gap of the snap ring is not aligned with one of the cutouts.

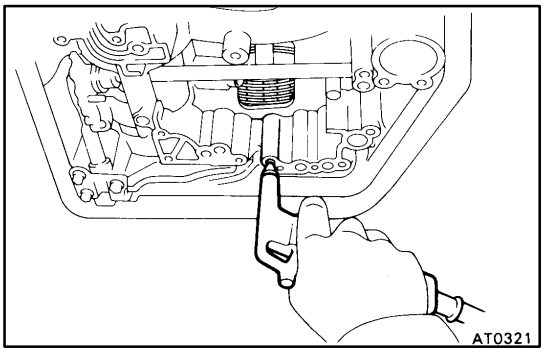

12. CHECK OPERATION OF FIRST AND REVERSE BRAKE
Apply compressed air into the oil passage with the case and be sure that the piston moves.

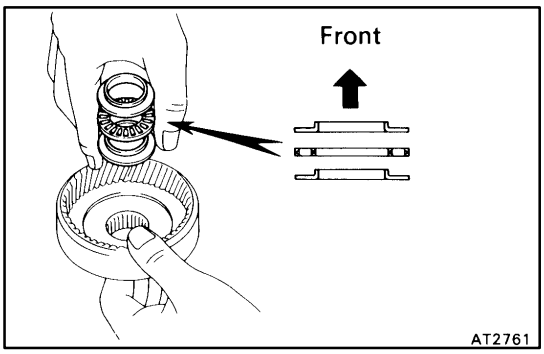

13. INSTALL RING GEAR INTO CASE

(a) Coat the races and bearing with petroleum jelly and install them onto the ring gear.

Bearing and races

mm (in.)

	Outer Diameter	Inner Diameter
Front Race	37.3 (1.469)	24.1 (0.949)
Bearing	37.6 (1.480)	24.0 (0.945)
Rear Race	37.6 (1.480)	22.2 (0.874)

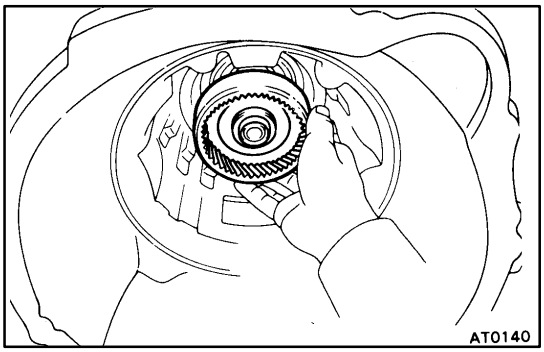

(b) Install the ring gear into the case.

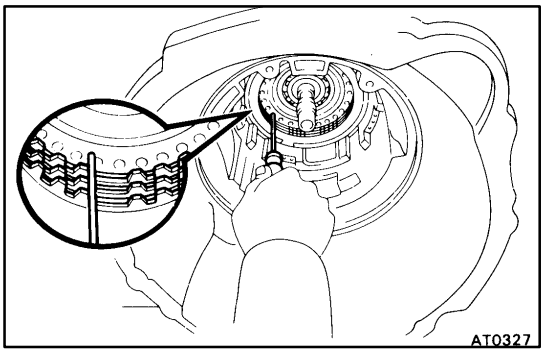

14. INSTALL REAR PLANETARY GEAR INTO CASE

(a) Align the flukes of the discs in the first and reverse brake.

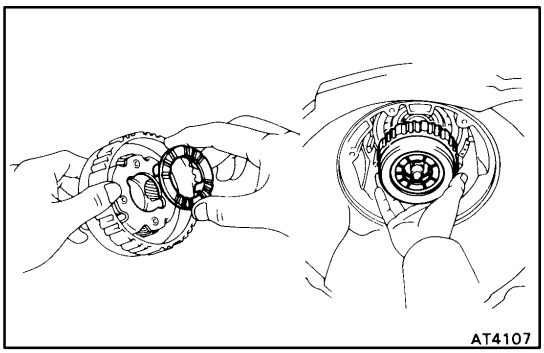

(b) Coat the thrust washer with petroleum jelly.
Align the tab of the washer with the hollow of the carrier.

(c) Align the spline of the planetary carrier with either of the flukes of the discs, and install the planetary gear into the first and reverse brake discs.

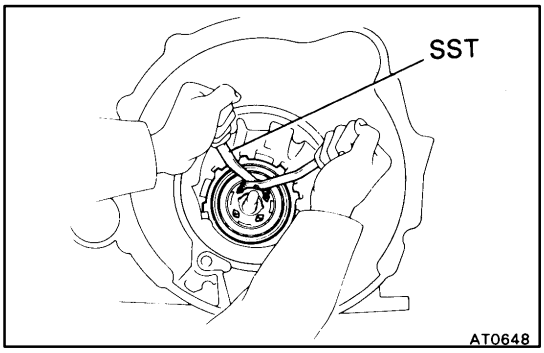

15. INSTALL NO.2 ONE–WAY CLUTCH INTO CASE WITH SHINY SIDE UPWARD

(a) Place the one–way clutch with the shiny side upward.

(b) Install the one–way clutch onto the inner race while turning the planetary gear clockwise with SST.
SST 09350–32014 (09351–32050)

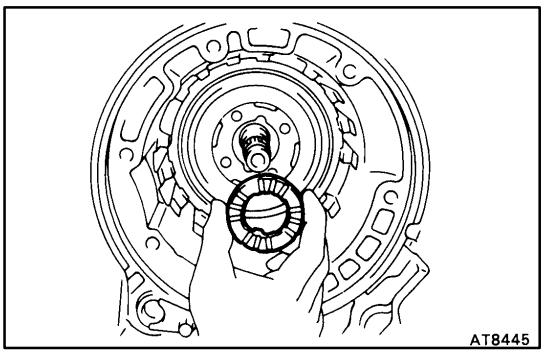

(c) Coat the thrust washer with petroleum jelly and install it onto the planetary gear.

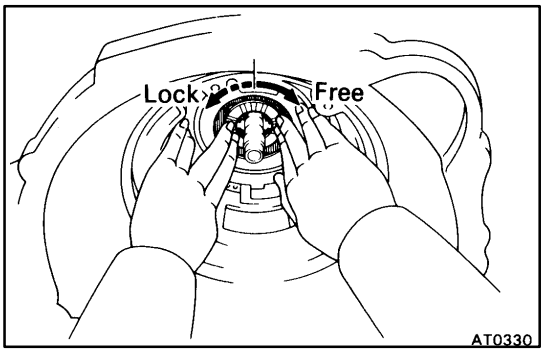

16. CHECK OPERATION OF NO.2 ONE–WAY CLUTCH

Turn the planetary carrier. The carrier should turn freely clockwise and lock counterclockwise.

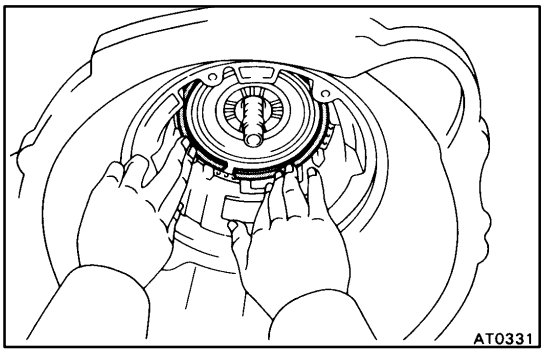

17. INSTALL SNAP RING

Be sure the end gap of the snap ring is not aligned with one of cutouts.

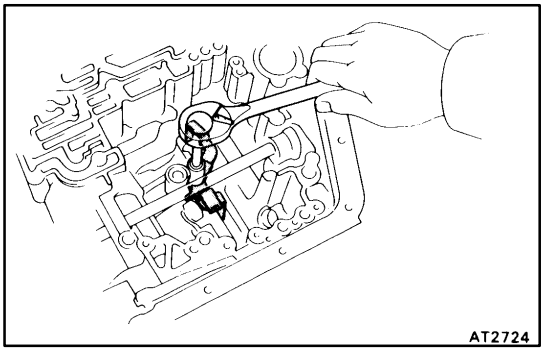

18. INSTALL SECOND COAST BRAKE BAND GUIDE

Install the 2 band guides so that its tip touches the case.

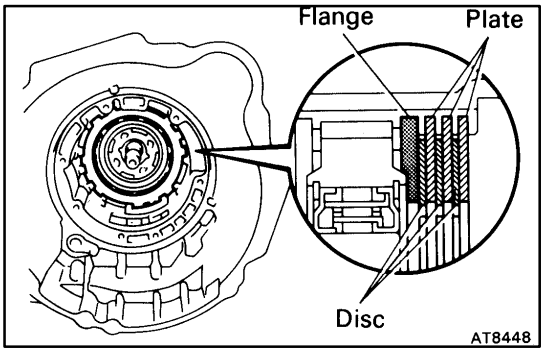

19. INSTALL SECOND BRAKE INTO CASE

(a) Install the flange, facing the flat end toward the oil pump side.

(b) Install the discs and plates.
Install in order: P=Plate D=Disc
Flange – D – P – D – P – D – P

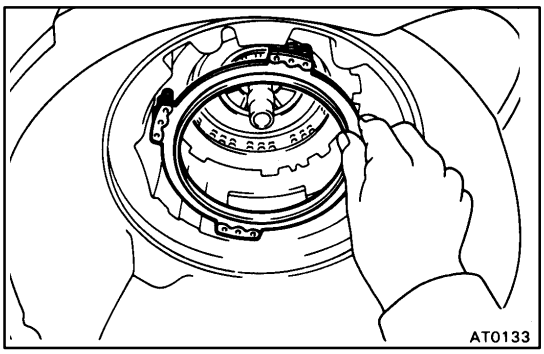

20. INSTALL PISTON RETURN SPRING

Each spring end is installed onto the protrusion with the case.

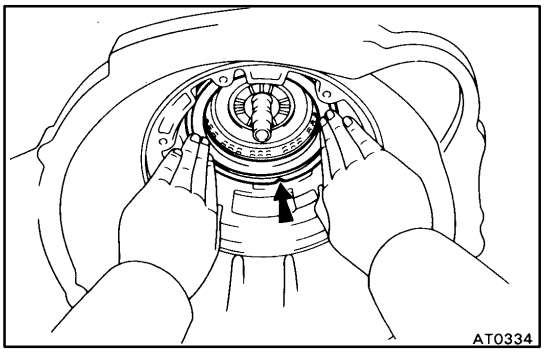

21. INSTALL SECOND BRAKE DRUM INTO CASE

Align the groove of the drum with the bolt and place it into the case.

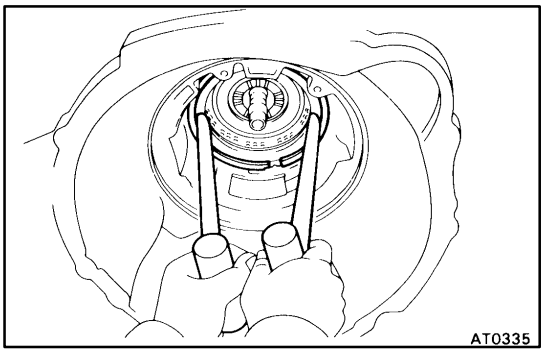

22. INSTALL SNAP RING

(a) Place the snap ring into the case so that the end gap is installed into the groove.

(b) While compressing the piston return springs over the drum with hammer handles, install the snap ring into the groove.

(c) Be sure the end gap of the snap ring is not aligned with one of the cutouts.

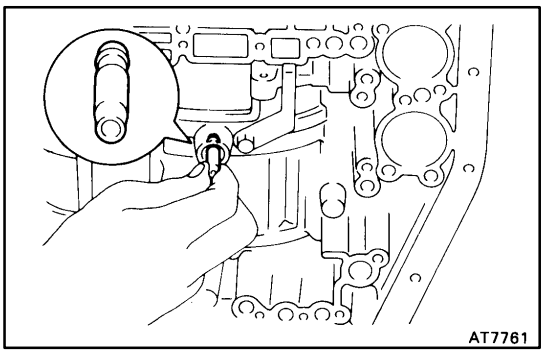

23. INSTALL SECOND BRAKE DRUM GASKET

Install a new gasket until it makes contact with the second brake drum.

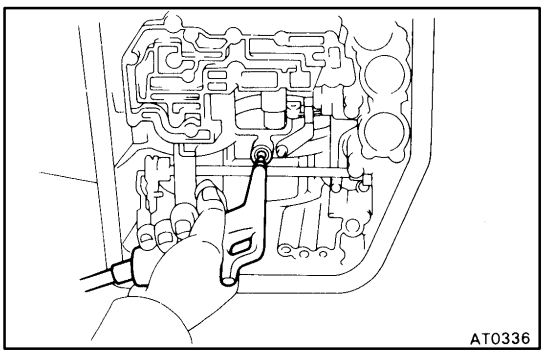

24. CHECK OPERATION OF SECOND BRAKE

Blow compressed air into the oil passage with the case, and be sure that the piston moves.

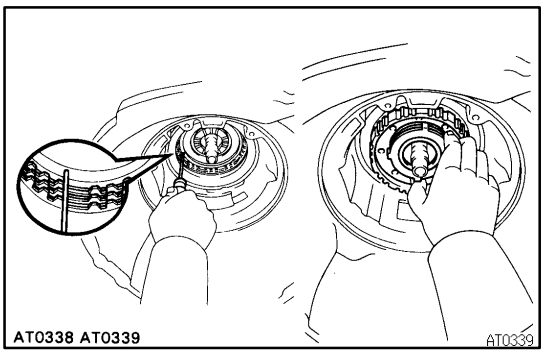

25. INSTALL NO.1 ONE–WAY CLUTCH AND SECOND BRAKE HUB

(a) Align the flukes of the discs in the second brake.

(b) Align the spline of the hub with the flukes of the discs and install the hub to the second brake discs.

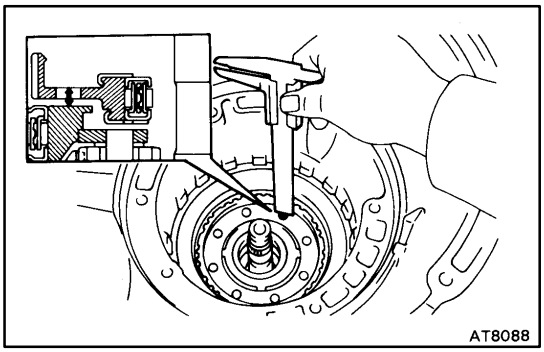

(c) Check the distance between the surfaces of the second brake hub and rear planetary gear.

Distance:

Approx. 5 mm (0.20 in.)

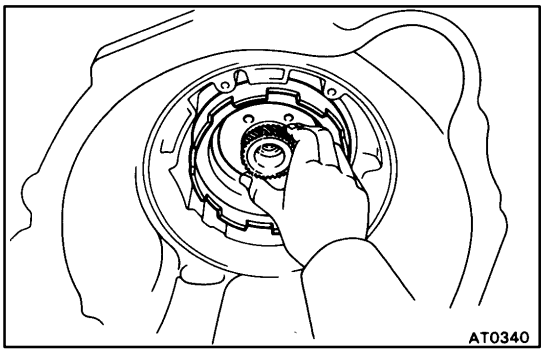

26. INSTALL SUN GEAR AND SUN GEAR INPUT DRUM

While turning the sun gear clockwise, install it into the one–way clutch.

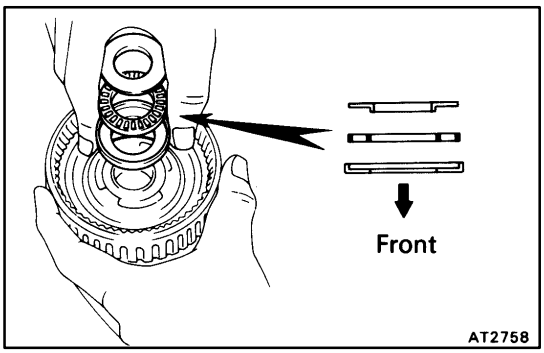

27. INSTALL FRONT PLANETARY GEAR ONTO RING GEAR

(a) Coat the races and bearing with petroleum jelly, and install them onto the ring gear.

Bearing and race

mm (in.)

	Outer Diameter	Inner Diameter
Front Race	37.9 (1.492)	22.0 (0.866)
Bearing	36.1 (1.421)	22.2 (0.874)
Rear Bearing	35.0 (1.378)	19.0 (1.102)

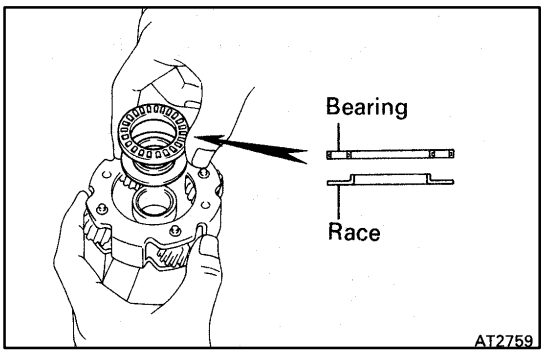

(b) Coat the race and bearing with petroleum jelly, and install them onto the planetary gear.
Bearing and race
mm (in.)

	Outer Diameter	Inner Diameter
Bearing	45.0 (1.772)	30.0 (1.181)
Race	45.0 (1.772)	28.0 (1.102)

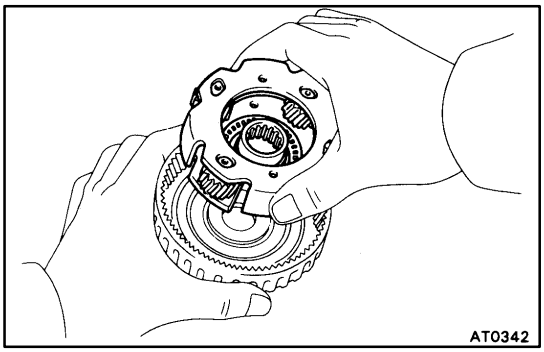

(c) Install the planetary gear onto the ring gear.

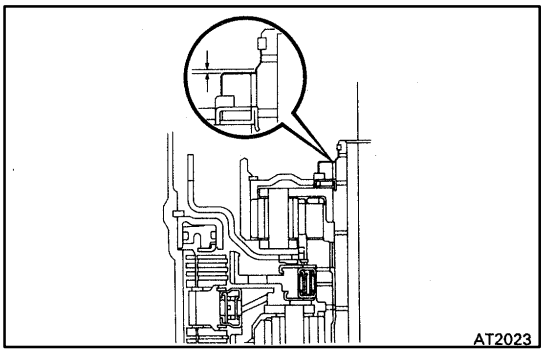

28. INSTALL FRONT PLANETARY GEAR ASSEMBLY ONTO SUN GEAR

(a) If the planetary gear and other parts are installed correctly into the case, the end of the bushing with the ring gear flange will be flush with a shoulder of the intermediate shaft or under.

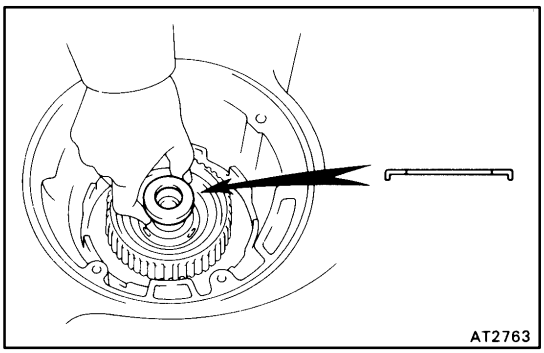

(b) Coat the race with petroleum jelly and install it onto the tip of ring gear flange.
Race:
Outer diameter
35.7 mm (1.406 in.)
Inner diameter
23.0 mm (0.906 in.)

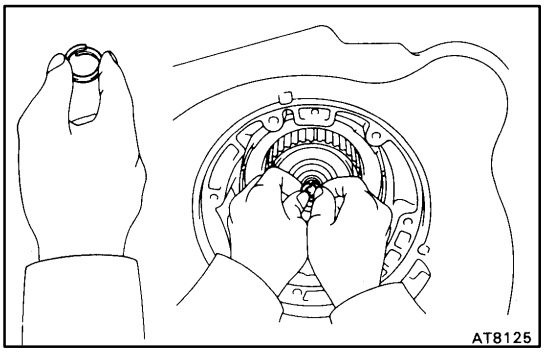

29. INSTALL INTERMEDIATE SHAFT OIL SEAL RING

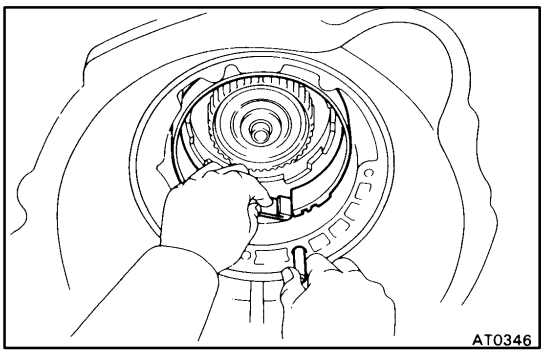

30. INSTALL SECOND COAST BRAKE BAND

(a) Place the band into the case.

(b) Install the pin through the oil pump mounting bolt hole.

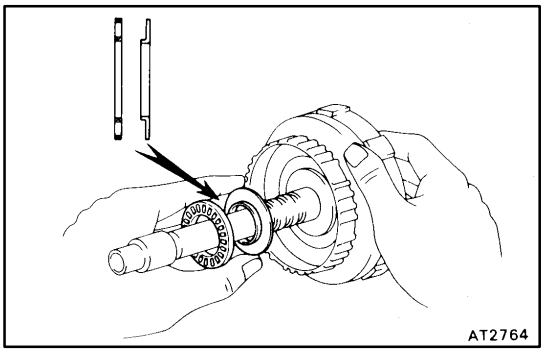

31. INSTALL FORWARD CLUTCH AND DIRECT CLUTCH

(a) Coat the races and bearing with petroleum jelly, and install them onto both sides of the clutch drum.

Bearing and race (Front side)

mm (in.)

	Outer Diameter	Inner Diameter
Bearing	42.0 (1.645)	28.9 (1.138)
Race	42.0 (1.654)	27.1 (1.067)

AT2765:Bearing and race (Rear side)

mm (in.)

	Outer Diameter	Inner Diameter
Bearing	36.1 (1.421)	22.2 (0.874)
Race	37.9 (1.492)	22.0 (0.866)

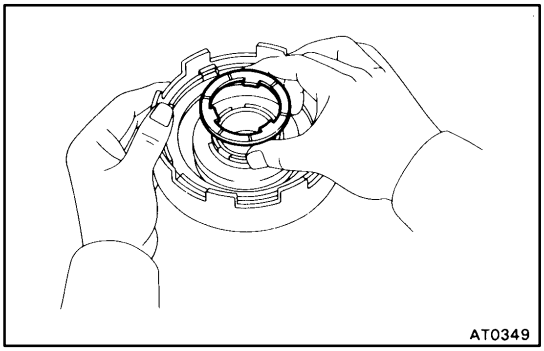

(b) Coat the clutch drum thrust washer with petroleum jelly and install it with the oil groove facing upward onto the direct clutch drum.

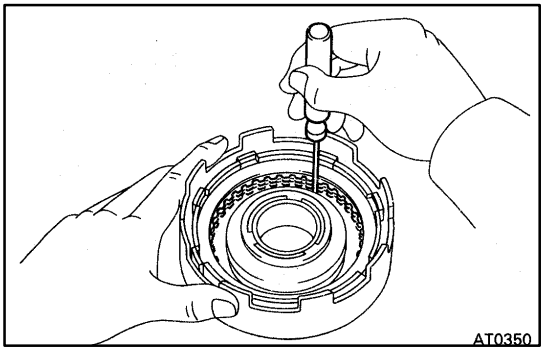

(c) Align the flukes of discs in the direct clutch.

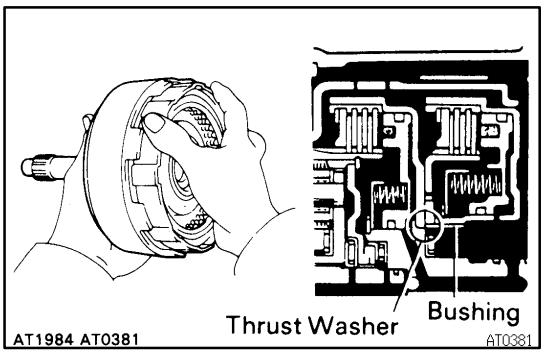

(d) Mesh the hub with the flukes of the direct clutch while turning the clutch drum or forward clutch.
(e) If the flukes of the discs are meshed with the hub correctly, the end of the bushing with the direct clutch drum will be flush with the surface of the forward clutch.

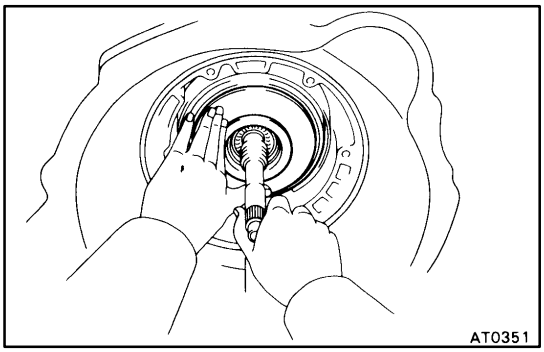

(f) Place the direct clutch and forward clutch into the case.
(g) Rotate the forward clutch to mesh the front planetary ring gear and discs.

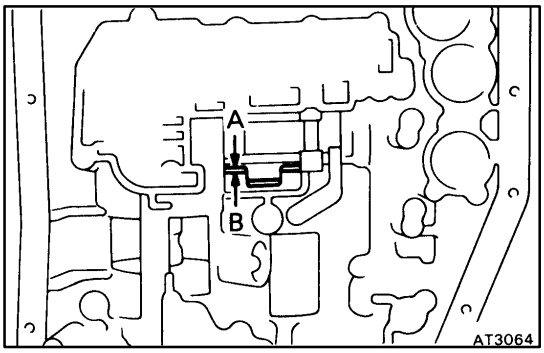

(h) Check the distance between the A and B.
Distance:
Approx. 3 mm (0.118 in.)

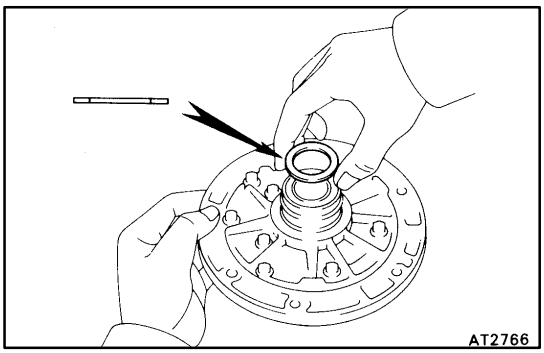

32. INSTALL OIL PUMP INTO CASE
(a) Coat the race with petroleum jelly and install it onto stator shaft.

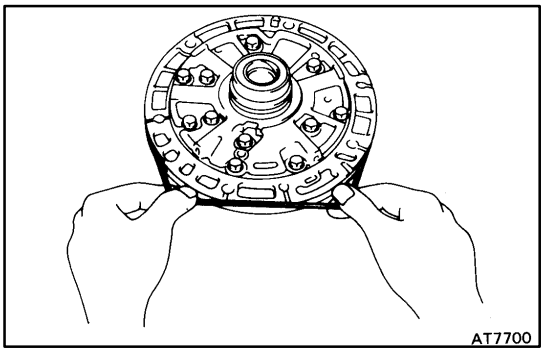

(b) Coat a new O–ring with ATF and install it to oil pump.

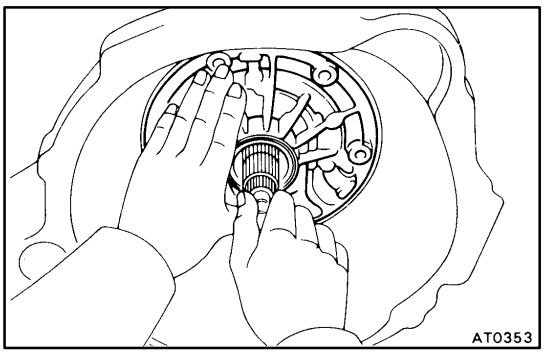

(c) Place the oil pump through the input shaft, and align the bolt holes of the pump body with the transaxle case.

(d) Hold the input shaft, and lightly press the oil pump body to slide the oil seal rings on the stator shaft through the direct clutch drum.

NOTICE: Do not push on the oil pump strongly or the oil seal ring will stick to the direct clutch drum.

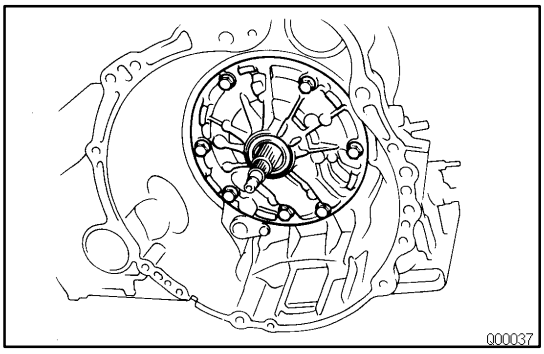

(e) Install tighten the 7 bolts.

Torque: 22 N·m (225 kgf·cm, 16 ft·lbf)

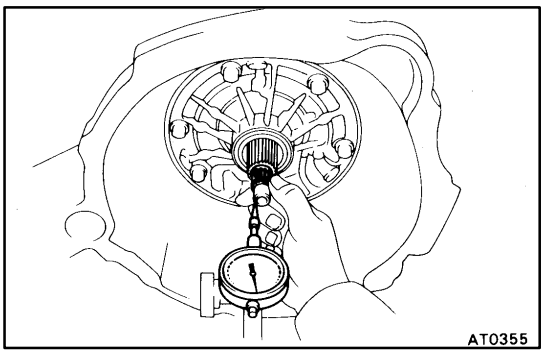

33. MEASURE THRUST PLAY OF INPUT SHAFT

Measure the thrust play with a dial gauge.

Thrust play:

0.3 – 0.9 mm (0.012 – 0.035 in.)

HINT: There are 2 thickness of races for the end of stator shaft.

If the thrust play is in excess of standard, select one of them.

Race thicknesses:

0.8 mm (0.031 in.)

1.4 mm (0.055 in.)

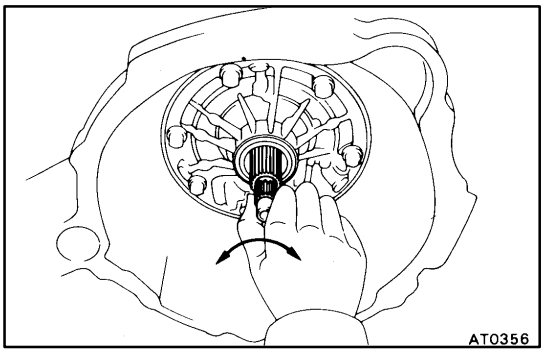

34. CHECK INPUT SHAFT ROTATION

Make sure that the input shaft rotates smoothly.

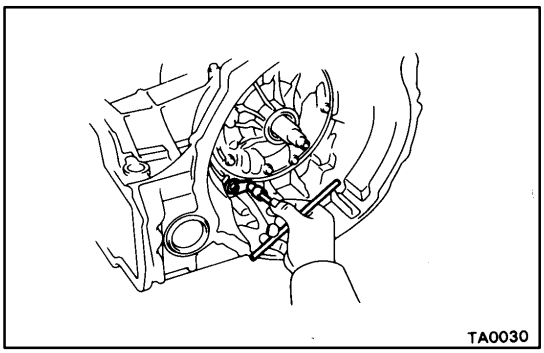

35. INSTALL DRIVE PINION CAP

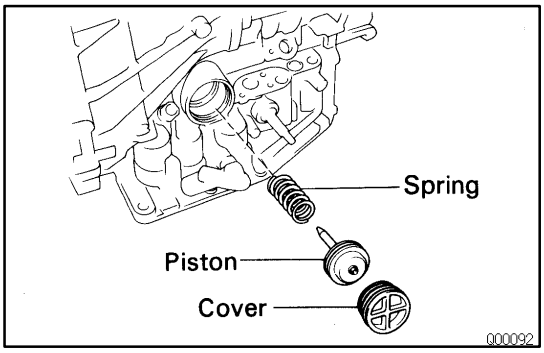

36. INSTALL SECOND COAST BRAKE PISTON

(a) Coat a new O–rings with ATF and install them on the cover.

(b) Install the outer spring with the piston.

(c) Place the cover into the bore.

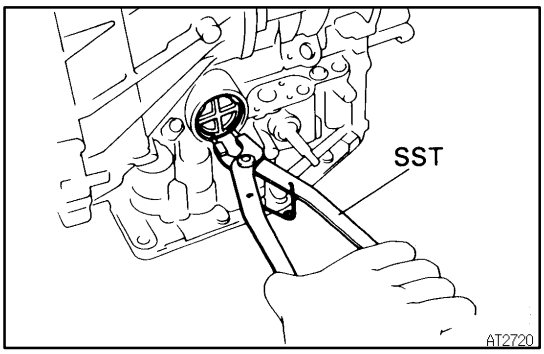

(d) Using SST, install the snap ring while pressing the cover.
SST 09350–32014 (09351–32050)

(e) Check that the front end of the piston rod contacts the center of the second brake band depression.

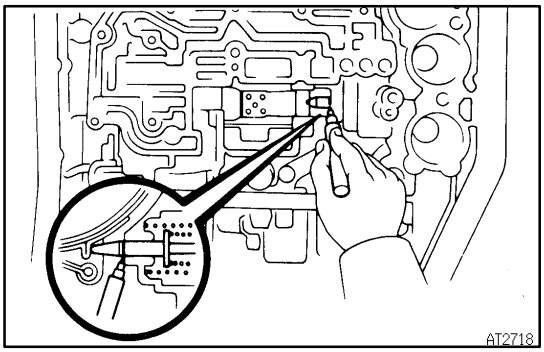

37. CHECK SECOND COAST BRAKE PISTON STROKE

(a) Apply a small amount of paint to the piston rod at the point it meets the case.

(b) Using SST, measure the piston stroke while applying and releasing compressed air (392 – 785 kPa, 4 – 8 kgf·cm, 57 – 114 psi).
SST 09240–00020
Piston stroke:
1.5 – 3.0 mm (0.059 – 0.118 in)
If the stroke is more than standard value, replace the piston rod with a longer one.
Piston rod length:
72.9 mm (2.870 in)
71.4 mm (2.811 in)

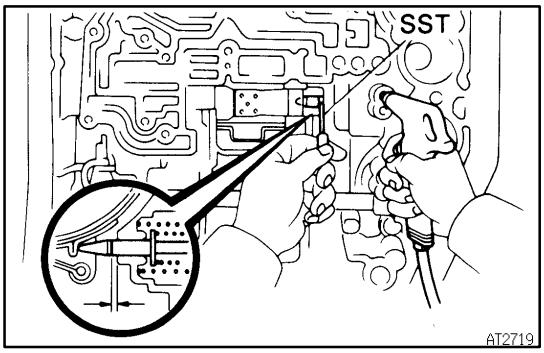

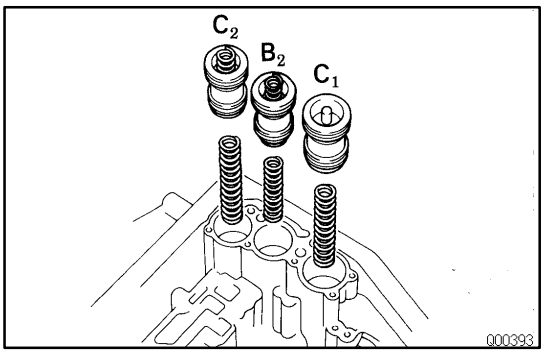

38. INSTALL ACCUMULATOR PISTONS AND SPRINGS

(a) Install the springs and pistons into the bore.

Sprnig	Free length mm (in.)	Color
C_1	57.64 (2.2693)	Red, Purple
B_2	69.39 (2.7323)	Green, White
C_2	70.21 (2.7641)	Purple

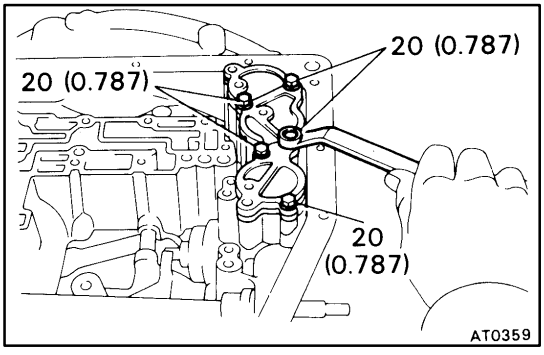

(b) Place the cover with the gasket and tighten the bolts gradually in sequence.
HINT: Each bolt length (mm, in.) is indicated in the illustration.

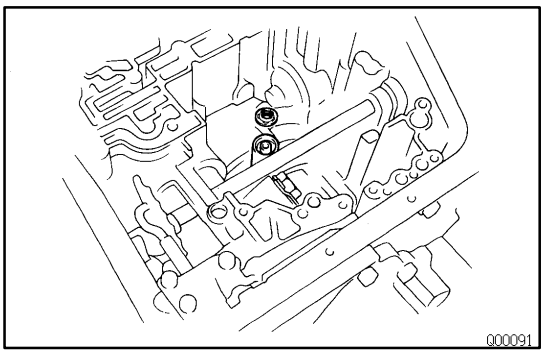

39. INSTALL NEW SECOND BRAKE APPLY GASKET

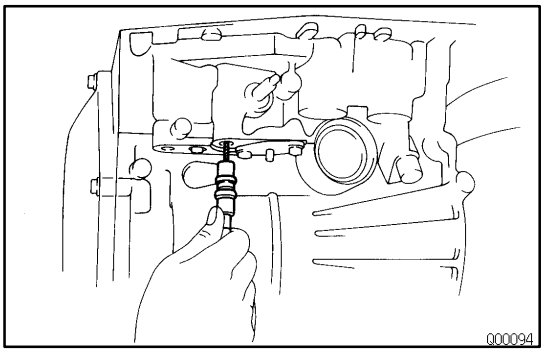

40. INSTALL THROTTLE CABLE IN CASE

Push the cable through the case, being careful not to damage the O–ring. Check for full seating.

NOTICE: In subsequent work, to avoid breaking the cable fitting do not roll the case over the cable.

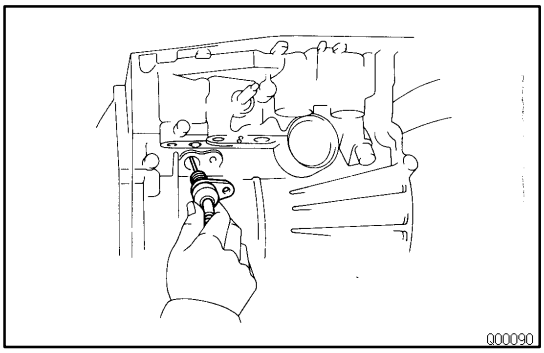

41. INSTALL SOLENOID WIRING

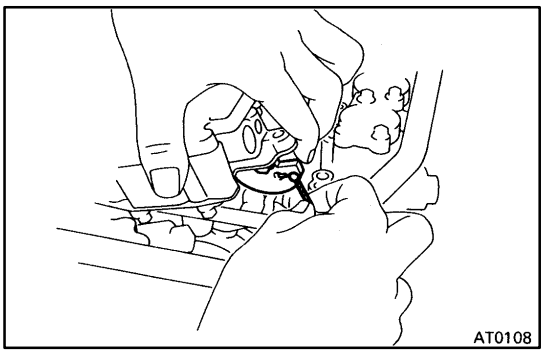

42. PLACE VALVE BODY ON TRANSAXLE

(a) While holding the cam down by your hand, slip the cable end into the slot.

(b) Lower the valve body into place.

NOTICE: Do not entangle the kick–down switch wire or solenoid wire.

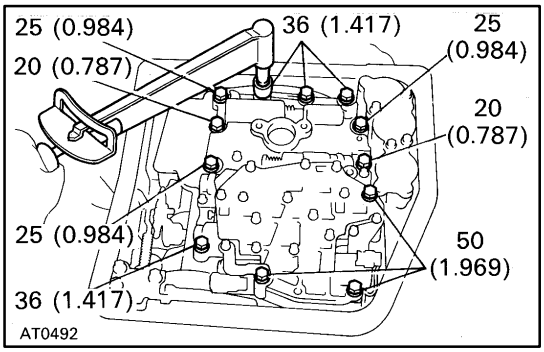

43. INSTALL BOLTS IN VALVE BODY

HINT: Each bolt length (mm, in.) is indicated in the illustration. Hand tighten the 12 bolts first, then torque with a torque wrench.

Torque: 10 N·m (100 kgf·cm, 7 ft·lbf)

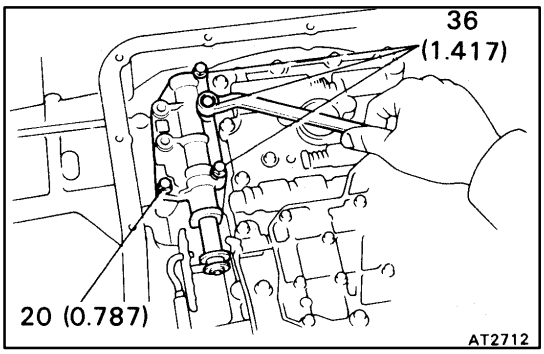

44. INSTALL MANUAL VALVE BODY AND DETENT SPRING

HINT: Each bolt length (mm, in.) is indicated in the illustration.

(a) Align the manual valve with the pin on the manual shaft lever.

(b) Lower the manual valve body into place.

(c) Hand tighten the 4 bolts first. Then, tighten them with a torque wrench.
Torque: 10 N·m (100 kgf·cm, 7 ft·lbf)

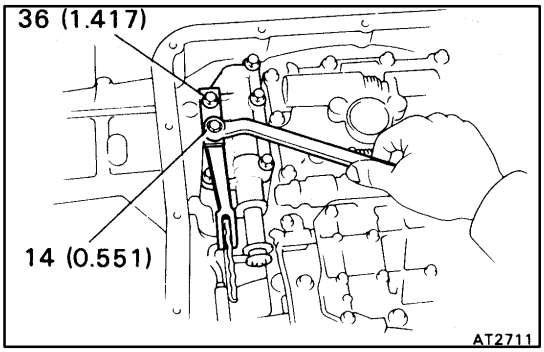

(d) Place the detent spring on the manual valve body and hand tighten the 2 bolts first.
Then, tighten them with a torque wrench.
Torque: 10 N·m (100 kgf·cm, 7 ft·lbf)

(e) Check that the manual valve lever is touching the center of the detent spring tip roller.

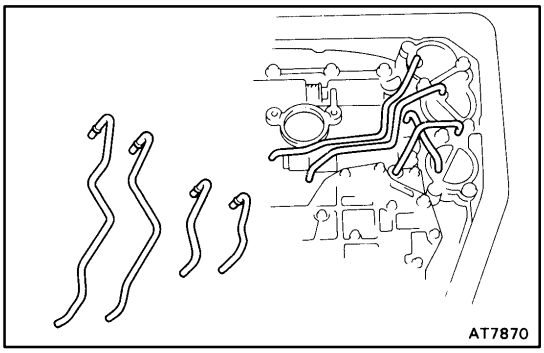

45. INSTALL OIL TUBES

Using a plastic hammer, install the 4 tubes into the positions indicated in the illustration.
NOTICE: Be careful not to bend or damage the tubes.

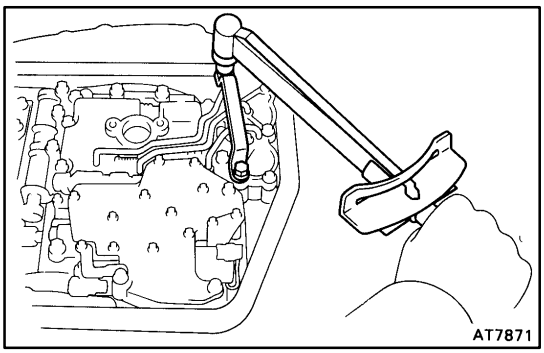

46. INSTALL TUBE BRACKET

Torque: 10 N·m (100 kgf·cm, 7 ft·lbf)

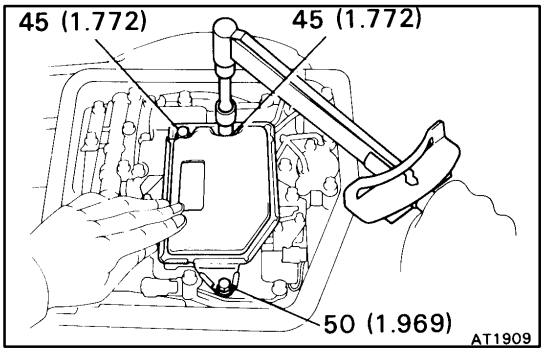

47. INSTALL OIL STRAINER

Each bolt length (mm, in.) is indicated in the figure.
Torque: 10 N·m (100 kgf·cm, 7 ft·lbf)

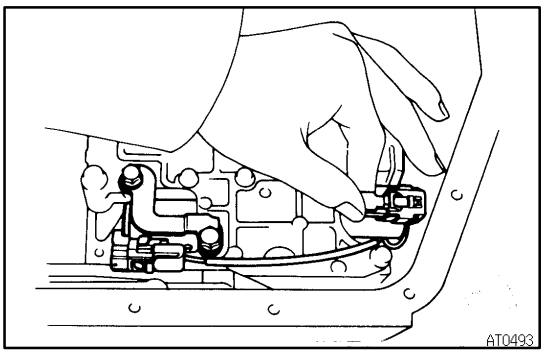

48. CONNECT SOLENOID WIRING

(a) Connect the No.1 solenoid connector. (white and shorter wire)

(b) Connect the No.2 solenoid connector. (black and longer wire)

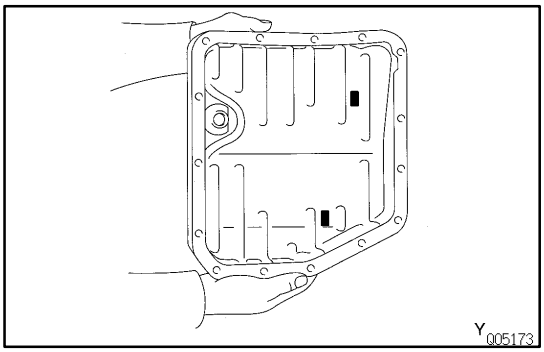

49. INSTALL 3 MAGNETS IN PLACE

NOTICE: Make sure that the magnets do not interfere with the oil tubes.

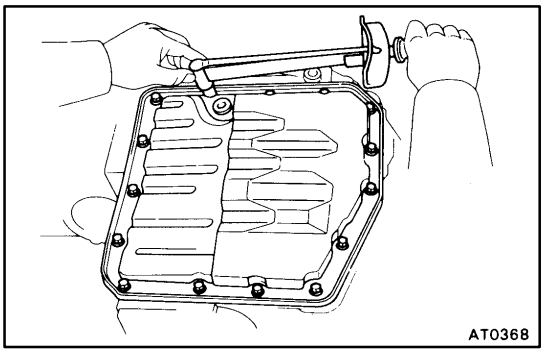

50. INSTALL OIL PAN WITH NEW GASKET

Torque: 4.9 N·m (50 kgf·cm, 43 in.·lbf)

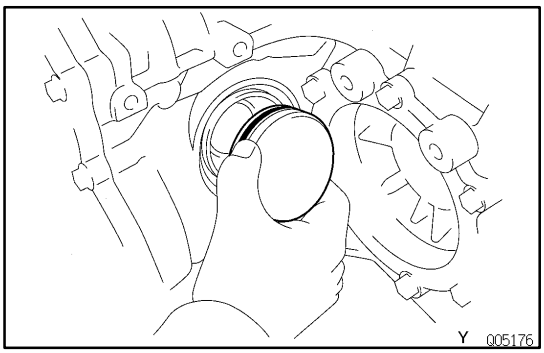

51. INSTALL COVER

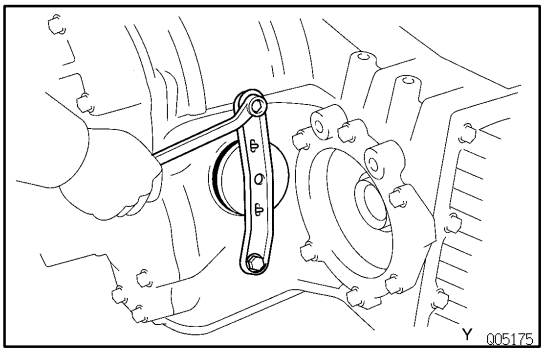

52. INSTALL COVER BRACKET

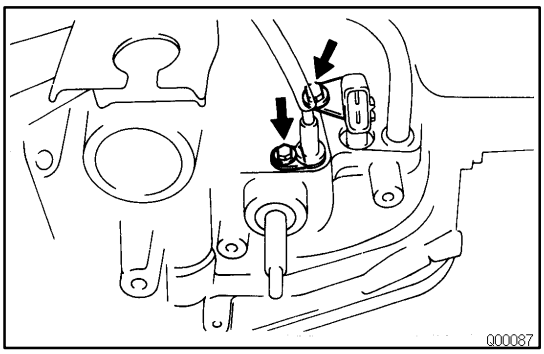

53. INSTALL SOLENOID WIRING RETAINING PLATE

54. INSTALL THROTTLE CABLE RETAINING PLATE

55. INSTALL FILLER TUBE AND BRACKET

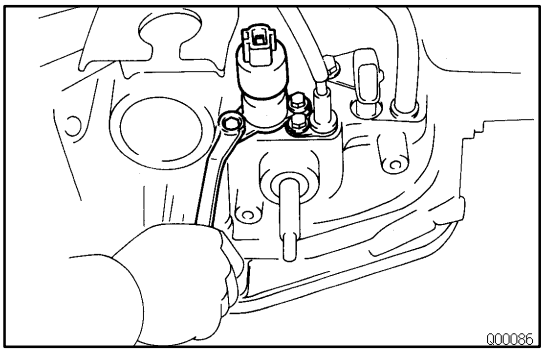

56. INSTALL SL SOLENOID

(a) Coat the O–ring with ATF and push the tip of SL solenoid into the hole.

(b) Tighten the 2 bolts evenly and gradually.

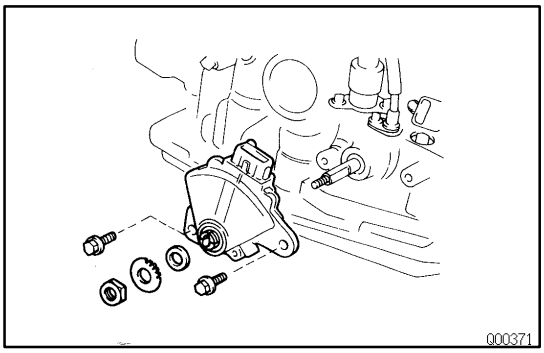

57. INSTALL PARK/NEUTRAL POSITION SWITCH

(a) Install the park/neutral position switch to the manual valve shaft.

(b) Install the seal gasket and locking plate.

(c) Tighten the nut and stake it with the locking plate.
Torque: 6.9 N·m (70 kgf·cm, 61 in.·lbf)

58. ADJUST PARK/NEUTRAL POSITION SWITCH

(a) Align the groove and return neutral basic line.

(b) Lock the switch with 2 bolts.
Torque: 5.4 N·m (55 kgf·cm, 48 in.·lbf)

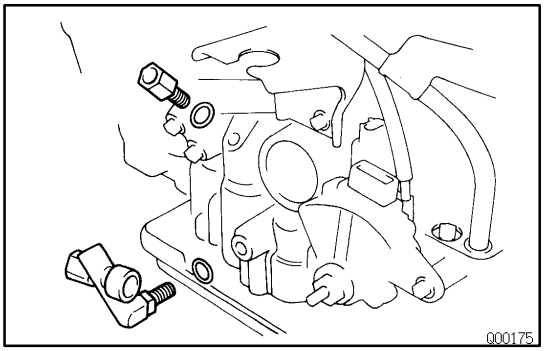

59. INSTALL UNION AND ELBOW

(a) Coat a new O–rings with ATF.

(b) Install the O–rings to the union and elbow.

(c) Install the union and elbow to the transaxle case.
Torque: 27 N·m (275 kgf·cm, 20 ft·lbf)

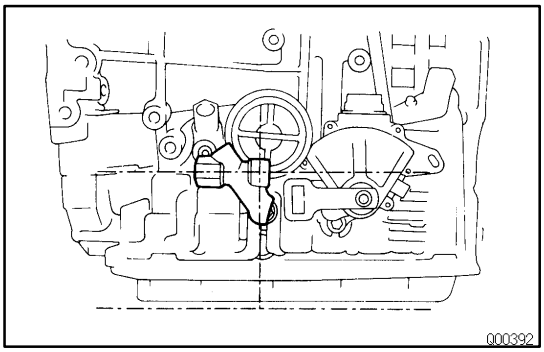

HINT: Install the elbow as shown in the illustration.

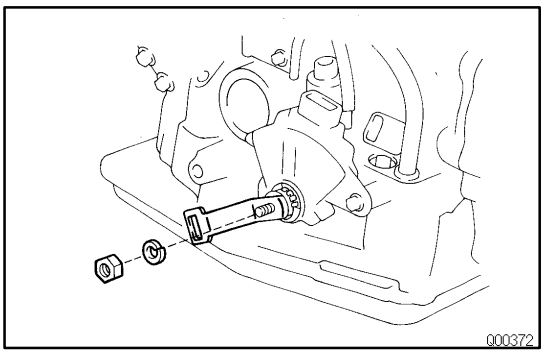

60. INSTALL MANUAL SHIFT LEVER

AUTOMATIC TRANSAXLE SYSTEM

AX034–01

PRECAUTION

If the vehicle is equipped with a mobile communication system, refer to the precautions in the IN section.

AX035–01

OPERATION

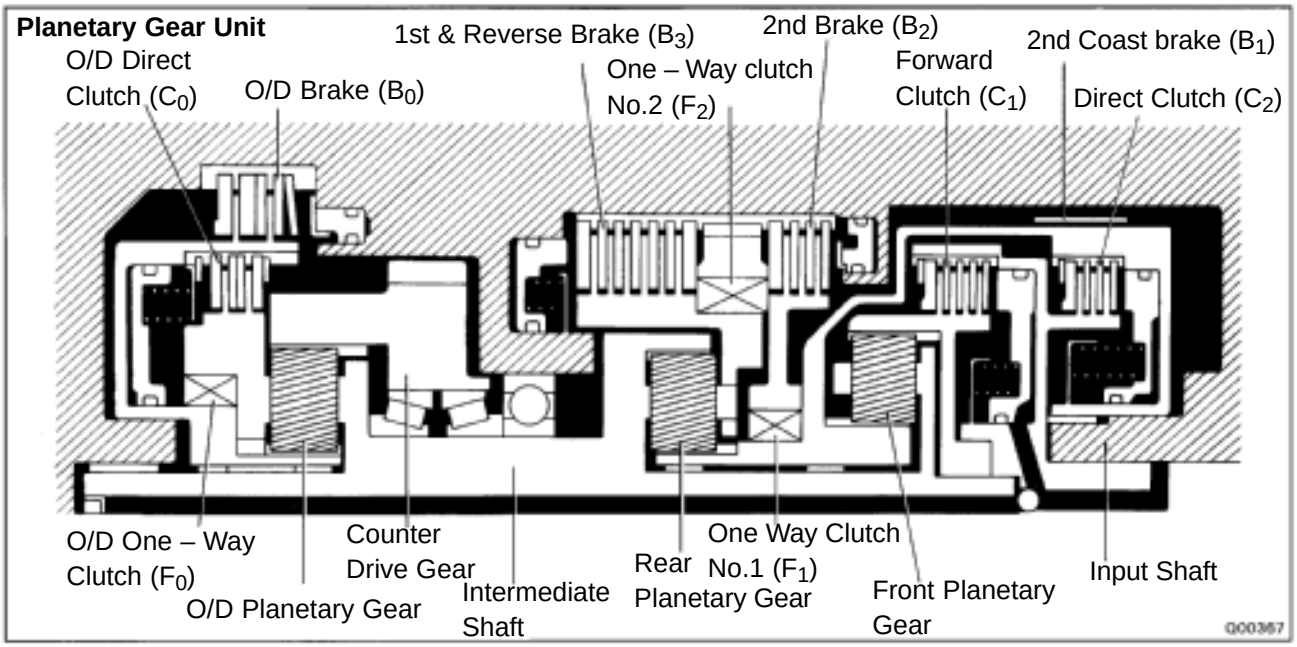

Shift lever position	Gear position	C_0	C_1	C_2	B_0	B_1	B_2	B_3	F_0	F_1	F_2
P	Parking	•									
R	Reverse	•		•				•			
N	Neutral	•									
D	1st	•	•						•		•
	2nd	•	•				•		•	•	
	3rd	•	•	•			•		•		
	O/D		•	•	•		•				
2	1st	•	•						•		•
	2nd	•	•			•	•		•	•	
	*3rd	•	•	•			•		•		
L	1st	•	•					•	•		•
	*2nd	•	•			•	•		•	•	

• : Operating
*: Down–shift only in the 3rd gear for the 2 position and 2nd gear for the L position no up–shift.

D00989

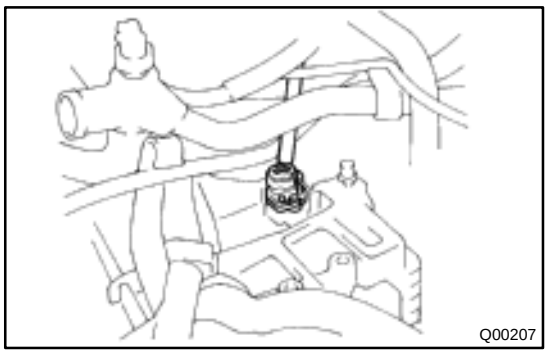
Q00207

VEHICLE SPEED SENSOR

AX036–01

ON–VEHICLE REPAIR

1. REMOVE AIR CLEANER ASSEMBLY

2. DISCONNECT VEHICLE SPEED SENSOR CONNECTOR

3. REMOVE VEHICLE SPEED SENSOR ASSEMBLY

(a) Remove the bolt and vehicle speed sensor assembly.

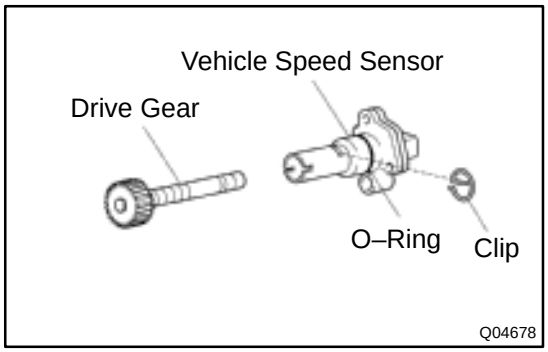

Q04678

(b) Remove the clip and speedometer driven gear from vehicle speed sensor.

(c) Remove the O–ring from vehicle speed sensor.

4. INSTALL VEHICLE SPEED SENSOR ASSEMBLY

(a) Coat a new O–ring with ATF and install it to the vehicle speed sensor.

(b) Install the speedometer driven gear to the vehicle speed sensor and clip.

(c) Install the vehicle speed sensor assembly and torque the bolts.

Torque: 16 N·m (160 kgf·cm, 12 ft·lbf)

5. CONNECT VEHICLE SPEED SENSOR CONNECTOR

6. INSTALL AIR CLEANER ASSEMBLY

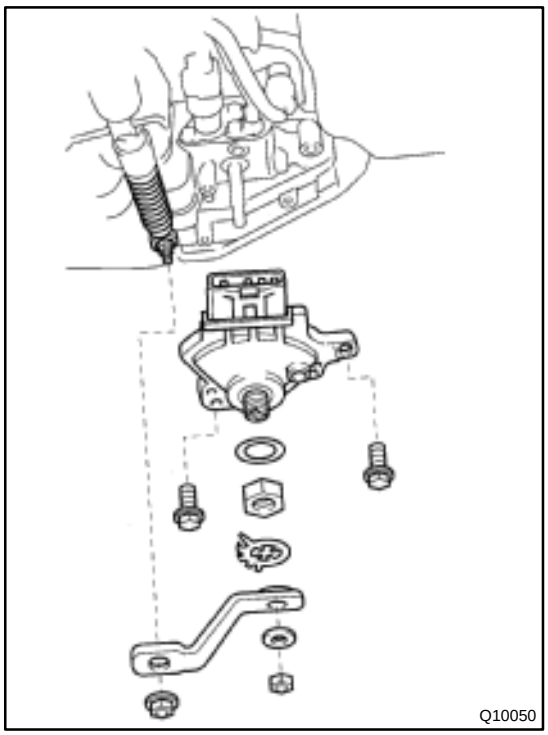

PARK/NEUTRAL POSITION (PNP) SWITCH

AX037–01

ON–VEHICLE REPAIR

1. REMOVE CONTROL SHAFT LEVER

(a) Remove the nut and control cable.

(b) Remove the nut, washer and control shaft lever.

2. DISCONNECT PARK/NEUTRAL POSITION SWITCH CONNECTOR

3. REMOVE PARK/NEUTRAL POSITION SWITCH

(a) Pry off the lock washer and remove the nut.

(b) Remove the 2 bolts and park/neutral position switch.

4. INSTALL PARK/NEUTRAL POSITION SWITCH

(a) Install the park/neutral position switch with 2 bolts.
Torque: 5.4 N·m (55 kgf·cm, 48 in.·lbf)

(b) Install a new lock plate and the nut.
Torque: 6.9 N·m (70 kgf·cm, 61 in.·lbf)

(c) Bend claws on the lock plate to fix the nut.

(d) Adjust the park/neutral position switch.
(See page DI–389)

5. CONNECT PARK/NEUTRAL POSITION SWITCH CONNECTOR

6. INSTALL CONTROL SHAFT LEVER

(a) Install the control shaft lever, washer and nut.
Torque: 13 N·m (130 kgf·cm, 9 ft·lbf)

(b) Install the control cable and nut.
Torque: 15 N·m (150 kgf·cm, 11 ft·lbf)

VALVE BODY ASSEMBLY

AX038–01

ON–VEHICLE REPAIR

1. DRAIN TRANSAXLE FLUID

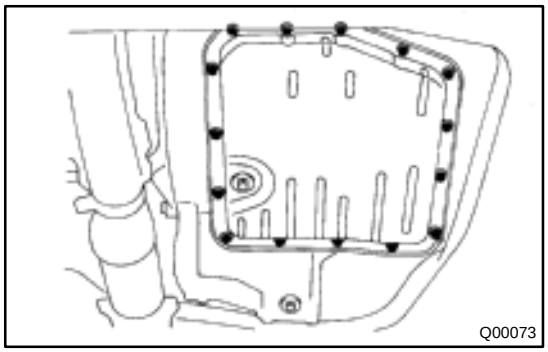

2. REMOVE OIL PAN AND GASKET

NOTICE:

Some fluid will remain in the oil pan.

Remove the oil pan bolts, and carefully remove the oil pan assembly. Discard the gasket.

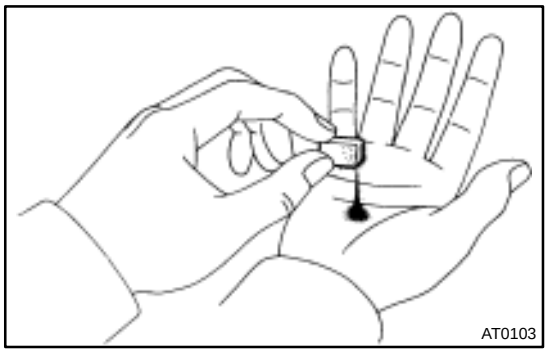

3. EXAMINE PARTICLES IN PAN

Remove the magnets and use them to collect any steel chips. Look carefully at the chips and particles in the pan and on the magnet to anticipate what type of wear you will find in the transaxle.

- Steel (magnetic): bearing, gear and plate wear
- Brass (non–magnetic): bushing wear

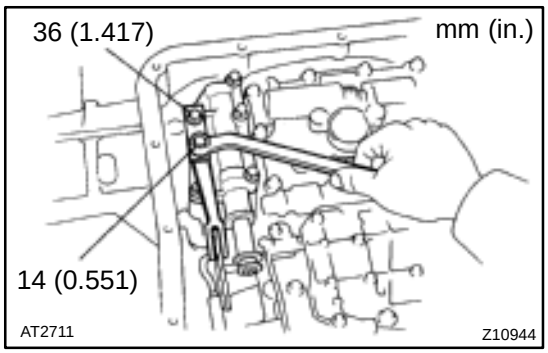

4. REMOVE MANUAL VALVE BODY DETENT SPRING AND MANUAL VALVE BODY

(a) Remove the detent spring on the manual valve body.

(b) Remove the manual valve body.

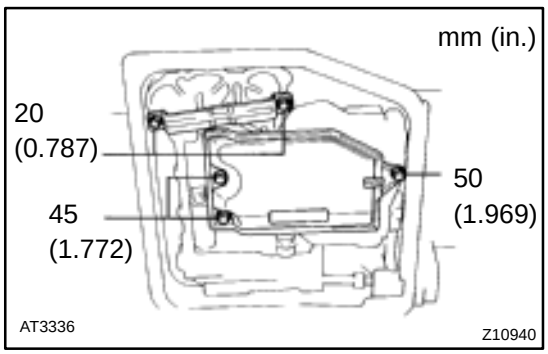

5. REMOVE OIL STRAINER AND OIL PIPE BRACKET

(a) Remove the 3 bolts and the oil strainer.

(b) Remove the 2 bolts and oil pipe bracket.

NOTICE:

Be careful as oil will come out of the strainer when it is removed.

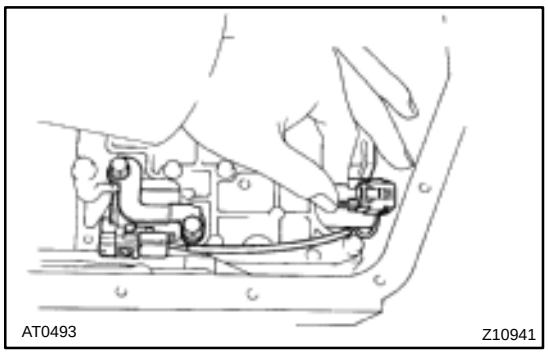

6. DISCONNECT SOLENOID CONNECTORS

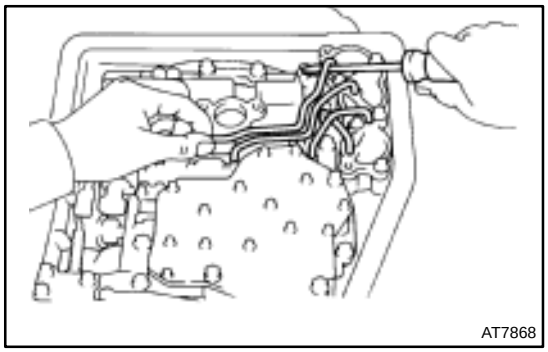

7. REMOVE OIL PIPES

Pry up the both pipe ends with a large screwdriver and remove the 4 pipes.

NOTICE:

Be careful not to bend or damage the pipe.

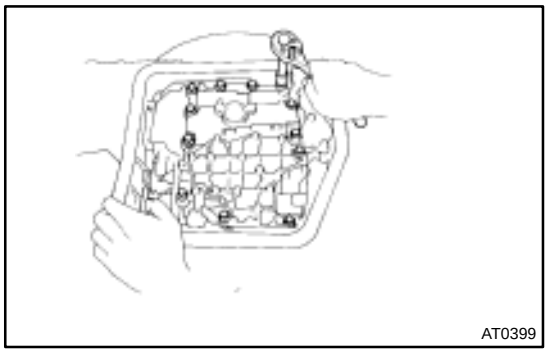

8. REMOVE VALVE BODY

Remove the 12 bolts.

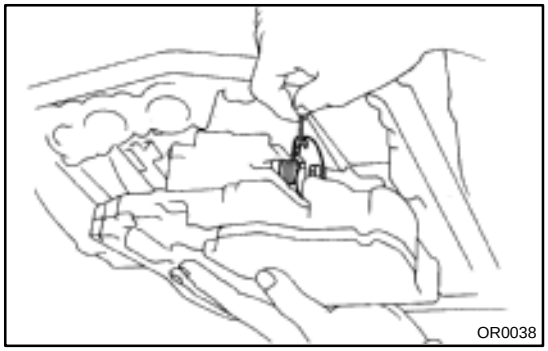

9. REMOVE THROTTLE CABLE

(a) Disconnect the throttle cable.

(b) Remove the valve body.

10. REMOVE 2ND BRAKE APPLY GASKET

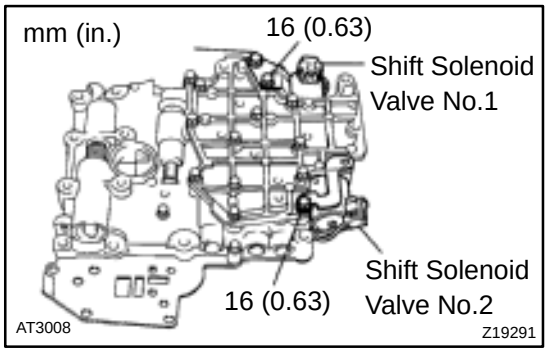

11. REMOVE SHIFT SOLENOID VALVE NO.1 AND NO.2

(a) Remove the 2 bolts and shift solenoid valve No.1.

(b) Remove the bolt and shift solenoid valve No.2.

(c) Remove the 2 O–rings from the shift solenoid valve No.1 and No.2.

12. INSTALL SHIFT SOLENOID VALVE NO.1 AND NO.2

(a) Coat 2 new O–rings with ATF.

(b) Install the 2 O–rings to the shift solenoid valve No.1 and No.2.

(c) Install the shift valve No.1 with the 2 bolts.
Torque: 5.4 N·m (55 kgf·cm, 48 in.·lbf)

(d) Install the shift valve No.2 with the bolt.
Torque: 5.4 N·m (55 kgf·cm, 48 in.·lbf)

13. INSTALL NEW 2ND BRAKE APPLY GASKET

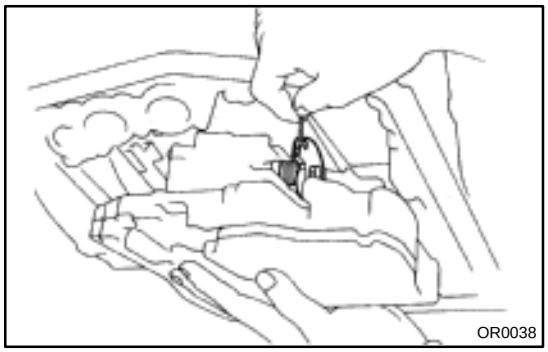

14. INSTALL VALVE BODY

(a) While holding the cam down by your hand, slip the cable end into the slot.

NOTICE:
Do not entangle the solenoid wire.

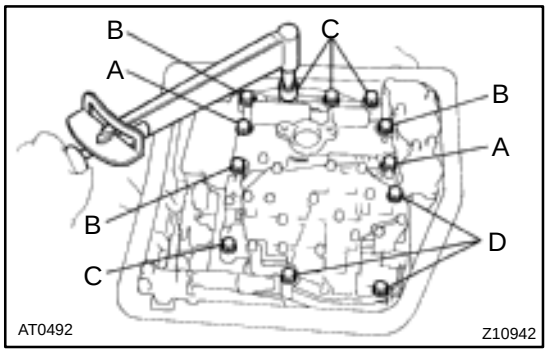

(b) Install the valve body with the 12 bolts.

HINT:

Temporarily install the 12 bolts first, then tighten the 12 bolts.
Torque: 10 N·m (100 kgf·cm, 7 ft·lbf)
Bolt length:
Bolt A: 20 mm (0.79 in.)
Bolt B: 25 mm (0.98 in.)
Bolt C: 36 mm (1.42 in.)
Bolt D: 50 mm (1.97 in.)

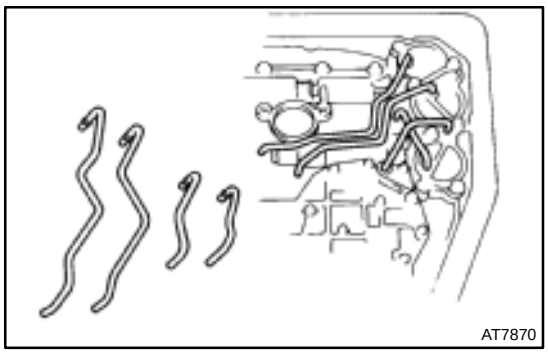

15. INSTALL OIL PIPES

Using a plastic hammer, install the 4 pipes into the positions indicated in the illustration.

NOTICE:
Be careful not to bend or damage the pipes.

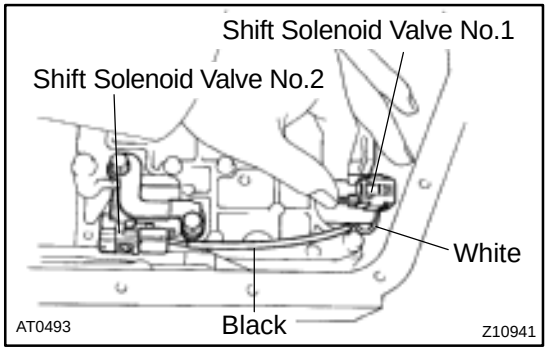

16. CONNECT SOLENOID CONNECTORS

Connect the black wire harness to shift solenoid valve No.2 and white wire harness to shift solenoid valve No.1.

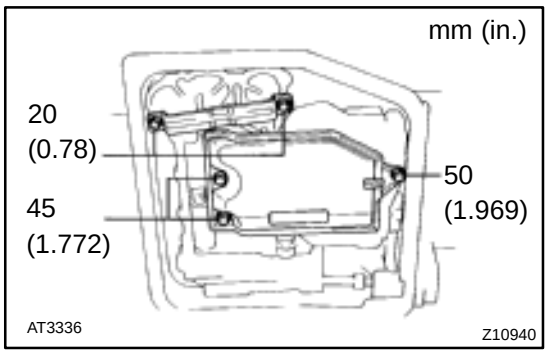

17. INSTALL OIL STRAINER AND OIL PIPE BRACKET

(a) Install the 2 bolts and oil pipe bracket.
Torque: 10 N·m (100 kgf·cm, 7 ft·lbf)

(b) Install the 3 bolts and oil strainer.
Torque: 10 N·m (100 kgf·cm, 7 ft·lbf)

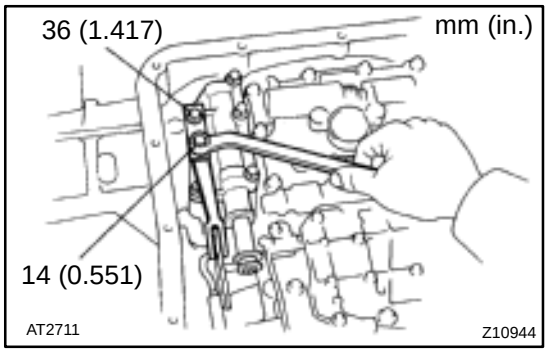

18. INSTALL MANUAL VALVE BODY DETENT SPRING AND MANUAL VALVE BODY

(a) Align the manual valve with the pin on the manual shaft lever.

(b) Lower the manual valve body into place.

(c) Temporarily install the 4 bolts first. Then, tighten them with a torque wrench.
Torque: 10 N·m (100 kgf·cm, 7 ft·lbf)

(d) Place the detent spring on the manual valve body and temporarily install the 2 bolts first.
Torque: 10 N·m (100 kgf·cm, 7 ft·lbf)

(e) Check that the manual valve lever is touching the center of the detent spring tip roller.

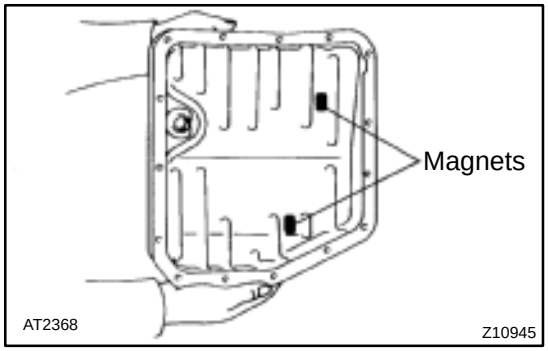

19. INSTALL MAGNETS IN OIL PAN

NOTICE:
Make sure that the magnets do not interfere with the oil pipes.

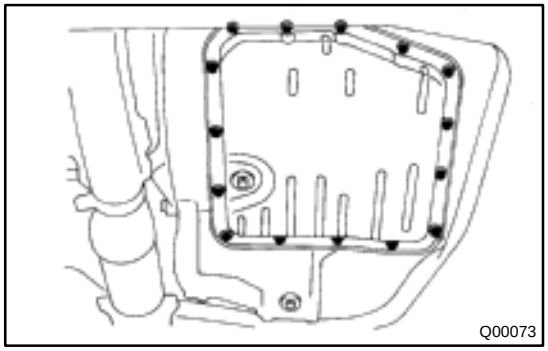

20. INSTALL OIL PAN AND GASKET

Install a new gasket and oil pan with the 15 bolts.
Torque: 4.9 N·m (50 kgf·cm, 43 in.·lbf)

21. FILL FLUID AND CHECK FLUID LEVEL
(See page DI–389)

THROTTLE CABLE

AX039–01

ON–VEHICLE REPAIR

1. DISCONNECT THROTTLE CABLE

(a) Disconnect the cable from the throttle linkage.

(b) Disconnect the cable from the cable clamps in the engine compartment.

2. REMOVE PARK/NEUTRAL POSITION SWITCH (See page AX–4)

3. REMOVE VALVE BODY (See page AX–5)

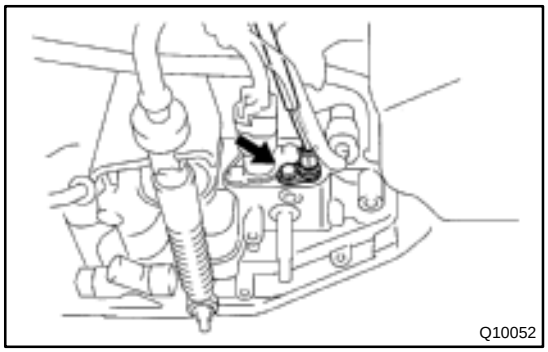

4. REMOVE THROTTLE CABLE

(a) Remove the retaining bolt and plate.

(b) Pull out the cable from the transaxle case.

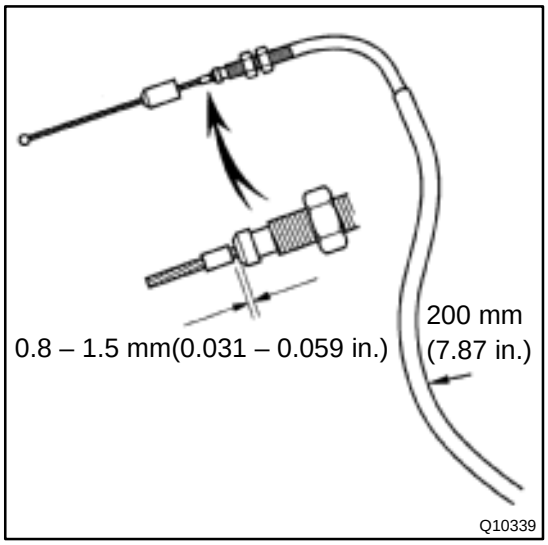

5. IF THROTTLE CABLE IS NEW, STAKE STOPPER OR PAINT MARK ON INNER CABLE

HINT:

New cable does not have a staked cable stopper.

(a) Bend the cable to ensure a radius of about 200 mm (7.87 in.).

(b) Pull the inner cable lightly until a slight resistance is felt, and hold it there.

(c) Stake the stopper, 0.8 – 1.5 mm (0.031 – 0.059 in.) from the end of the outer cable.

(d) Install a new O–ring to the throttle cable.

(e) Push in the throttle cable and install the retaining bolt.

6. INSTALL VALVE BODY (See page AX–5)

7. INSTALL PARK/NEUTRAL POSITION SWITCH (See page AX–4)

8. CONNECT THROTTLE CABLE

9. FILL FLUID AND CHECK FLUID LEVEL (See page DI–389)

10. ADJUST THROTTLE CABLE (See page DI–389)

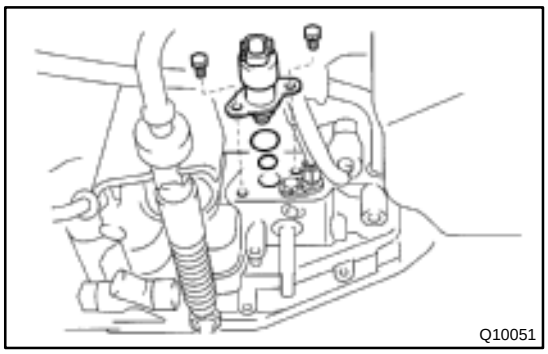
Q10051

SHIFT SOLENOID VALVE SL

AX03A–01

ON–VEHICLE REPAIR

1. REMOVE PARK/NEUTRAL POSITION SWITCH
(See page AX–4)

2. DISCONNECT SHIFT SOLENOID VALVE SL CONNECTOR

3. REMOVE SHIFT SOLENOID VALVE SL

(a) Remove the 2 bolts and shift solenoid valve SL.

(b) Remove the 2 O–rings from the shift solenoid valve SL.

4. INSTALL SHIFT SOLENOID VALVE SL

(a) Coat 2 new O–rings with ATF and install them to the shift solenoid valve SL.

(b) Install the shift solenoid valve SL and 2 bolts.

5. CONNECT SHIFT SOLENOID VALVE SL CONNECTOR

6. INSTALL PARK/NEUTRAL POSITION SWITCH
(See page AX–4)

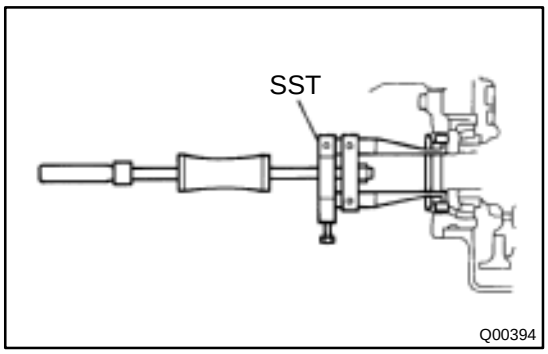

DIFFERENTIAL OIL SEAL

AX03B–01

ON–VEHICLE REPAIR

1. REMOVE LH AND RH DRIVE SHAFTS
(See page SA–17)

2. REMOVE SIDE GEAR SHAFT OIL SEAL

Using SST, drive out the oil seals on both sides.
SST 09308–00010

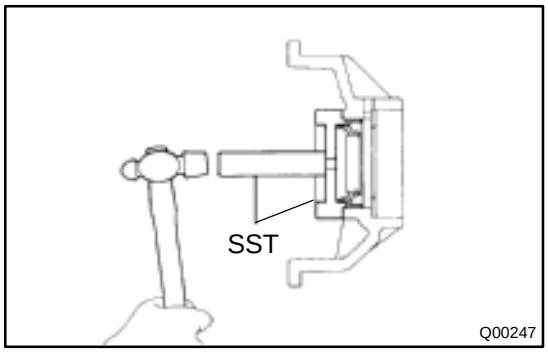

3. INSTALL SIDE GEAR SHAFT OIL SEAL

(a) Using SST, drive in a new oil seal.
SST 09350–32014 (09351–32130, 09351–32150)
Oil seal depth:
LH: 2.7 ± 0.5 mm (0.106 ± 0.020 in.)
RH: 0 ± 0.5 mm (0 ± 0.020 in.)

(b) Coat the lip of oil seal with MP grease.

4. INSTALL LH AND RH DRIVE SHAFTS
(See page SA–24)

5. CHECK TRANSAXLE FLUID LEVEL
(See page DI–389)

SHIFT LOCK SYSTEM (TMC Made)

AX03C–01

LOCATION

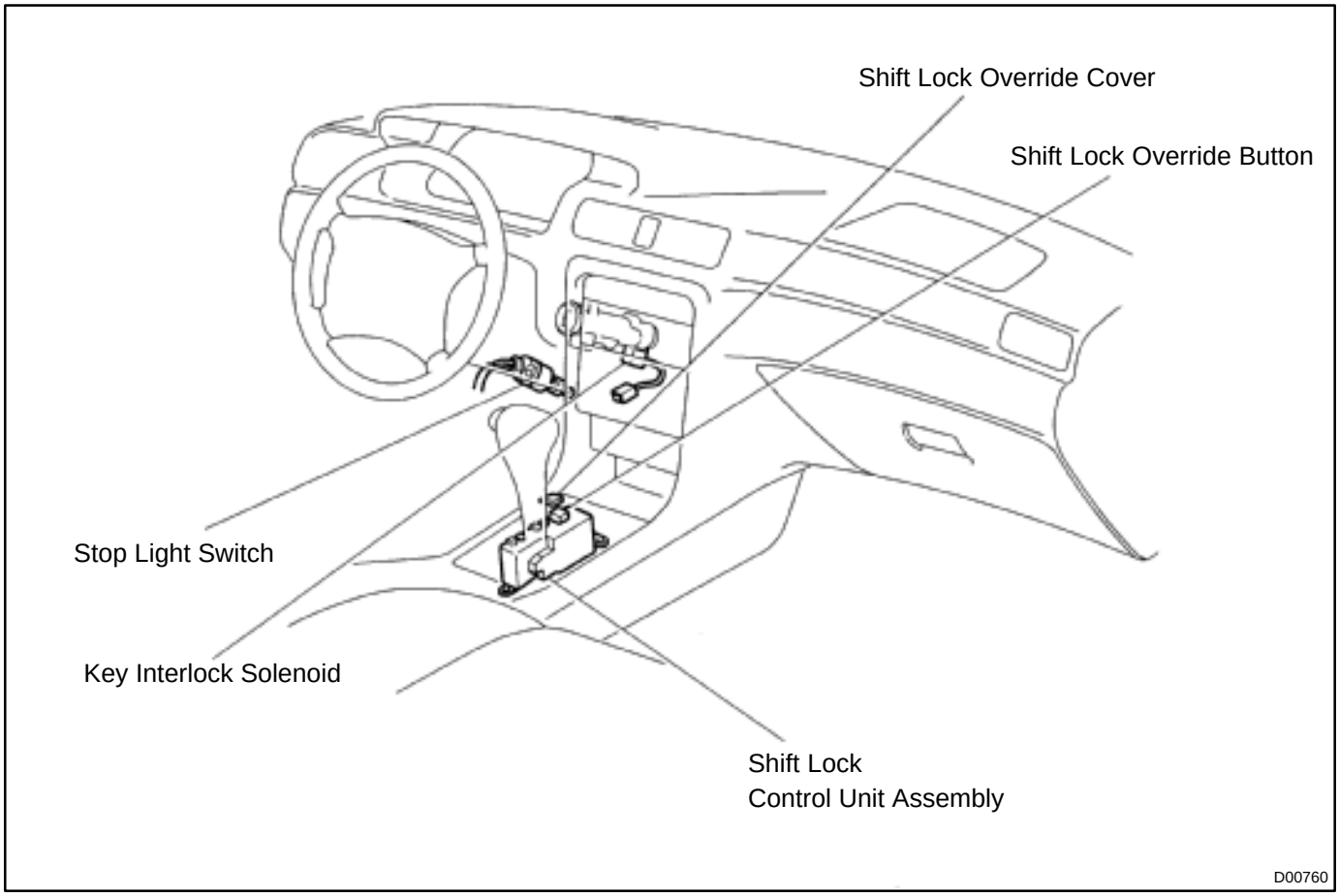

AX03D–01

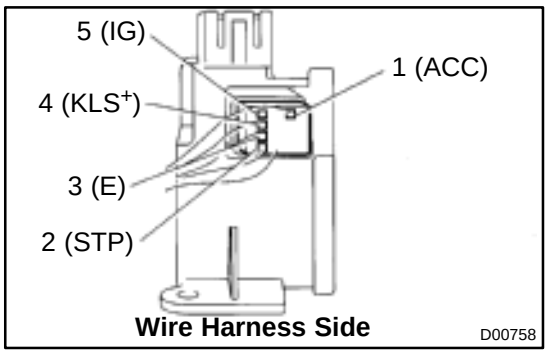

INSPECTION

1. INSPECT SHIFT LOCK CONTROL UNIT ASSEMBLY

Using a voltmeter, measure the voltage at each terminal.

HINT:

Do not disconnect the shift lock control unit assembly connector.

Terminal	Measuring Condition	Voltage (V)
1 – 3 (ACC – E)	Ignition switch ACC	10 – 14
5 – 3 (IG – E)	Ignition switch ON	10 – 14
2 – 3 (STP – E)	Depressing brake pedal	10 – 14
4 – 3 (KLS+ – E)	(1) Ignition switch ACC and P position (2) Ignition switch ACC and except P position (3) Ignition switch ACC and except P position (After approx. 1 second)	0 7.5 – 11 6 – 9.5

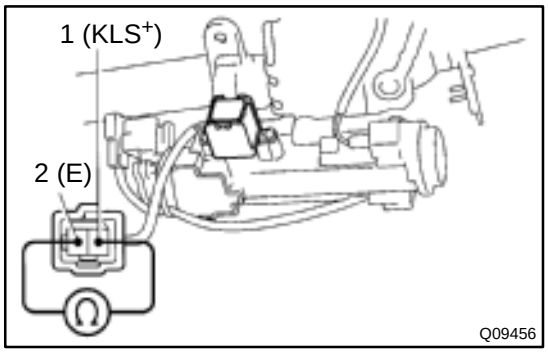

2. INSPECT KEY INTERLOCK SOLENOID

(a) Disconnect the solenoid connector.

(b) Using an ohmmeter, measure resistance between terminals.

Standard resistance: 12.5 – 16.5 Ω

If resistance value is not as specified, replace the solenoid.

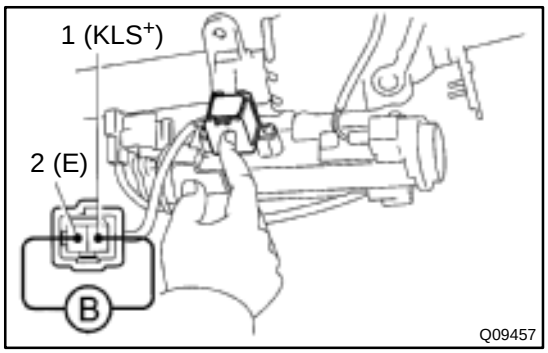

(c) Apply battery positive voltage between terminals. Check that an operation noise can be heard from the solenoid.

If the solenoid does not operate, replace the solenoid.

SHIFT LOCK SYSTEM (TMMK Made)

AX03E–01

LOCATION

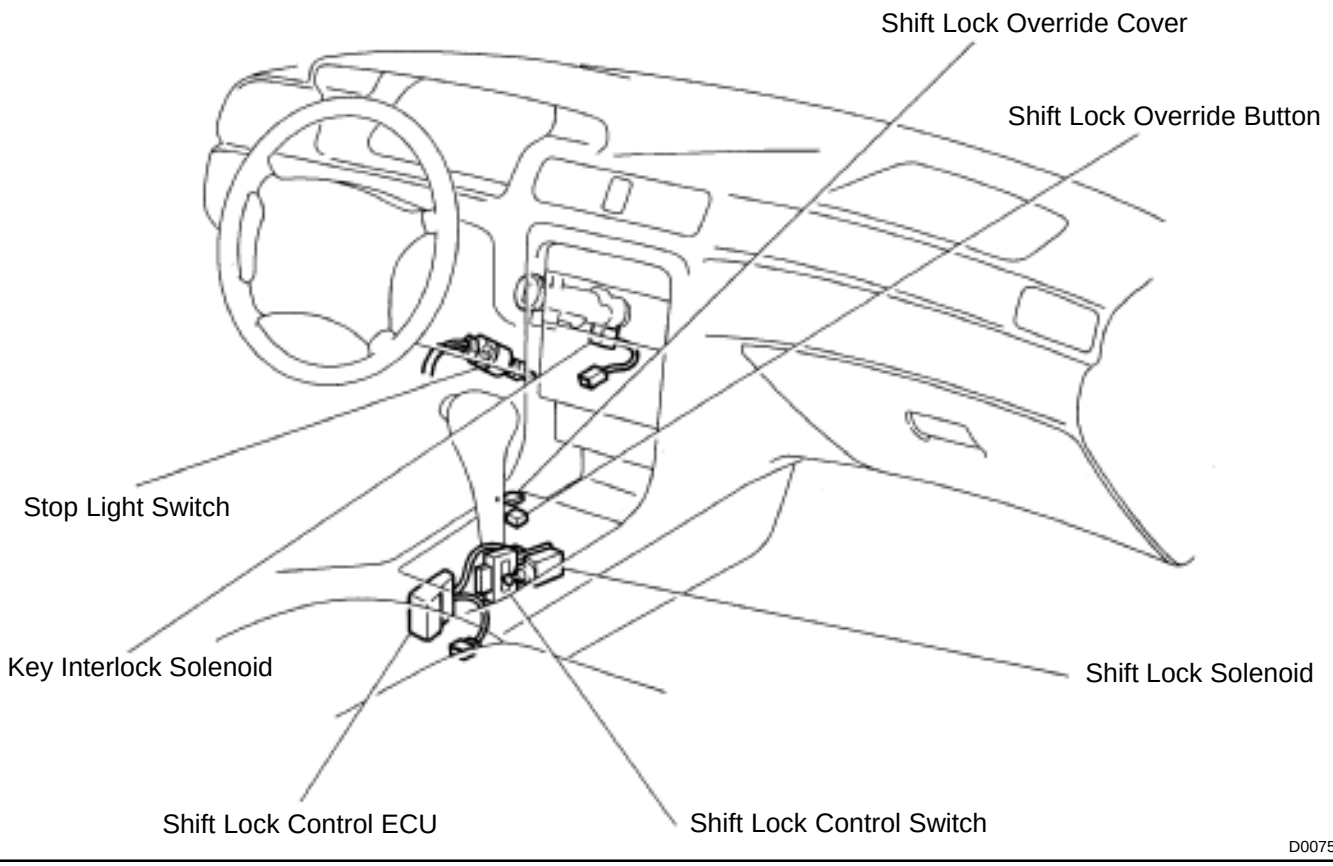

AX03F–01

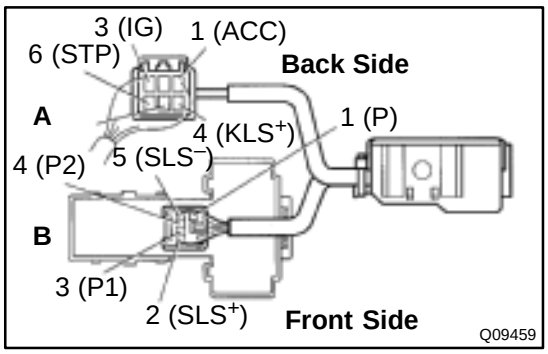

INSPECTION

1. INSPECT SHIFT LOCK CONTROL ECU

Using a voltmeter, measure voltage at each terminal.

HINT:

Do not disconnect the ECU connector.

Terminal	Measuring Condition	Voltage (V)
A, 1 – A, 5 (ACC – E)	Ignition switch ACC	10 – 14
A, 3 – A, 5 (IG – E)	Ignition switch ON	10 – 14
A, 6 – A, 5 (STP – E)	Depressing brake pedal	10 – 14
A, 4 – A, 5 (KLS^+ – E)	(1) Ignition switch ACC and P position (2) Ignition switch ACC and except P position (3) Ignition switch ACC and except P position (After approx. 1 second)	0 7.5 – 11 6 – 9.5
B, 2 – B, 5 (SLS^+ – $SLS^–$)	(1) Ignition switch ON and P position (2) Depress brake pedal (3) Except P position	0 8 – 13.5 0
B, 3 – B, 1 (P1 – P)	(1) Ignition switch ON, P position and depressing brake pedal (2) Shift except P position under conditions above	0 9 – 13.5
B, 4 – B, 1 (P2 – P)	(1) Ignition switch ACC, P position (2) Shift except P position under conditions above	9 – 13.5 0

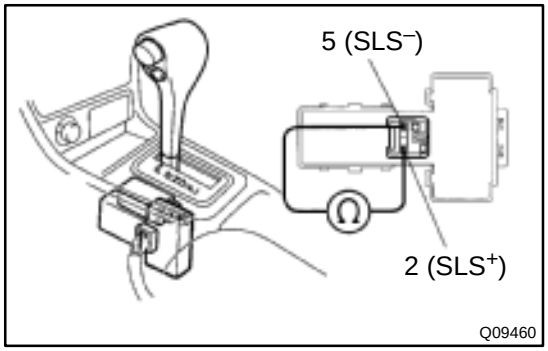

2. INSPECT SHIFT LOCK SOLENOID

(a) Disconnect the solenoid connector.

(b) Using an ohmmeter, measure resistance between terminals.

Standard resistance: 29 – 35 Ω

If resistance value is not as specified, replace the solenoid.

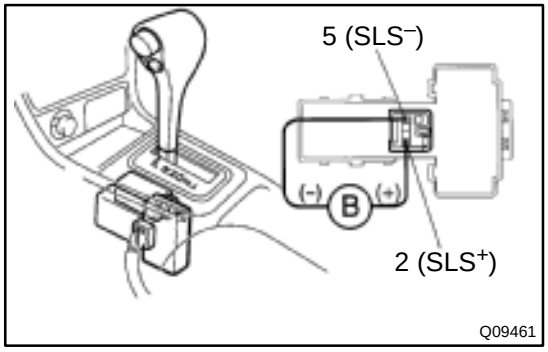

(c) Apply battery positive voltage between terminals. Check that operation noise can be heard from the solenoid.

If the solenoid does not operate, replace the solenoid.

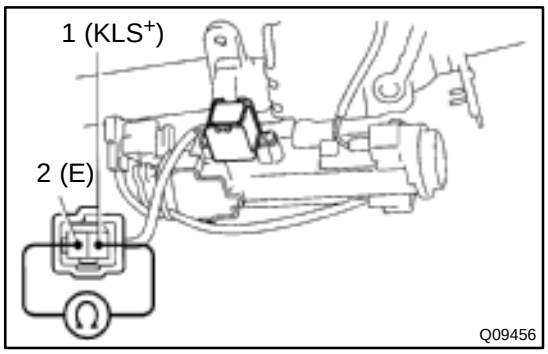

3. INSPECT KEY INTERLOCK SOLENOID

(a) Disconnect the solenoid connector.

(b) Using an ohmmeter, measure resistance between terminals.

Standard resistance: 12.5 – 16.5 Ω

If resistance value is not as specified, replace the solenoid.

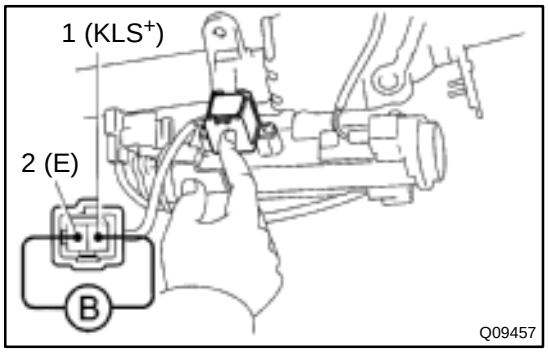

(c) Apply battery positive voltage between terminals. Check that an operation noise can be heard from the solenoid.

If the solenoid does not operate, replace the solenoid.

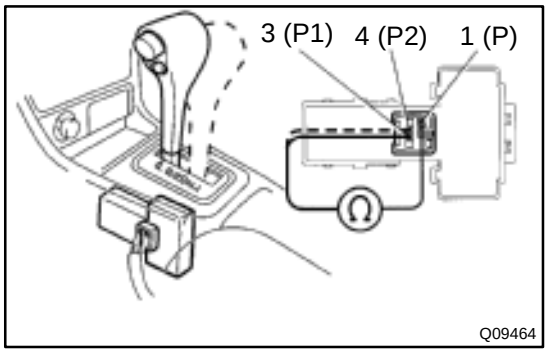

4. INSPECT SHIFT LOCK CONTROL SWITCH

Inspect that there is continuity between each terminal.

Shift position	Tester connection	Specified value
P position (Release button is not pushed)	1 – 3 (P – P1)	Continuity
P position (Release button is pushed)	1 – 3 (P – P1) 1 – 4 (P – P2)	Continuity
R, N, D, 2, L position	1 – 4 (P – P2)	Continuity

If continuity is not as specified, replace the switch.

AUTOMATIC TRANSAXLE UNIT

AX03G–01

COMPONENTS

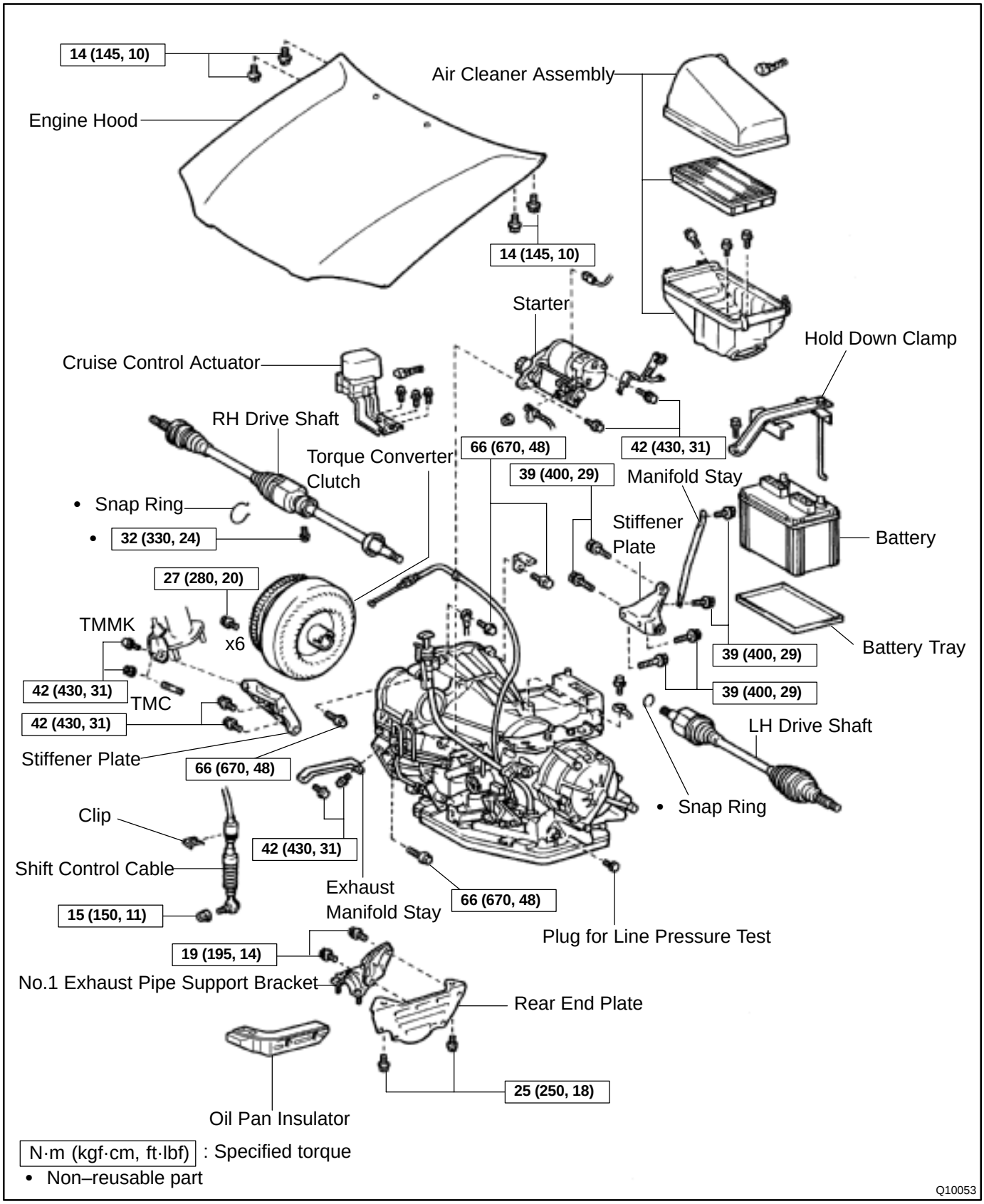

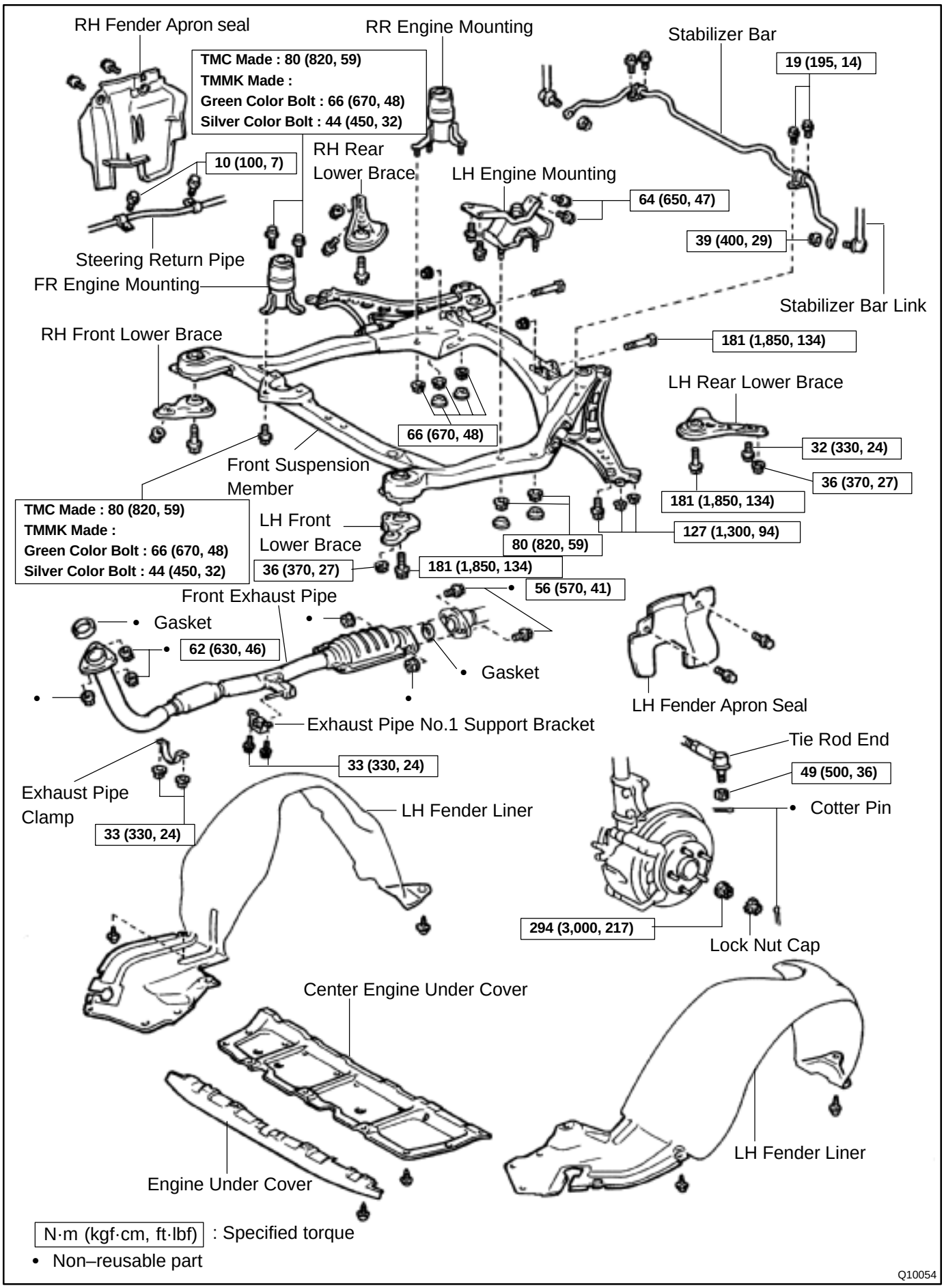
RH Fender Apron seal
RR Engine Mounting
Stabilizer Bar
TMC Made : 80 (820, 59)
TMMK Made :
Green Color Bolt : 66 (670, 48)
Silver Color Bolt : 44 (450, 32)
19 (195, 14)
10 (100, 7)
RH Rear Lower Brace
LH Engine Mounting
64 (650, 47)
39 (400, 29)
Steering Return Pipe
FR Engine Mounting
Stabilizer Bar Link
RH Front Lower Brace
181 (1,850, 134)
LH Rear Lower Brace
66 (670, 48)
32 (330, 24)
36 (370, 27)
Front Suspension Member
181 (1,850, 134)
TMC Made : 80 (820, 59)
TMMK Made :
Green Color Bolt : 66 (670, 48)
Silver Color Bolt : 44 (450, 32)
LH Front Lower Brace
127 (1,300, 94)
80 (820, 59)
36 (370, 27)
181 (1,850, 134)
56 (570, 41)
Front Exhaust Pipe
Gasket
62 (630, 46)
Gasket
LH Fender Apron Seal
Exhaust Pipe No.1 Support Bracket
Tie Rod End
49 (500, 36)
33 (330, 24)
Cotter Pin
Exhaust Pipe Clamp
LH Fender Liner
33 (330, 24)
294 (3,000, 217)
Lock Nut Cap
Center Engine Under Cover
LH Fender Liner
Engine Under Cover
N·m (kgf·cm, ft·lbf) : Specified torque
• Non–reusable part
Q10054

AX03H–01

REMOVAL

1. REMOVE BATTERY

2. REMOVE AIR CLEANER ASSEMBLY

3. DISCONNECT THROTTLE CABLE

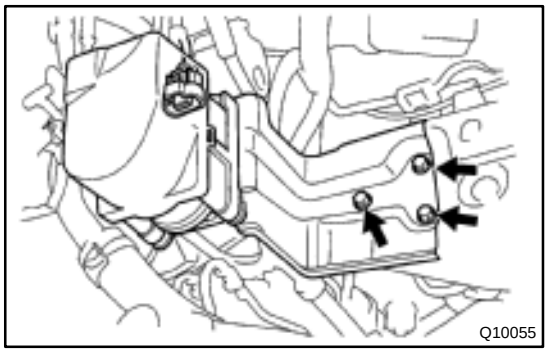

4. w/ CRUISE CONTROL:
REMOVE CRUISE CONTROL ACTUATOR

(a) Disconnect the connector.

(b) Remove the 3 bolts and disconnect cruise control actuator with the bracket.

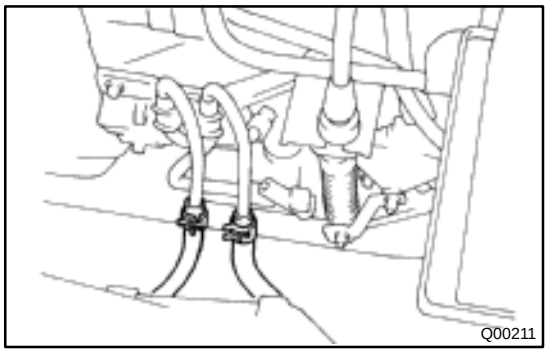

5. DISCONNECT OIL COOLER HOSE

6. DISCONNECT VEHICLE SPEED SENSOR CONNECTOR

7. DISCONNECT PARK/NEUTRAL POSITION SWITCH CONNECTOR

8. DISCONNECT SHIFT SOLENOID VALVE NO.1 AND NO.2 CONNECTOR

9. DISCONNECT SHIFT SOLENOID VALVE SL CONNECTOR

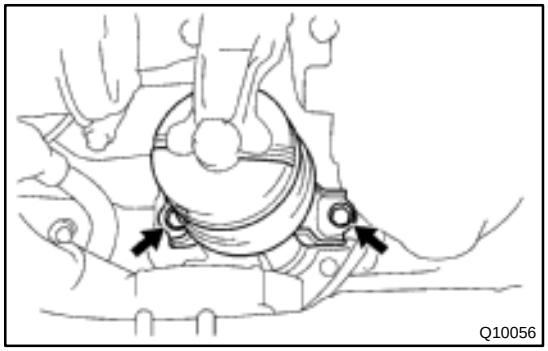

10. REMOVE 2 FRONT SIDE ENGINE MOUNTING BOLTS
Torque:
TMC made: 80 N·m (820 kgf·cm, 59 ft·lbf)
TMMK made:
Green color bolt: 66 N·m (670 kgf·cm, 48 ft·lbf)
Silver color bolt: 44 N·m (450 kgf·cm, 32 ft·lbf)

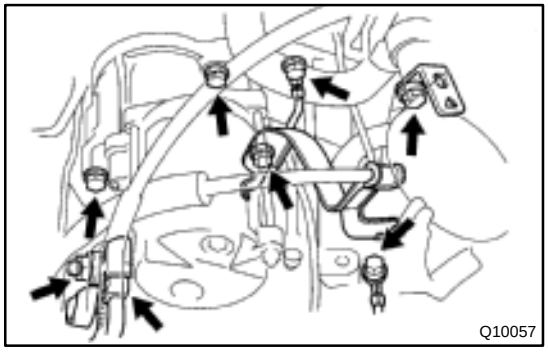

11. DISCONNECT 2 GROUND CABLES

12. REMOVE STARTER

(a) Disconnect the connector and remove the nut.

(b) Remove the 2 bolts, shift cable clamp and starter.
Torque: 39 N·m (400 kgf·cm, 29 ft·lbf)

13. REMOVE 3 TRANSAXLE–TO–ENGINE BOLTS
Torque: 66 N·m (670 kgf·cm, 48 ft·lbf)

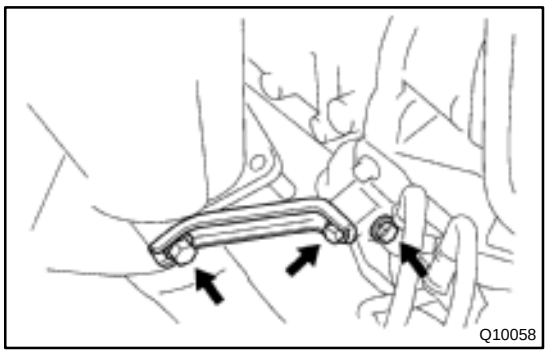

14. REMOVE EXHAUST MANIFOLD STAY

Remove the 2 bolts and exhaust manifold stay.

Torque: 42 N·m (430 kgf·cm, 31 ft·lbf)

15. REMOVE TRANSAXLE–TO–ENGINE BOLT

Torque: 66 N·m (670 kgf·cm, 48 ft·lbf)

16. REMOVE ENGINE HOOD

(a) Disconnect the washer pipe.

(b) Remove the 4 bolts and engine hood.

Torque: 14 N·m (145 kgf·cm, 10 ft·lbf)

17. RAISE AND SUPPORT VEHICLE SECURELY

18. REMOVE FRONT WHEELS

Torque: 103 N·m (1,050 kgf·cm, 76 ft·lbf)

19. REMOVE ENGINE UNDER COVER AND CENTER ENGINE UNDER COVER

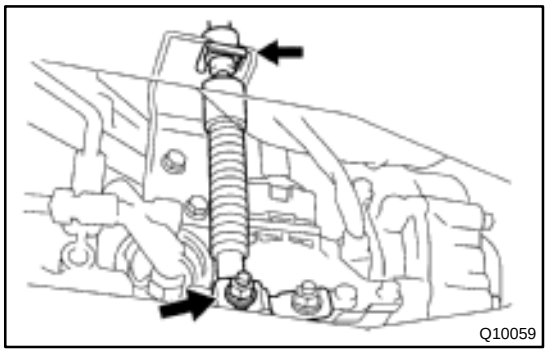

20. DISCONNECT SHIFT CONTROL CABLE

(a) Remove the nut and disconnect the shift control cable from the park/neutral position switch.

Torque: 15 N·m (150 kgf·cm, 11 ft·lbf)

(b) Remove the clip and disconnect the shift control cable from the bracket.

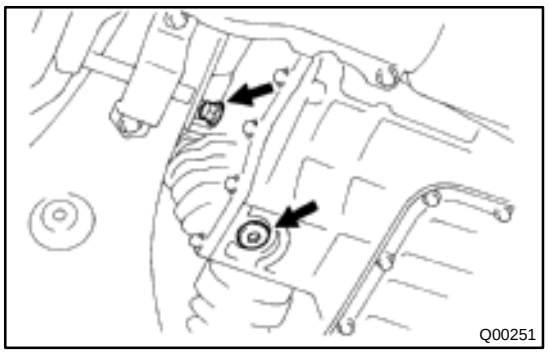

21. REMOVE DIFFERENTIAL FLUID DRAIN PLUG AND GASKET

HINT:

At the time of installation, please refer to the following item.

Replace the used gasket with a new gasket.

22. DRAIN DIFFERENTIAL FLUID

23. REMOVE LH AND RH FENDER APRON SEALS

24. REMOVE LH AND RH DRIVE SHAFTS

(See page SA–17)

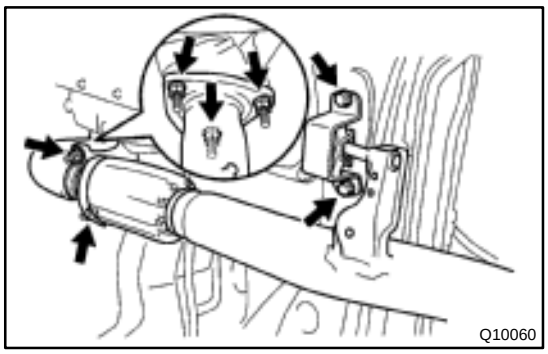

25. REMOVE EXHAUST FRONT PIPE

(a) Remove the 2 nuts and exhaust front pipe clamp.
Torque: 33 N·m (330 kgf·cm, 24 ft·lbf)

(b) Remove the 2 bolts and exhaust pipe No.1 support bracket.
Torque: 33 N·m (330 kgf·cm, 24 ft·lbf)

(c) Remove the 3 nuts.
Torque: 62 N·m (630 kgf·cm, 46 ft·lbf)

HINT:
At the time of installation, please refer to the following item.
Replace the used nuts with new ones.

(d) Remove the 2 bolts, nuts and front exhaust pipe.
Torque: 56 N·m (570 kgf·cm, 41 ft·lbf)

HINT:
At the time of installation, please refer to the following item.
Replace the used nuts with new ones.

(e) Remove the 2 gaskets.

HINT:
At the time of installation, please refer to the following item.
Replace the used gaskets with new ones.

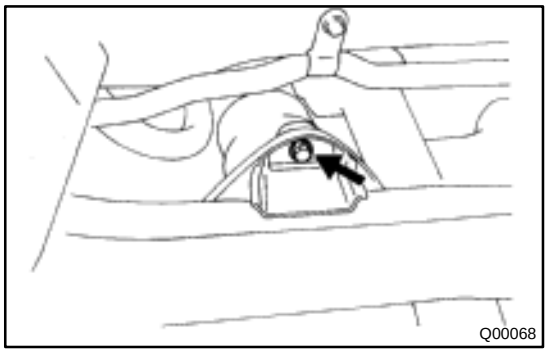

26. REMOVE FRONT SIDE ENGINE MOUNTING INSULATOR BOLT
Torque:
TMC made: 80 N·m (820 kgf·cm, 59 ft·lbf)
TMMK made:
Green color bolt: 66 N·m (670 kgf·cm, 48 ft·lbf)
Silver color bolt: 44 N·m (450 kgf·cm, 32 ft·lbf)

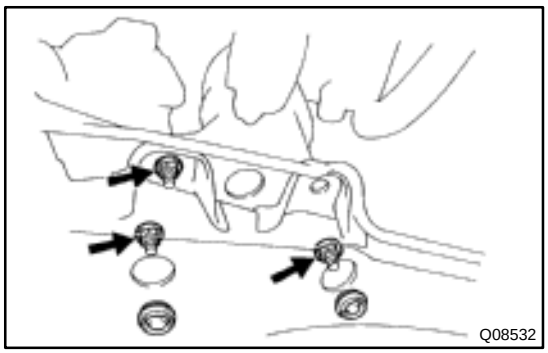

27. REMOVE REAR SIDE ENGINE MOUNTING NUT

(a) Remove the 2 grommets.

(b) Remove the 3 nuts.
Torque: 66 N·m (670 kgf·cm, 48 ft·lbf)

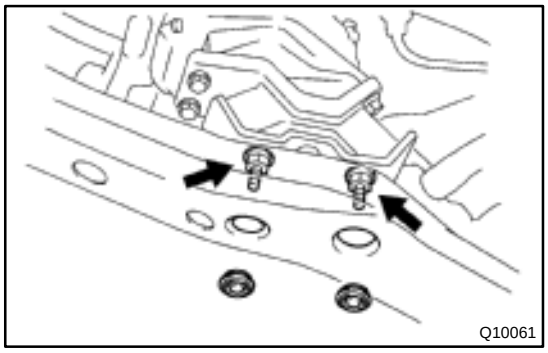

28. REMOVE LEFT SIDE TRANSAXLE MOUNTING NUT

(a) Remove the 2 grommets.

(b) Remove the 2 nuts.
Torque: 80 N·m (820 kgf·cm, 59 ft·lbf)

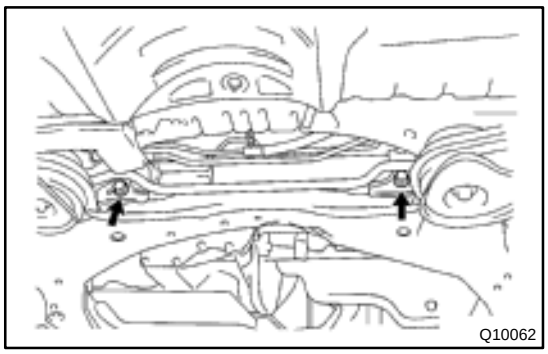

29. REMOVE STEERING GEAR HOUSING

(a) Remove the 4 bolts, LH and RH stabilizer bar brackets and bushings.
Torque:19 N·m (195 kgf·cm, 14 ft·lbf)

(b) Remove the front stabilizer bar. (See page SA–48)

(c) Remove the 2 steering gear housing mounting bolts and nuts.
Torque: 181 N·m (1,850 kgf·cm, 134 ft·lbf)

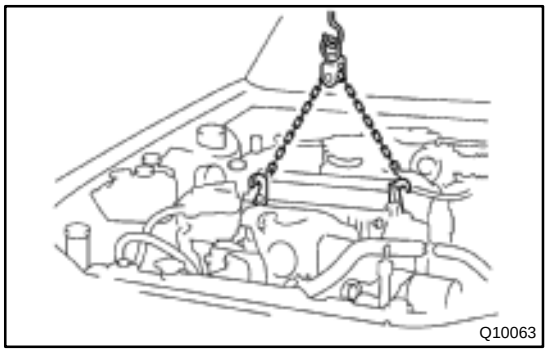

30. TIE STEERING GEAR HOUSING TO REAR ENGINE MOUNTING BRACKET BY CORD OR EQUIVALENT

31. ATTACH ENGINE SLING DEVICE TO ENGINE HANGERS

CAUTION:
Do not attempt to hang the engine by hooking the chain to any other part.

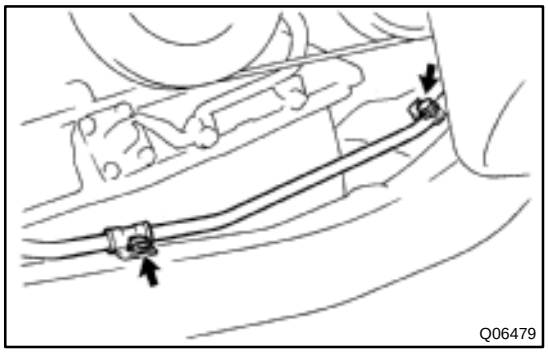

32. REMOVE FRONT FRAME ASSEMBLY

(a) Remove the 2 bolts and steering return pipe mounting brackets.
Torque: 10 N·m (100 kgf·cm, 7 ft·lbf)

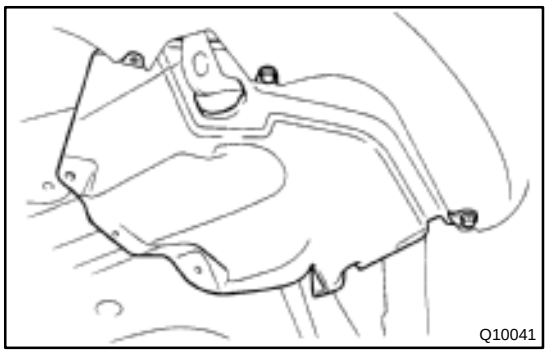

(b) Remove the screws and turn over the front side of the LH and RH fender liners.

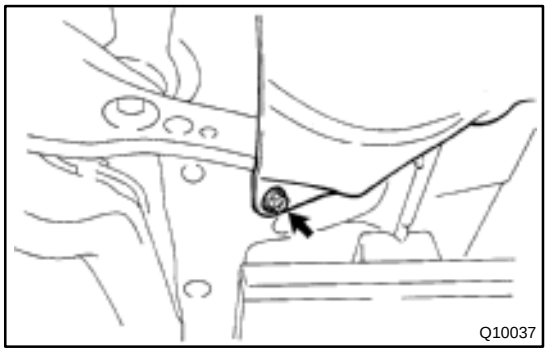

(c) Remove the screws and turn over the rear side of LH and RH fender liners.



(d) Remove the 6 bolts and 4 nuts.
Torque:
19 mm head bolt: 181 N·m (1,850 kgf·cm, 134 ft·lbf)
14 mm head bolt: 32 N·m (330 kgf·cm, 24 ft·lbf)
Nut: 36 N·m (370 kgf·cm, 27 ft·lbf)

(e) Remove the front frame assembly.

33. SUPPORT TRANSAXLE WITH A TRANSMISSION JACK

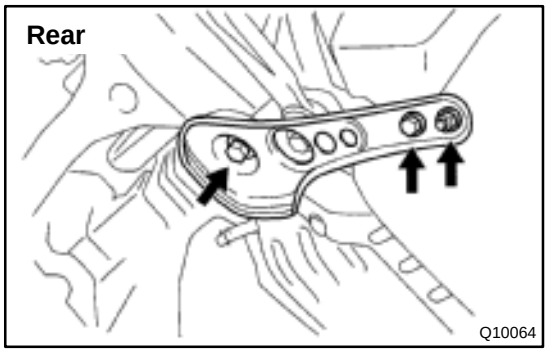

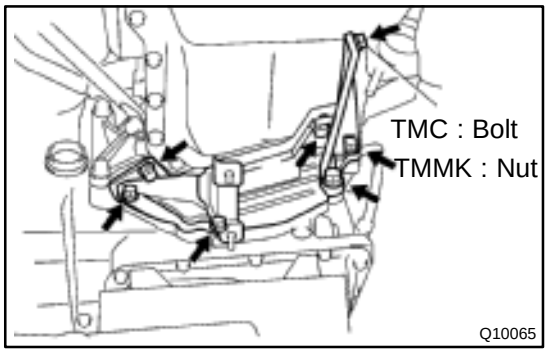

34. REMOVE FRONT SIDE STIFFENER PLATE

TMMK made:

Remove the nut, 2 bolts and stiffener plate.

Torque: 42 N·m (430 kgf·cm, 31 ft·lbf)

TMC made:

Remove the 3 bolts and stiffener plate.

Torque: 42 N·m (430 kgf·cm, 31 ft·lbf)

35. REMOVE REAR END PLATE

(a) Remove the 2 bolts and No.1 exhaust pipe support bracket.
Torque: 19 N·m (195 kgf·cm, 14 ft·lbf)

(b) Remove the 2 bolts and rear end plate with oil pan insulator.
Torque: 25 N·m (250 kgf·cm, 18 ft·lbf)

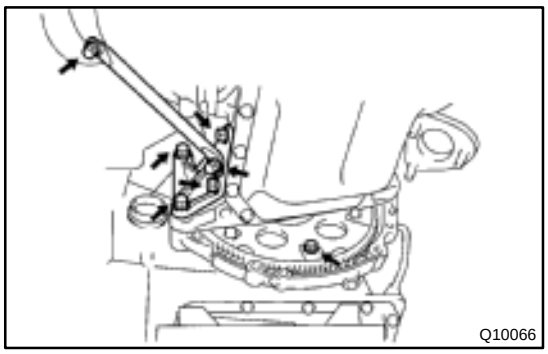

36. REMOVE TORQUE CONVERTER CLUTCH MOUNTING BOLT

Turn the crankshaft to gain access to each bolt, remove the 6 bolts with holding the crankshaft pulley set bolt by a wrench.

Torque: 27 N·m (280 kgf·cm, 20 ft·lbf)

HINT:

At the time of installation, please refer to the following item.

First the install black colored bolt and then the 5 other bolts.

37. REMOVE REAR SIDE STIFFENER PLATE

(a) Remove the 2 bolts and manifold stay.

Torque: 39 N·m (400 kgf·cm, 29 ft·lbf)

(b) Remove the 4 bolts and stiffener plate.

Torque: 39 N·m (400 kgf·cm, 29 ft·lbf)

38. REMOVE TRANSAXLE ASSEMBLY

Separate the transaxle and engine, and lower the transaxle.

AX03I–01

INSTALLATION

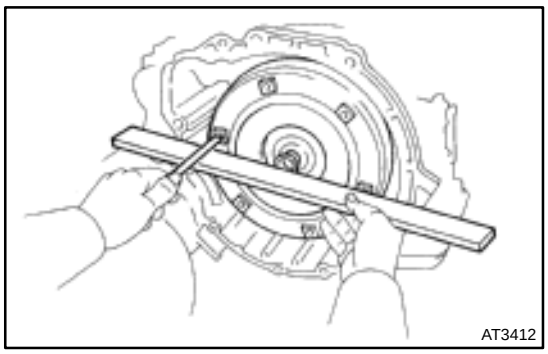
AT3412

1. CHECK TORQUE CONVERTER CLUTCH INSTALLATION

Using a scale and a straight edge, measure to the distance from the installed surface to the transaxle housing.

Correct distance: 13.0 mm (0.512 in.) or more

2. TRANSAXLE INSTALLATION

Installation is in the reverse order of removal (See page AX–19).

HINT:

After installation, check and inspect items as follows.

- Fluid level (See page DI–389)
- Front wheel alignment (See page SA–4)
- Road test of the vehicle
- Engine hood (See page BO–10)

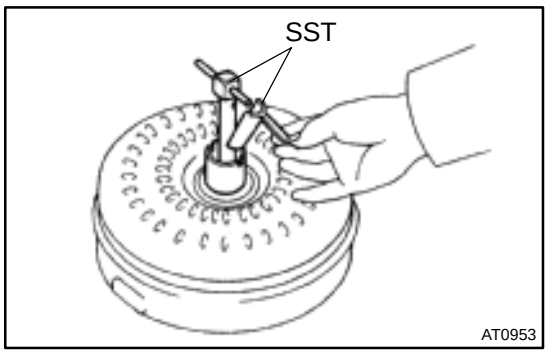

TORQUE CONVERTER CLUTCH AND DRIVE PLATE

AX03J–01

INSPECTION

1. INSPECT ONE–WAY CLUTCH

(a) Install SST into the inner race of the one–way clutch.
SST 09350–32014 (09351–32010)

(b) Install SST so that it fits in the notch of the converter hub and outer race of the one–way clutch.
SST 09350–32014 (09351–32020)

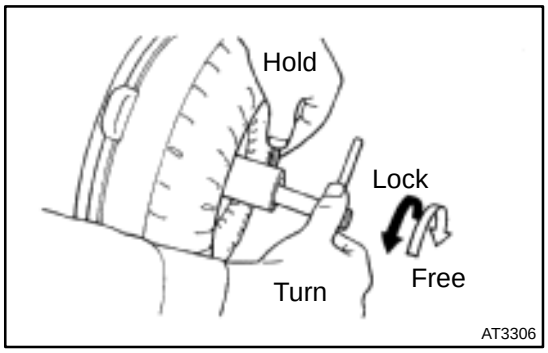

(c) With the torque converter clutch standing on its side,the clutch locks when turned counterclockwise, and rotates freely and smoothly clockwise.

If necessary, clean the converter and retest the clutch. Replace the converter clutch if the clutch still fails the test.

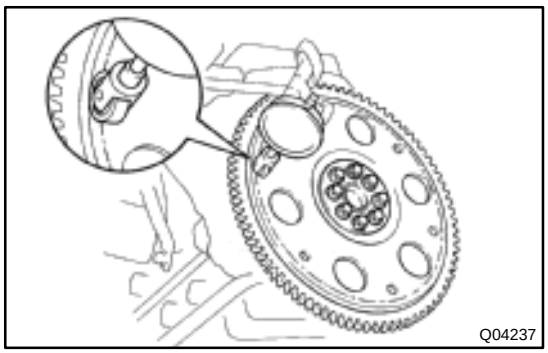

2. MEASURE DRIVE PLATE RUNOUT AND INSPECT RING GEAR

Set up a dial indicator and measure the drive plate runout.

Maximum runout: 0.20 mm (0.0079 in.)

If the runout is not within the specification or if the ring gear is damaged, replace the drive plate. If installing a new drive plate, note the orientation of spacers and tighten the bolts.

Torque: 83 N·m (850 kgf·cm, 61 ft·lbf)

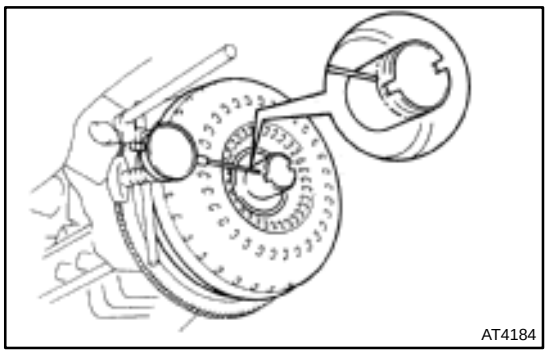

3. MEASURE TORQUE CONVERTER CLUTCH SLEEVE RUNOUT

(a) Temporarily mount the torque converter clutch to the drive plate.

Set up a dial indicator and measure the torque converter clutch sleeve runout.

Maximum runout: 0.30 mm (0.0118 in.)

If the runout is not within the specification, try to correct by reorienting the installation of the torque converter clutch. If excessive runout cannot be corrected, replace the torque converter clutch.

HINT:

Mark the position of the torque converter clutch to ensure the correct installation.

(b) Remove the torque converter clutch.

HOW TO USE THIS MANUAL

IN002–0W

To assist you in finding your way through the manual, the Section Title and major heading are given at the top of every page.

PREPARATION

Preparation lists the SST (Special Service Tools), recommended tools, equipment, lubricant and SSM (Special Service Materials) which should be prepared before beginning the operation and explains the purpose of each one.

REPAIR PROCEDURES

Most repair operations begin with an overview illustration. It identifies the components and shows how the parts fit together.

Example:

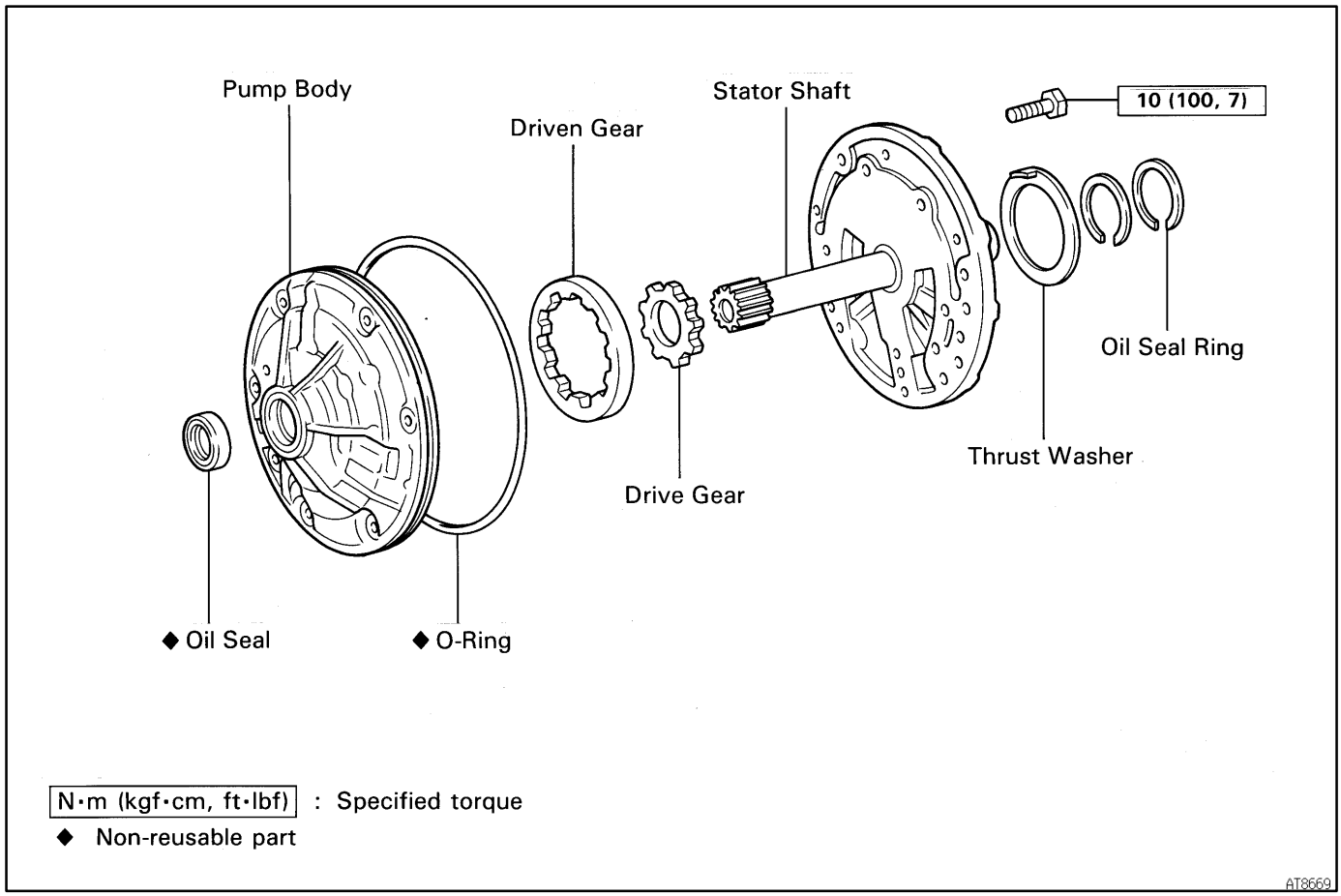

The procedures are presented in a step–by–step format:

- The illustration shows what to do and where to do it.
- The task heading tells what to do.
- The detailed text tells how to perform the task and gives other information such as specifications and warnings.

Example:

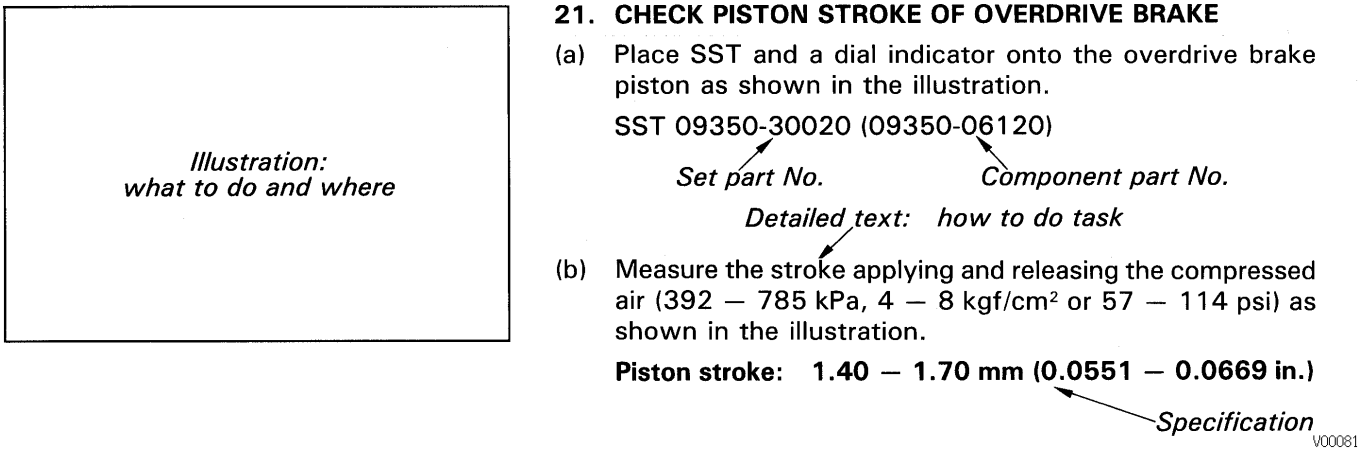

This format provides the experienced technician with a FAST TRACK to the information needed. The upper case task heading can be read at a glance when necessary, and the text below it provides detailed information. Important specifications and warnings always stand out in bold type.

REFERENCES

References have been kept to a minimum. However, when they are required you are given the page to refer to.

SPECIFICATIONS

Specifications are presented in bold type throughout the text where needed. You never have to leave the procedure to look up your specifications. They are also found at the back of AX section, for quick reference.

CAUTIONS, NOTICES, HINTS:

- CAUTIONS are presented in bold type, and indicate there is a possibility of injury to you or other people.
- NOTICES are also presented in bold type, and indicate the possibility of damage to the components being repaired.
- HINTS are separated from the text but do not appear in bold. They provide additional information to help you perform the repair efficiently.

SI UNIT

The UNITS given in this manual are primarily expressed according to the SI UNIT (International System of Unit), and alternately expressed in the metric system and in the English system.

Example:

Torque: 30 N·m (310 kgf·cm, 22 ft·lbf)

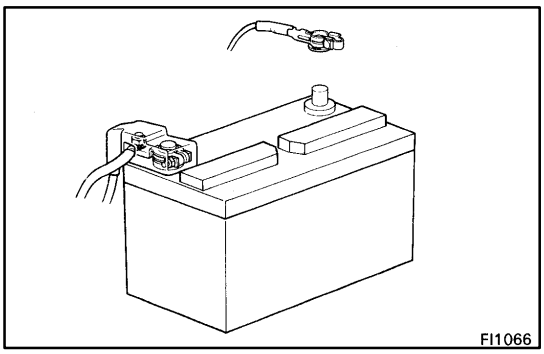
FI1066

GENERAL REPAIR INSTRUCTIONS

IN022–07

1. Use fender, seat and floor covers to keep the vehicle clean and prevent damage.
2. During disassembly, keep parts in the appropriate order to facilitate reassembly.
3. Observe the following:
   (a) Before performing electrical work, disconnect the negative (–) terminal cable from the battery.
   (b) If it is necessary to disconnect the battery for inspection or repair, always disconnect the cable from the negative (–) terminal which is grounded to the vehicle body.
   (c) To prevent damage to the battery terminal post, loosen the terminal nut and raise the cable straight up without twisting or prying it.
   (d) Clean the battery terminal posts and cable terminals with a clean shop rag. Do not scrape them with a file or other abrasive objects.
   (e) Install the cable terminal to the battery post with the nut loose, and tighten the nut after installation. Do not use a hammer to tap the terminal onto the post.
   (f) Be sure the cover for the positive (+) terminal is properly in place.
4. Check hose and wiring connectors to make sure that they are secure and correct.
5. Non–reusable parts
   (a) Always replace cotter pins, gaskets, O–rings and oil seals etc. with new ones.
   (b) Non–reusable parts are indicated in the component illustrations by the "◆" symbol.

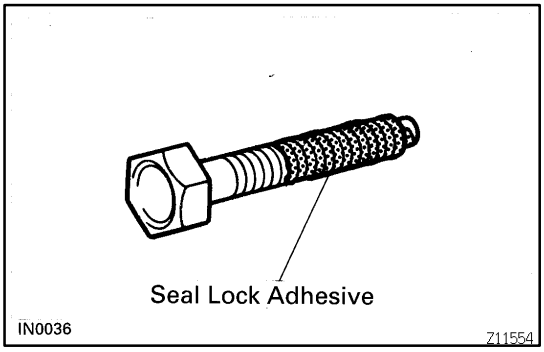

IN0036
Z11554

6. Precoated parts
   Precoated parts are bolts and nuts, etc. that are coated with a seal lock adhesive at the factory.
   (a) If a precoated part is retightened, loosened or caused to move in any way, it must be recoated with the specified adhesive.
   (b) When reusing precoated parts, clean off the old adhesive and dry with compressed air. Then apply

the specified seal lock adhesive to the bolt, nut or threads.

(c) Precoated parts are indicated in the component illustrations by the "• " symbol.

7. When necessary, use a sealer on gaskets to prevent leaks.
8. Carefully observe all specifications for bolt tightening torques. Always use a torque wrench.
9. Use of special service tools (SST) and special service materials (SSM) may be required, depending on the nature of the repair. Be sure to use SST and SSM where specified and follow the proper work procedure. A list of SST and SSM can be found at the preparation of AX section.

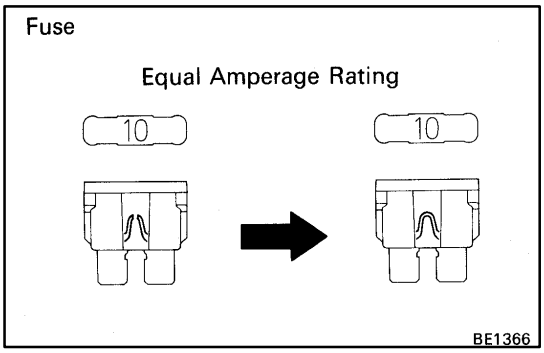

10. When replacing fuses, be sure the new fuse has the correct amperage rating. DO NOT exceed the rating or use one with a lower rating.

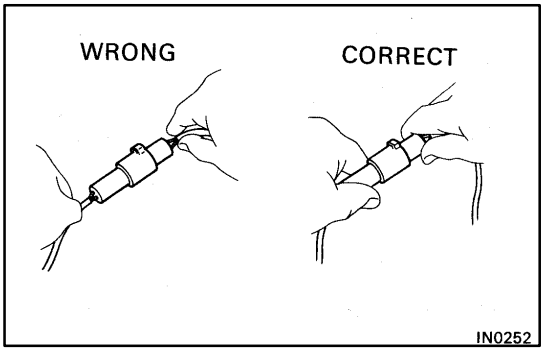

11. To pull apart electrical connectors, pull on the connector itself, not the wires.
12. Care must be taken when jacking up and supporting the vehicle. Be sure to lift and support the vehicle at the proper locations.
    (a) If the vehicle is to be jacked up only at the front or rear end, be sure to block the wheels at the opposite end in order to ensure safety.
    (b) After the vehicle is jacked up, be sure to support it on stands. It is extremely dangerous to do any work on a vehicle raised on a jack alone, even for a small job that can be finished quickly.

GLOSSARY OF SAE AND TOYOTA TERMS

IN016–02

This glossary lists all SAE–J1930 terms and abbreviations used in this manual in compliance with SAE recommendations, as well as their Toyota equivalents.

SAE ABBREVIATIONS	SAE TERMS	TOYOTA TERMS ( )—ABBREVIATIONS
A/C	Air Conditioning	Air Conditioner
ACL	Air Cleaner	Air Cleaner
AIR	Secondary Air Injection	Air Injection (AI)
AP	Accelerator Pedal	–
B+	Battery Positive Voltage	+B, Battery Voltage
BARO	Barometric Pressure	–
CAC	Charge Air Cooler	Intercooler
CARB	Carburetor	Carburetor
CFI	Continuous Fuel Injection	–
CKP	Crankshaft Position	Crank Angle
CL	Closed Loop	Closed Loop
CMP	Camshaft Position	Cam Angle
CPP	Clutch Pedal Position	–
CTOX	Continuous Trap Oxidizer	–
CTP	Closed Throttle Position	–
DFI	Direct Fuel Injection (Diesel)	Direct Injection (DI)
DI	Distributor Ignition	–
DLC1 DLC2 DLC3	Data Link Connector 1 Data Link Connector 2 Data Link Connector 3	1: Check Connector 2: Toyota Diagnosis Communication Link (TDCL) 3: OBD@@@@@: [g 2] Diagnostic Connector
DTC	Diagnostic Trouble Code	Diagnostic Code
DTM	Diagnostic Test Mode	–
ECL	Engine Control Level	–
ECM	Engine Control Module	Engine ECU (Electronic Control Unit)
ECT	Engine Coolant Temperature	Coolant Temperature, Water Temperature (THW)
EEPROM	Electrically Erasable Programmable Read Only Memory	Electrically Erasable Programmable Read Only Memory (EEPROM), Erasable Programmable Read Only Memory (EPROM)
EFE	Early Fuel Evaporation	Cold Mixture Heater (CMH), Heat Control Valve (HCV)
EGR	Exhaust Gas Recirculation	Exhaust Gas Recirculation (EGR)
EI	Electronic Ignition	Toyota Distributorless Ignition (TDI)
EM	Engine Modification	Engine Modification (EM)
EPROM	Erasable Programmable Read Only Memory	Programmable Read Only Memory (PROM)
EVAP	Evaporative Emission	Evaporative Emission Control (EVAP)
FC	Fan Control	–
FEEPROM	Flash Electrically Erasable Programmable Read Only Memory	–
FEPROM	Flash Erasable Programmable Read Only Memory	–
FF	Flexible Fuel	–
FP	Fuel Pump	Fuel Pump
GEN	Generator	Alternator
GND	Ground	Ground (GND)
HO2S	Heated Oxygen Sensor	Heated Oxygen Sensor (HO2S)

IAC	Idle Air Control	Idle Speed Control (ISC)
IAT	Intake Air Temperature	Intake or Inlet Air Temperature
ICM	Ignition Control Module	–
IFI	Indirect Fuel Injection	Indirect Injection
IFS	Inertia Fuel–Shutoff	–
ISC	Idle Speed Control	–
KS	Knock Sensor	Knock Sensor
MAF	Mass Air Flow	Air Flow Meter
MAP	Manifold Absolute Pressure	Manifold Pressure Intake Vacuum
MC	Mixture Control	Electric Bleed Air Control Valve (EBCV) Mixture Control Valve (MCV) Electric Air Control Valve (EACV)
MDP	Manifold Differential Pressure	–
MFI	Multiport Fuel Injection	Electronic Fuel Injection (EFI)
MIL	Malfunction Indicator Lamp	Check Engine Light
MST	Manifold Surface Temperature	–
MVZ	Manifold Vacuum Zone	–
NVRAM	Non–Volatile Random Access Memory	–
O2S	Oxygen Sensor	Oxygen Sensor, O_2 Sensor (O_2S)
OBD	On–Board Diagnostic	On–Board Diagnostic (OBD)
OC	Oxidation Catalytic Converter	Oxidation Catalyst Converter (OC), CCo
OP	Open Loop	Open Loop
PAIR	Pulsed Secondary Air Injection	Air Suction (AS)
PCM	Powertrain Control Module	–
PNP	Park/Neutral Position	–
PROM	Programmable Read Only Memory	–
PSP	Power Steering Pressure	–
PTOX	Periodic Trap Oxidizer	Diesel Particulate Filter (DPF) Diesel Particulate Trap (DPT)
RAM	Random Access Memory	Random Access Memory (RAM)
RM	Relay Module	–
ROM	Read Only Memory	Read Only Memory (ROM)
RPM	Engine Speed	Engine Speed
SC	Supercharger	Supercharger
SCB	Supercharger Bypass	–
SFI	Sequential Multiport Fuel Injection	Electronic Fuel Injection (EFI), Sequential Injection
SPL	Smoke Puff Limiter	–
SRI	Service Reminder Indicator	–
SRT	System Readiness Test	–
ST	Scan Tool	–
TB	Throttle Body	Throttle Body
TBI	Throttle Body Fuel Injection	Single Point Injection Central Fuel Injection (Ci)
TC	Turbocharger	Turbocharger
TCC	Torque Converter Clutch	Torque Converter
TCM	Transmission Control Module	Transmission ECU (Electronic Control Unit)
TP	Throttle Position	Throttle Position
TR	Transmission Range	–

TVV	Thermal Vacuum Valve	Bimetallic Vacuum Switching Valve (BVSV) Thermostatic Vacuum Switching Valve (TVSV)
TWC	Three–Way Catalytic Converter	Three–Way Catalyst (TWC) CC_{RO}
TWC+OC	Three–Way + Oxidation Catalytic Converter	CC_R + CCo
VAF	Volume Air Flow	Air Flow Meter
VR	Voltage Regulator	Voltage Regulator
VSS	Vehicle Speed Sensor	Vehicle Speed Sensor (Read Switch Type)
WOT	Wide Open Throttle	Full Throttle
WU–OC	Warm Up Oxidation Catalytic Converter	–
WU–TWC	Warm Up Three–Way Catalytic Converter	Manifold Converter
3GR	Third Gear	–
4GR	Fourth Gear	–

ABBREVIATIONS USED IN THIS MANUAL

IN01H–0R

ATF	Automatic Transaxle Fluid
B_0	Overdrive Brake
B_1	Second coast Brake
B_2	Second Brake
B_3	First and Reverse Brake
C_0	Overdrive Direct Clutch
C_1	Forward Clutch
C_2	Direct Clutch
D	Disc
F	Flange
F_0	O/D One–way Clutch
F_1	No.1 One–way Clutch
F_2	No.2 One–way Clutch
MP	Multipurpose
O/D	Overdirve
P	Plate
SSM	Special Service Materials
SST	Special Service Tools

STANDARD BOLT TORQUE SPECIFICATIONS

IN008–02

HOW TO DETERMINE BOLT STRENGTH

	Mark	Class		Mark	Class
Hexagon head bolt	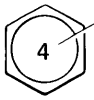 Bolt head No. 4— 5— 6— 7— 8— 9— 10— 11—	4T 5T 6T 7T 8T 9T 10T 11T	Stud bolt	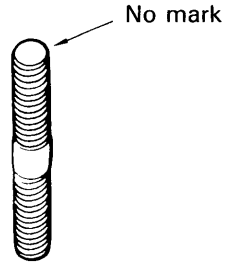 No mark	4T
	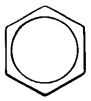 No mark	4T		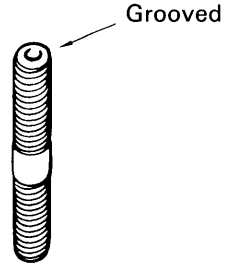 Grooved	6T
Hexagon flange bolt w/ washer hexagon bolt	 No mark	4T			
Hexagon head bolt	 2 protruding lines	5T			
Hexagon flange bolt w/ washer hexagon bolt	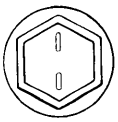 2 protruding lines	6T	Welded bolt	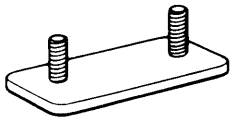	4T
Hexagon head bolt	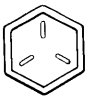 3 protruding lines	7T			
Hexagon head bolt	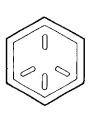 4 protruding lines	8T			

V00078

SPECIFIED TORQUE FOR STANDARD BOLTS

Class	Diameter mm	Pitch mm	Specified torque					
			Hexagon head bolt			Hexagon flange bolt		
			N·m	kgf·cm	ft·lbf	N·m	kgf·cm	ft·lbf
4T	6	1	5	55	48 in.·lbf	6	60	52 in.·lbf
	8	1.25	12.5	130	9	14	145	10
	10	1.25	26	260	19	29	290	21
	12	1.25	47	480	35	53	540	39
	14	1.5	74	760	55	84	850	61
	16	1.5	115	1,150	83	–	–	–
5T	6	1	6.5	65	56 in.·lbf	7.5	75	65 in.·lbf
	8	1.25	15.5	160	12	17.5	175	13
	10	1.25	32	330	24	36	360	26
	12	1.25	59	600	43	65	670	48
	14	1.5	91	930	67	100	1,050	76
	16	1.5	140	1,400	101	–	–	–
6T	6	1	8	80	69 in.·lbf	9	90	78 in.·lbf
	8	1.25	19	195	14	21	210	15
	10	1.25	39	400	29	44	440	32
	12	1.25	71	730	53	80	810	59
	14	1.5	110	1,100	80	125	1,250	90
	16	1.5	170	1,750	127	–	–	–
7T	6	1	10.5	110	8	12	120	9
	8	1.25	25	260	19	28	290	21
	10	1.25	52	530	38	58	590	43
	12	1.25	95	970	70	105	1,050	76
	14	1.5	145	1,500	108	165	1,700	123
	16	1.5	230	2,300	166	–	–	–
8T	8	1.25	29	300	22	33	330	24
	10	1.25	61	620	45	68	690	50
	12	1.25	110	1,100	80	120	1,250	90
9T	8	1.25	34	340	25	37	380	27
	10	1.25	70	710	51	78	790	57
	12	1.25	125	1,300	94	140	1,450	105
10T	8	1.25	38	390	28	42	430	31
	10	1.25	78	800	58	88	890	64
	12	1.25	140	1,450	105	155	1,600	116
11T	8	1.25	42	430	31	47	480	35
	10	1.25	87	890	64	97	990	72
	12	1.25	155	1,600	116	175	1,800	130

DESCRIPTION

GENERAL SPECIFICATIONS

AX0CH–05

Type of Transaxle		A541E
Type of Engine		1MZ–FE
Torque Converter Clutch Stall Torque Ratio		1.8 : 1
Torque Converter Clutch Lock–up Mechanism		Equipped
Gear Ratio	1st Gear	2.810
	2nd Gear	1.549
	3rd Gear	1.000
	O/D Gear	0.735
	Reverse Gear	2.296
Transaxle	Number of Discs and Plates	
	O/D Direct Clutch (C_0)	2 / 2
	Forward Clutch (C_1)	5 / 5
	Direct Clutch (C_2)	3 / 3
	2nd Brake (B_2)	3 / 3
	First and Reverse Brake (B_3)	6 / 6
	O/D Brake (B_0)	3 / 3
B_1 Band Width	mm (in.)	25 (0.98)
ATF Type		ATF D–@@@@@: [g 2] or DEXRON®@@@@@: [g 3](DEXRON®@@@@@: [g 2])
Capacity liter (US qts, Imp.qts)	A/T	6.75(7.1, 5.9)
	D/F	0.85 (0.9, 0.7)

OPERATION

1. MECHANICAL OPERATION

AX0RF–01

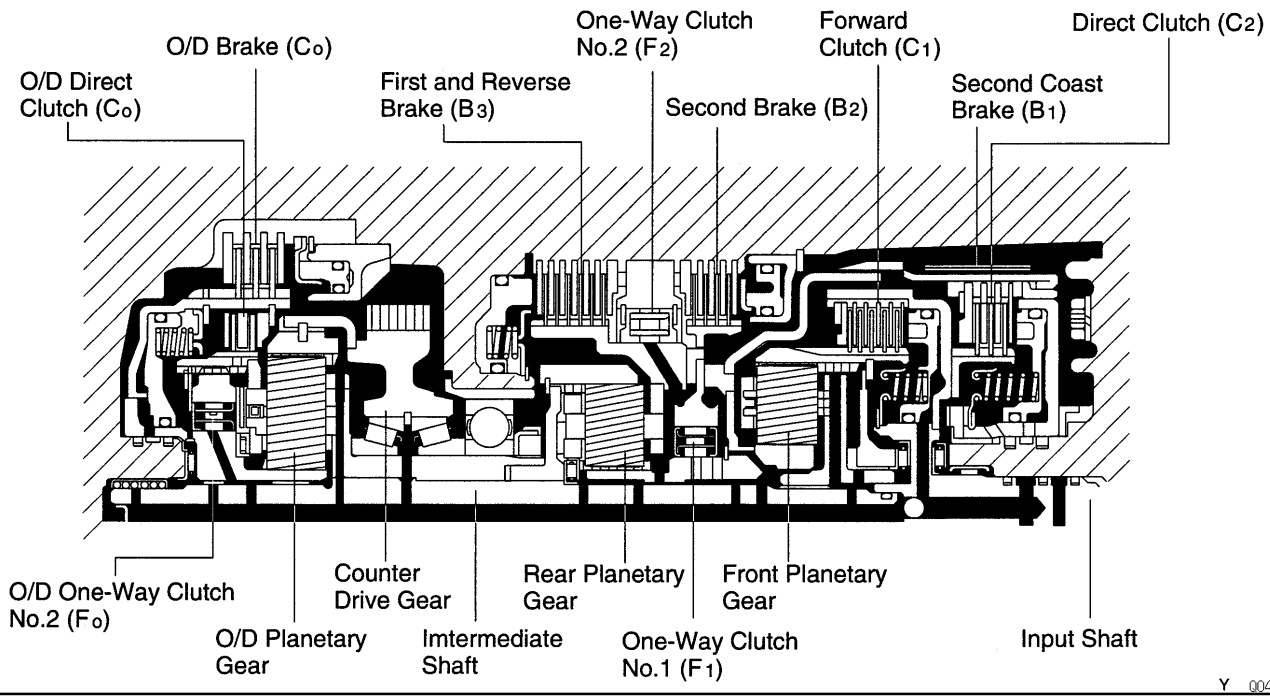

○ ..... Operating

Shift lever position	Gear Position	C_0	C_1	C_2	B_0	B_1	B_2	B_3	F_0	F_1	F_2
P	Parking	○									
R	Reverse	○		○				○			
N	Neutral	○									
D	1st	○	○						○		○
	2nd	○	○				○		○	○	
	3rd	○	○	○			○		○		
	O/D		○	○	○		○				
2	1st	○	○						○		○
	2nd	○	○			○	○		○	○	
	*3rd	○	○	○			○		○		
L	1st	○	○					○	○		○
	*2nd	○	○			○	○		○	○	

*Down-shift only – no up-shift

V04753

AX019–03

2. FUNCTION OF COMPONENTS

COMPONENT		FUNCTION
Forward Clutch	C_1	Connects input shaft and front planetary ring gear
Direct Clutch	C_2	Connects input shaft and front & rear planetary sun gear
2nd Coast Brake	B_1	Prevents front & rear planetary sun gear from turning either clockwise or counterclockwise
2nd Brake	B_2	Prevents outer race of F_1 from turning either clockwise or counterclockwise, thus preventing front & rear planetary sun gear from turning counterclockwise
1st & Reverse Brake	B_3	Prevents rear planetary carrier from turning either clockwise or counterclockwise
No.1 One-Way Clutch	F_1	When B_2 is operating, prevents front & rear planetary sun gear from turning counterclockwise
No.2 One-Way Clutch	F_2	Prevents rear planetary carrier from turning counterclockwise
O/D Direct Clutch	C_0	Connects overdrive sun gear and overdrive planetary carrier
O/D Brake	B_0	Prevents overdrive sun gear from turning either clockwise or counterclockwise
O/D One-Way Clutch	F_0	When transaxle is being driven by engine, connects overdrive sun gear and overdrive carrier
Planetary Gears		These gears change the route through which driving force is transmitted in accordance with the operation of each clutch and brake in order to increase or reduce the input and output speed

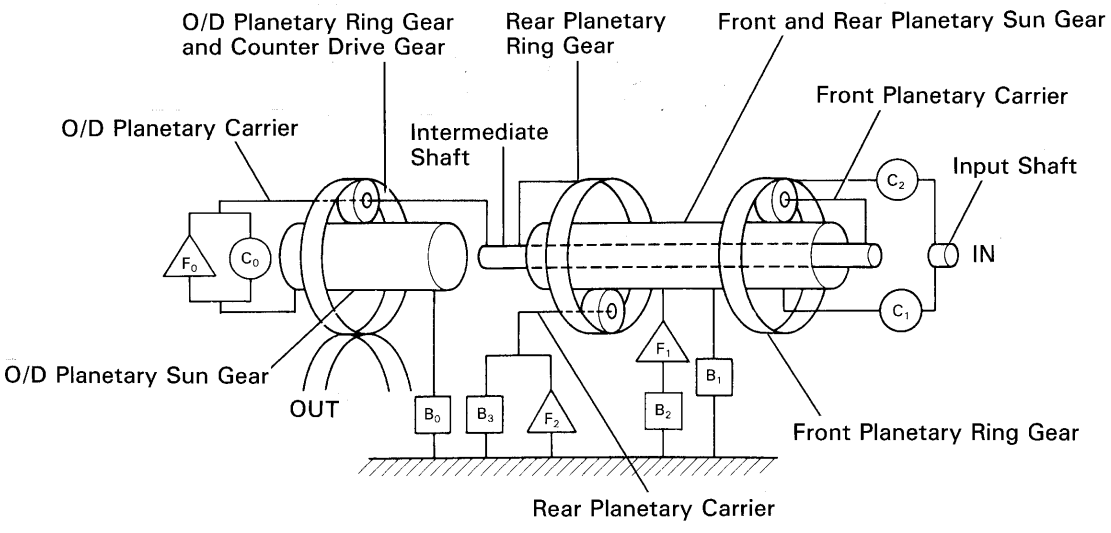

AT3207

V02267

Power from the engine transmitted to the input shaft via the torque converter clutch is then transmitted to the planetary gears by the operation of the clutch.
By operation of the brake and one–way clutch, either the planetary carrier or the planetary sun gear are immobilized, altering the speed of revolution of the planetary gear unit.
Shift change is carried out by altering the combination of clutch and brake operation.
Each clutch and brake operates by hydraulic pressure; gear position is decided according to the throttle opening angle and vehicle speed, and shift change automatically occurs.
The conditions of operation for each gear position are shown on the following illustrations:

D or 2 Position 1st Gear

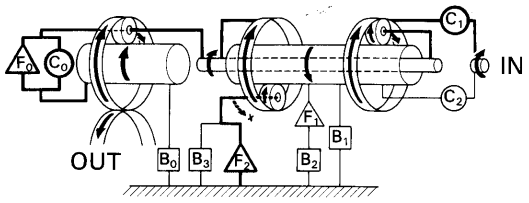

AT1097

2 Position 2nd Gear

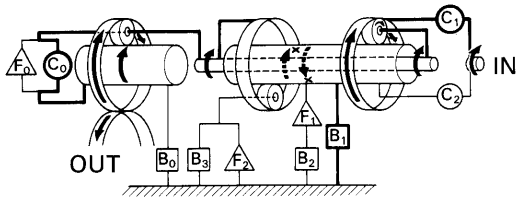

AT1102

D Position 2nd Gear

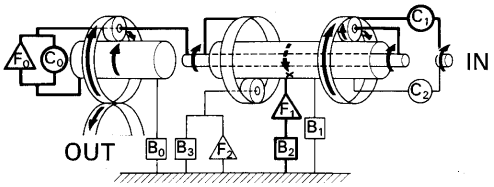

AT1098

L Position 1st Gear

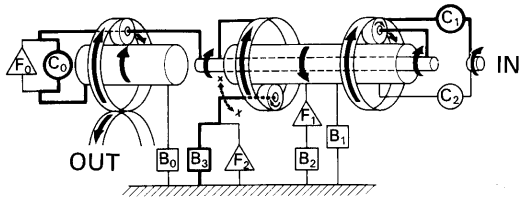

AT1103

D Position 3rd Gear

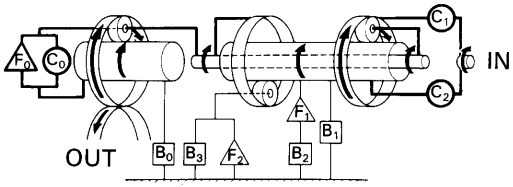

AT1099

R Position Reverse Gear

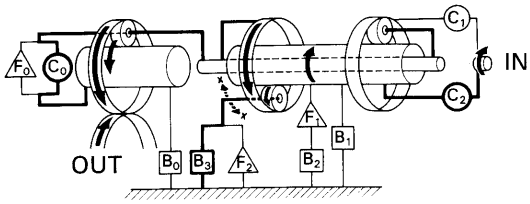

AT1101

D Position O/D Gear

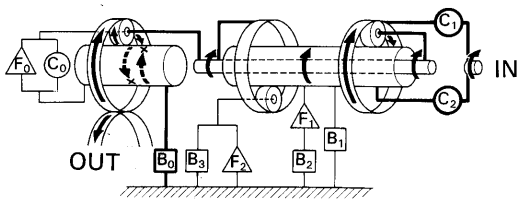

AT1100

V02268

AX01A–0B

3. HYDRAULIC CONTROL SYSTEM

The hydraulic control system is composed of the oil pump, the valve body, the solenoid valves, the accumulators, the clutches and brakes as well as the fluid passages which connect all of these components. Based on the hydraulic pressure created by the oil pump, the hydraulic control system governs the hydraulic pressure acting on the torque converter clutch, clutches and brakes in accordance with the vehicle driving conditions.

There are three solenoid valves on the valve body.

The No.1 and No.2 solenoid vales are turned on and off by signals from the ECM to operate the shift valves and change the gear shift position.

The SL solenoid valve is operated by signals from the ECM to engage or disengage the lock–up clutch of the torque converter clutch.

The SLN solenoid valve is operated by signals from the ECM to control the engagement speed and reduce gear shift shock.

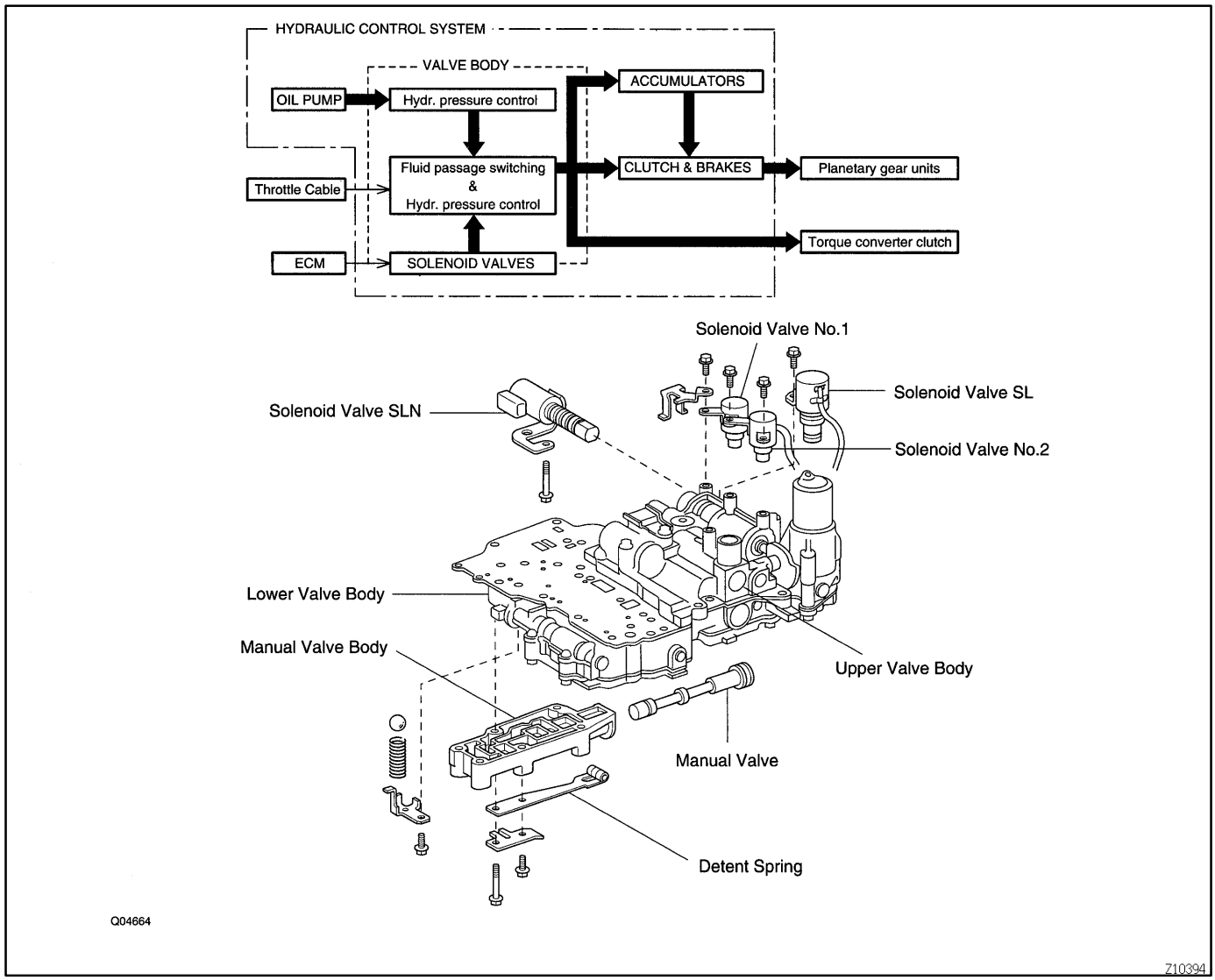

PREPARATION

SST (SPECIAL SERVICE TOOLS)

AX02L–06

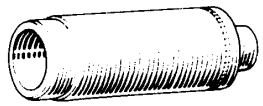	09226–10010	Crankshaft Front & Rear Bearing Replacer	Install RH retainer oil seal
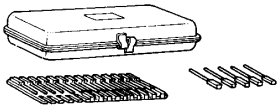	09240–00020	Wire Gauge Set	
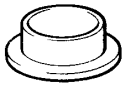	09316–20011	Transfer Bearing Replacer	
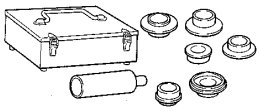	09316–60011	Transmission & Transfer Bearing Replacer	
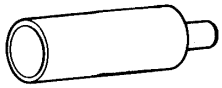	(09316–00011)	Replacer Pipe	
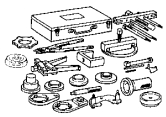	09350–32014	TOYOTA Automatic Transmission Tool Set	
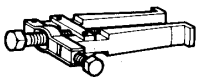	09308–10010	Oil Seal Puller	
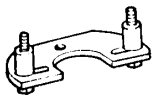	(09351–32032)	Counter Driven Gear Holding Tool	
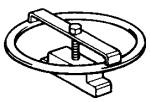	(09351–32040)	No.1 Piston Spring Compressor	
	(09351–32050)	Snap Ring Expander	
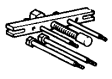	(09351–32061)	Oil Pump Puller	
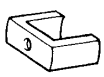	(09351–32070)	No.2 Piston Spring Compressor	
	(09351–32080)	Lock Nut Wrench	

	(09351–32100)	Drive Pinion Bearing Replacer	
	(09351–32120)	Overdrive Bearing Replacer	
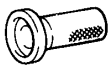	(09351–32140)	Oil Seal Replacer	
	(09351–32150)	Oil Seal Replacer	
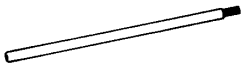	(09351–32190)	Measure Terminal	
	(09351–32200)	No.3 Piston Spring Compressor	
	09608–16011	Rear Hub Bearing Tool–	Remove differential side bearing
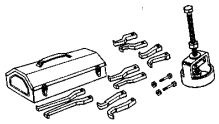	09612–65014	Steering Worm Bearing Puller	Remove pinion shaft bearing outer race
	09950–40010	Puller B Set	

AX02M–02

RECOMMENDED COOL

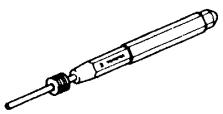	09031–00030	Pin Punch .	

AX02N–02

EQUIPMENT

Feeler gauge	Check major clearance.
Vernier calipers	Check length of second coast brake piston rod.
Dial indicator with magnetic base	Check piston stroke and end play of the output shaft.
Dial indicator	Check inside diameter of major bushing.
Straight edge	Check side clearance of oil pump.
Torque wrench	

AX01V–08

LUBRICANT

Item	Capacity	Classification
Automatic transaxle fluid: Dry fill Drain and refill	 6.75 liters (7.10 US qts, 5.94 Imp.qts) 2.5 liters (2.6 US qts, 2.2 Imp.qts)	ATF D–@@@@@: [g 2] or DEXRON®@@@@@: [g 3](DEXRON®@@@@@: [g 2])
Differential oil	0.85 liters (0.89 US qts, 0.75 Imp.qts)	ATF D–@@@@@: [g 2] or DEXRON®@@@@@: [g 3](DEXRON®@@@@@: [g 2])

AX02P–02

SSM (SPECIAL SERVICE MATERIALS)

08826–00090	Seal Packing 1281, THREE BOND 1281 or equivalent (FIPG)	Differential LH bearing retainer Differential RH retainer
08833–00070	Adhesive 1324, THREE BOND 1324 or equivalent	Differential RH retainer set bolt

COMPONENT PARTS REMOVAL

AX02Q–02

COMPONENTS

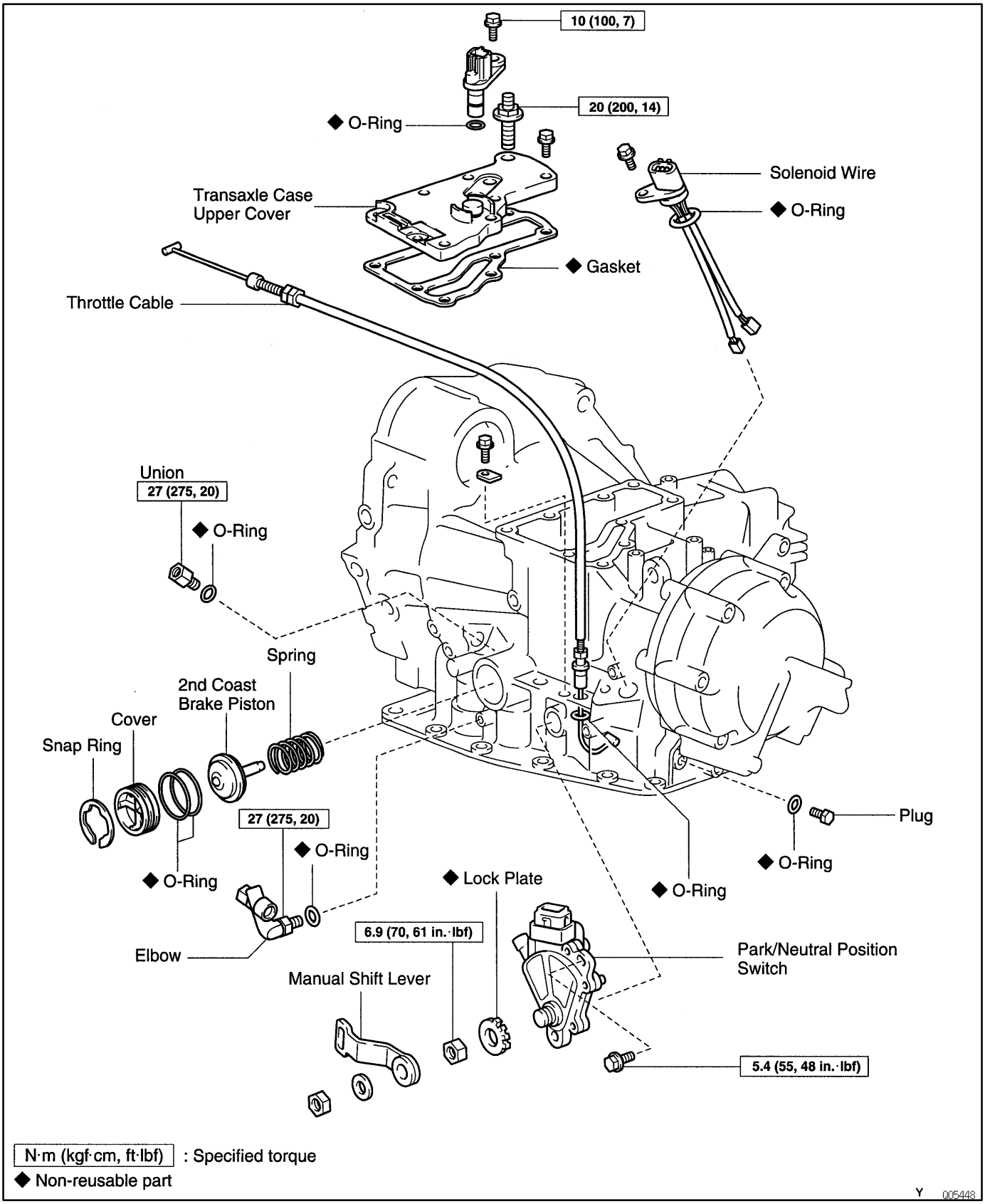

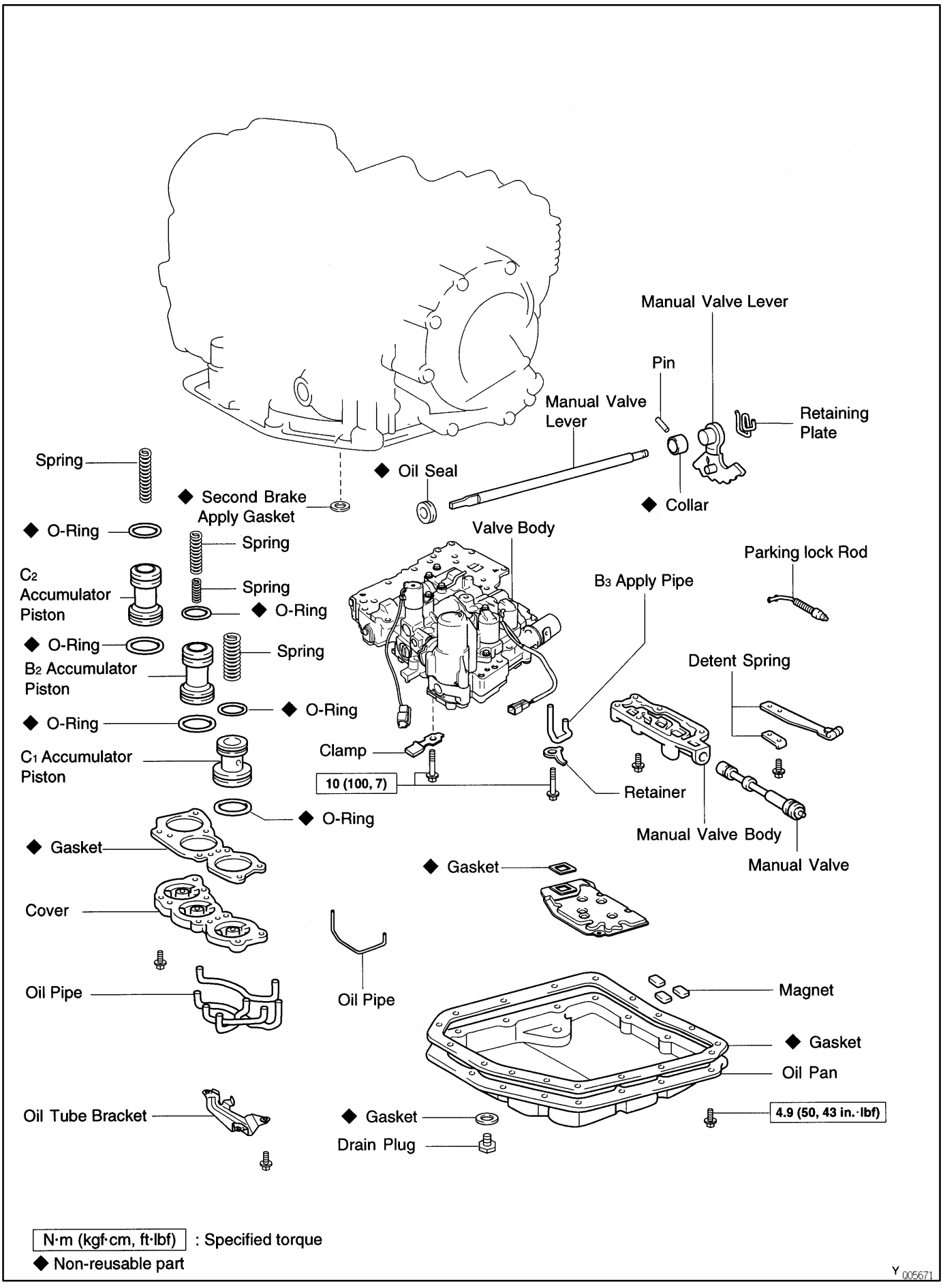
Manual Valve Lever
Pin
Manual Valve Lever
Retaining Plate
Collar
Spring
◆ Oil Seal
◆ Second Brake Apply Gasket
◆ O-Ring
Spring
Valve Body
Parking lock Rod
C2 Accumulator Piston
Spring
◆ O-Ring
B3 Apply Pipe
◆ O-Ring
B2 Accumulator Piston
Spring
Detent Spring
◆ O-Ring
◆ O-Ring
C1 Accumulator Piston
Clamp
10 (100, 7)
Retainer
Manual Valve Body
Manual Valve
◆ O-Ring
◆ Gasket
◆ Gasket
Cover
Oil Pipe
Oil Pipe
Magnet
◆ Gasket
Oil Pan
Oil Tube Bracket
◆ Gasket
Drain Plug
4.9 (50, 43 in.·lbf)
N·m (kgf·cm, ft·lbf) : Specified torque
◆ Non-reusable part
Y 005671

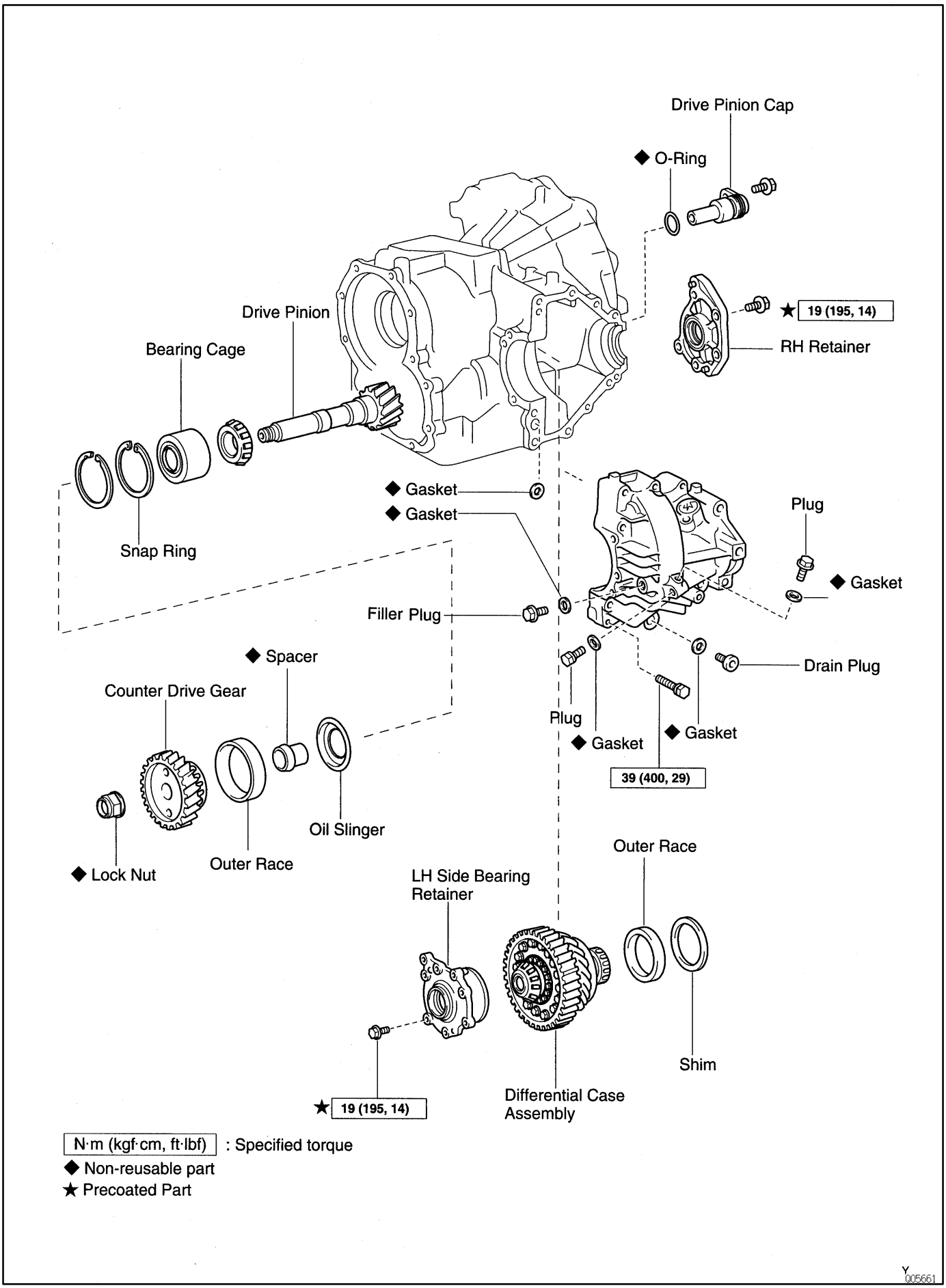
Drive Pinion Cap
◆ O-Ring
★ 19 (195, 14)
RH Retainer
Drive Pinion
Bearing Cage
Snap Ring
◆ Gasket
◆ Gasket
Plug
◆ Gasket
Filler Plug
Drain Plug
◆ Spacer
Counter Drive Gear
Plug
◆ Gasket
◆ Gasket
39 (400, 29)
Oil Slinger
Outer Race
◆ Lock Nut
Outer Race
LH Side Bearing Retainer
Shim
★ 19 (195, 14)
Differential Case Assembly
N·m (kgf·cm, ft·lbf) : Specified torque
◆ Non-reusable part
★ Precoated Part
Y005661

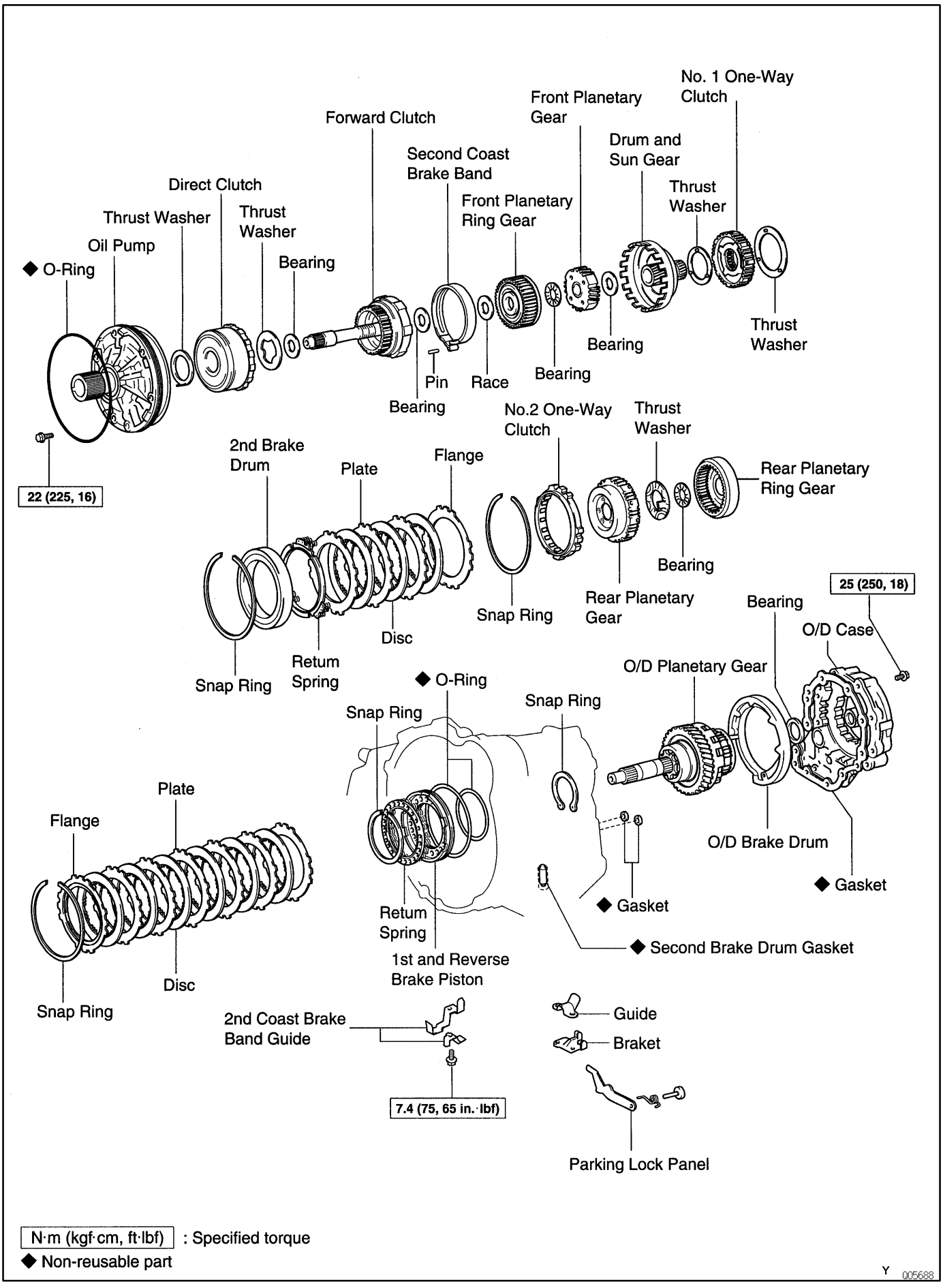

N·m (kgf·cm, ft·lbf) : Specified torque

◆ Non-reusable part

Y 005688

AX0TT–02

SEPARATE BASIC SUBASSEMBLY

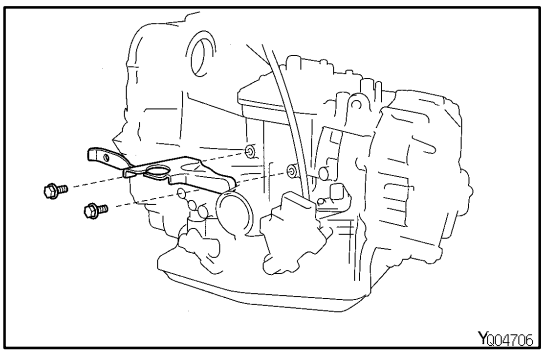

1. REMOVE SHIFT CONTROL CABLE BRACKET

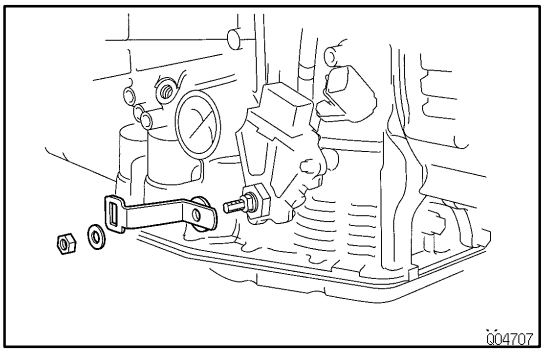

2. REMOVE UNION AND ELBOW

(a) Remove the manual shift lever.

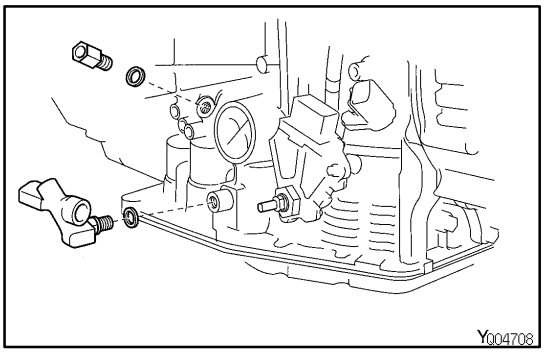

(b) Using a open end wrench, remove the union and elbow.
(c) Remove the O–rings from the union and elbow.

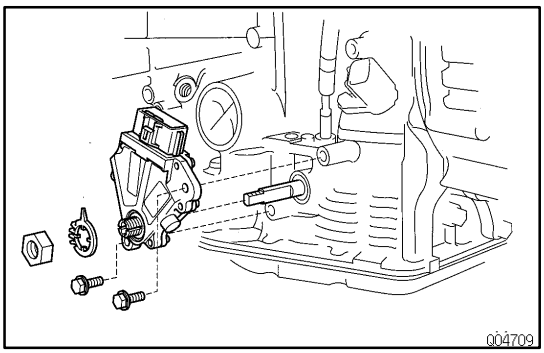

3. REMOVE PARK/NEUTRAL POSITION SWITCH

(a) Pry off the lock washer and remove the manual valve shaft nut.
(b) Remove the 2 bolts and pull out the park/neutral position switch.

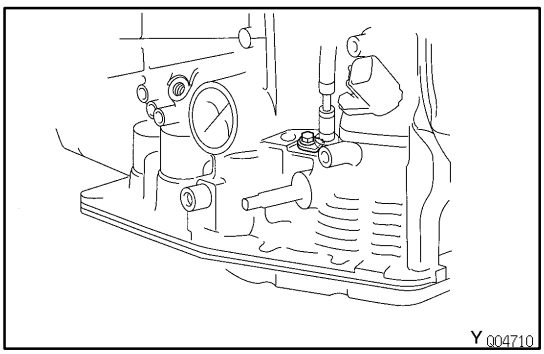

4. REMOVE THROTTLE CABLE RETAINING BOLT AND PLATE

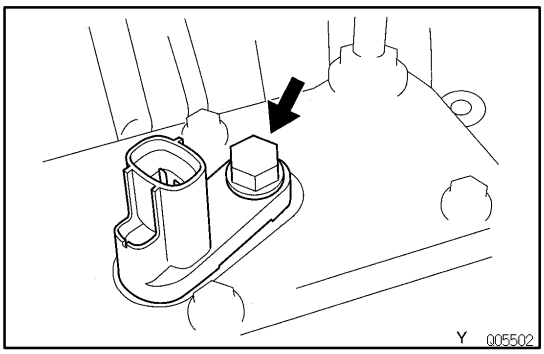

5. REMOVE T/M REVOLUTION SENSOR

(a) Remove the bolt and T/M revolution sensor.

(b) Remove the O–ring from the T/M revolution sensor.

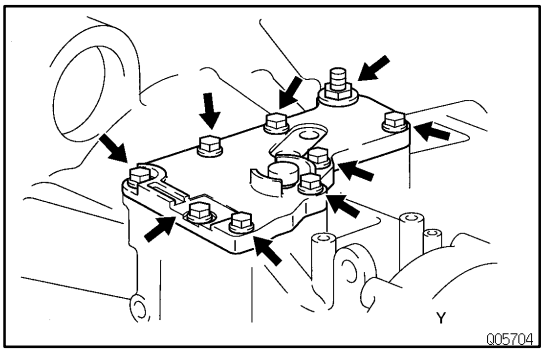

6. REMOVE TRANSAXLE CASE UPPER COVER

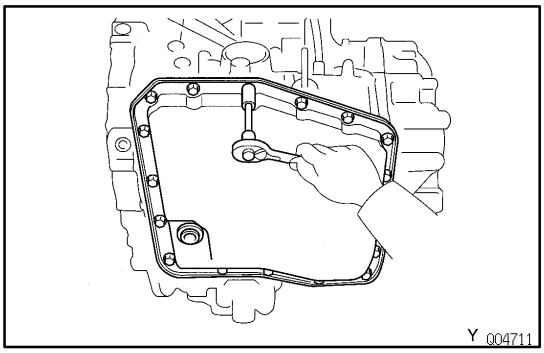

7. REMOVE OIL PAN AND GASKET

(a) Remove the 17 bolts.

(b) Remove the oil pan by lifting transaxle case.

NOTICE: Do not turn the transaxle over as this will contaminate the valve body with the foreign materials in the bottom of the oil pan.

(c) Place the transaxle on wooden blocks to prevent damage to the oil pipe bracket.

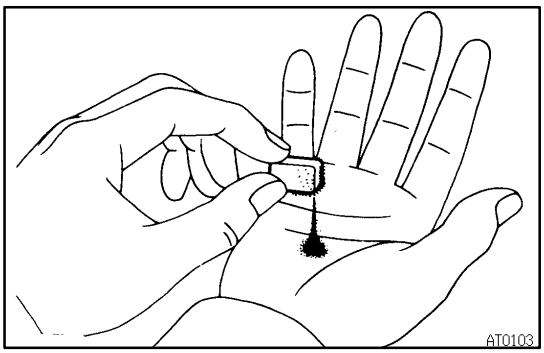

8. EXHAUST PARTICLES IN PAN

Remove the magnet and use it to collect any steel chips. Lock carefully at the chips and particles in the oil pan and on magnet to anticipate what type of wear you will find in the transaxle.

- Steel (magnetic): bearing, gear and plate wear
- Brass (non–magnetic): bushing wear

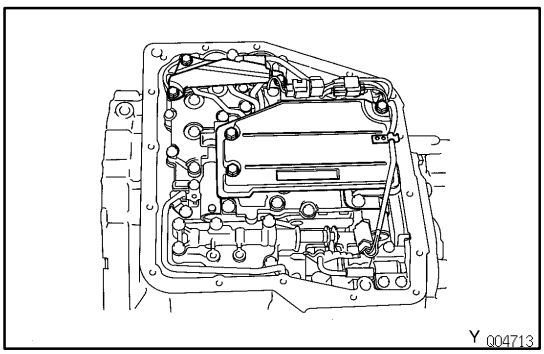

9. REMOVE OIL PIPE BRACKET AND STRAINER

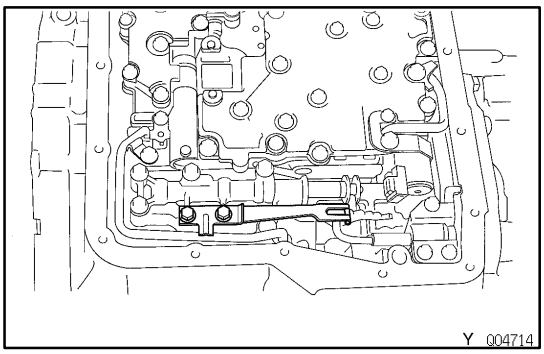

10. REMOVE MANUAL VALVE BODY

(a) Remove the 2 bolts and detent spring.

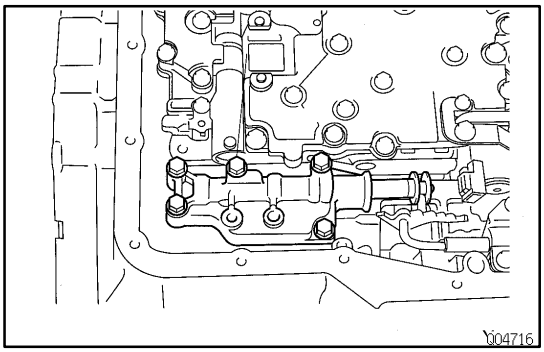

(b) Remove the 5 bolts and manual valve body with the manual valve.

(c) Remove the manual valve from the manual valve body.

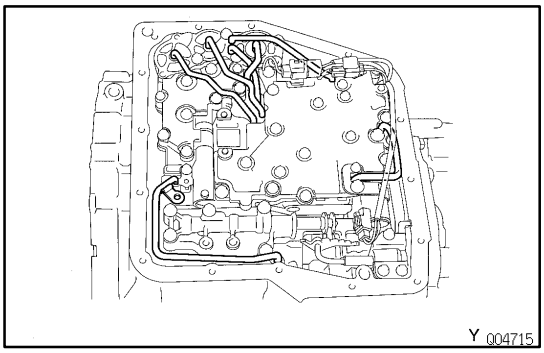

11. REMOVE OIL PIPES

(a) Remove the bolt.

(b) Pry up both pipe ends with a large screwdriver and remove the 6 pipes.

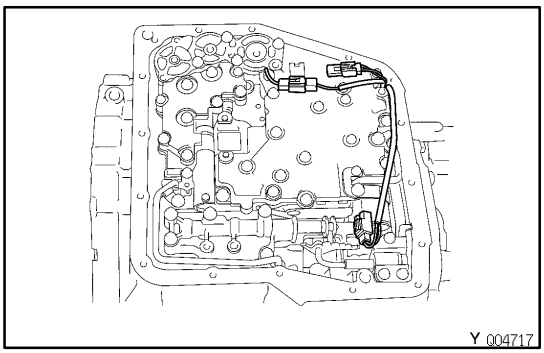

12. DISCONNECT SOLENOID CONNECTORS

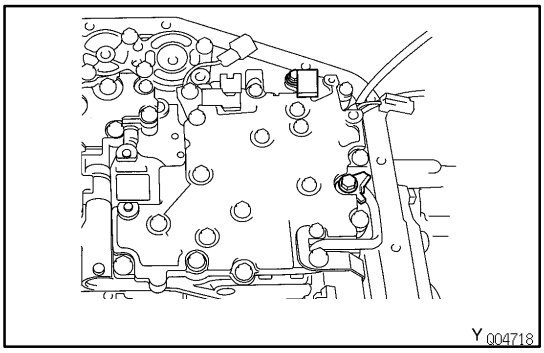

13. REMOVE CONNECTOR CLAMP AND PIPE RETAINER

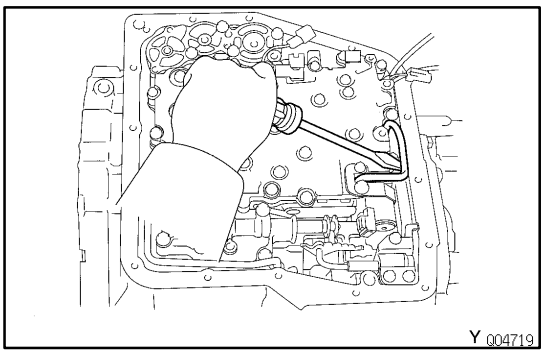

14. REMOVE B_3 APPLY PIPE

Pry up the pipe with a screwdriver and remove the pipe.

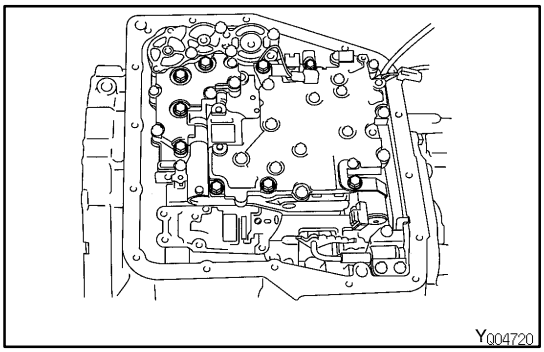

15. REMOVE VALVE BODY

(a) Remove the 9 bolts.

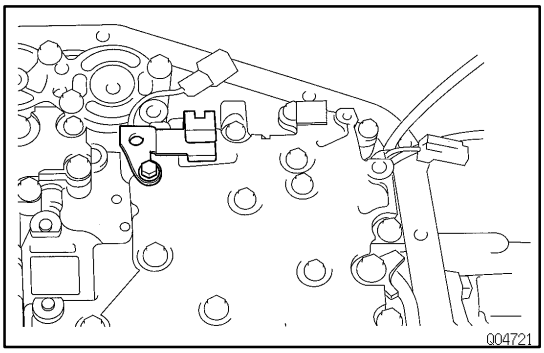

(b) Remove the wire harness clamp.

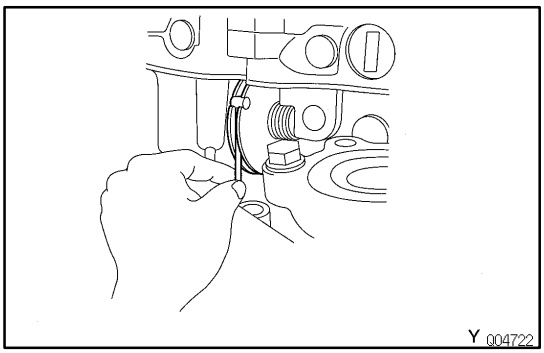

(c) Disconnect the throttle cable from the cam, and remove the valve body.

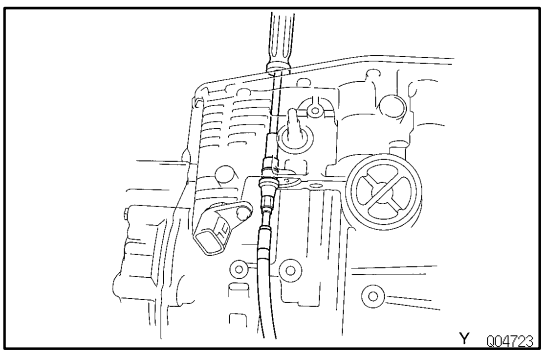

16. REMOVE THROTTLE CABLE

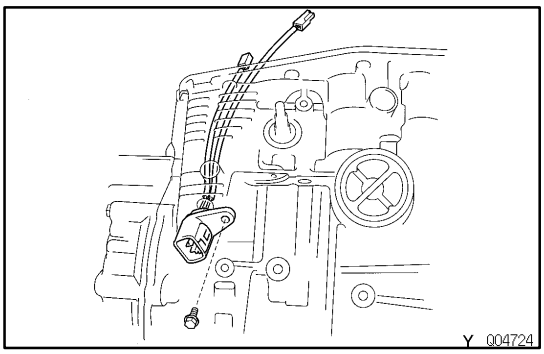

17. REMOVE SOLENOID WIRING

Remove the bolt and the solenoid wiring.

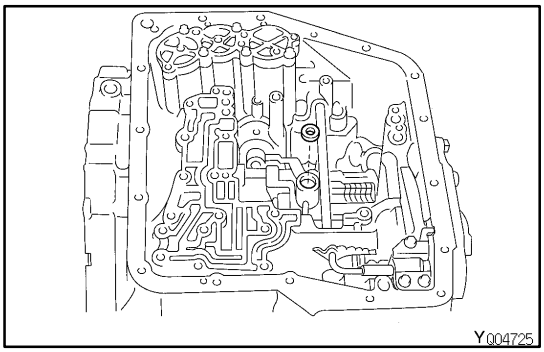

18. REMOVE SECOND BRAKE APPLY GASKET

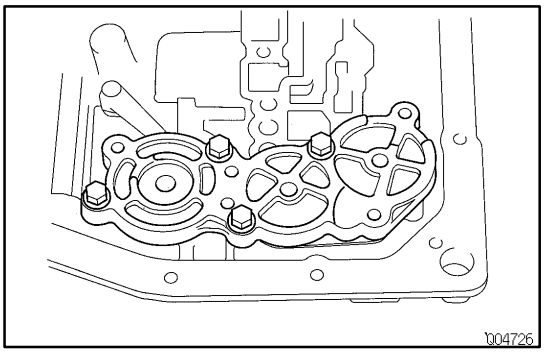

19. REMOVE ACCUMULATOR PISTONS AND SPRINGS

(a) Loosen the 4 bolts one turn at a time until the spring tension is released.

(b) Remove the cover and gasket.

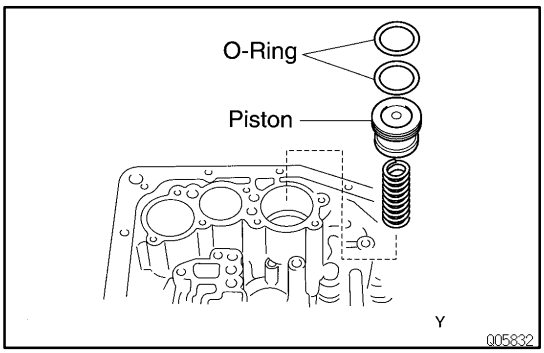

(c) Remove the C_1 accumulator piston and spring.

(d) Remove the 2 O–rings from the piston.

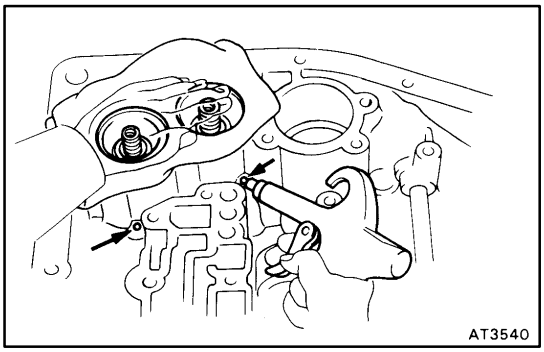

(e) Pop out pistons for C_2 and B_2 into a rag, using low–pressure compressed air (98 kPa, 1 kgf/cm^2, 14 psi).

(f) Remove the O–rings from the pistons.

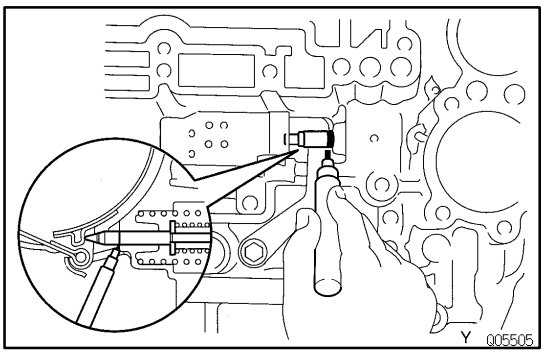

20. MEASURE PISTON STROKE SECOND COAST BRAKE

(a) Apply a small amount of paint to the piston rod at the point it meets the case.

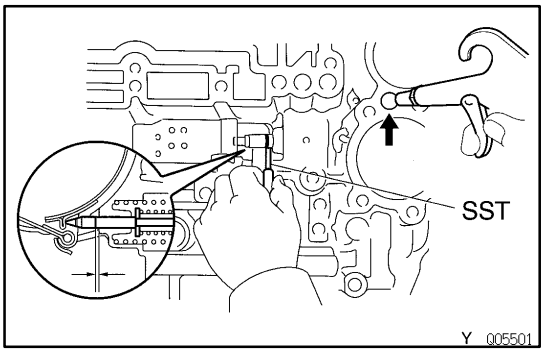

(b) Using SST, measure the piston stroke while applying and releasing compressed air (392–785 kPa, 4–8 kgf/cm^2, 57–114 psi).
SST 09240–00020
Maximum thrust clearance:
2.0–3.5 mm (0.079–0.138 in.)
If the piston stroke exceeds the limit, inspect the second coast brake band.

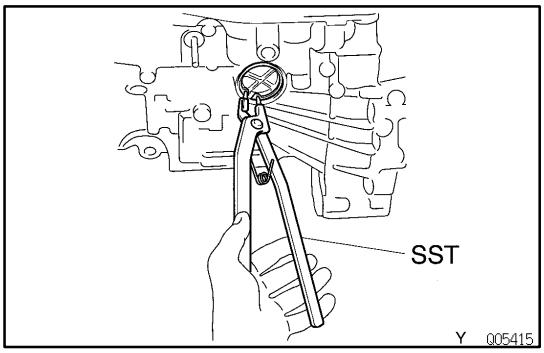

21. REMOVE SECOND COAST BRAKE PISTON

(a) Using SST, remove the snap ring.
SST 09350–32014

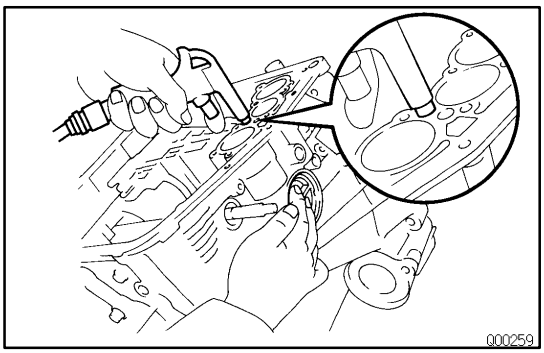

(b) Applying compressed air to the oil hole, remove the second coast brake cover, piston assembly and spring.
(c) Remove the 2 O–rings from the cover.

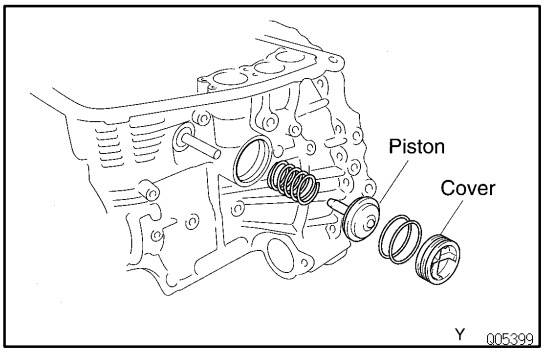

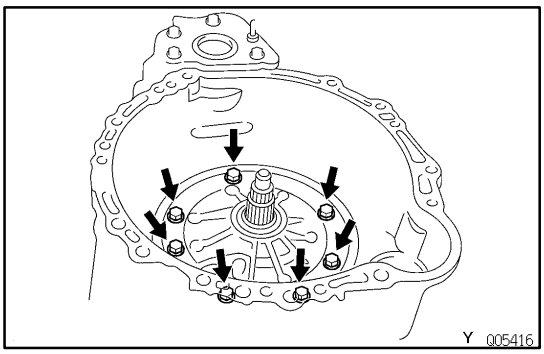

22. STAND TRANSAXLE ENGINE SIDE UPWARD

23. REMOVE OIL PUMP

NOTICE: Before removing the oil pump, remove the second coast brake piston.

(a) Remove the 7 bolts.

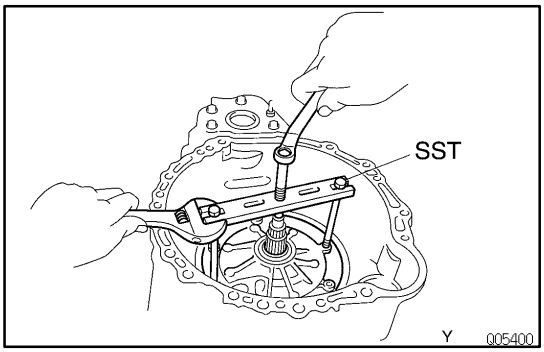

(b) Using SST, pull out the oil pump from the transaxle case.
SST 09350–32014

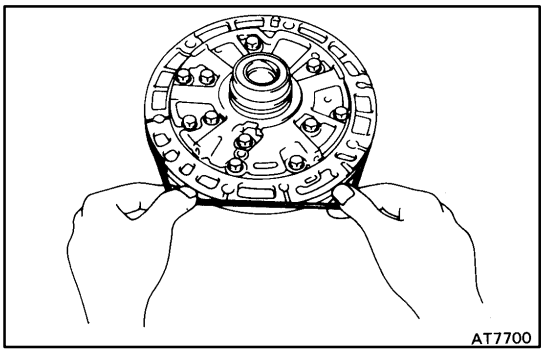

24. REMOVE O–RING FROM OIL PUMP

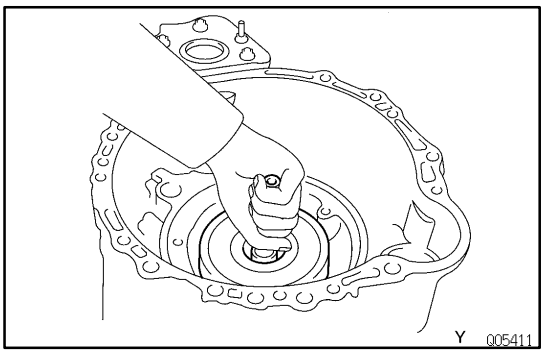

25. REMOVE DIRECT CLUTCH AND FORWARD CLUTCH

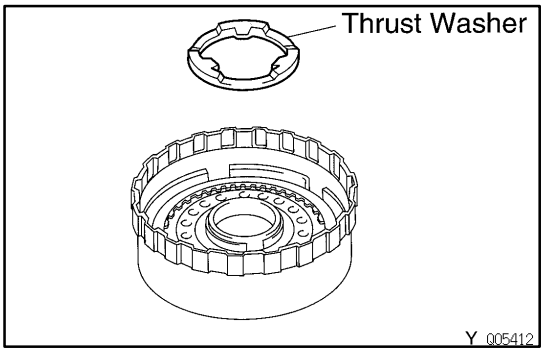

26. SEPARATE DIRECT CLUTCH AND FORWARD CLUTCH

(a) Separate the direct clutch and forward clutch.

(b) Remove the thrust washer from direct clutch.

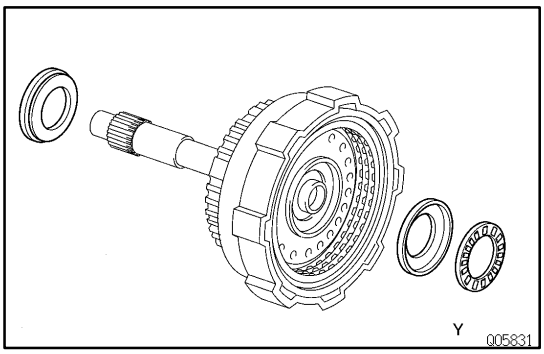

27. REMOVE BEARING FROM FORWARD CLUTCH

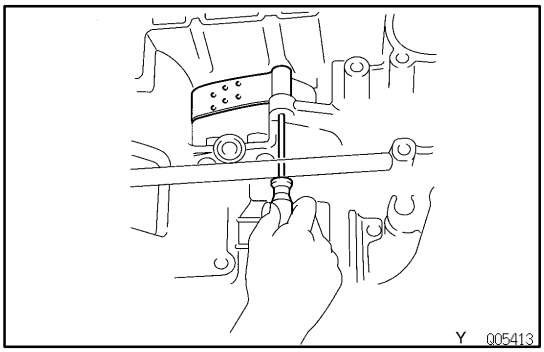

28. REMOVE SECOND COAST BRAKE BAND

(a) Push the pin with a small screwdriver and remove it from the bolt hole of the oil pump mounting.

(b) Remove the brake band.

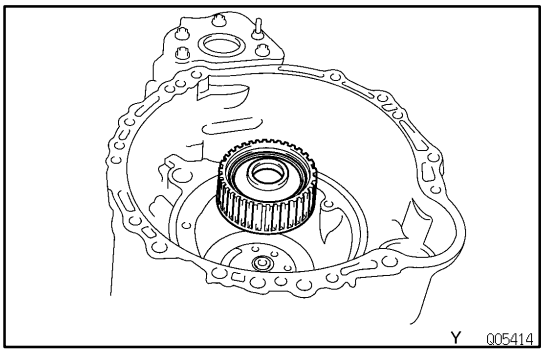

29. REMOVE FRONT PLANETARY RING GEAR

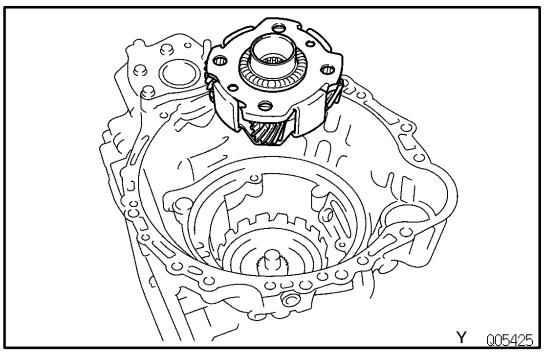

30. REMOVE FRONT PLANETARY GEAR

(a) Remove the front planetary gear.

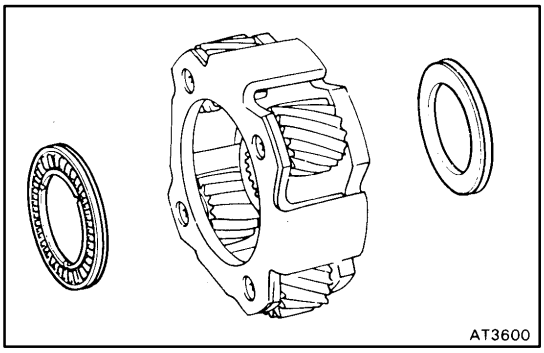

(b) Remove the 2 bearings from the planetary gear.

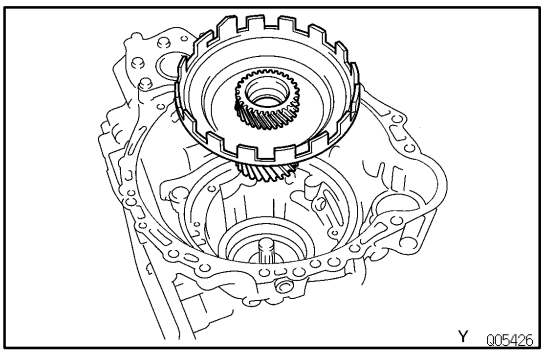

31. REMOVE SUN GEAR AND SUN GEAR INPUT DRUM

(a) Remove the sun gear and the sun gear input drum.

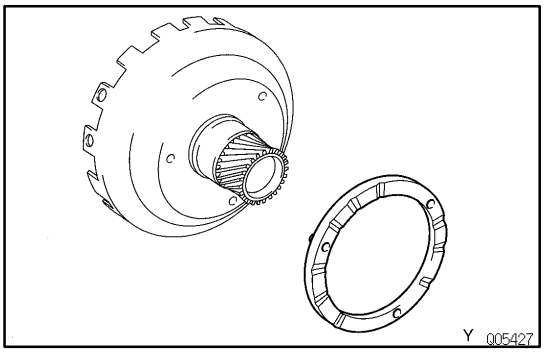

(b) Remove the thrust washer from sun gear input drum.

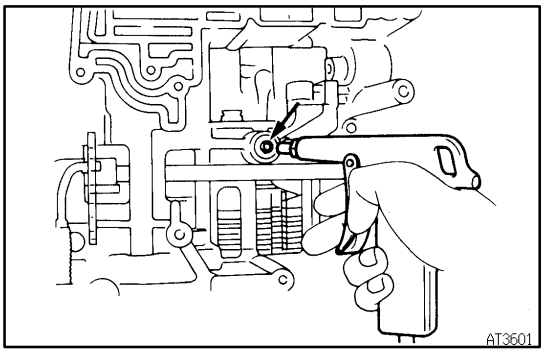

32. CHECK OPERATION OF SECOND BRAKE PISTON

Apply compressed air into the case passage and confirm that the piston moves.

If the piston does not move, disassembe and inspect.

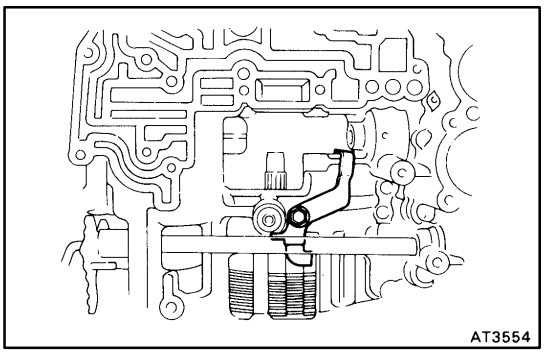

33. REMOVE SECOND COAST BRAKE BAND GUIDE

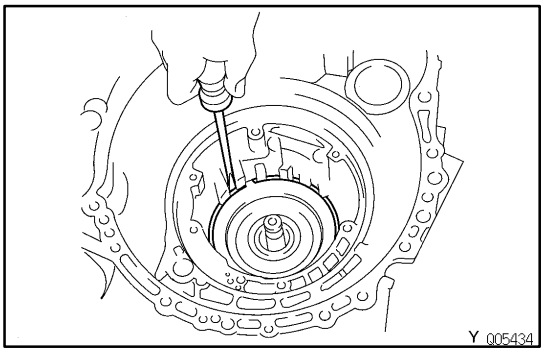

34. REMOVE SECOND BRAKE DRUM

(a) Remove the snap ring.

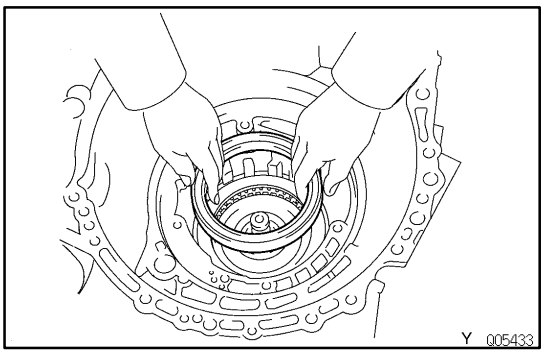

(b) Remove the second brake drum.

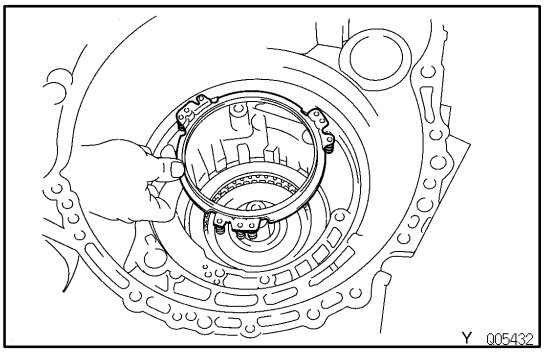

35. REMOVE SECOND BRAKE PISTON RETURN SPRING

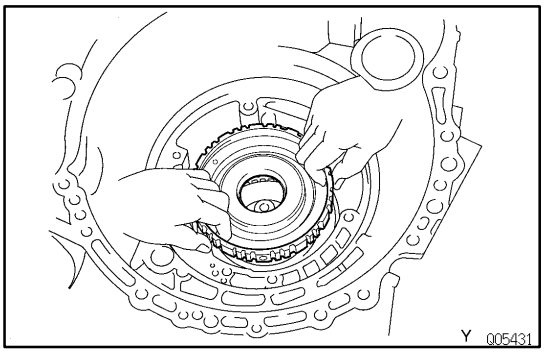

36. REMOVE NO.1 ONE–WAY CLUTCH

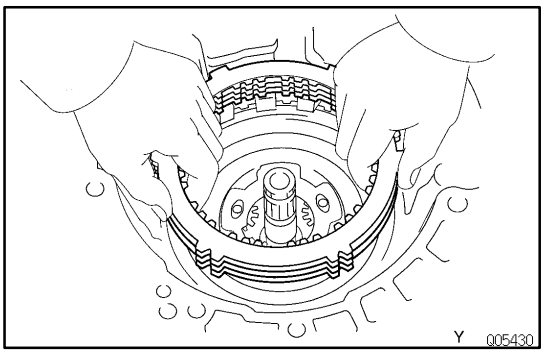

37. REMOVE PLATES, DISCS AND FLANGE

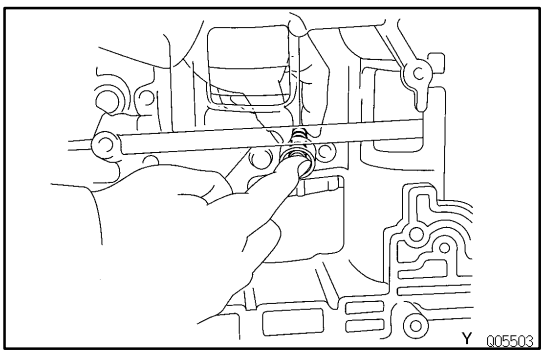

38. REMOVE SECOND BRAKE DRUM GASKET

Remove the gasket.

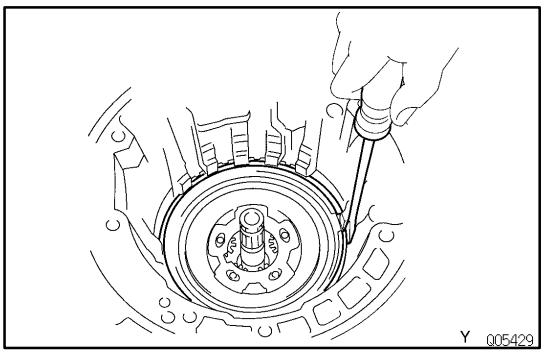

39. REMOVE NO.2 ONE–WAY CLUTCH AND REAR PLANETARY GEAR

(a) Remove the snap ring.

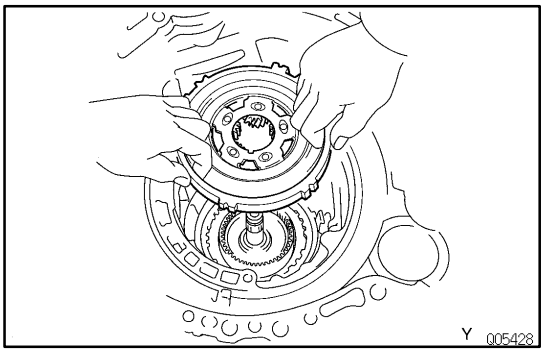

(b) Remove the No.2 one–way clutch and rear planetary gear.

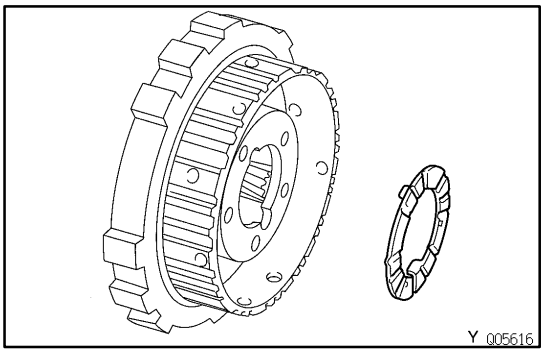

(c) Remove the thrust washer from the rear planetary gear.

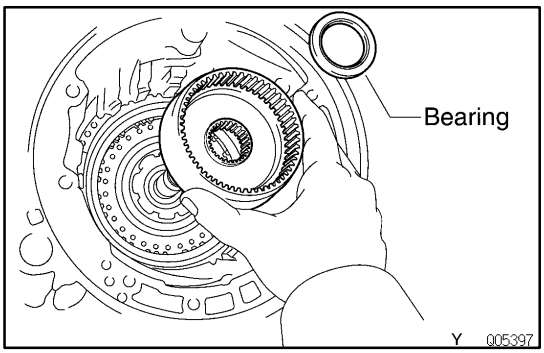

40. REMOVE REAR PLANETARY RING GEAR

(a) Remove the rear planetary ring gear.

(b) Remove the bearing from the ring gear.

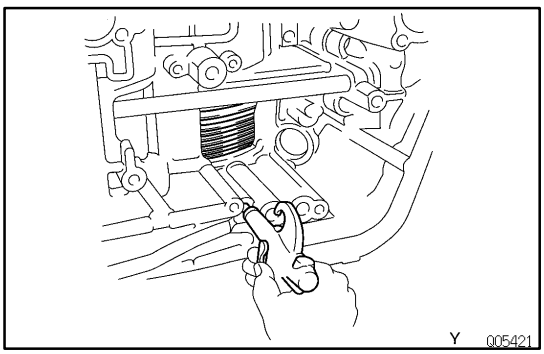

41. CHECK FIRST AND REVERSE BRAKE

(a) Check the operation of the first and reverse brake piston.
Apply compressed air into the case passage and confirm that the piston moves.
If the piston does not move, disassemble and inspect.

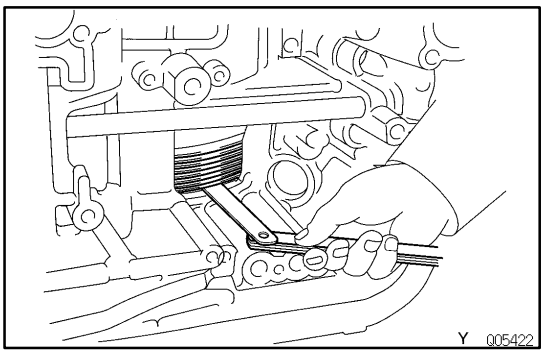

(b) Using a filler gauge, check the pack clearance of the first and reverse brake.
Clearance: 1.92–2.68 mm (0.0756–0.1055 in.)

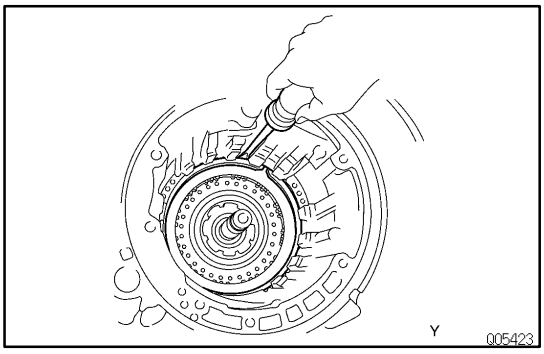

42. REMOVE FLANGE, DISCS AND PLATES OF FIRST AND REVERSE BRAKE

(a) Remove the snap ring.

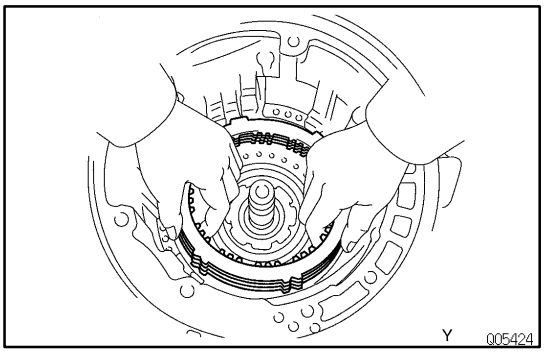

(b) Remove the flange, 6 discs and plates.

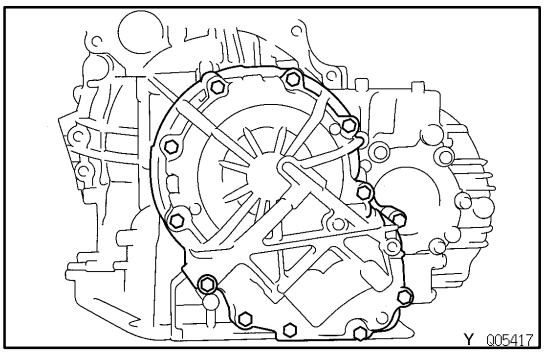

43. TURN TRANSAXLE CASE AROUND

44. REMOVE OVERDRIVE UNIT

(a) Remove the 13 bolts.

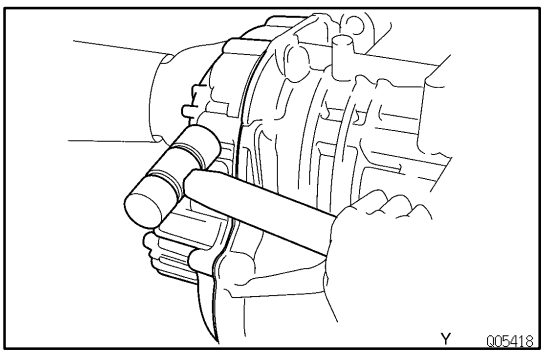

(b) Tap on the circumference of the overdrive case with a plastic hammer to remove the overdrive case and gasket.

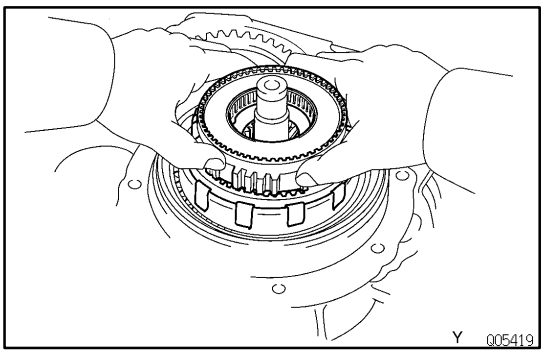

(c) Remove the overdrive planetary gear from transaxle case.

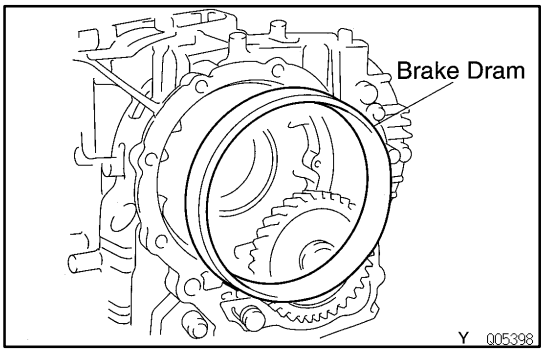

(d) Remove the overdrive brake drum from the transaxle case.

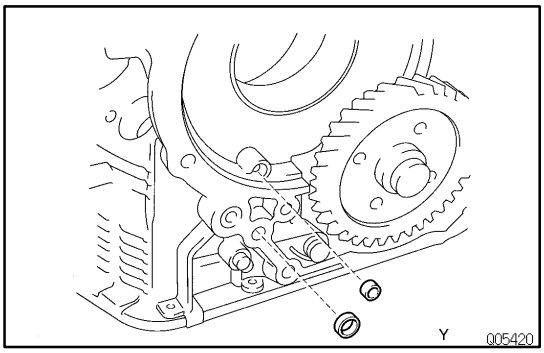

(e) Remove the overdrive clutch apply gasket and overdrive brake apply gasket.

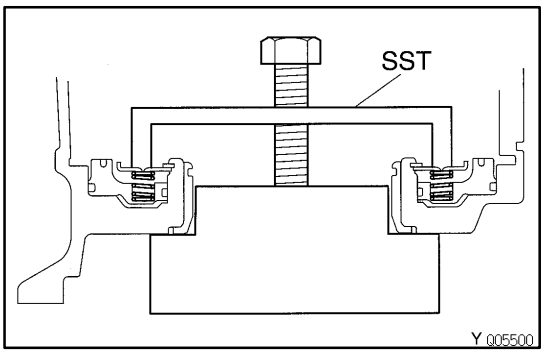

45. REMOVE FIRST AND REVERSE BRAKE PISTON

(a) Remove the piston return spring.

- Place SST, compress the return spring evenly by tightening the bolt gradually.

SST 09350–32014 (09351–32040)

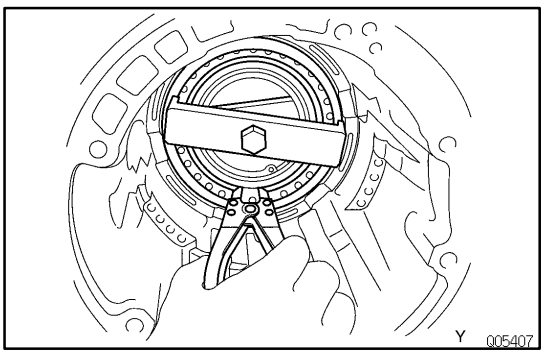

- Using snap ring pliers, remove the snap ring.
- Remove the SST.
- Remove the return spring from the case.

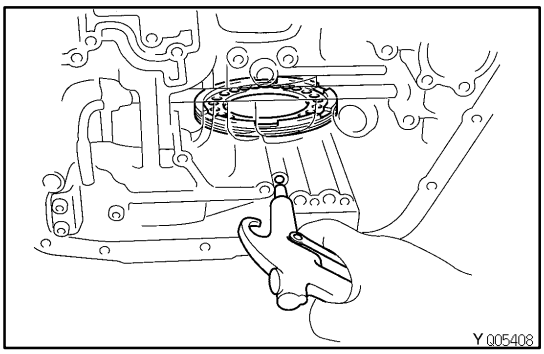

(b) Apply compressed air into the passage of the case to remove the piston.
HINT: Hold the piston so it is not slanted and blow with the gun slightly away from the oil hole.

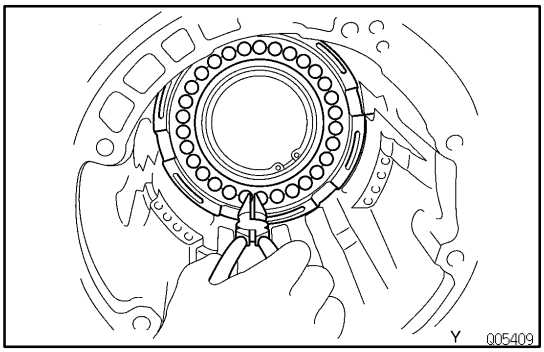

(c) If the piston does not pop out with compressed air, use needle–nose pliers to remove it.

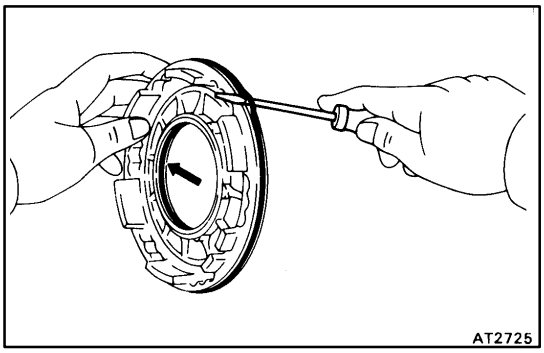

(d) Remove the 2 O–rings from the piston.

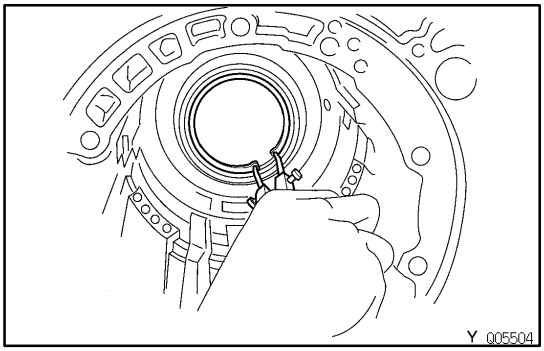

(e) Remove the snap ring.

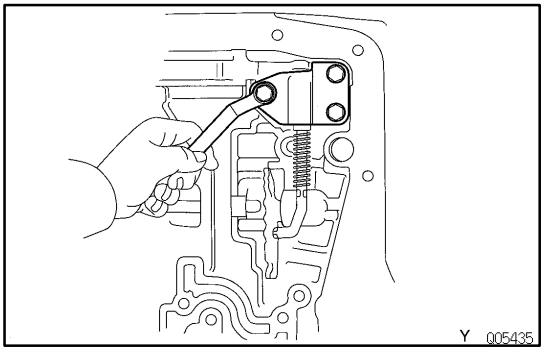

46. REMOVE PARKING LOCK PAWL BRACKET AND GUIDE

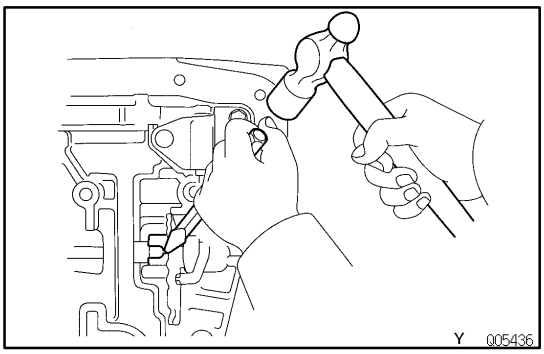

47. REMOVE MANUAL VALVE SHAFT

(a) Using a chisel and hammer, cut the collar.

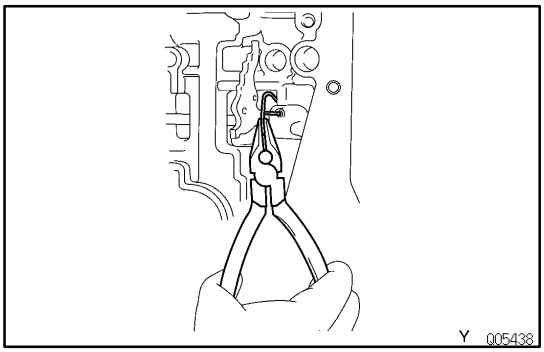

(b) Remove the retaining spring.

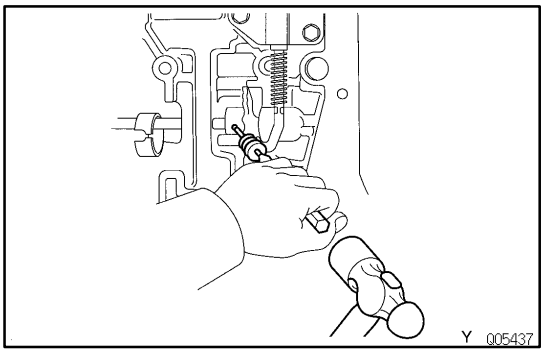

(c) Using a pin punch and hammer, drive out the pin.

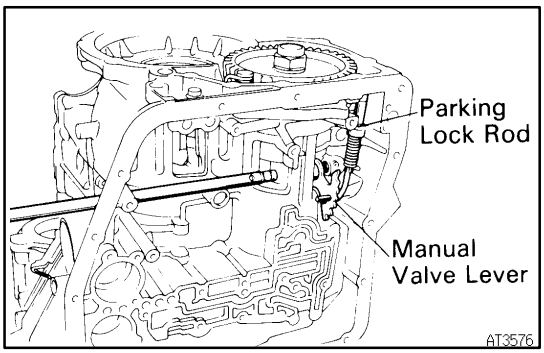

(d) Slide out the shaft from the transaxle case and remove the manual valve lever and parking lock rod.

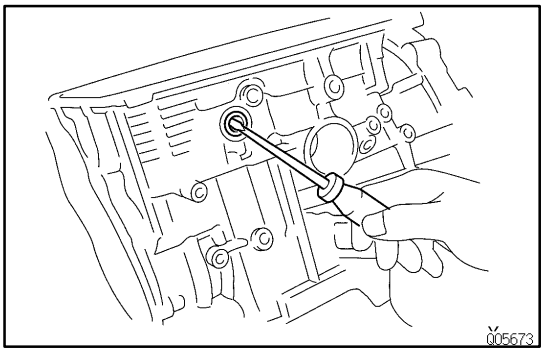

48. REMOVE MANUAL VALVE SHAFT OIL SEAL

Using a screwdriver, remove the oil seal.

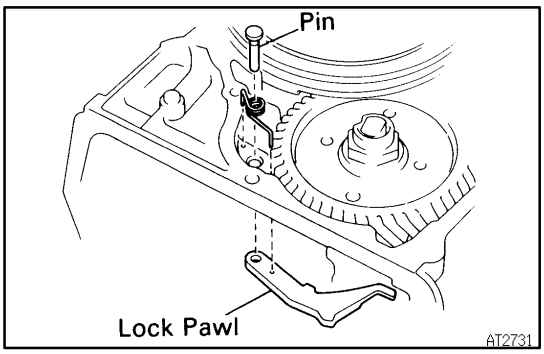

49. REMOVE PIN, SPRING AND PARKING LOCK PAWL

AX02S–04

DIFFERENTIAL COMPONENT PARTS REMOVAL

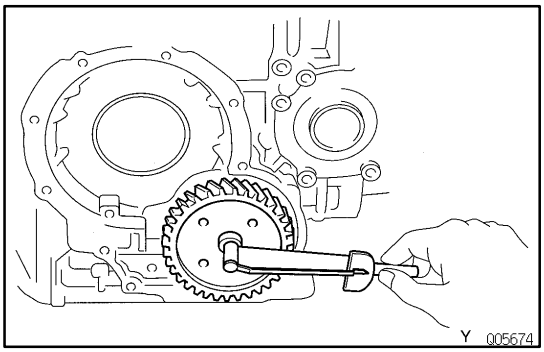

1. MEASURE DIFFERENTIAL TOTAL PRELOAD

Using a small torque wrench, measure the total preload and make a note of it.

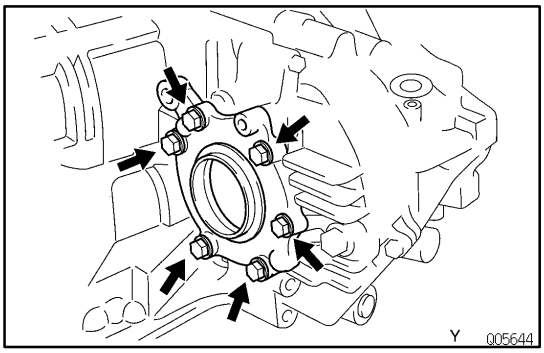

2. REMOVE LH BEARING RETAINER

(a) Remove the 6 bolts.

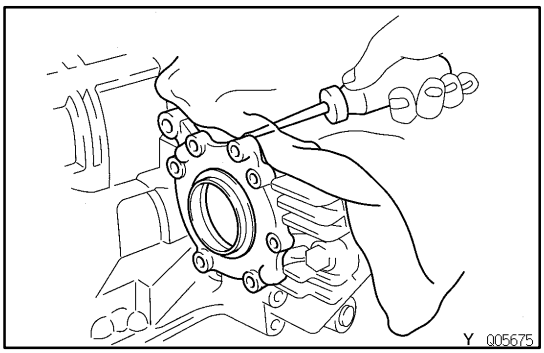

(b) Using a large screwdriver, remove the LH bearing retainer.

NOTICE: Wrap the screwdriver tip in a rag, etc. to avoid damaging the case and retainer.

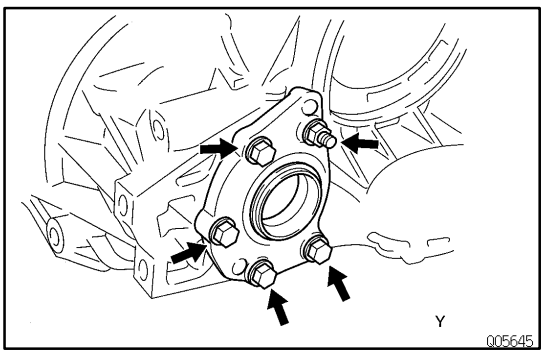

3. REMOVE RH RETAINER

(a) Remove the 5 bolts.

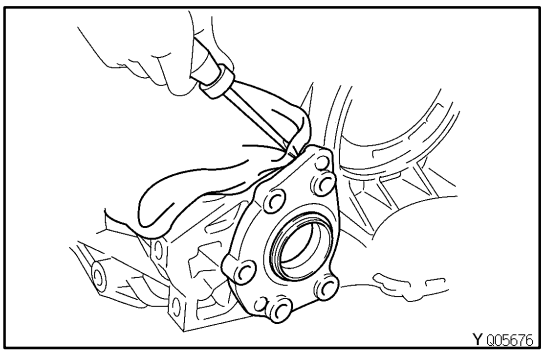

(b) Using a large screwdriver, remove the RH retainer.
NOTICE: Wrap the screwdriver tip in a rag, etc. to avoid damaging the case and retainer.

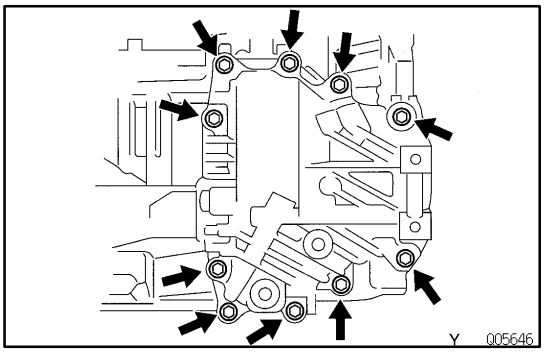

4. REMOVE CARRIER COVER

(a) Remove the 10 bolts.

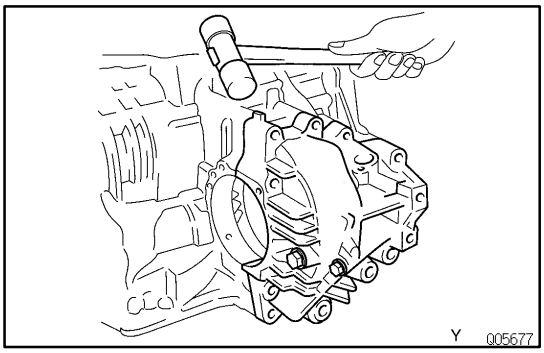

(b) Tap the carrier cover with a plastic hammer to remove it.

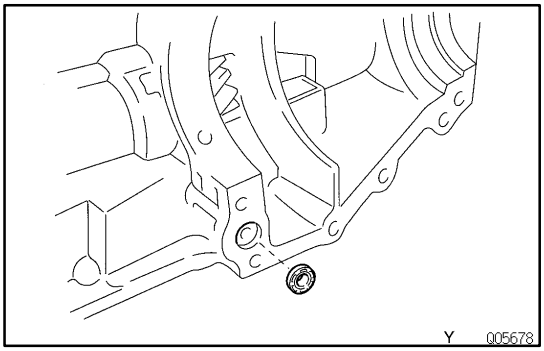

(c) Remove the apply gasket.

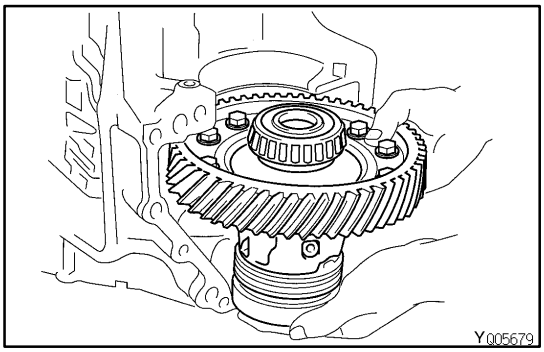

5. REMOVE DIFFERENTIAL CASE

Remove the differential case, outer case and shim from the transaxle case.

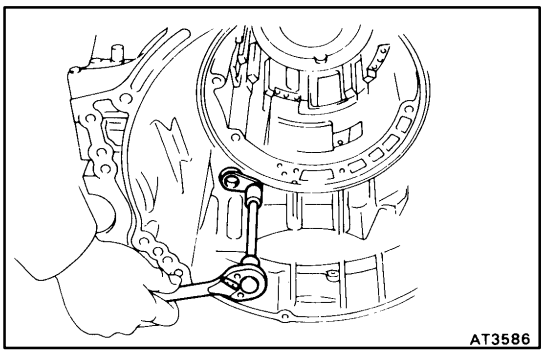

6. REMOVE TRANSAXLE CAP

(a) Remove the bolt.

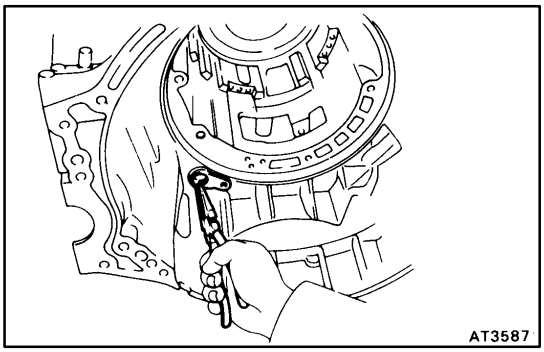

(b) Using pliers, pull out the drive pinion cap.

(c) Remove the O–rings from the cap.

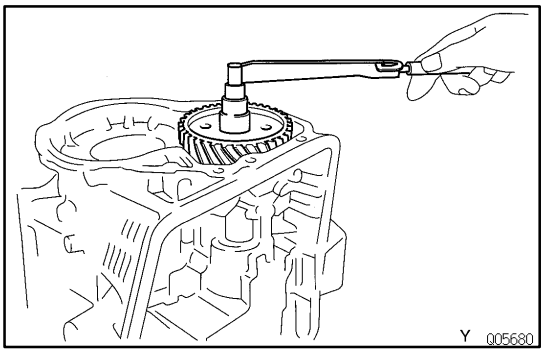

7. MEASURE DRIVE PINION PRELOAD

Using a small torque wrench, measure the drive pinion preload.

Preload (Reused bearing at starting):

0.5–0.8 N·m (5–8 kgf·cm, 4.3–6.9 in.·lbf)

The total preload measured in step 1 minus the drive pinion preload equals 0.1–0.2 N·m (1.3–2.0 kgf·cm, 1.1–1.7 in.·lbf). If the result is not within this specification, the side bearing preload is suspect.

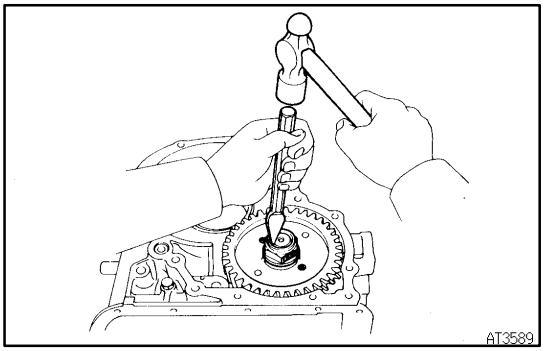

8. REMOVE COUNTER DRIVEN GEAR

(a) Using a chisel and hammer, loosen the staked part of the nut.

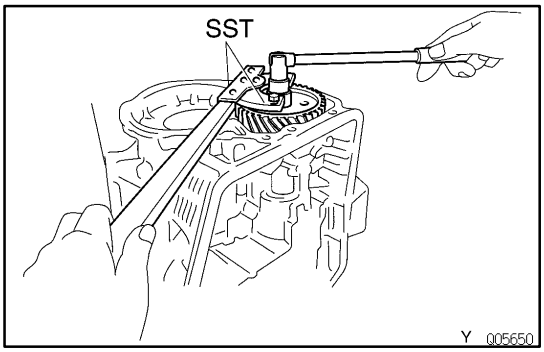

(b) Using SST to hold the gear, remove the nut.
SST 09330–00021, 09350–32014 (09351–32032)

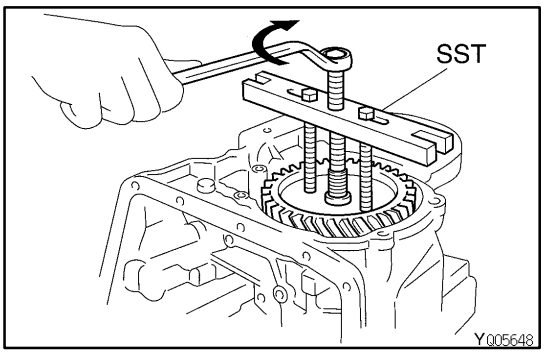

(c) Using SST, remove the gear and bearing.
SST 09350–32014 (09351–32061)

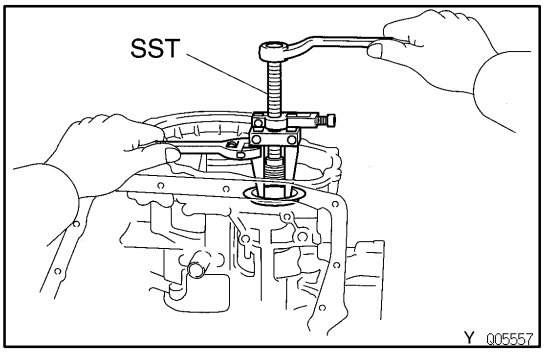

9. REMOVE OUTER RACE, SPACER AND OIL SLINGER

(a) Using SST, remove the outer race with oil slinger and spacer.
SST 09350–32014 (09308–10010)

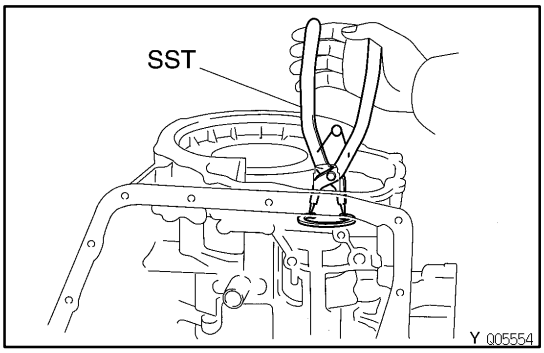

(b) Using SST, remove the snap ring.
SST 09350–32014 (09351–32050)

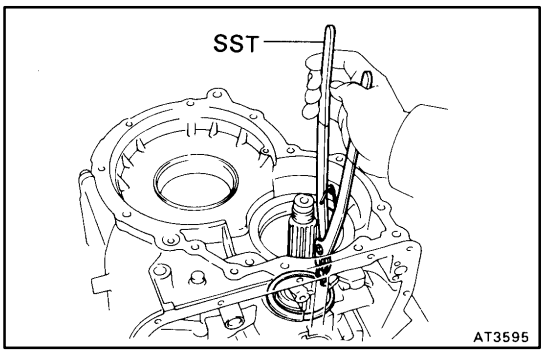

10. REMOVE DRIVE PINION

(a) Using SST, remove the snap ring.
SST 09350–32014 (09351–32050)

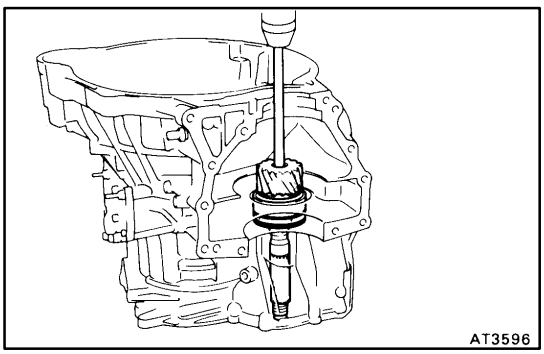

(b) Install the bar into the case hole to drive out the drive pinion.

(c) Using a press, drive out the drive pinion from transaxle case.

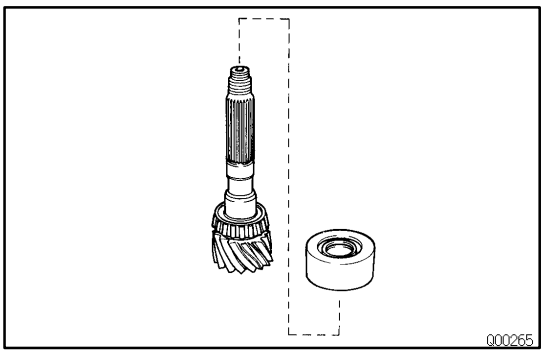

(d) Remove the bearing cage from drive pinion.

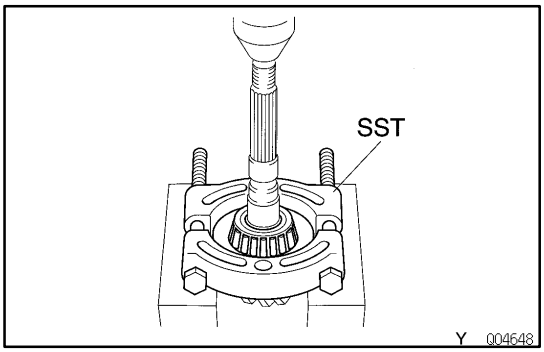

(e) Using SST, press out the bearing.
SST 09950–00020

AX02T–07

GENERAL NOTES

The instructions here are organized so that you work on only one component group at a time.

This will help avoid confusion from similar–looking parts of different subassemblies being on your workbench at the same time.

The component groups are inspected and repaired from the converter housing side.

As much as possible, complete the inspection, repair and assembly before proceeding to the next component group. If a component group cannot be assembled because parts are being ordered, be sure to keep all parts of that group in a separate container while proceeding with disassembly, inspection, repair and assembly of other component groups.

Recommended fluid for the automatic transaxle: ATF D–@@@@@: [g 2] or DEXRON®@@@@@: [g 3](DEXRON®@@@@@: [g 2])

1. GENERAL CLEANING NOTES:

(a) All disassembled parts should be washed clean and any fluid passages and holes blown through with compressed air.

(b) When using compressed air to dry parts, always aim away from yourself to prevent accidentally spraying automatic transaxle fluid or kerosene in your face.

(c) The recommended automatic transaxle fluid or kerosene should be used for cleaning.

2. PARTS ARRANGEMENT:

(a) After cleaning, the parts should be arranged in the correct order to allow efficient inspection, repairs, and reassembly.

(b) When disassembling a valve body, be sure to keep each valve together with the corresponding spring.

(c) New brakes and clutches that are to be used for replacement must be soaked in transaxle fluid for at least fifteen minutes before assembly.

3. GENERAL ASSEMBLY:

(a) All oil seal rings, clutch discs, clutch plates, rotating parts, and sliding surfaces should be coated with transmission fluid prior to reassembly.

(b) All gaskets and rubber O–rings should be replaced.

(c) Make sure that the ends of a snap ring are not aligned with one of the cutouts and are installed in the groove correctly.

(d) If a worn bushing is to be replaced, the subassembly containing that bushing must be replaced.

(e) Check thrust bearings and races for wear or damage. Replace if necessary.

(f) Use petroleum jelly to keep parts in place.

SECOND COAST BRAKE

AX02U–02

COMPONENTS

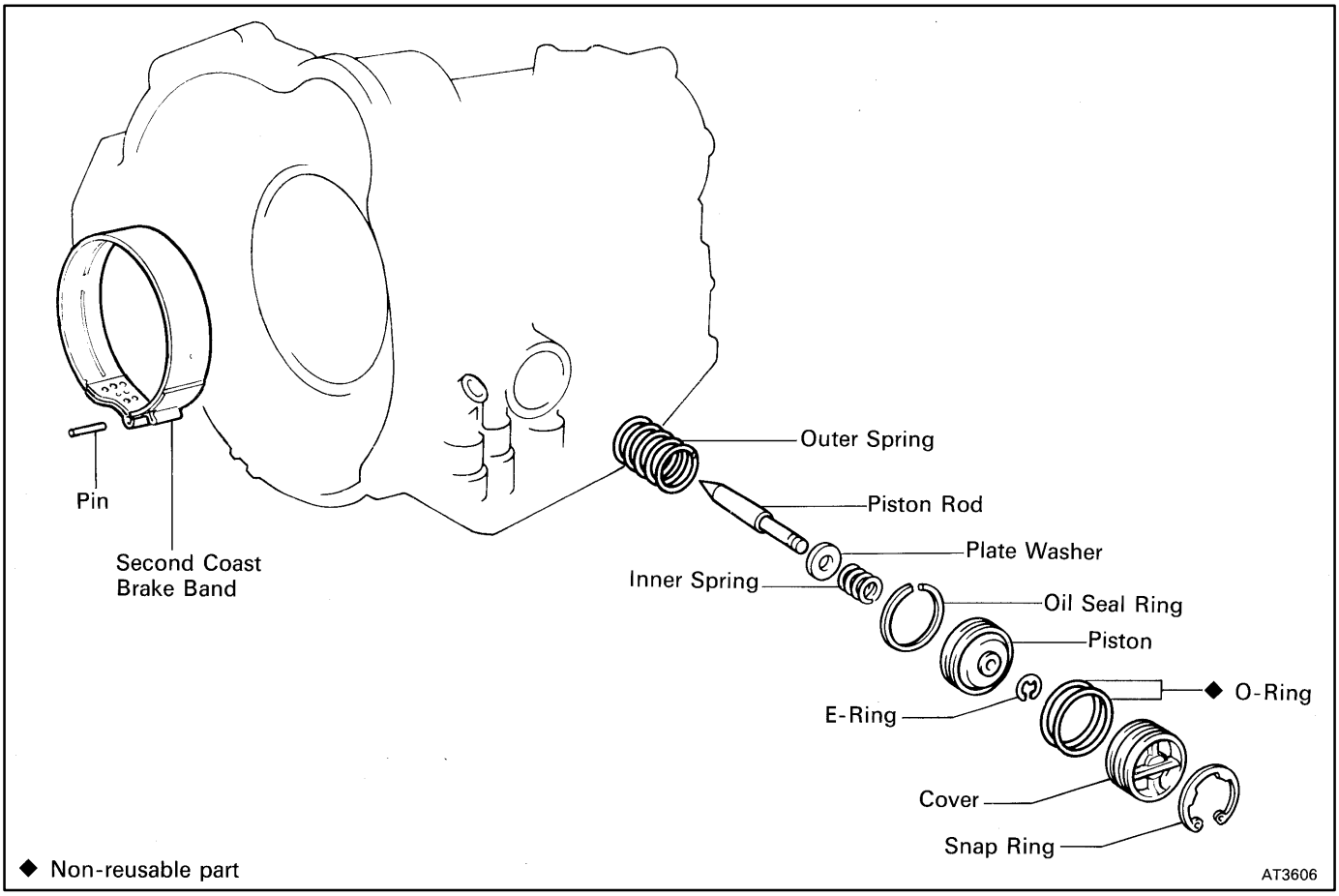

AX02V–02

SECOND COAST BRAKE PISTON DISASSEMBLY

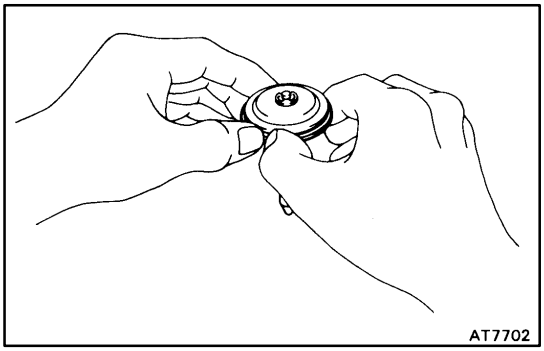

1. REMOVE OIL SEAL RING

Remove the oil seal ring from the piston.

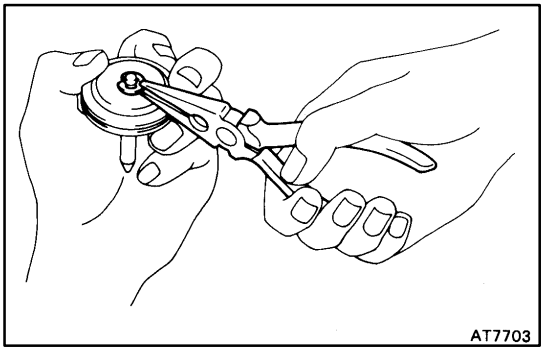

2. REMOVE PISTON ROD

(a) Remove the E–ring while pushing the piston with needle–nose pliers.

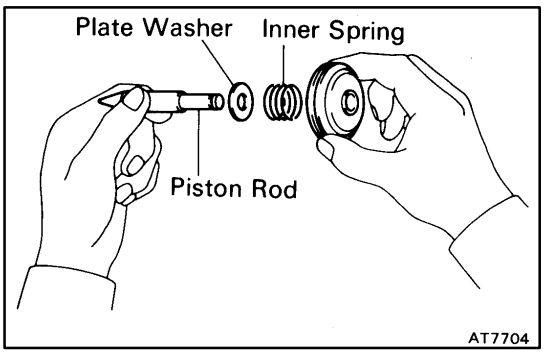

(b) Remove the inner spring, plate washer and piston rod.

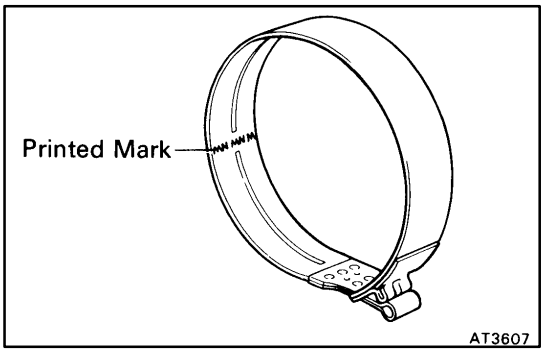

AX02W–03

SECOND COAST BRAKE COMPONENT INSPECTION

If the lining of the brake band is peeling off or discolored, or even part of the printed mark is defaced, replace the brake band.

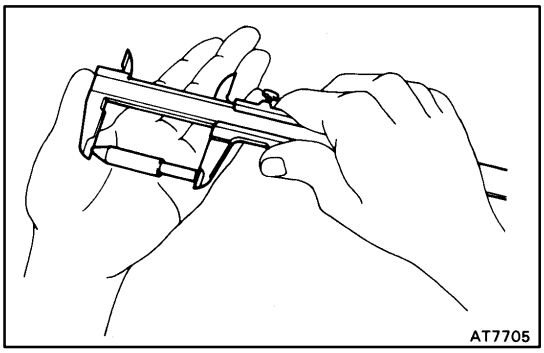

AX02X–03

SECOND COAST BRAKE PISTON ASSEMBLY

1. SELECT PISTON ROD

If the band is OK but piston stroke not within the standard value, select a new piston rod.

Piston stroke:

2.0–3.5 mm (0.079–0.138 in.)

There are 2 lengths of piston rod.

Piston rod length:

95.2 mm (3.748 in.)

96.3 mm (3.791 in.)

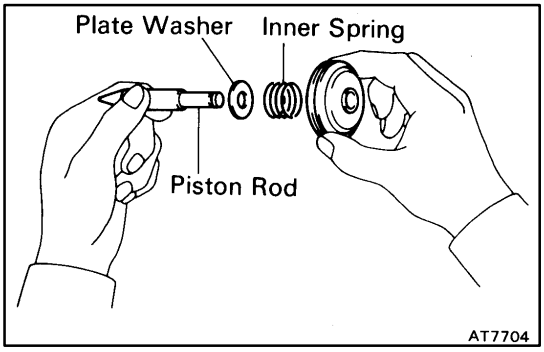

2. INSTALL PISTON ROD

(a) Install the plate washer and inner spring to the piston rod.

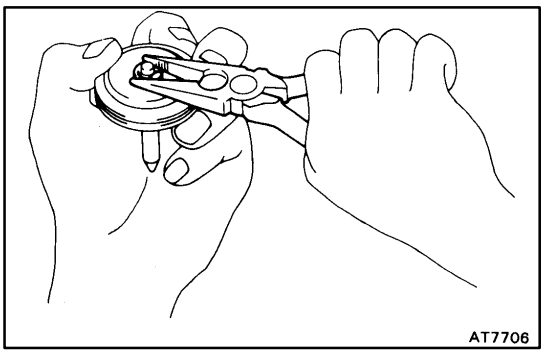

(b) Install the E–ring while pushing the piston.

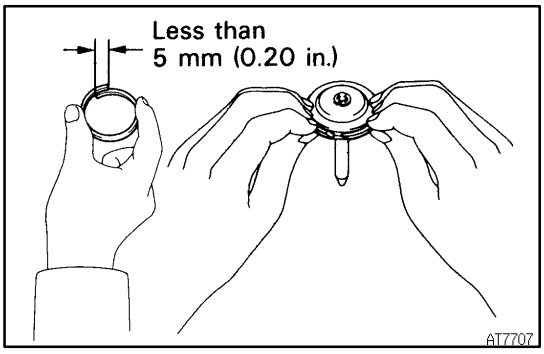

3. INSTALL OIL SEAL RING

(a) Apply ATF to the oil seal ring.

(b) Install the oil seal ring to the piston.

NOTICE: Do not spread the ring ends more than necessary.

OIL PUMP
COMPONENTS

AX02Y–02

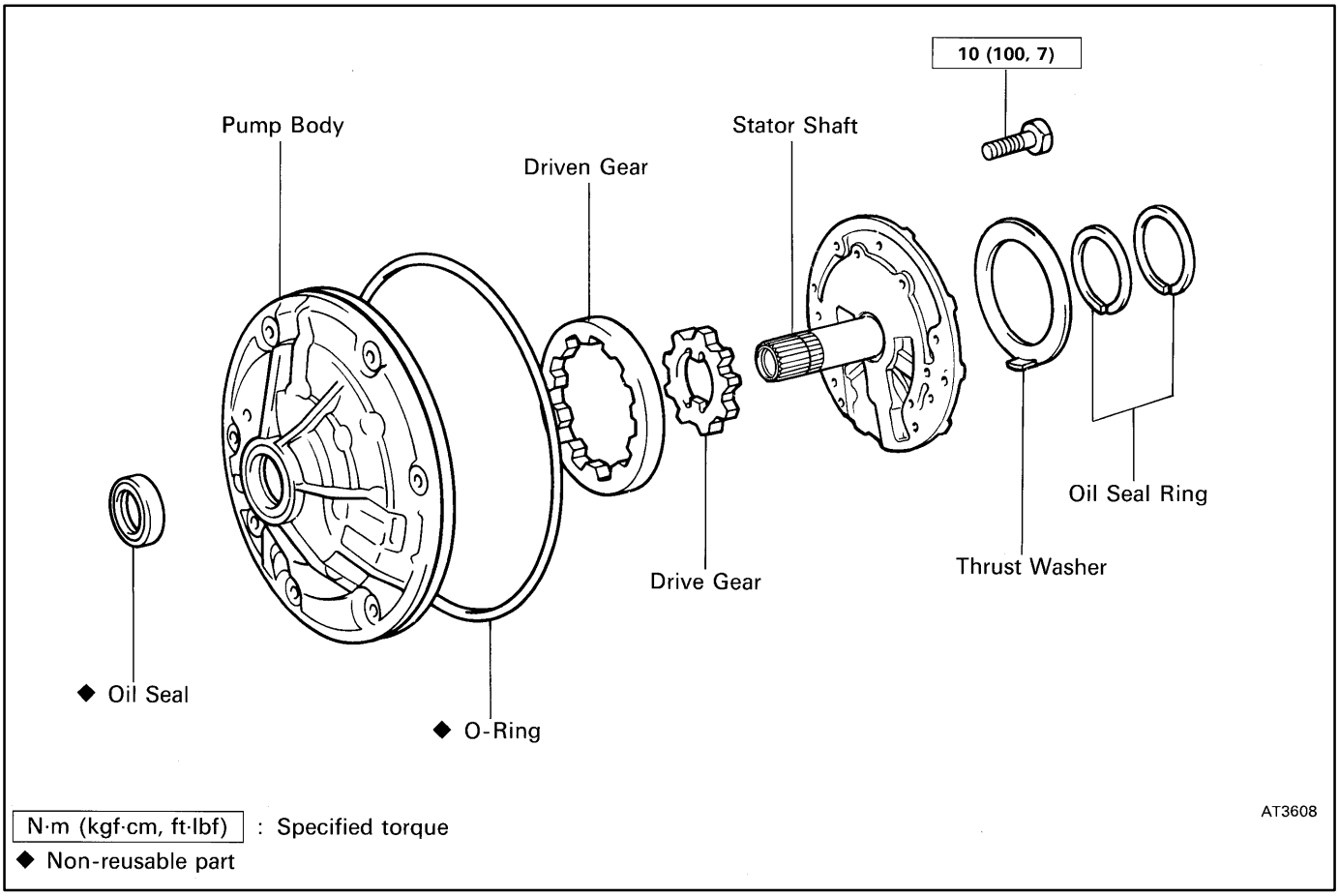

N·m (kgf·cm, ft·lbf) : Specified torque
◆ Non-reusable part

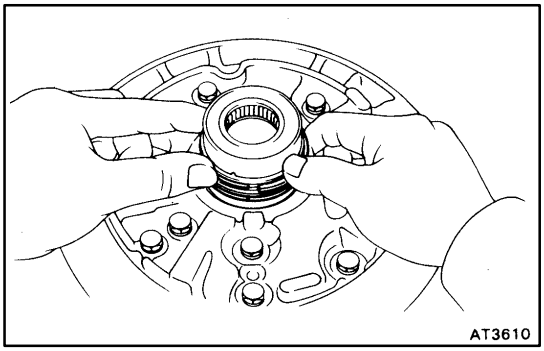

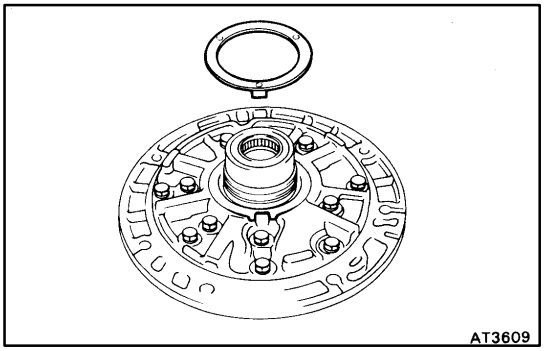

AX02Z–02

OIL PUMP DISASSEMBLY

1. REMOVE OIL SEAL RINGS

Remove the 2 oil seal rings from the stator shaft back side.

2. REMOVE THRUST WASHER FROM STATOR SHAFT BACK SIDE

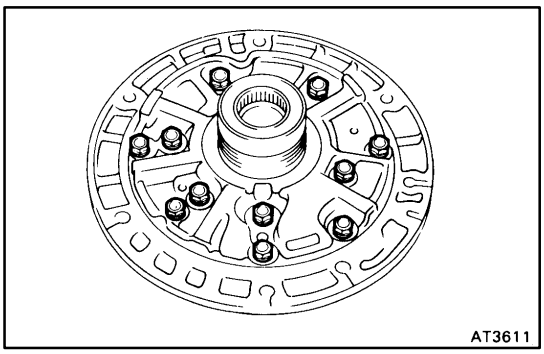

3. REMOVE STATOR SHAFT

Remove the 11 bolts and stator shaft.

HINT: Keep the gears in assembly order.

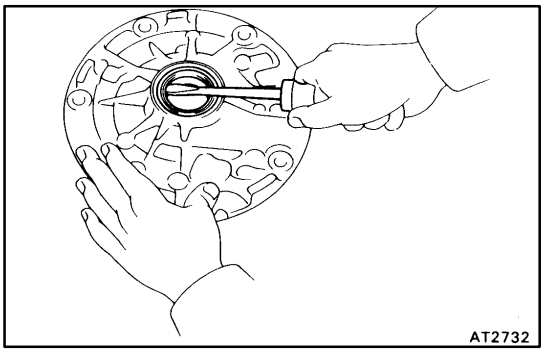

4. REMOVE FRONT OIL SEAL

Pry off the oil seal with a screwdriver.

AX030–06

OIL PUMP BUSHING INSPECTION

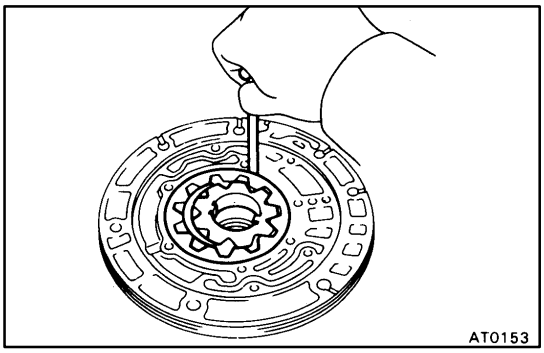

1. CHECK BODY CLEARANCE OF DRIVEN GEAR

Push the driven gear to one side of the body.

Using a feeler gauge, measure the clearance.

Standard body clearance:

0.07–0.15 mm (0.0028–0.0059 in.)

Maximum body clearance:

0.30 mm (0.0118 in.)

If the body clearance is greater than the maximum, replace the oil pump body subassembly.

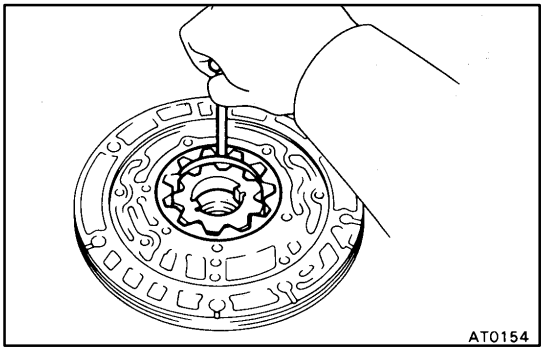

2. CHECK TIP CLEARANCE OF DRIVEN GEAR

Measure between the driven gear teeth and the crescent–shaped part of the pump body.

Standard tip clearance:

0.11–0.14 mm (0.0043–0.0055 in.)

Maximum tip clearance:

0.30 mm (0.0118 in.)

If the tip clearance is greater than the maximum, replace the oil pump body subassembly.

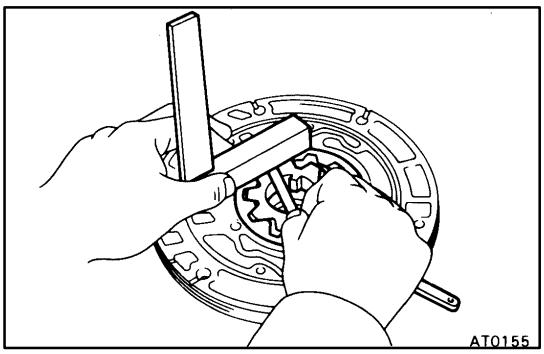

3. CHECK SIDE CLEARANCE OF BOTH GEARS

Using a steel straightedge and feeler gauge, measure the side clearance of both gears.

Standard side clearance:

0.002–0.005 mm (0.0008–0.0020 in.)

Maximum side clearance:

0.100 mm (0.0039 in.)

There are 3 different thicknesses for drive and driven gears.

Drive and driven gear thickness

Mark	Thickness mm (in.)
A	9.440–9.456 (0.3717–0.3723)
B	9.456–9.474 (0.3723–0.3730)
C	9.474–9.490 (0.3730–0.3736)

If the thickest gear can not make the side clearance within standard specification, replace the oil pump body subassembly.

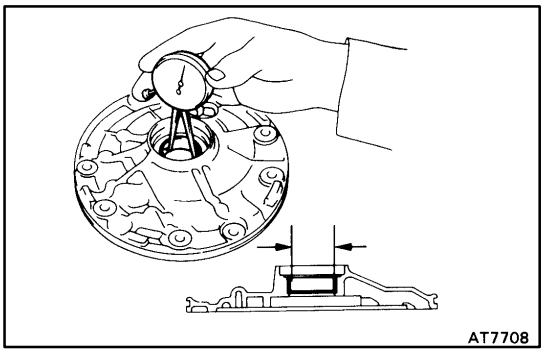

4. CHECK OIL PUMP BODY BUSHING

Using a dial indicator, measure the inside diameter of the oil pump body bushing.

Maximum inside diameter:

38.18 mm (1.5031 in.)

If the inside diameter is greater than the maximum, replace the oil pump body subassembly.

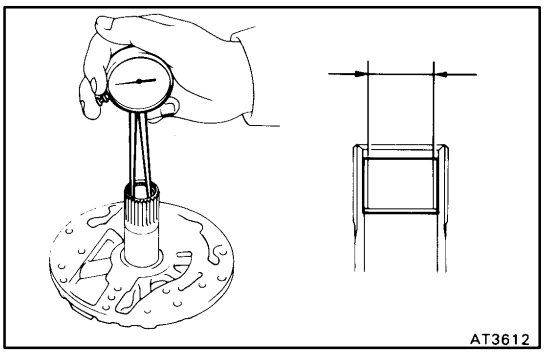

5. CHECK STATOR SHAFT BUSHING

Using a dial indicator, measure the inside diameter stator shaft bushing.

Maximum inside diameter:

21.57 mm (0.8492 in.)

If the inside diameter is greater than the maximum, replace the stator shaft.

AX031–02

OIL PUMP ASSEMBLY

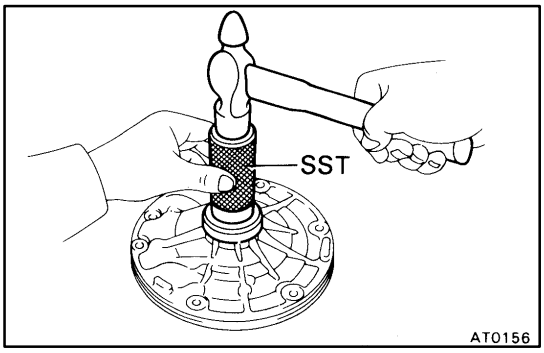

1. INSTALL FRONT OIL SEAL

Using SST and a hammer, install a new oil seal. The seal end should be flush with the outer edge of the pump body.

SST 09350–32014 (09351–32140)

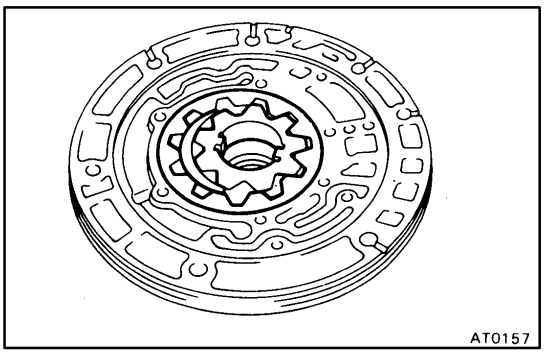

2. INSTALL DRIVEN GEAR AND DRIVE GEAR

Make sure the top of the gears are facing upward.

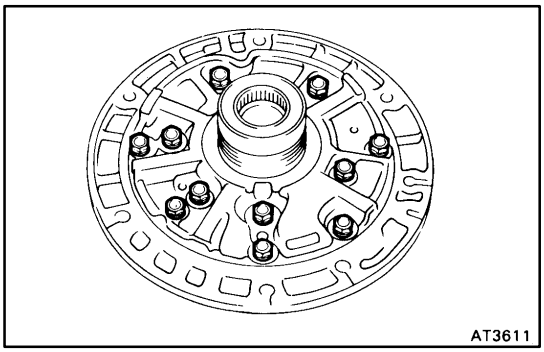

3. INSTALL STATOR SHAFT TO PUMP BODY

(a) Align the stator shaft with each bolt hole.

(b) Torque the 11 bolts.

Torque: 10 N·m (100 kgf·cm, 7 ft·lbf)

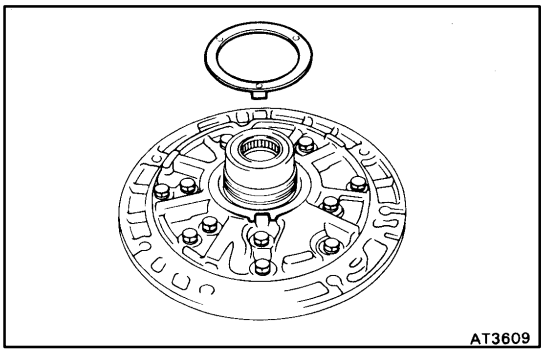

4. INSTALL THRUST WASHER

(a) Coat the thrust washer with petroleum jelly.

(b) Align the tab of the washer with the hollow of the pump body.

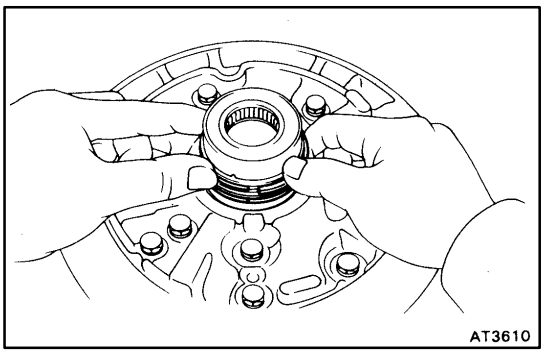

5. INSTALL OIL SEAL RINGS

Install the 2 oil seal rings to the stator shaft back side.

NOTICE: Do not spread the ring ends more than necessary.

HINT: After installing the oil seal rings, check that they move smoothly.

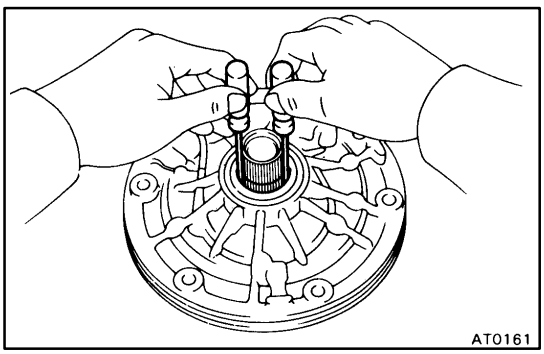

6. CHECK PUMP DRIVE GEAR ROTATION

Turn the drive gear with 2 screwdrivers and make sure it rotates smoothly.

NOTICE: Be careful not to damage the oil seal lip.

DIRECT CLUTCH

AX032–02

COMPONENTS

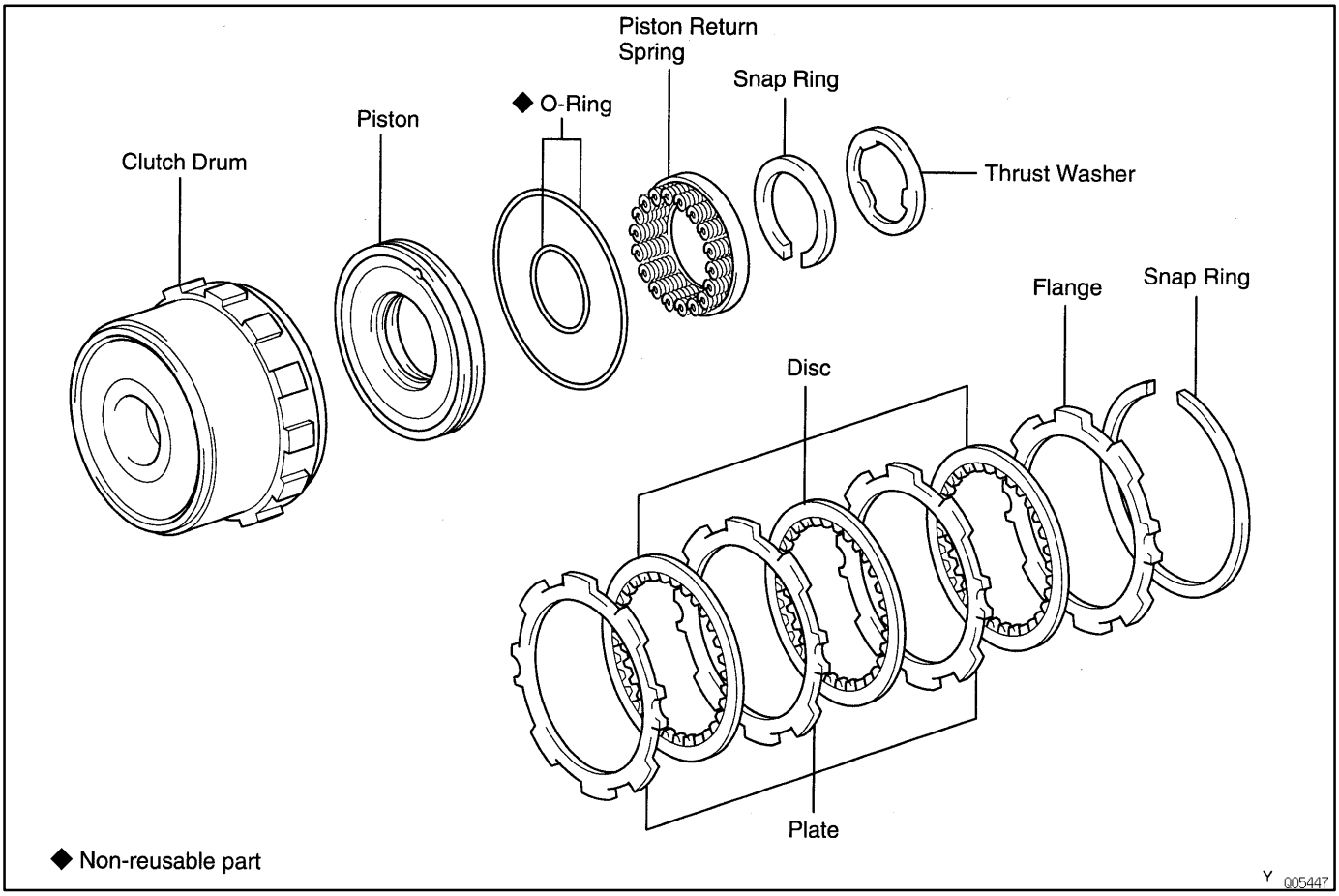

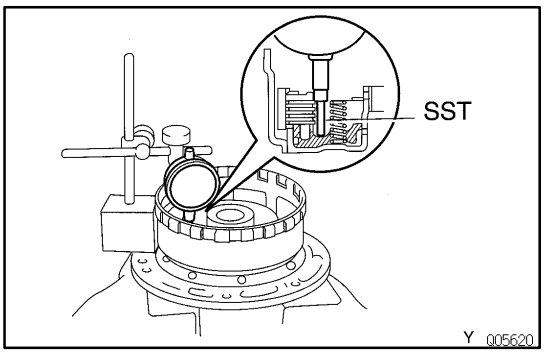

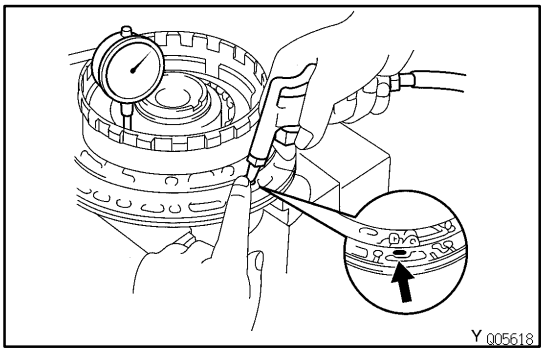

AX033–05

DIRECT CLUTCH DISASSEMBLY

1. CHECK PISTON STROKE OF DIRECT CLUTCH

(a) Install the direct clutch on the oil pump.

(b) Install a dial indicator and measuring terminal (SST) together, measure the direct clutch piston stroke while applying and releasing compressed air (392–785 kPa, 4–8 kg/cm^2, 57–114 psi).

SST 09350–32014 (09351–32190)

Piston stroke:

0.91–1.35 mm (0.0358–0.0531 in.)

If the piston stroke is greater than the maximum, inspect each component.

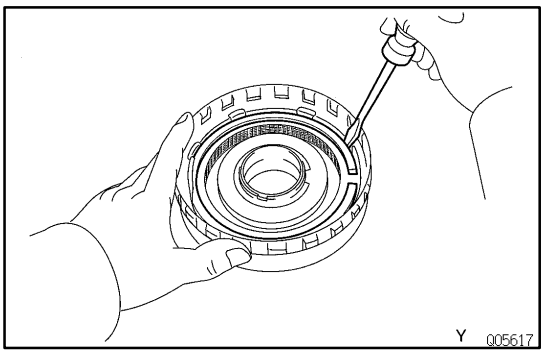

2. REMOVE SNAP RING FROM CLUTCH DRUM

3. REMOVE FLANGE, DISCS AND PLATES

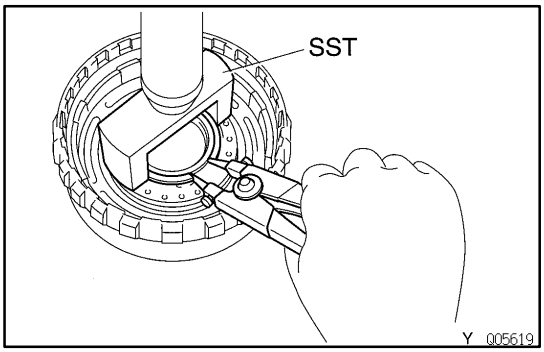

4. REMOVE PISTON RETURN SPRING

(a) Place SST on the spring retainer and compress the springs with a press.
SST 09350–32014 (09351–32070)

(b) Remove the snap ring with snap ring pliers.

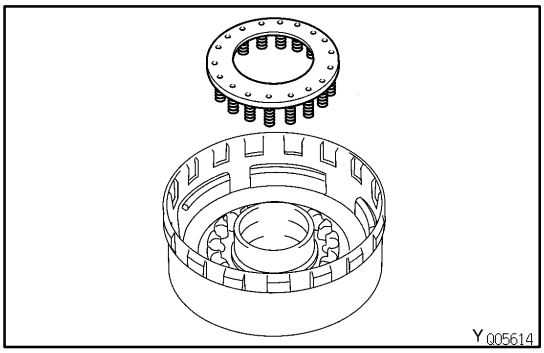

(c) Remove the piston return spring.

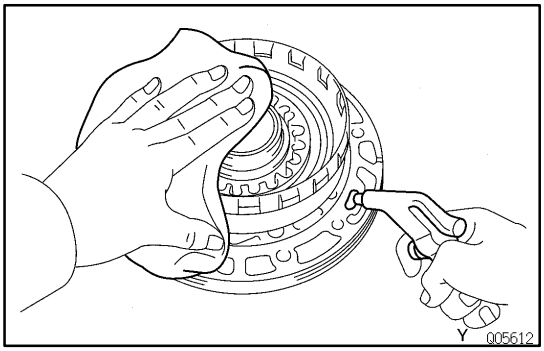

5. REMOVE CLUTCH PISTON

(a) Install the direct clutch onto the oil pump.

(b) Apply compressed air to the oil pump to remove the piston (if the piston does not come out completely, use needle–nose pliers to remove it).

(c) Remove the direct clutch from the oil pump.

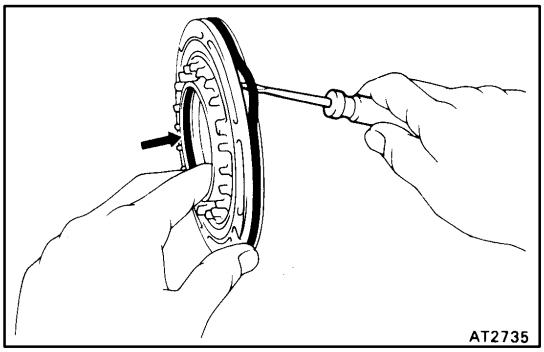

(d) Remove the 2 O–rings from the piston.

AX034–03

DIRECT CLUTCH INSPECTION

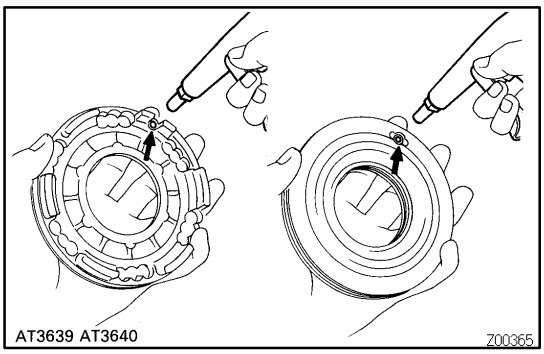

1. INSPECT CLUTCH PISTON

(a) Check that the check ball is free by shaking the piston.

(b) Check that the valve does not leak by applying low–pressure compressed air.

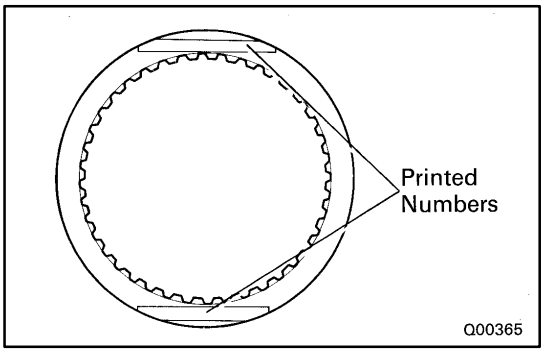

2. INSPECT DISCS, PLATES AND FLANGE

Check if the sliding surfaces of the discs, plates and flange are worn or burnt. If necessary, replace them.

HINT:

- If the lining of the disc is peeling off or discolored, or even if a part of the printed numbers are defaced, replace all discs.
- Before assembling new discs, soak them in ATF for at least 15 minutes.

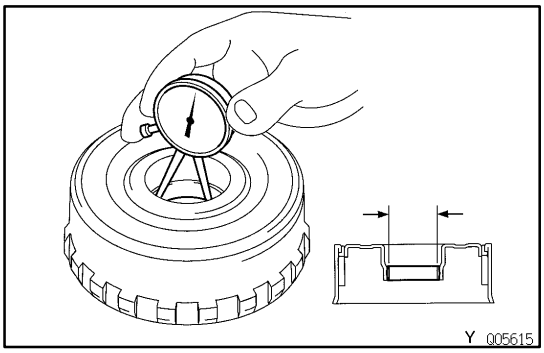

3. CHECK DIRECT CLUTCH BUSHING

Using a dial indicator, measure the inside diameter of the direct clutch bushing.

Maximum inside diameter:

48.27 mm (1.9004 in.)

If the inside diameter is greater than the maximum, replace the direct clutch.

AX035–06

DIRECT CLUTCH ASSEMBLY

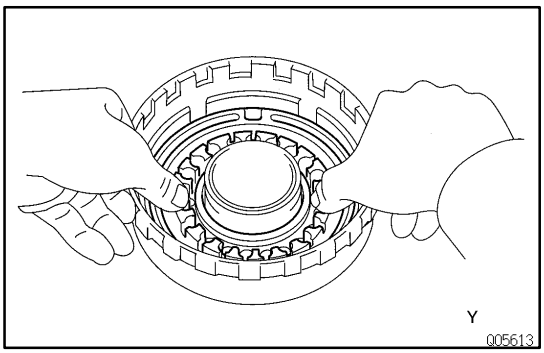

1. INSTALL CLUTCH PISTON IN DIRECT CLUTCH DRUM

(a) Install new O–rings to the piston. Coat the O–rings with ATF.

(b) Being careful not to damage the O–rings, press the piston into the drum with the cup side up.

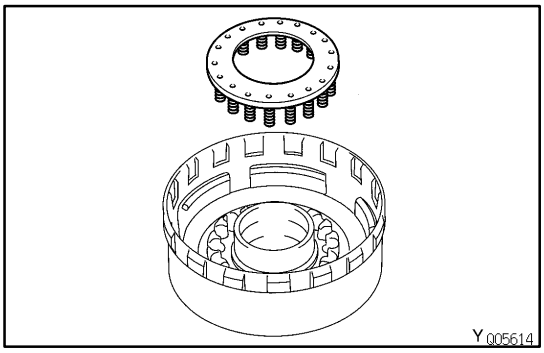

2. INSTALL PISTON RETURN SPRING

(a) Place the return spring and snap ring onto the piston.

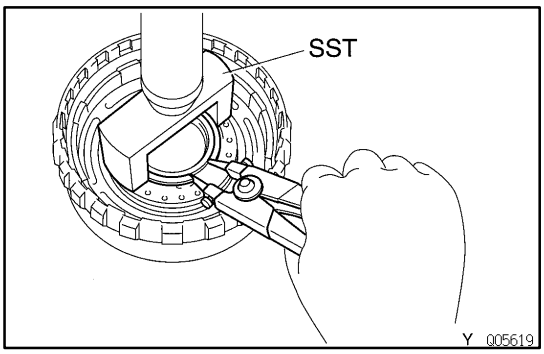

(b) Place SST on the spring retainer, and compress the return spring with a press.
SST 09350–32014 (09351–32070)
(c) Install the snap ring using snap ring pliers. Be sure the end gap of snap ring is aligned with the spring retainer claw.

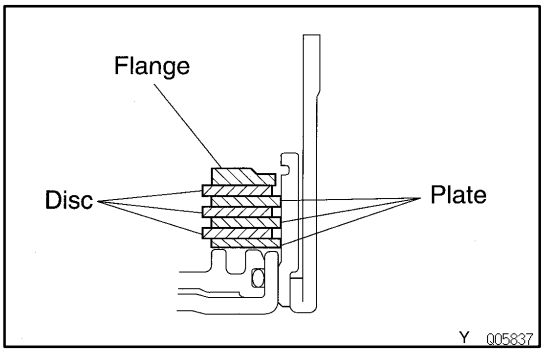

3. INSTALL PLATES, DISCS AND FLANGE

(a) Install plates and discs.
Install in order:
P=Plate D=Disc
P–D–P–D–P–D
(b) Install the flange with the flat end facing downward.

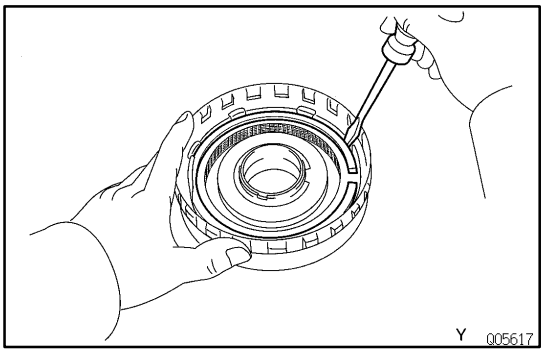

4. INSTALL SNAP RING

Check that the end gap of the snap ring is not aligned with one of the cutouts.

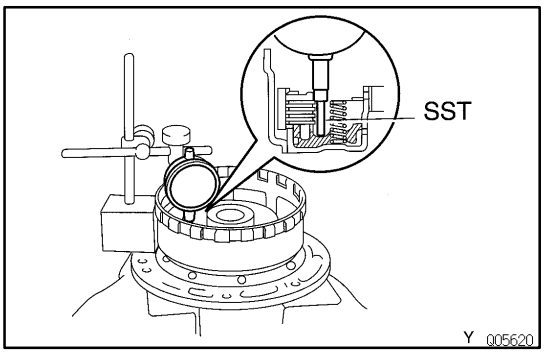

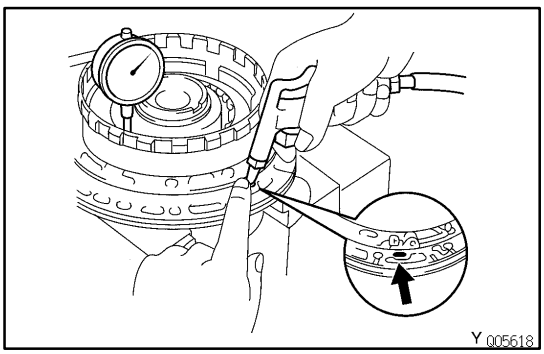

5. RECHECK PISTON STROKE OF DIRECT CLUTCH

(a) Install the direct clutch on the oil pump.
(b) Install a dial indicator and measuring terminal (SST) together, measure the direct clutch piston stroke while applying and releasing compressed air (392–785 kPa, 4–8 kgf/cm^2, 57–114 psi).
SST 09350–32014 (09351–32190)
Piston stroke:
0.91–1.35 mm (0.0358–0.0531 in.)
If the piston stroke is non–standard, select another flange.
HINT: There are 2 different thickness for the flange.
Flange thickness:
2.70 mm (0.1063 in.)
3.00 mm (0.1181 in.)

FORWARD CLUTCH

AX036–02

COMPONENTS

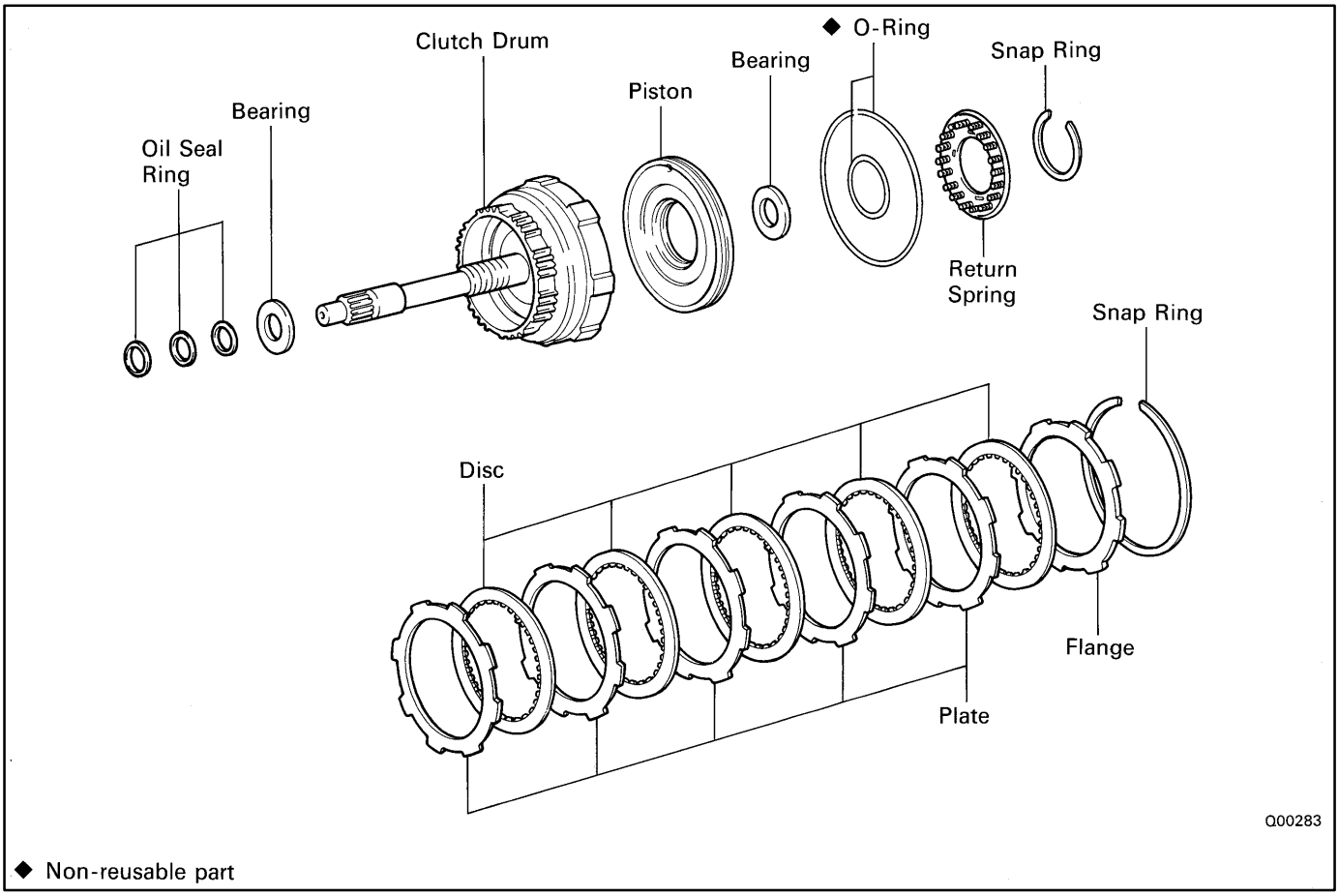

◆ Non-reusable part

AX037–04

FORWARD CLUTCH DISASSEMBLY

1. CHECK PISTON STROKE OF FORWARD CLUTCH

Install a dial indicator and measuring terminal (SST) together, measure the forward clutch piston stroke while applying and releasing compressed air (392–785 kPa, 4–8 kgf/cm^2, 57–114 psi).

SST 09350–32014 (09351–32190)

Piston stroke:

1.79–2.21 mm (0.0704–0.0870 in.)

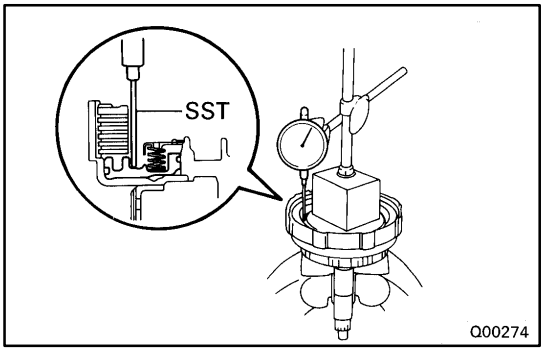

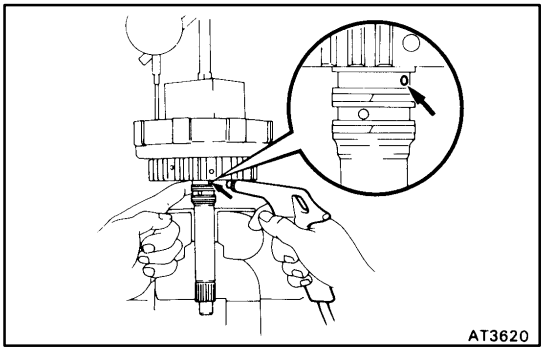

each component.

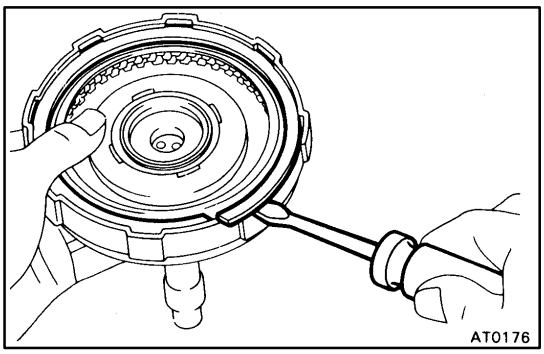

2. REMOVE SNAP RING FROM CLUTCH DRUM

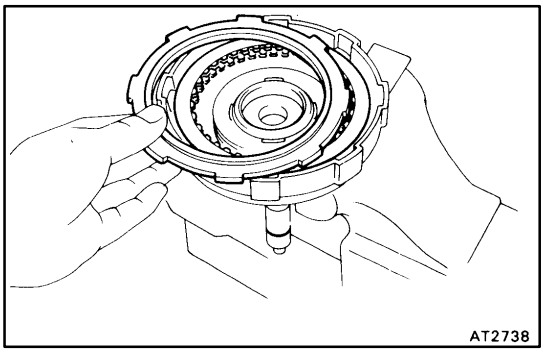

3. REMOVE FLANGE, DISCS AND PLATES

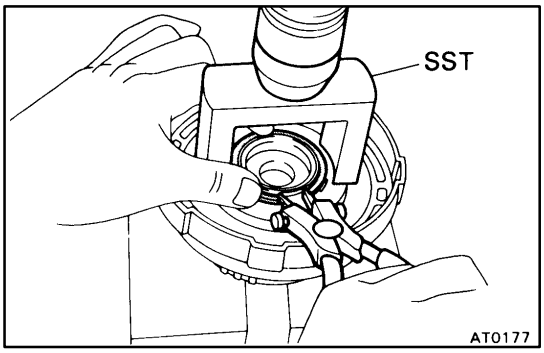

4. REMOVE RETURN SPRING

(a) Place SST on the spring retainer and compress the springs with a press.
SST 09350–32014 (09351–32070)

(b) Using snap ring pliers, remove the snap ring.

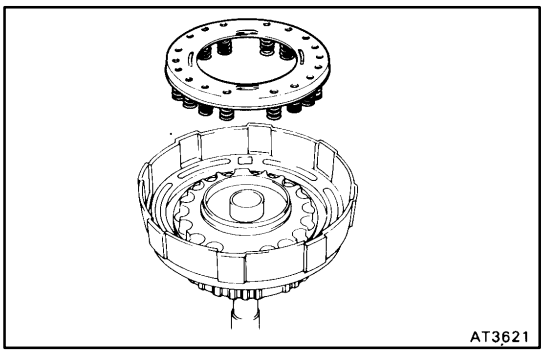

(c) Remove the return spring.

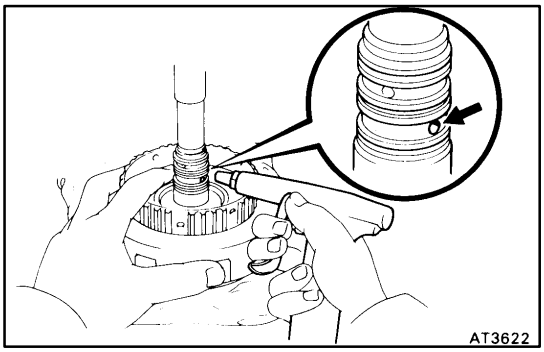

5. REMOVE CLUTCH PISTON

(a) Apply compressed air into the oil passage to remove the piston.
If the piston does not come out, use needle–nose pliers to remove it.

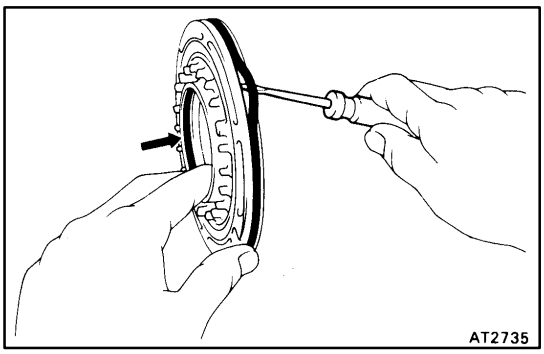

(b) Remove the 2 O–rings from the piston.

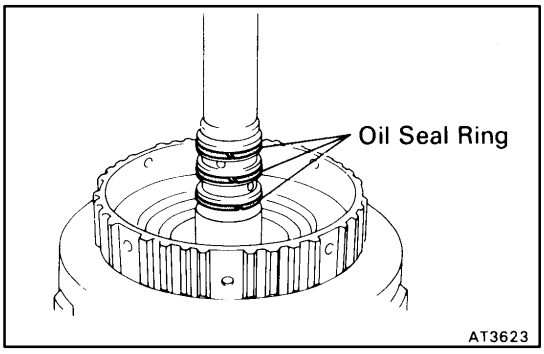

6. IF NECESSARY, REMOVE OIL SEAL RINGS

Remove the 3 oil seal rings from the shaft.

AX038–03

FORWARD CLUTCH INSPECTION

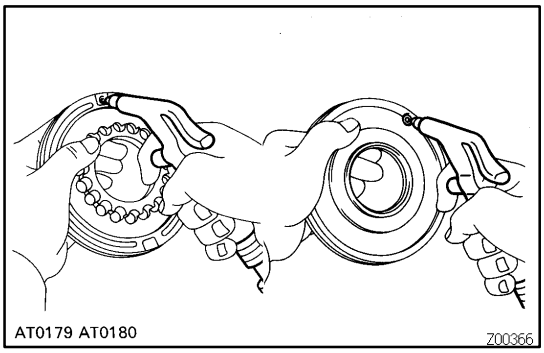

1. INSPECT CLUTCH PISTON

(a) Check that the check ball is free by shaking the piston.

(b) Check that the valve does not leak by applying low–pressure compressed air.

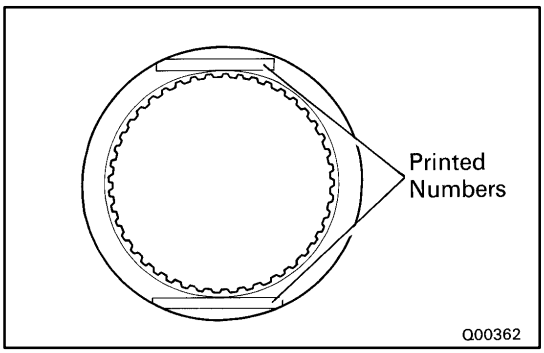

2. INSPECT DISCS, PLATES AND FLANGE

Check if the sliding surfaces of the discs, plates and flange are worn or burnt. If necessary, replace them.

HINT:

- If the lining of the disc is peeling off or discolored, or even if a part of the printed numbers are defaced, replace all discs.
- Before assembling new discs, soak them in ATF for at least 15 minutes.

AX039–04

FORWARD CLUTCH ASSEMBLY

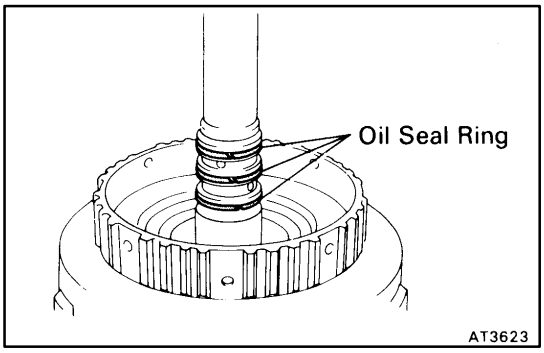

1. INSTALL OIL SEAL RINGS

Install the 3 oil seal rings to the shaft.

NOTICE: Do not spread the ring ends more than necessary.

HINT: After installing the oil seal rings, check that they move smoothly.

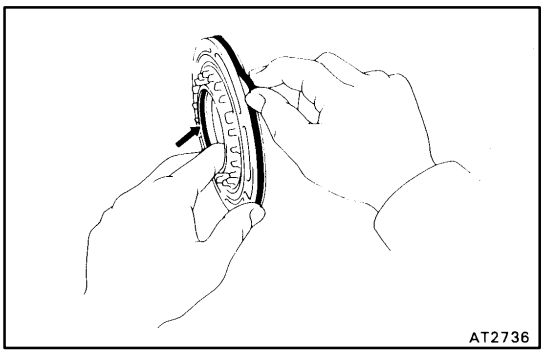

2. INSTALL CLUTCH PISTON TO CLUTCH DRUM

(a) Install the 2 new O–rings to the piston.

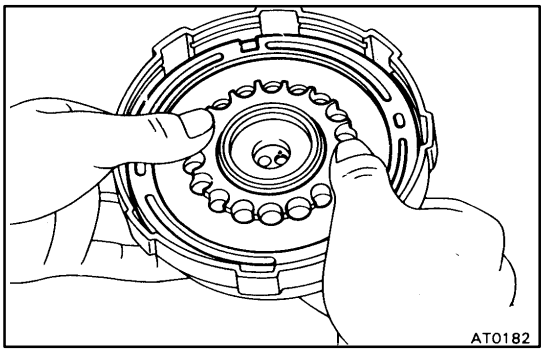

(b) Coat the O–ring with ATF.

(c) Press the piston into the drum with the cup side up, being careful not to damage the O–rings.

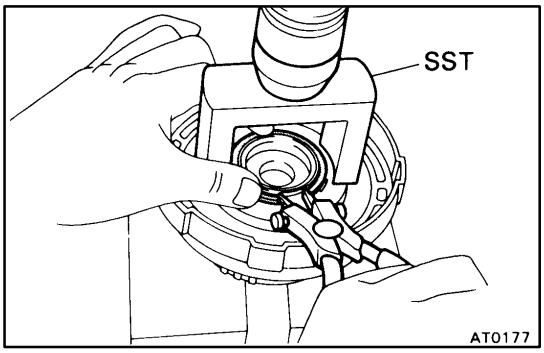

3. INSTALL PISTON RETURN SPRINGS

(a) Place the return spring and snap ring onto the piston.

(b) Place SST on the spring retainer, and compress the springs with a press.
SST 09350–32014 (09351–32070)

(c) Install the snap ring with snap ring pliers.
Be sure the end gap of the snap ring is not aligned with the spring retainer claw.

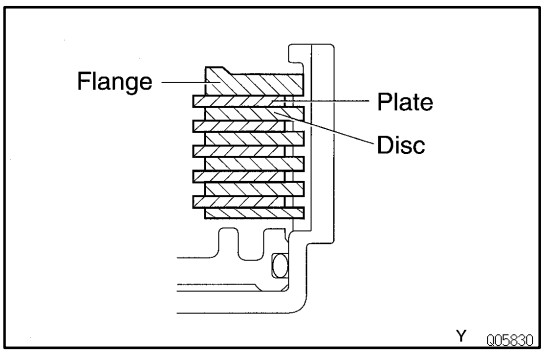

4. INSTALL PLATES, DISCS AND FLANGE

(a) Install the plates and discs.
Install in order:
P=Plate D=Disc
P–D–P–D–P–D–P–D–P–D

(b) Install the flange with the flat end facing downward.

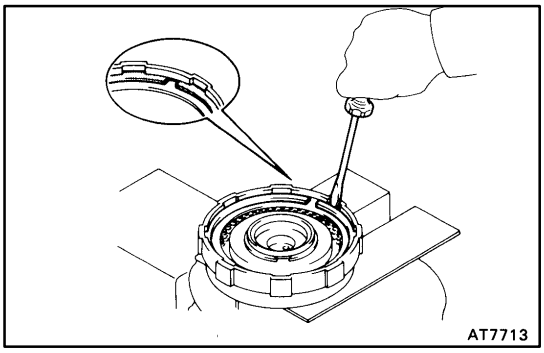

5. INSTALL SNAP RING

Check that the end gap of snap ring is not aligned with one of the cutouts.

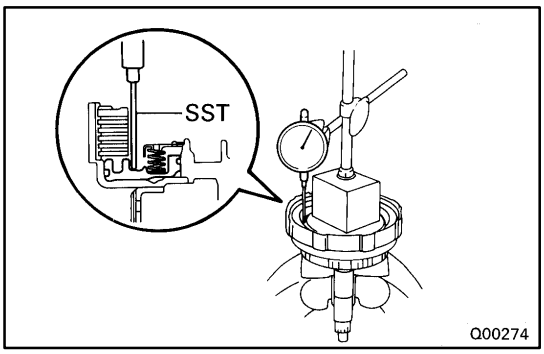

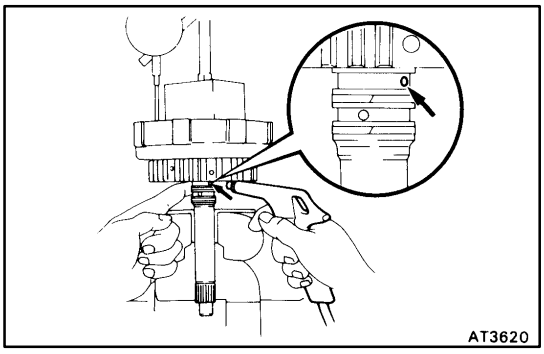

6. RECHECK PISTON STROKE OF FORWARD CLUTCH

Install a dial indicator and measuring terminal (SST) together, measure the forward clutch piston stroke while applying and releasing compressed air (392–785 kPa, 4–8 kgf/cm^2, 57–114 psi).

SST 09350–32014 (09351–32190)

Piston stroke:

1.79–2.21 mm (0.0704–0.0870 in.)

If the piston stroke is non–standard, select another flange.

HINT: There are 2 different thicknesses for the flange.

Flange thickness:

2.30 mm (0.0906 in.)

2.70 mm (1.0630 in.)

FRONT PLANETARY GEAR

AX03A–02

COMPONENTS

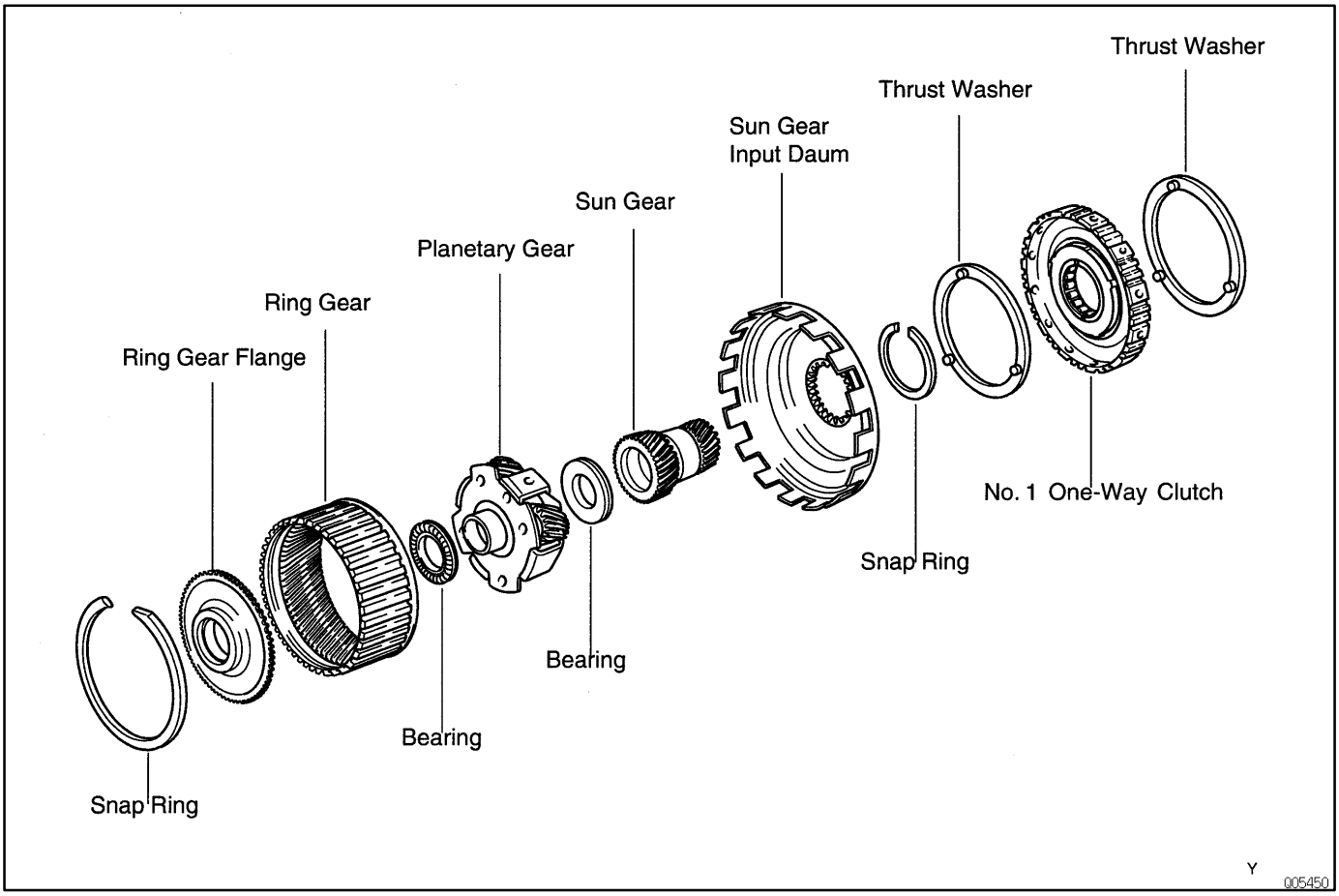

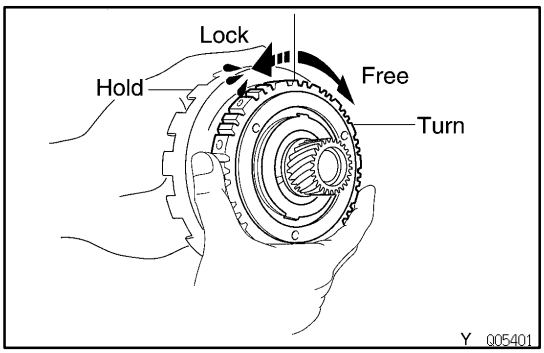

AX0TU–03

NO.1 ONE–WAY CLUTCH AND SUN GEAR DISASSEMBLY

1. CHECK OPERATION OF NO.1 ONE–WAY CLUTCH

Hold the sun gear and turn the hub. The hub should turn freely clockwise and should lock counterclockwise.

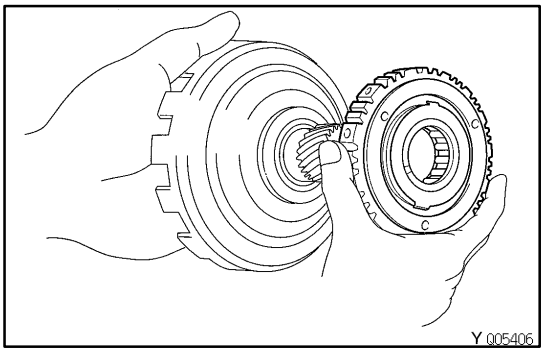

2. REMOVE NO.1 ONE–WAY CLUTCH FROM SUN GEAR

While turning the hub clockwise, remove the No.1 one–way clutch from the sun gear.

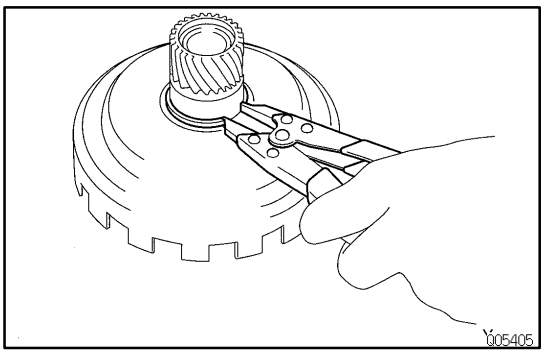

3. REMOVE SUN GEAR FROM DRUM

(a) Using snap ring pliers, remove the snap ring from the drum.

(b) Remove the sun gear from the drum.

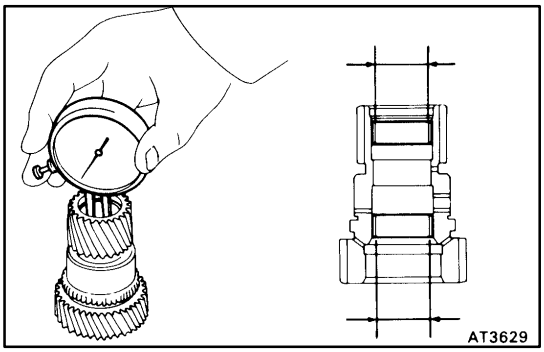

4. CHECK SUN GEAR BUSHINGS

Using a dial indicator, measure the inside diameter of the sun gear bushings.

Maximum inside diameter:

22.59 mm (0.8894 in.)

If the inside diameter is greater than the maximum, replace the sun gear.

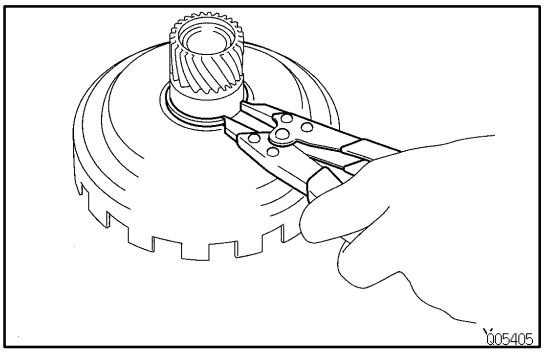

NO.1 ONE–WAY CLUTCH AND SUN GEAR ASSEMBLY

AX0TV–01

1. INSTALL SUN GEAR TO DRUM

(a) Install the sun gear to the drum.

(b) Using snap ring pliers, install the snap ring to drum.

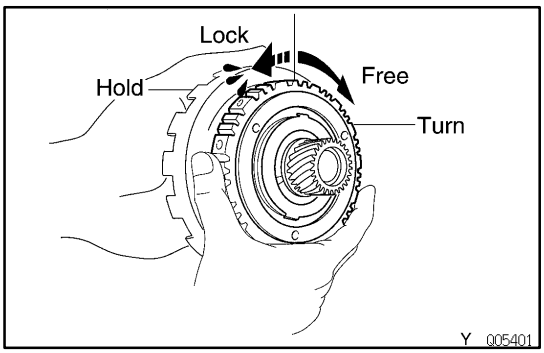

2. INSTALL NO.1 ONE–WAY CLUTCH ON SUN GEAR

While turning the hub clockwise, slide the No.1 one–way clutch onto the sun gear.

3. RECHECK OPERATION OF NO.1 ONE–WAY CLUTCH

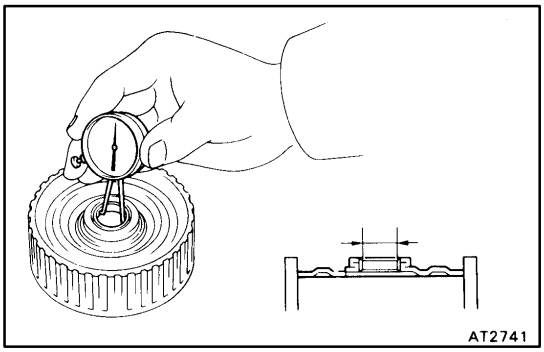

PLANETARY RING GEAR INSPECTION

AX03D–02

1. INSPECT RING GEAR FLANGE BUSHING

Using a dial indicator, measure the inside diameter of the flange bushing.

Maximum inside diameter:

30.08 mm (1.1842 in.)

If the inside diameter is greater than the maximum, replace the flange.

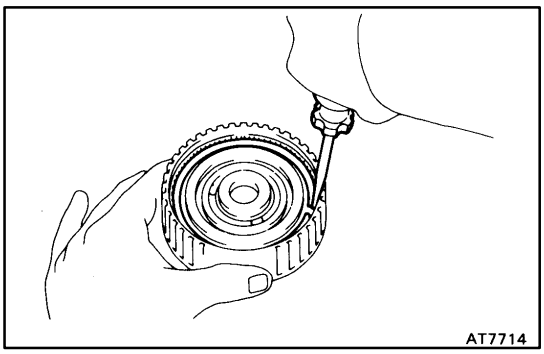

2. REMOVE RING GEAR FLANGE

(a) Using a screwdriver, remove the snap ring.

(b) Remove the flange from the ring gear.

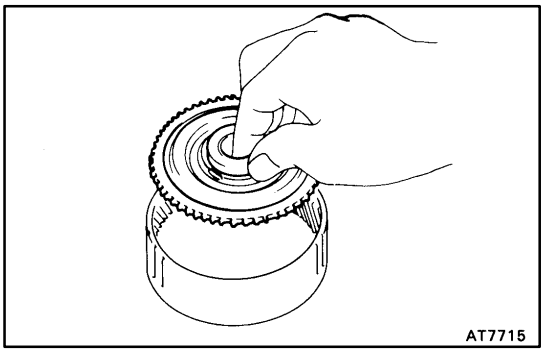

3. INSTALL RING GEAR FLANGE

(a) Position the flange into the ring gear.

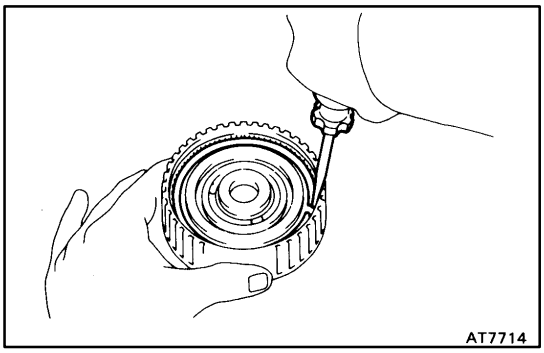

(b) Using a screwdriver, install the snap ring.

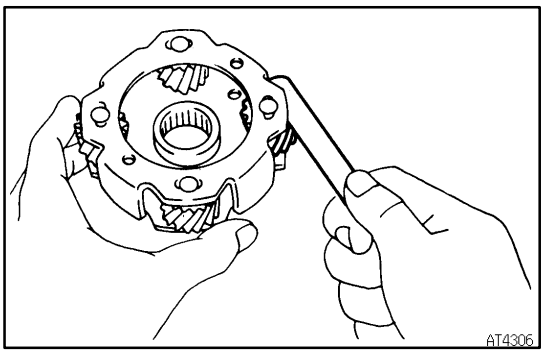

FRONT PLANETARY GEAR INSPECTION AX03E–03

MEASURE PLANETARY PINION GEAR THRUST CLEARANCE

Using a feeler gauge, measure the planetary pinion gear thrust clearance.

Standard clearance:

0.16–0.56 mm (0.0063–0.0220 in.)

Maximum clearance:

0.61 mm (0.0240 in.)

If the clearance is greater than the maximum, replace the planetary gear assembly.

SECOND BRAKE
COMPONENTS

AX03F–02

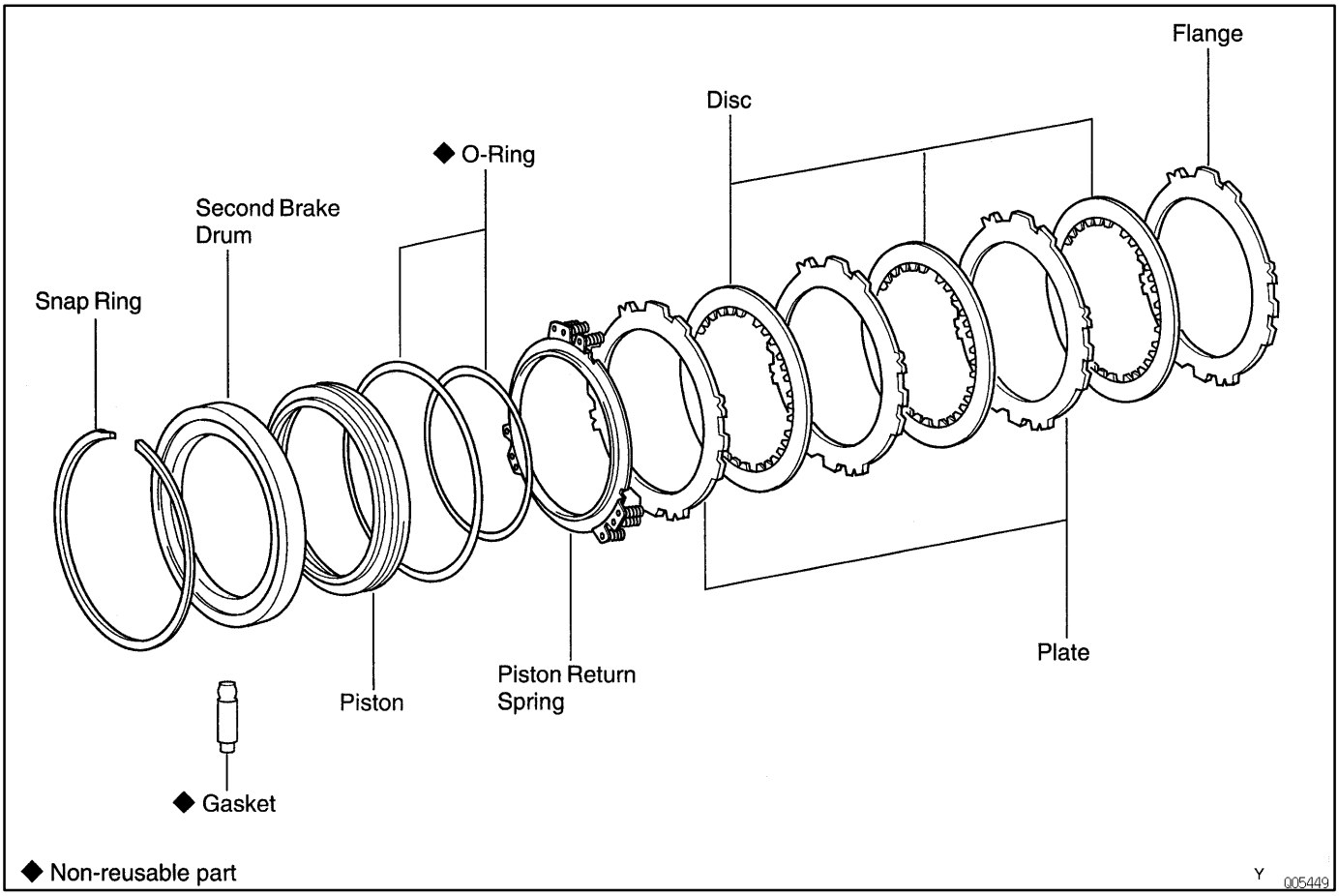

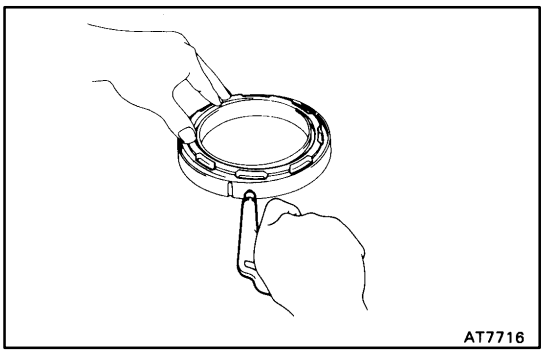

SECOND BRAKE PISTON DISASSEMBLY

AX03G–03

REMOVE SECOND BRAKE PISTON

(a) Apply compressed air to the oil hole to remove the piston.

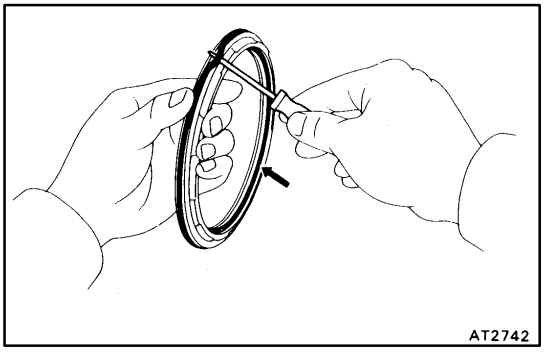

(b) Remove the 2 O–rings from the piston.

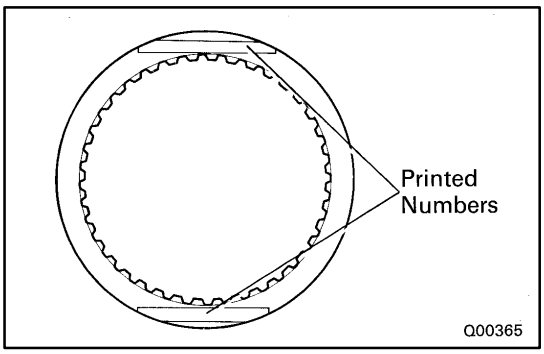

AX03H–03

SECOND BRAKE COMPONENT INSPECTION

INSPECT DISCS, PLATES AND FLANGE

Check if the sliding surfaces of the discs, plates and flange are worn or burnt. If necessary, replace them.

HINT:

- If the lining of the disc is peeling off or discolored, or even if a part of the printed numbers are defaced, replace all discs.
- Before assembling new discs, soak them in ATF for at least 15 minutes.

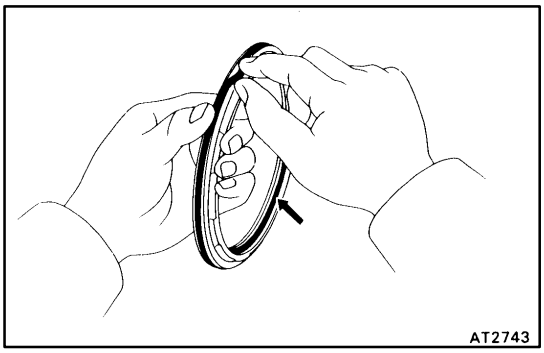

AX03J–06

SECOND BRAKE PISTON ASSEMBLY

INSTALL PISTON

(a) Coat a new O–ring with ATF.

(b) Install the 2 new O–rings on the piston.

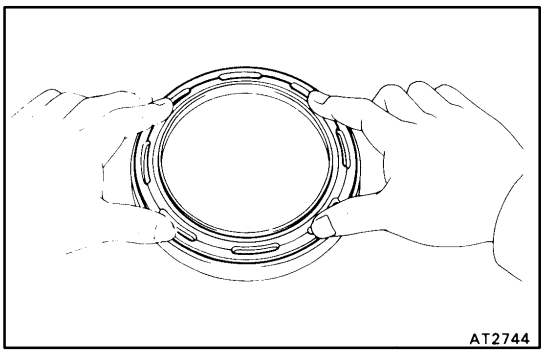

(c) Press the piston into the drum, being careful not to damage the O–rings.

REAR PLANETARY GEAR

AX03K–02

COMPONENTS

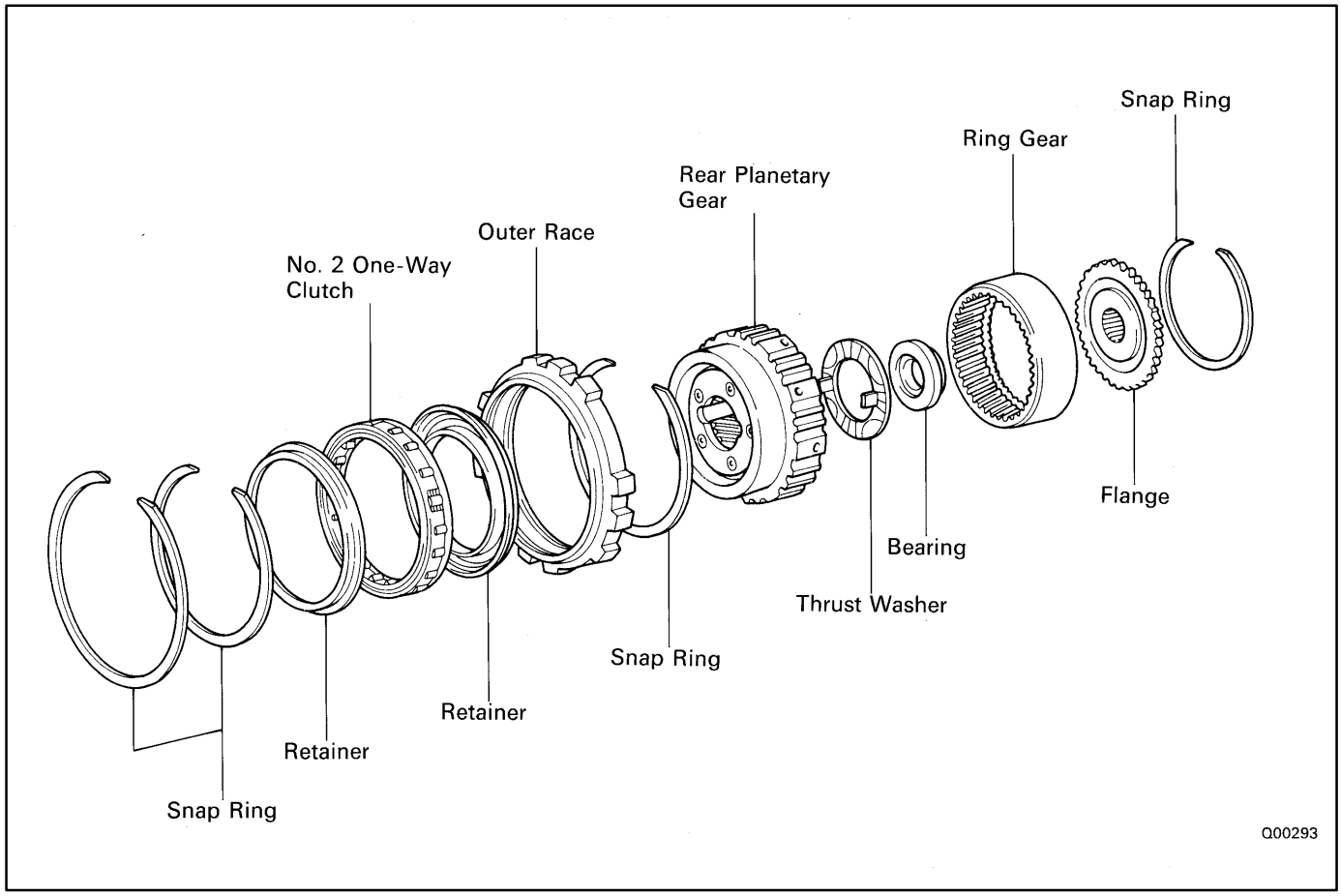

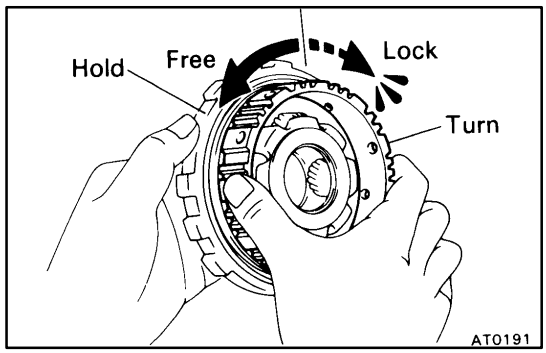

NO.2 ONE–WAY CLUTCH DISASSEMBLY

AX03L–02

1. CHECK OPERATION OF NO.2 ONE–WAY CLUTCH

Hold the outer race and turn the rear planetary gear. The rear planetary gear should turn freely counterclockwise and should lock clockwise.

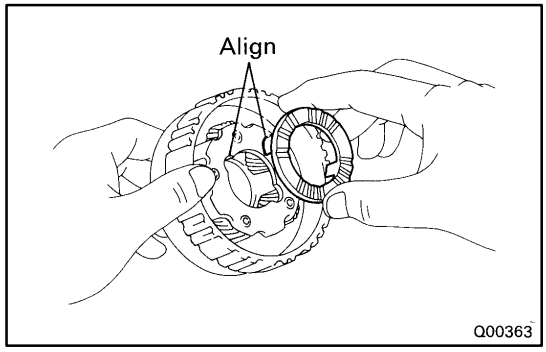

2. SEPARATE NO.2 ONE–WAY CLUTCH AND REAR PLANETARY GEAR

3. REMOVE THRUST WASHER

Remove the thrust washer from the rear side of planetary gear.

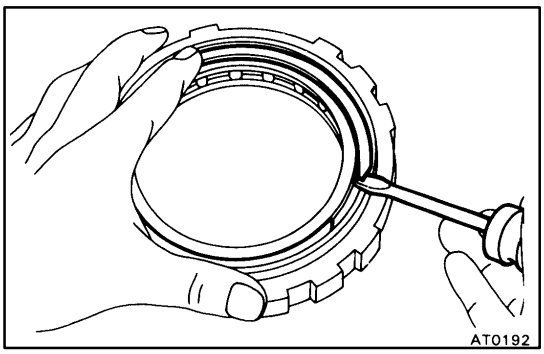

4. REMOVE NO.2 ONE–WAY CLUTCH FROM OUTER RACE

(a) Remove the 2 snap rings and retainers from both sides.

(b) Remove the No.2 one–way clutch from the outer race.

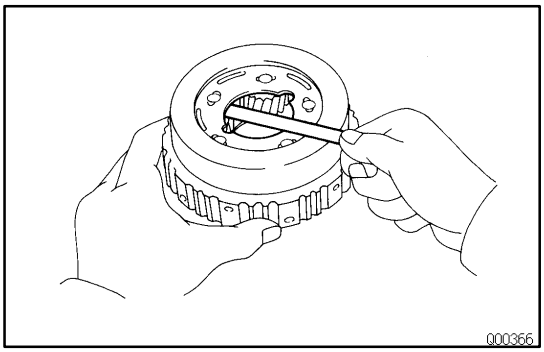

REAR PLANETARY GEAR INSPECTION

AX03M–03

MEASURE PLANETARY PINION GEAR THRUST CLEARANCE

Using a feeler gauge, measure the planetary pinion gear thrust clearance.

Standard clearance:

0.16–0.56 mm (0.0063–0.0220 in.)

Maximum clearance:

0.61 mm (0.0240 in.)

If the clearance is greater than the maximum, replace the planetary gear assembly.

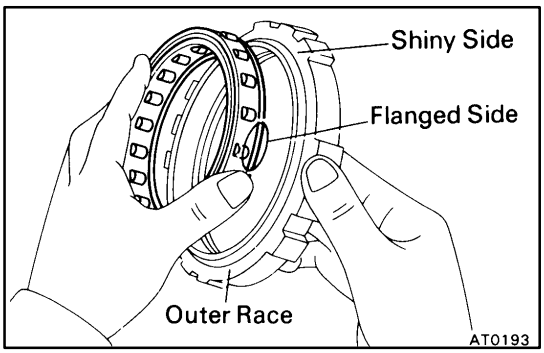

NO.2 ONE–WAY CLUTCH ASSEMBLY

AX03N–02

1. INSTALL ONE–WAY CLUTCH

(a) Install the No.2 one–way clutch into the outer race, facing the flange side of the No.2 one–way clutch toward the shiny side of the outer race.

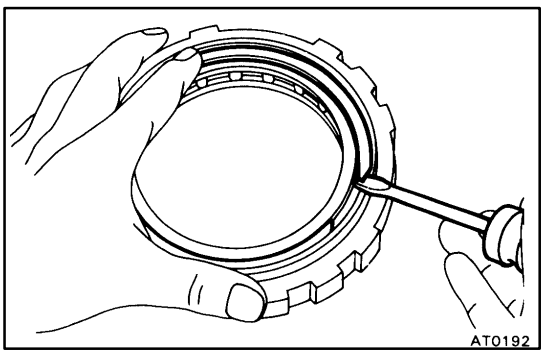

(b) Install the 2 retainers and snap rings to both sides.

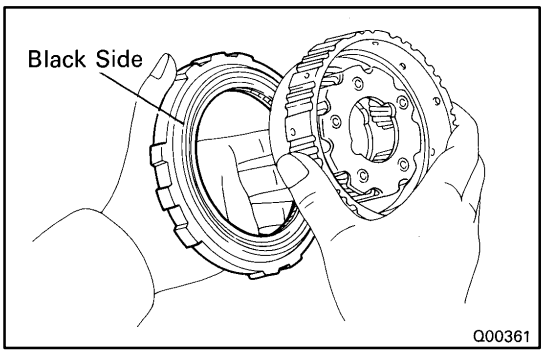

2. INSTALL PLANETARY GEAR INTO NO.2 ONE–WAY CLUTCH

Install the planetary gear into the No.2 one–way clutch, facing the inner race of the rear planetary gear toward the black side of the No.2 one–way clutch outer race.

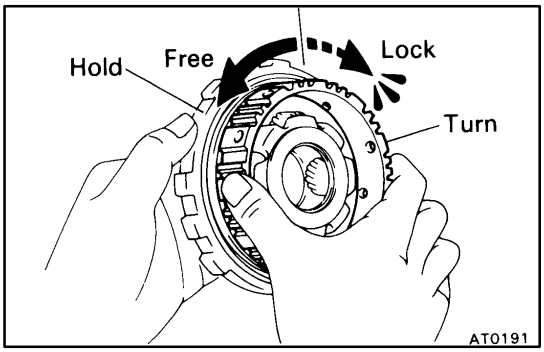

3. CHECK OPERATION OF NO.2 ONE–WAY CLUTCH

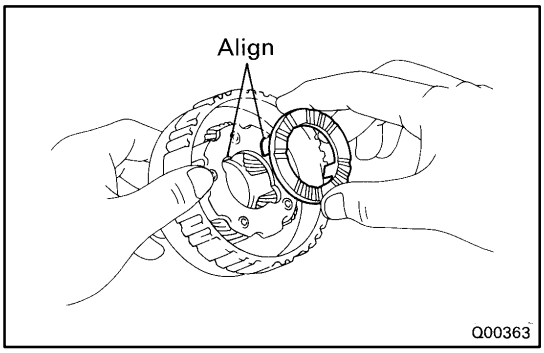

4. INSTALL THRUST WASHER

(a) Coat the thrust washer with petroleum jelly.
(b) Align the tab of the washer with the hollows of the carrier.

AX03P–02

RING GEAR FLANGE REPLACEMENT

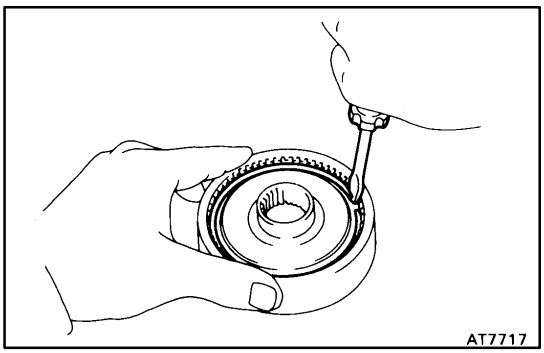

1. REMOVE RING GEAR FLANGE

(a) Using a screwdriver, remove the snap ring.
(b) Remove the flange from the ring gear.

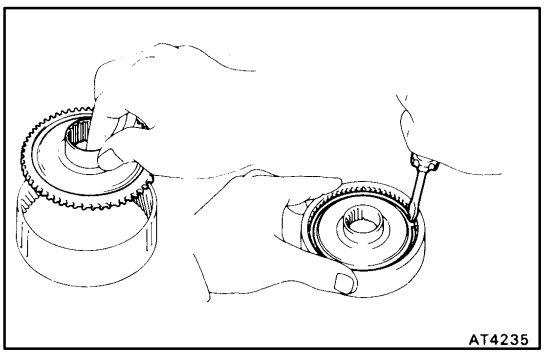

2. INSTALL RING GEAR FLANGE

(a) Position the flange into the ring gear.
(b) Using a screwdriver, install the snap ring.

FIRST AND REVERSE BRAKE

AX03Q–02

COMPONENTS

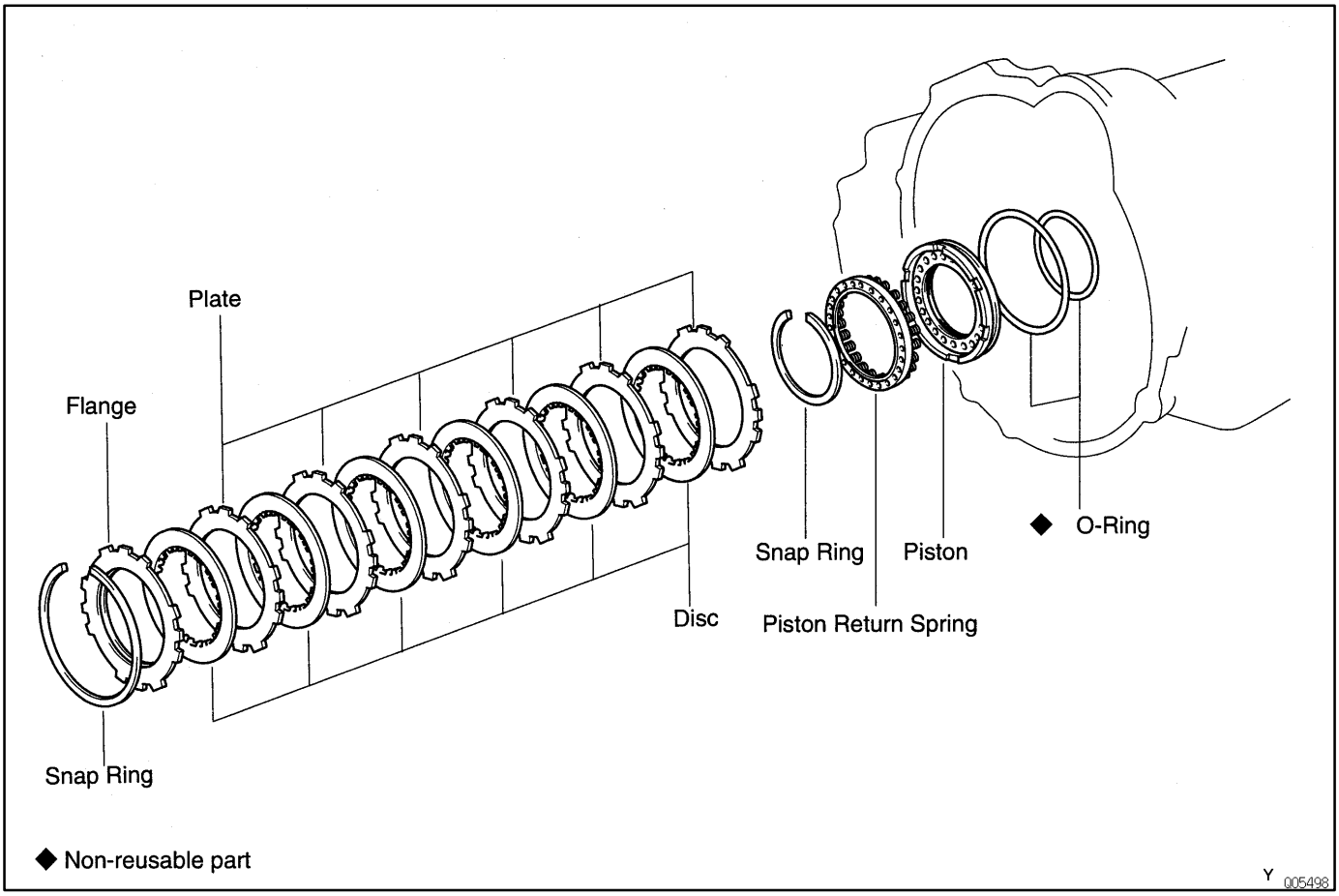

AX03R–03

FIRST AND REVERSE BRAKE COMPONENTS INSPECTION

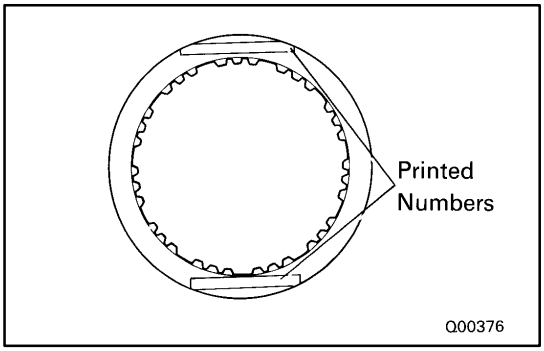

INSPECT DISCS, PLATES AND FLANGES

Check if the sliding surfaces of the discs, plates and flanges are worn or burnt. If necessary, replace them.

HINT:

- If the lining of the disc is peeling off or discolored, or even if a part of the printed numbers are defaced, replace all discs.
- Before assembling new discs, soak them in ATF for at least 15 minutes.

OVERDRIVE UNIT
COMPONENTS

AX03S–02

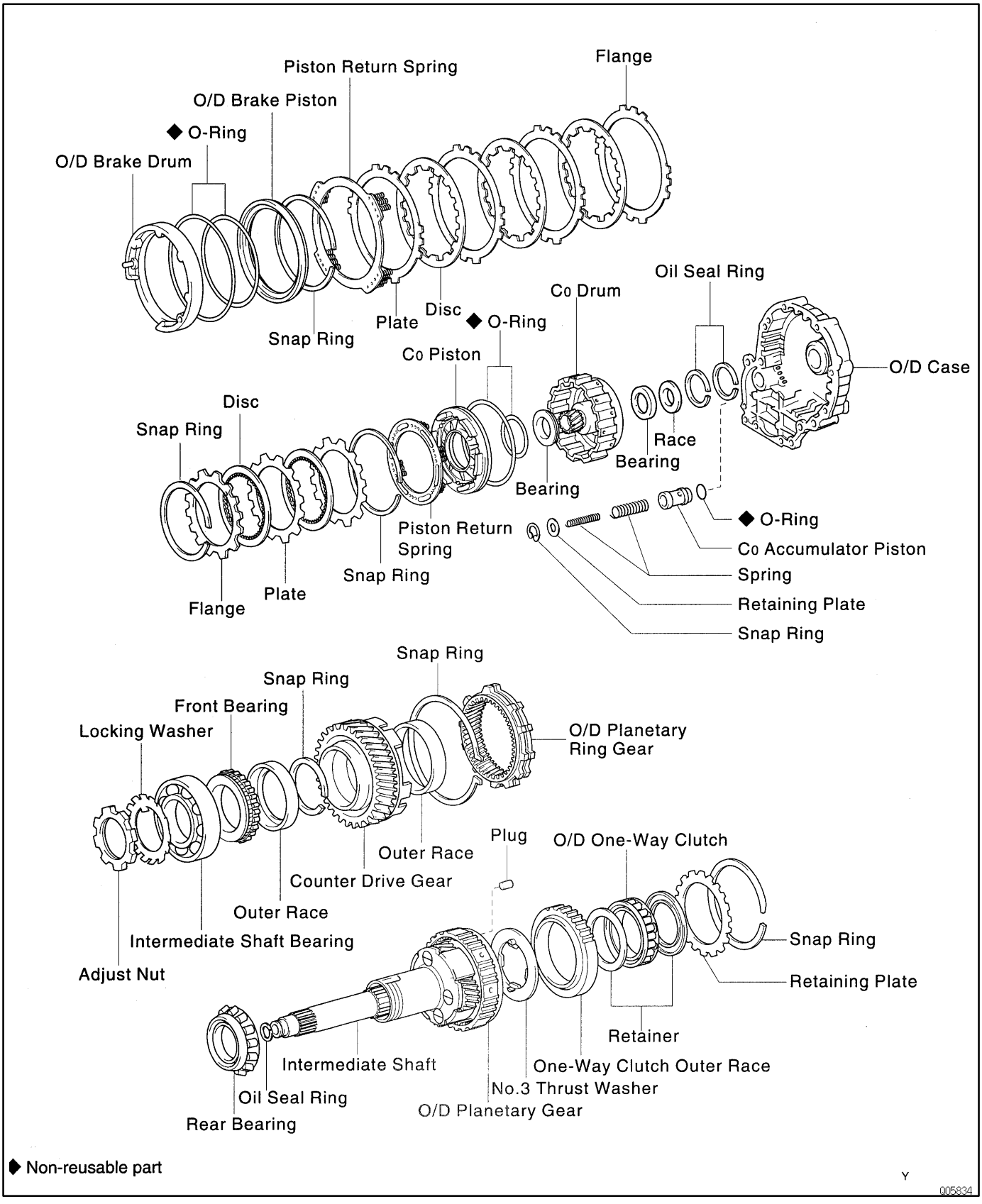

◆ Non-reusable part

Y

005834

AX03T–03

OVERDRIVE BRAKE DISASSEMBLY

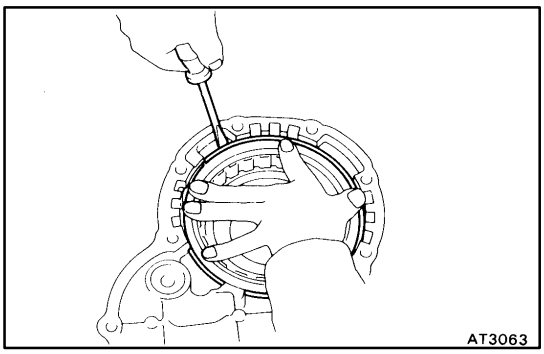

1. REMOVE PISTON RETURN SPRING

(a) While pushing the return spring, remove the snap ring with a screwdriver.

(b) Remove the piston return spring.

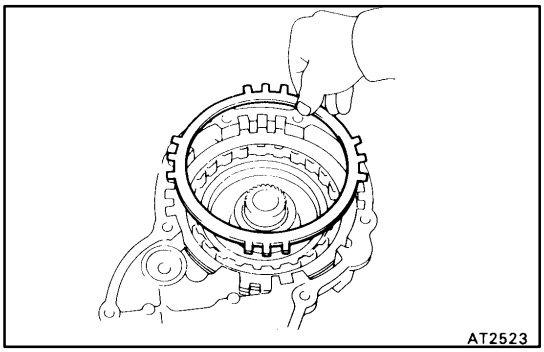

2. REMOVE PLATES, DISCS AND FLANGE

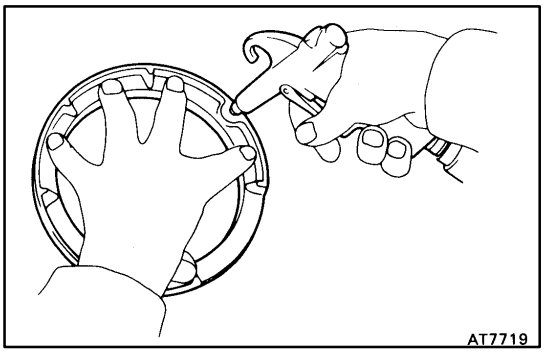

3. REMOVE PISTON FROM DRUM

Apply compressed air to oil hole to remove the piston.

HINT: Blow with the gun slightly away from the oil hole, and be careful that the piston does not tilt.

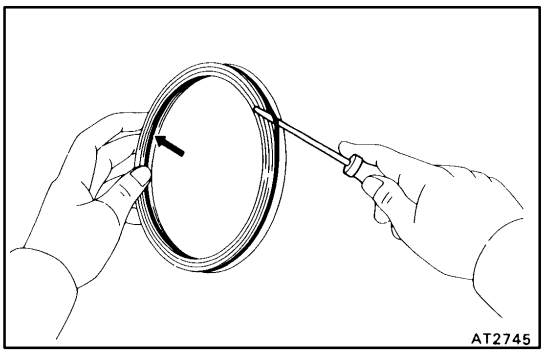

4. REMOVE O–RINGS

Remove the inner and outer O–rings from the piston.

AX03U–03

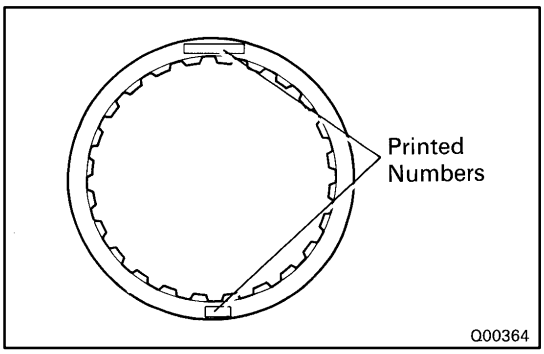

OVERDRIVE BRAKE INSPECTION

INSPECT DISCS, PLATES AND FLANGE

Check if the sliding surfaces of the discs, plates and flange are worn or burnt. If necessary, replace them.

HINT:

- If the lining of the disc is peeling off or discolored, or even if a part of the printed numbers are defaced, replace all discs.
- Before assembling new discs, soak them in ATF for at least 15 minutes.

AX03V–05

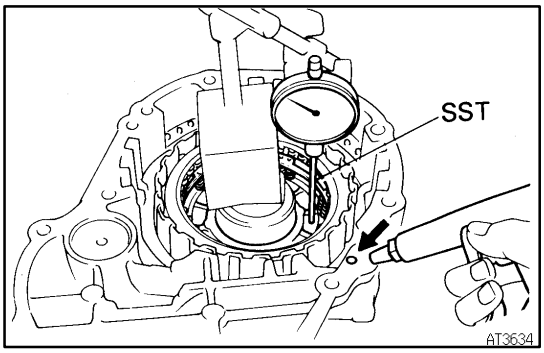

OVERDRIVE DIRECT CLUTCH DISASSEMBLY

1. CHECK PISTON STROKE OF DIRECT CLUTCH

Install a dial indicator and measuring terminal (SST) together, measure the piston stroke while applying and releasing compressed air (392–785 kPa, 5–8 kgf/cm^2, 57–114 psi).

Piston stroke:

1.75–2.49 mm (0.0689–0.0980 in.)

SST 09350–32014 (09351–32190)

If the piston stroke is greater than the maximum, inspect each component.

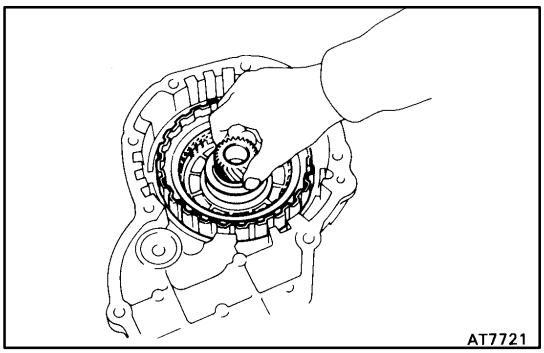

2. REMOVE OVERDRIVE DIRECT CLUTCH FROM CASE

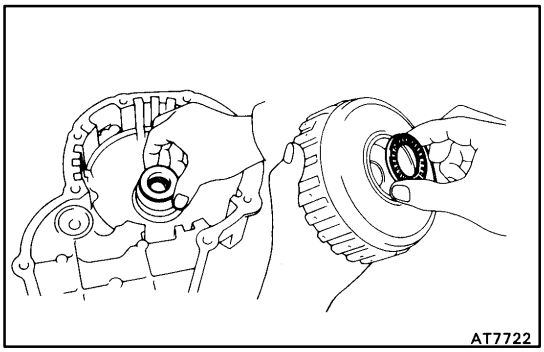

3. REMOVE BEARING AND RACE FROM CLUTCH DRUM AND CASE

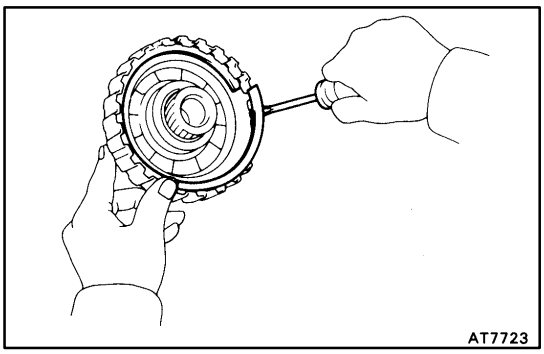

4. REMOVE SNAP RING WITH SCREWDRIVER

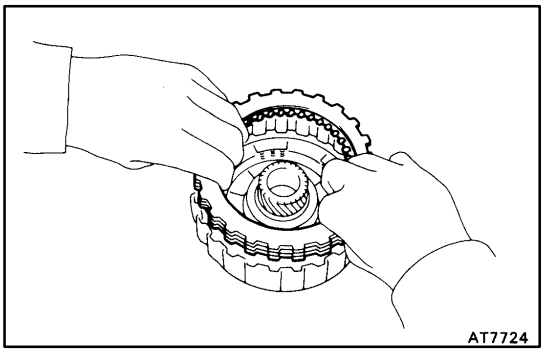

5. REMOVE FLANGES, DISCS AND PLATES

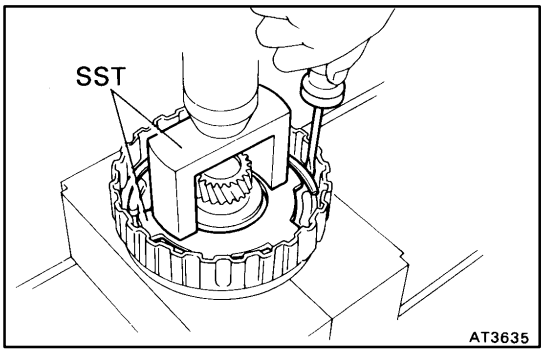

6. REMOVE PISTON RETURN SPRING

(a) Place SST on the spring retainer and compress the spring with a press.
SST 09350–32014 (09351–32070, 09351–32200)

(b) Remove the snap ring.

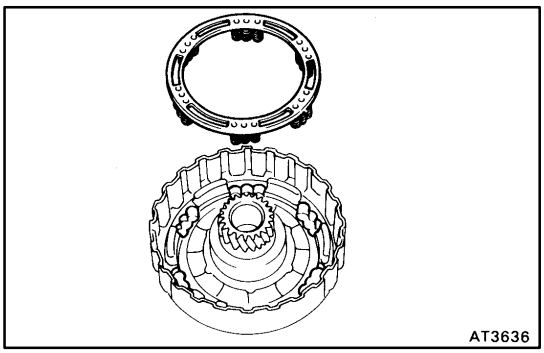

(c) Remove the piston return spring.

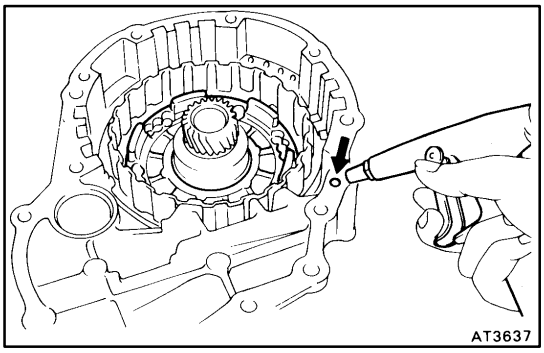

7. REMOVE PISTON FROM CLUTCH DRUM

(a) Install the clutch drum on the case.

(b) Apply compressed air to the pressure apply hole of the case.

(c) Remove the piston from the clutch drum.
If the piston does not come out completely, use needle–nose pliers to remove it.

(d) Remove the clutch drum from the case.

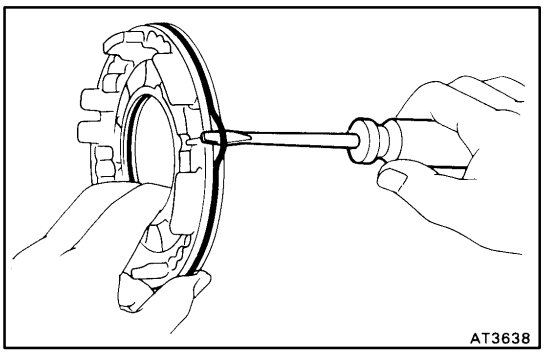

8. REMOVE O–RINGS

Remove the 2 O–rings from the piston.

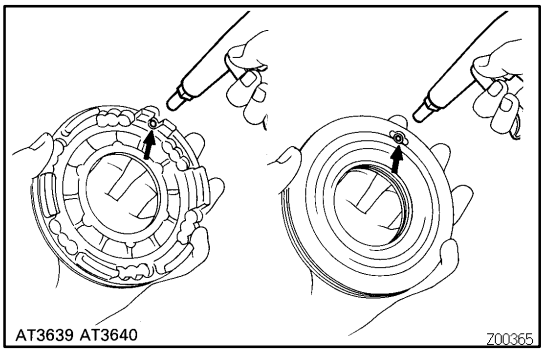

OVERDRIVE DIRECT CLUTCH INSPECTION

AX03W–03

1. INSPECT OVERDRIVE DIRECT CLUTCH

(a) Check that the check ball is free by shaking the piston.

(b) Check that the valve does not leak by applying low–pressure compressed air.

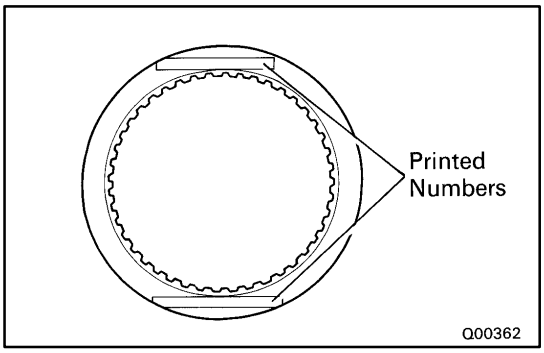

2. INSPECT DISCS, PLATES AND FLANGES

Check if the sliding surfaces of the discs, plates and flanges are worn or burnt. If necessary, replace them.

HINT:

- If the lining of the disc is peeling off or discolored, or even if a part of the printed numbers are defaced, replace all discs.
- Before assembling new discs, soak them in ATF for at least 15 minutes.

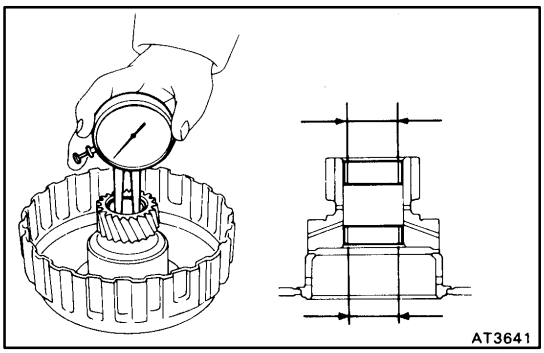

3. CHECK DIRECT CLUTCH BUSHING

Using a dial indicator, measure the inside diameter of the 2 direct clutch bushings.

Maximum inside diameter:

22.13 mm (0.8713 in.)

If the inside diameter is greater than the maximum, replace the direct clutch drum.

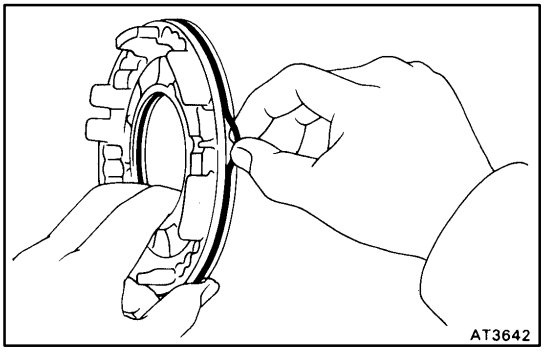

OVERDRIVE DIRECT CLUTCH ASSEMBLY

AX03X–06

1. INSTALL CLUTCH PISTON

(a) Install new O–rings to the piston. Coat the O–rings with ATF.

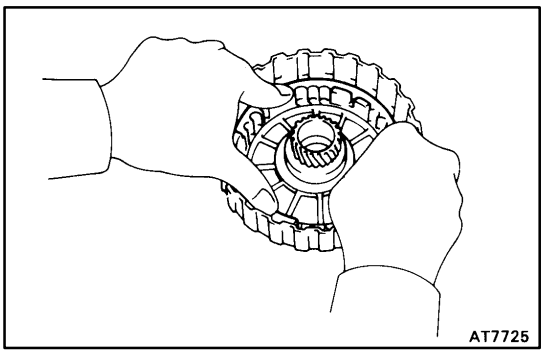

(b) Press the piston into the drum with the cup side up, being careful not to damage the O–ring.

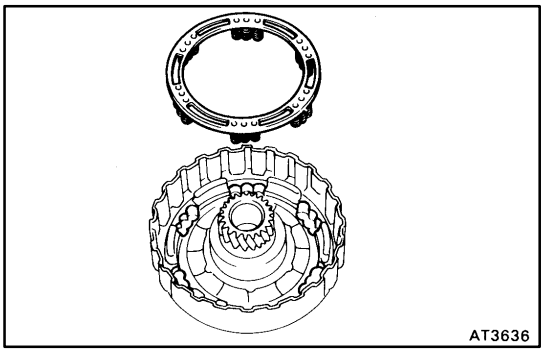

2. INSTALL PISTON RETURN SPRING

(a) Install the return spring and seat snap ring in place.

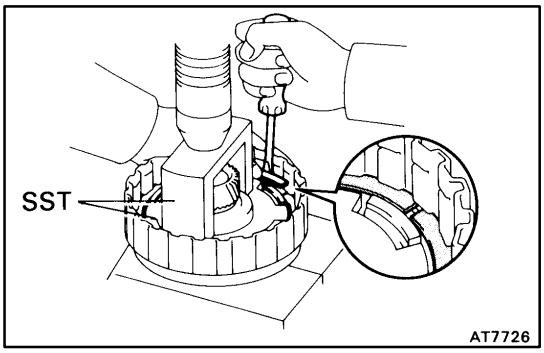

(b) Place SST on the spring retainer, and compress the spring with a press.
SST 09350–32014 (09351–32070, 09351–32200)

(c) Install the snap ring with a screwdriver. Be sure end gap of snap ring is aligned with the groove of the clutch drum.

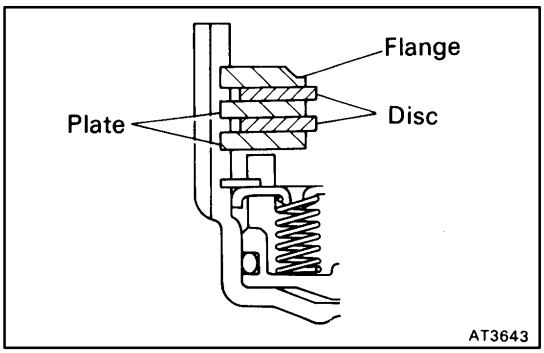

3. INSTALL PLATES, DISCS AND FLANGE

Install in order:
P=Plate D=Disc
P–D–P–D–Flange

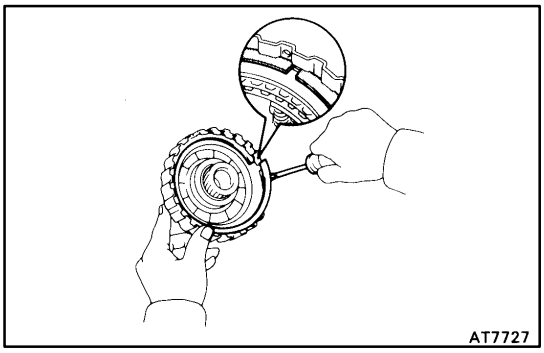

4. INSTALL SNAP RING

Be sure end gap of the snap ring is not aligned with the groove of the clutch drum.

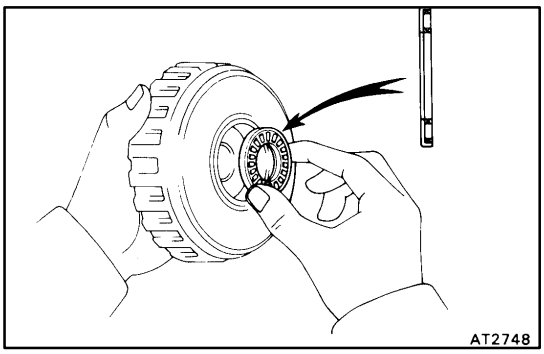

5. INSTALL BEARING AND RACE

(a) Coat the bearing with petroleum jelly and install it facing the race side downward to the clutch drum.
Bearing outer diameter: 46.3 mm (1.823 in.)
Bearing inner diameter: 26.2 mm (1.031 in.)

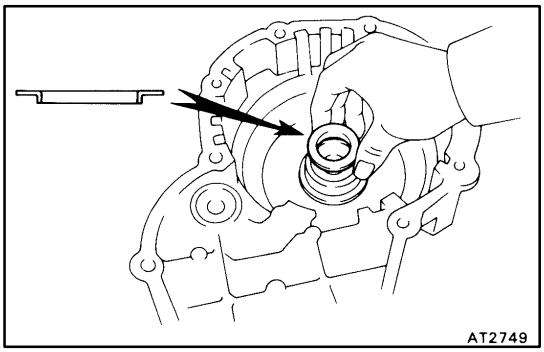

(b) Coat the race with petroleum jelly and install it to the case.
Race outer diameter: 43.0 mm (1.693 in.)
Race inner diameter: 24.5 mm (0.965 in.)

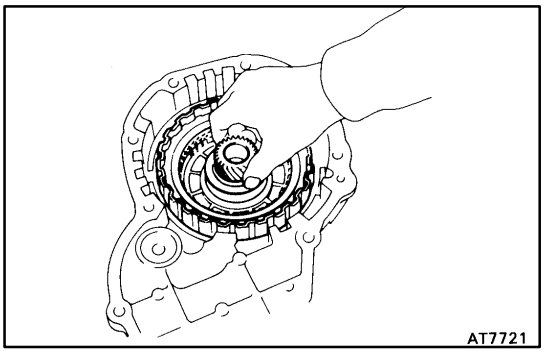

6. INSTALL DIRECT CLUTCH ON CASE

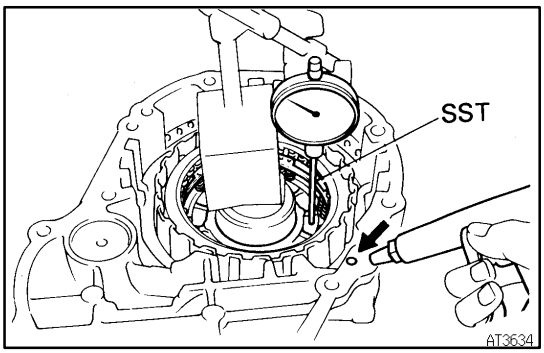

7. RECHECK PISTON STROKE OF DIRECT CLUTCH

Install a dial indicator and measuring terminal (SST) together, measure the piston stroke while applying and releasing compressed air (392–785 kPa, 4–8 kgf/cm^2, 57–114 psi).
Piston stroke:
1.75–2.49 mm (0.0689–0.0980 in.)
SST 09350–32014 (09351–32190)

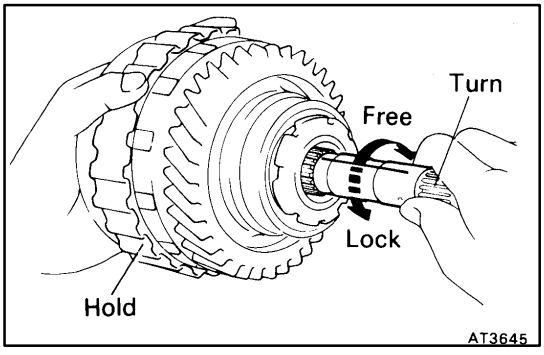

COUNTER DRIVE GEAR DISASSEMBLY

AX03Y–03

1. CHECK OPERATION OF ONE–WAY CLUTCH

(a) Install the O/D direct clutch into the one–way clutch.
(b) Hold the O/D direct clutch and turn the intermediate shaft. The shaft should turn freely clockwise and should lock counterclockwise.
(c) Remove the O/D direct clutch.

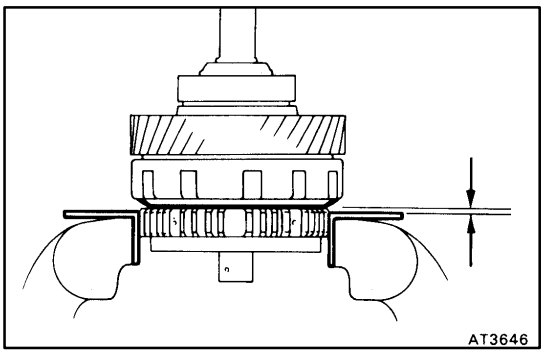

2. CHECK COUNTER DRIVE GEAR PRELOAD

(a) Hold the O/D planetary gear in a vise with soft jaws.
HINT: Do not let the counter drive gear touch the vise.

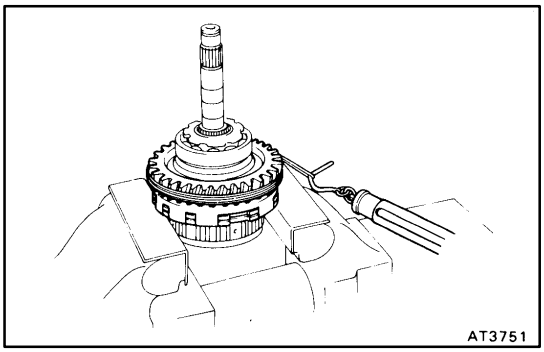

(b) Using a tension gauge, measure the preload.
Preload (at starting):
9.2–15.3 N (940–1,560 g, 2.1–3.4 lb)
HINT: Turn the counter drive gear right and left several times before measuring the preload.

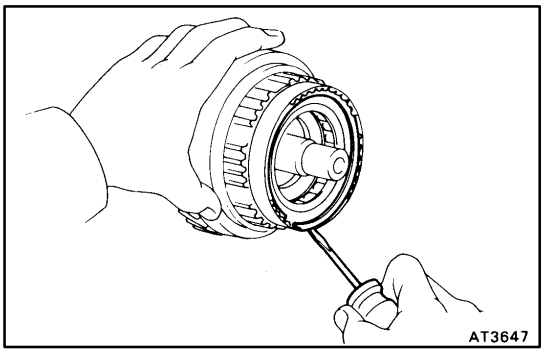

3. REMOVE O/D ONE–WAY CLUTCH AND OUTER RACE

(a) Remove the snap ring.

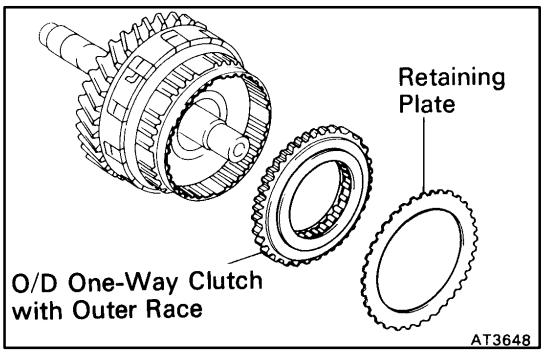

(b) Remove the retaining plate.
(c) Remove the O/D one–way clutch with outer race.

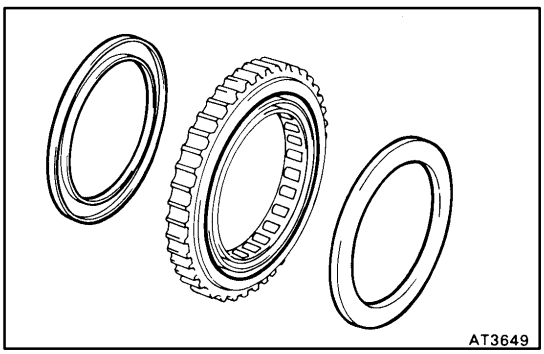

(d) Remove the 2 retainers from both sides of the O/D one–way clutch.

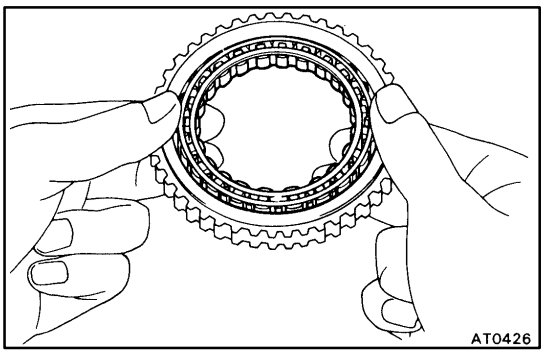

(e) Remove the O/D one–way clutch from the outer race.
HINT: Note the direction of the one–way clutch.

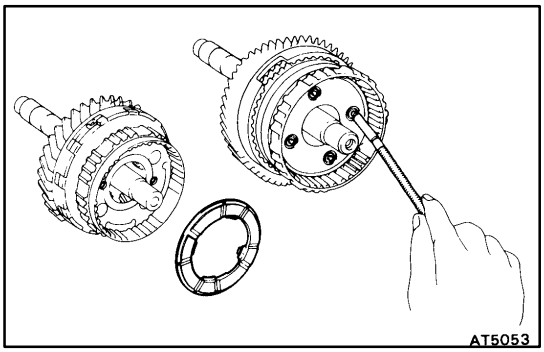

4. REMOVE NO.3 PLANETARY THRUST WASHER

5. REMOVE PLUGS FROM PLANETARY GEAR

Remove the 4 plugs with a magnetic finger.

NOTICE: Be careful not to lose them.

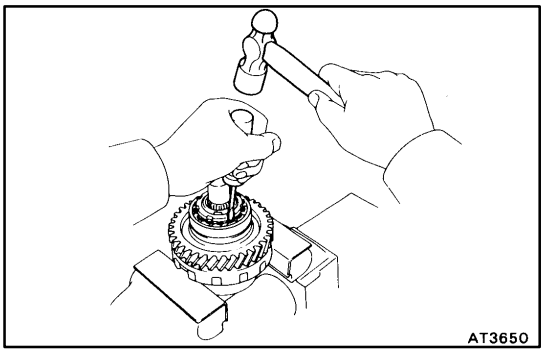

6. REMOVE ADJUSTING NUT AND LOCKING WASHER

(a) Pry off the locking washer.

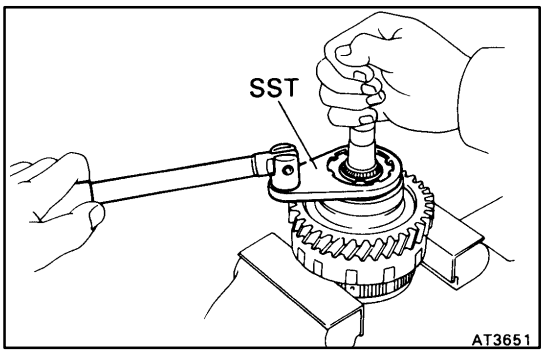

(b) Using SST, loosen the adjusting nut.
SST 09350–32014 (09351–32080)

(c) Remove the adjusting nut and locking washer.

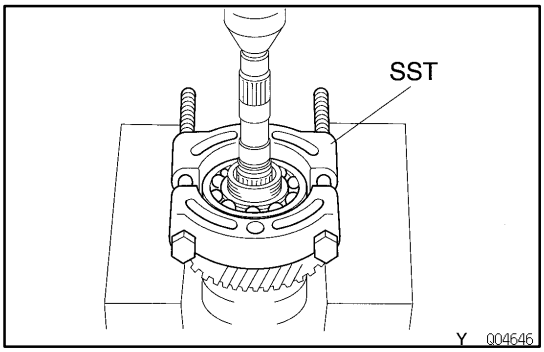

7. REMOVE INTERMEDIATE SHAFT BEARING

Using SST, press out the bearing from the shaft.
SST 09950–00020

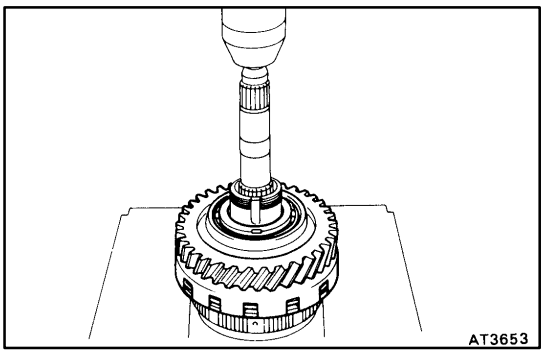

8. REMOVE COUNTER DRIVE GEAR AND FRONT BEARING

Press out the gear and bearing together.

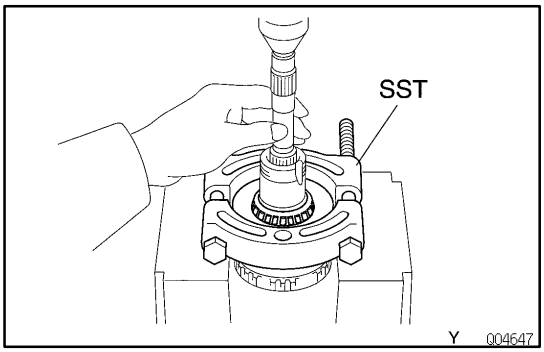

9. REMOVE REAR BEARING

(a) Using SST, press out the bearing.
SST 09950–00020

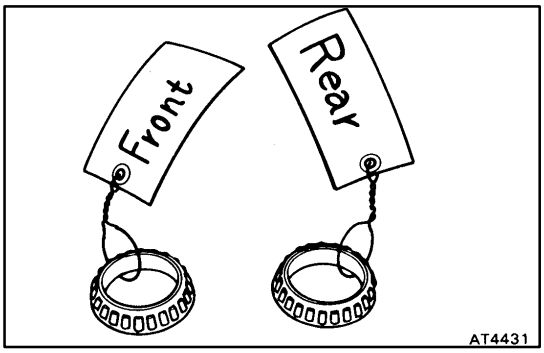

(b) Tag the bearings to show the location for reassembly.

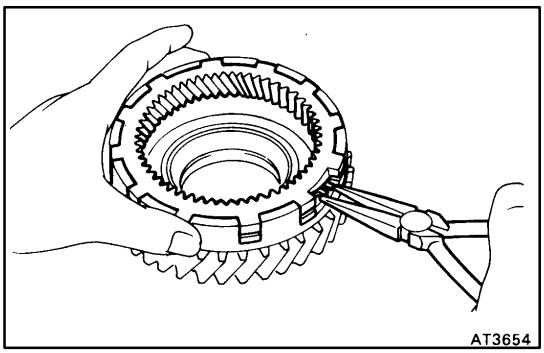

10. REMOVE O/D PLANETARY RING GEAR FROM COUNTER DRIVE GEAR

(a) While pulling up the ring gear, compress the snap ring with needle–nose pliers and remove it from the groove.
(b) Remove the ring gear from the counter drive gear.

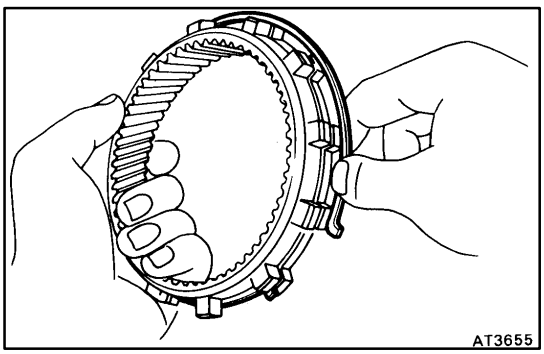

(c) Remove the snap ring from the ring gear.

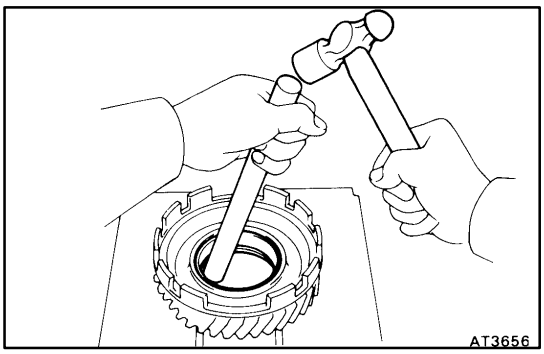

11. REMOVE OUTER RACES FROM COUNTER DRIVE GEAR

(a) Drive out the 2 races with a brass bar and hammer.

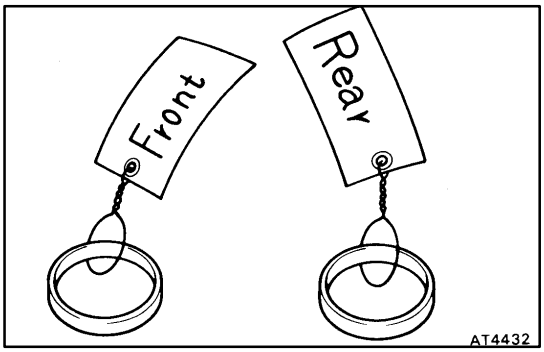

(b) Tag the races to show the location for reassembly.

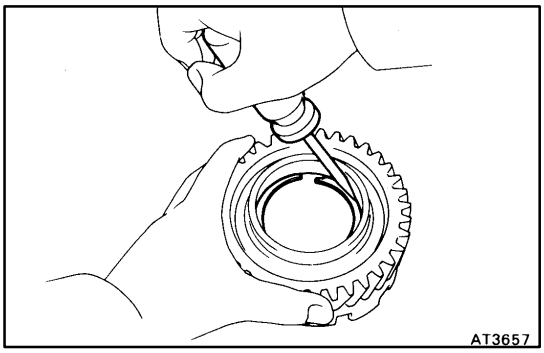

12. REMOVE SNAP RING FROM COUNTER DRIVE GEAR

Using a screwdriver, remove the snap ring.

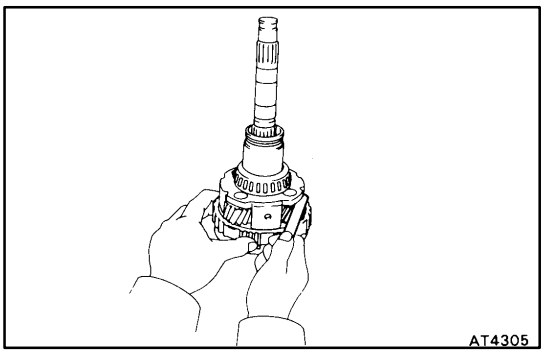

AX03Z–03

OVERDRIVE PLANETARY GEAR INSPECTION

MEASURE PLANETARY PINION GEAR THRUST CLEARANCE

Using a feeler gauge, measure the planetary pinion gear thrust clearance.

Standard clearance:

0.16–0.56 mm (0.0063–0.0220 in.)

Maximum clearance:

0.61 mm (0.0240 in.)

If the clearance is greater then the maximum, replace the planetary gear assembly.

AX040–03

COUNTER DRIVE GEAR ASSEMBLY

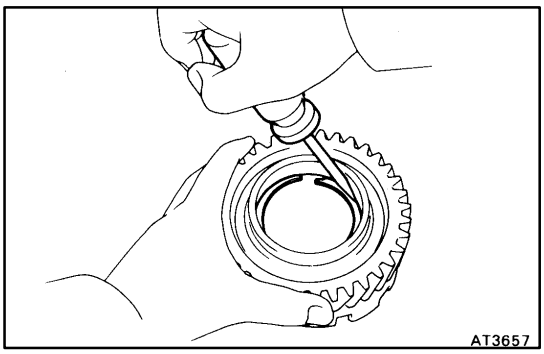

1. INSTALL SNAP RING INTO COUNTER GEAR

Install the snap ring with a screwdriver.

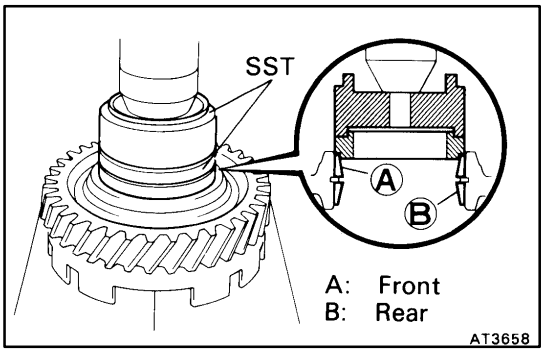

2. INSTALL OUTER RACES INTO COUNTER DRIVE GEAR

Using SST, press in the 2 outer races to both sides of the gear.

SST 09350–32014 (09351–32120, 09351–32150)

HINT: Press in the 2 outer races until they touch the snap ring. Tap the races in straight, so that they do not tilt.

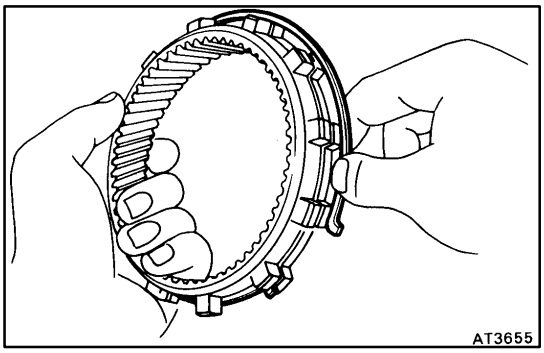

3. INSTALL OVERDRIVE PLANETARY RING GEAR INTO COUNTER DRIVE GEAR

(a) Install the snap ring to the ring gear.

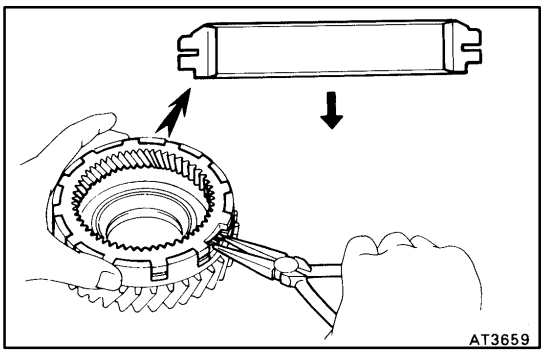

(b) While pushing down the ring gear, squeeze the snap ring end with needle–nose pliers, and install it into the groove.

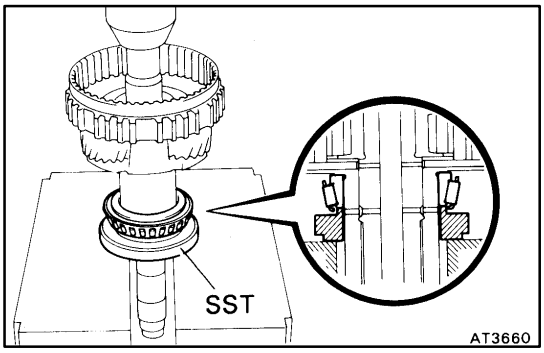

4. INSTALL REAR BEARING

Using SST, press in the bearing onto the shaft.

SST 09350–32014 (09351–32120)

HINT: Press in the bearing until the side surface of the inner race touches the planetary carrier.

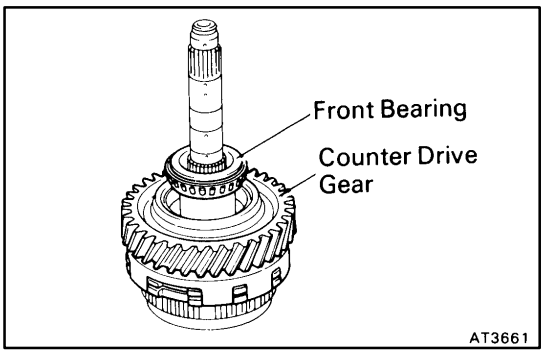

5. INSTALL COUNTER DRIVE GEAR AND FRONT BEARING

(a) Install the gear onto the shaft, and mesh the ring gear with the planetary pinions.

(b) Place the front bearing on to the shaft.

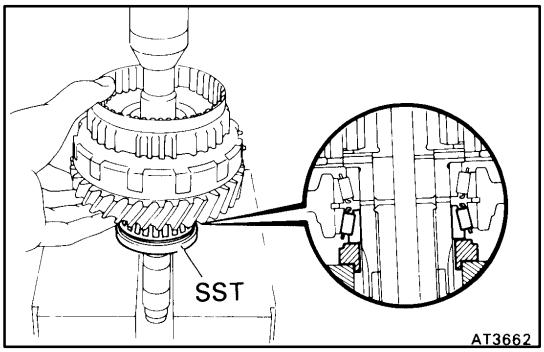

(c) Using SST, press in the bearing until there is slight play between the bearings.
SST 09350–32014 (09351–32120)
HINT: Hold the ring gear to prevent it from falling.

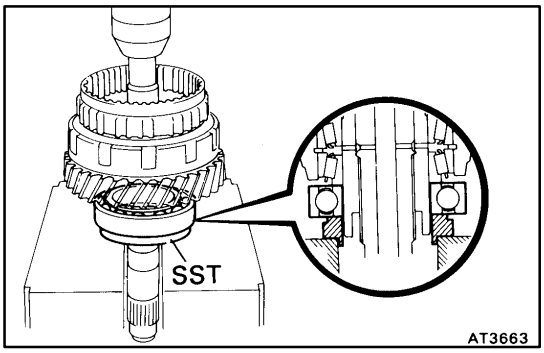

6. INSTALL INTERMEDIATE SHAFT BEARING

Using SST, press in the bearing until it slightly touches the front bearing of the counter drive gear.
SST 09350–32014 (09351–32120)
HINT: The counter drive gear can be turned lightly.

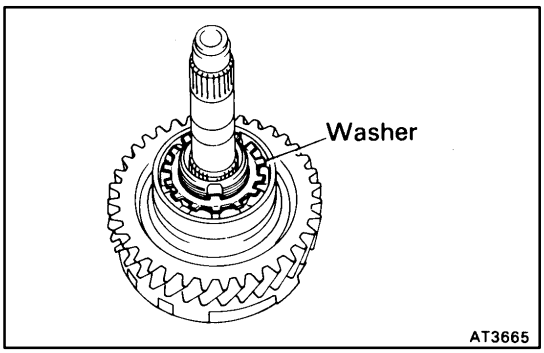

7. PLACE NEW LOCKING WASHER

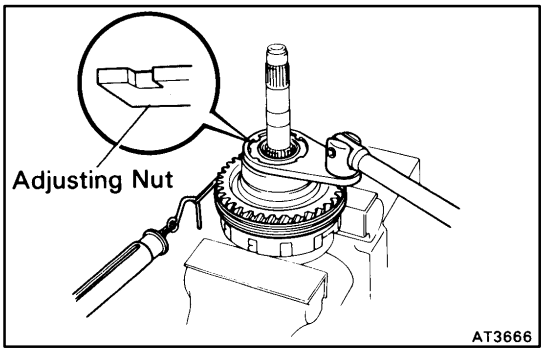

8. INSTALL ADJUSTING NUT AND ADJUST PRELOAD OF COUNTER DRIVE GEAR

(a) Hold the overdrive planetary gear in a vise with soft jaws.

(b) Using SST, tighten the adjusting nut until the following gear starting load is reached on the tension gauge.
SST 09350–32014 (09351–32080)
Preload (at starting):
9.2–15.3 N (940–1,560 g, 2.1–3.4 lb)

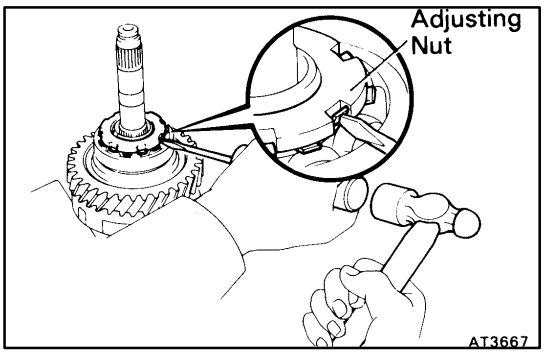

HINT: Turn the counter drive gear right and left several times before measuring the preload.

(c) Lock the adjusting nut with one locking washer tab. Bend the locking washer tab until it is flat with the adjusting nut groove.

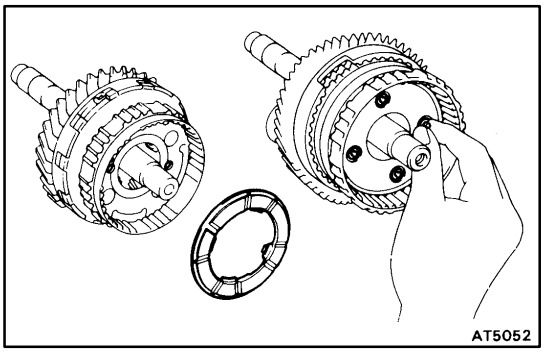

9. INSTALL NO.3 OVERDRIVE PLANETARY THRUST WASHER

10. INSTALL PINION SHAFT PLUGS

Install the 4 plugs into the pinion shaft.

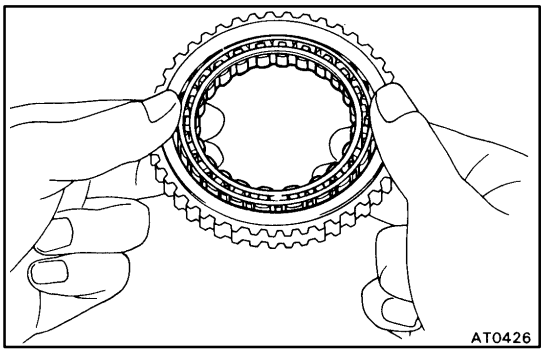

11. INSTALL OVERDRIVE ONE–WAY CLUTCH AND RETAINING PLATE

(a) Install the one–way clutch into the outer race.

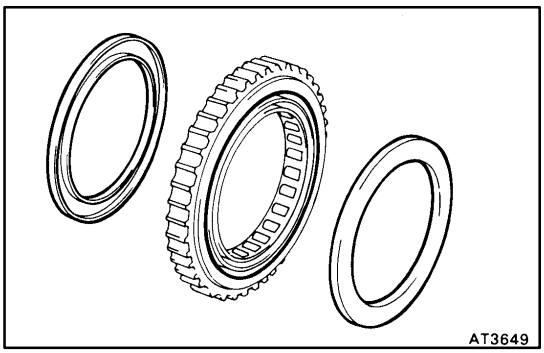

(b) Install the 2 retainers on both sides of the one–way clutch.

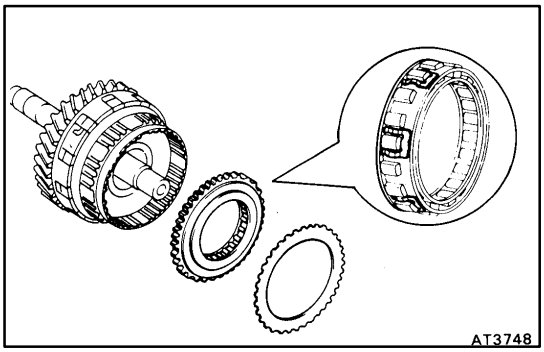

(c) Install the one–way clutch into the overdrive planetary gear.

HINT: Be sure that the one–way clutch is installed in the correct direction.

(d) Install the retaining plate.

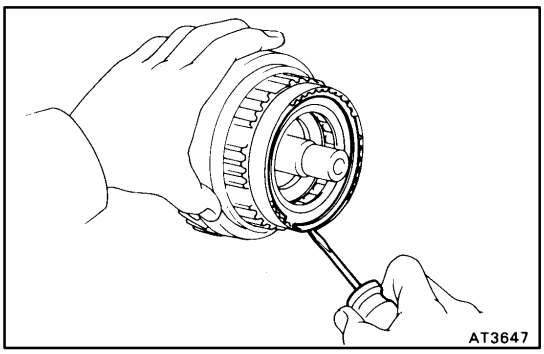

(e) Install the snap ring.

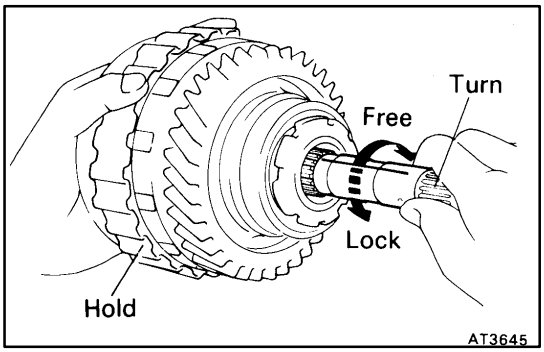

12. CHECK OPERATION OF O/D ONE–WAY CLUTCH

(a) Install the overdrive direct clutch into the one–way clutch.
(b) Hold the overdrive direct clutch and turn the intermediate shaft. The shaft should turn freely clockwise and should lock counterclockwise.
(c) Remove the overdrive direct clutch.

AX041–02

OVERDRIVE CASE DISASSEMBLY

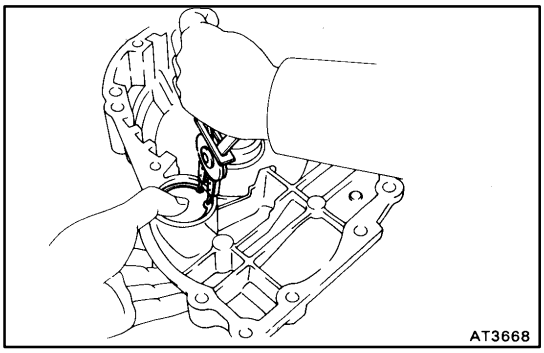

1. REMOVE C_0 ACCUMULATOR PISTON FROM OVERDRIVE CASE

(a) Using snap ring pliers, remove the snap ring.

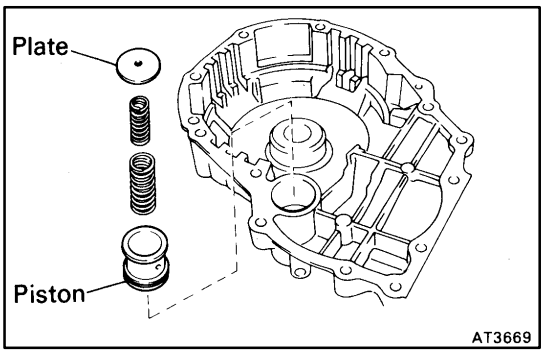

(b) Remove the retaining plate and 2 springs.
(c) Remove the accumulator piston.

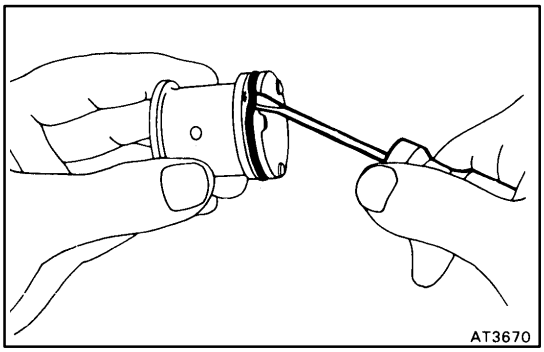

(d) Remove the O–ring from the piston.

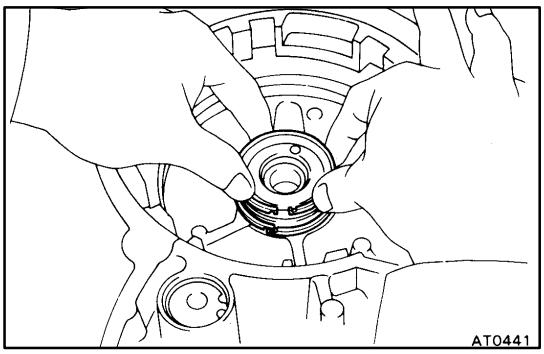

2. REMOVE OIL SEAL RINGS

AX042–02

OVERDRIVE CASE ASSEMBLY

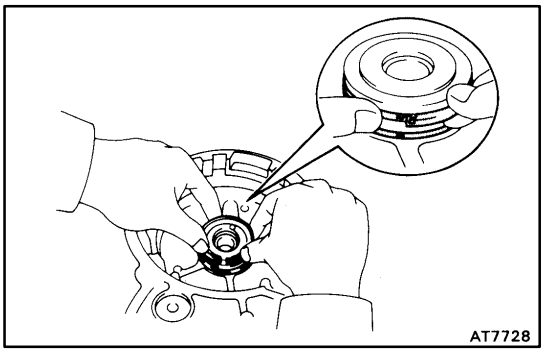

1. INSTALL OIL SEAL RINGS ON OVERDRIVE CASE

Install the 2 oil seal rings to the overdrive case groove, then snug them down by squeezing their ends together.
HINT: After installing the oil seal rings, check that they move smoothly.

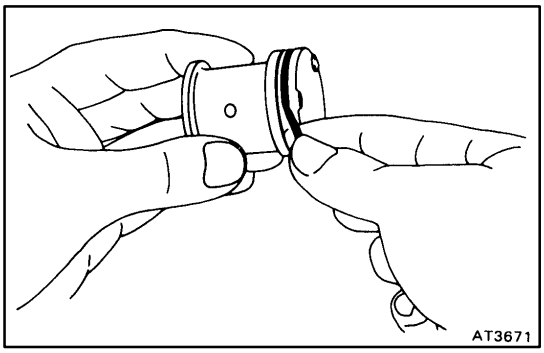

2. INSTALL C0 ACCUMULATOR PISTON TO OVERDRIVE CASE

(a) Install a new O–ring to the accumulator piston.
(b) Coat the O–ring with ATF.

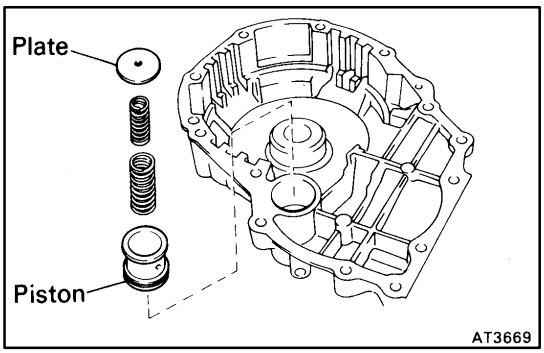

(c) Install the accumulator piston, 2 springs and retaining plate.

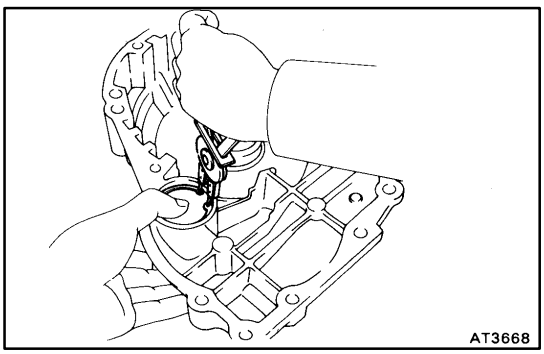

(d) Using snap ring pliers, install the snap ring.

AX043–05

OVERDRIVE BRAKE ASSEMBLY

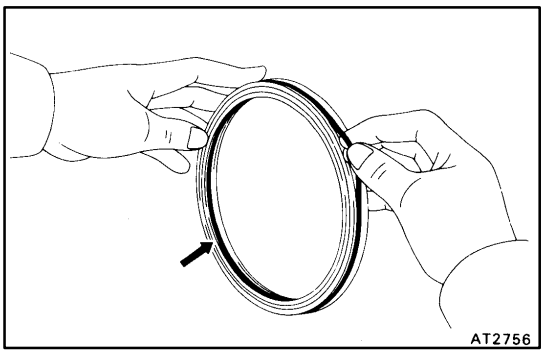

1. INSTALL PISTON INTO DRUM

(a) Install new O–rings to the piston.
Coat the new O–rings with ATF.

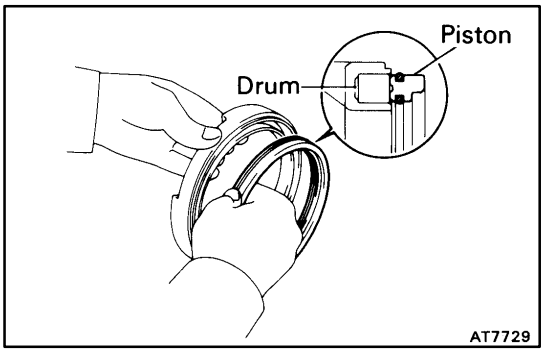

(b) Press the piston into the drum, being careful not to damage the O–rings.

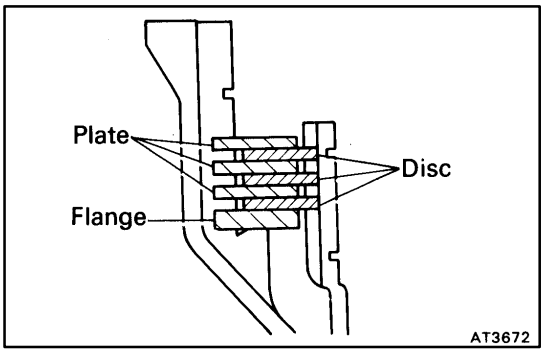

2. INSTALL FLANGE, DISCS AND PLATES

Install the flange, discs and plates.
Install in order:
P=Plate D=Disc
Flange–D–P–D–P–D–P

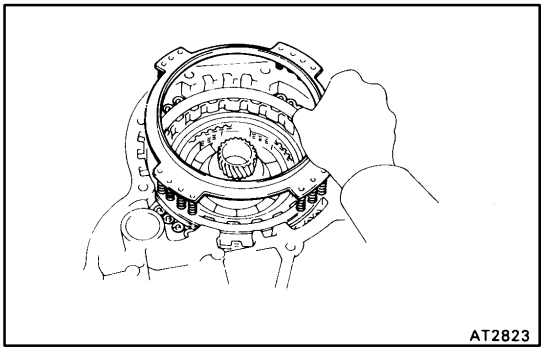

3. POSITION PISTON RETURN SPRING

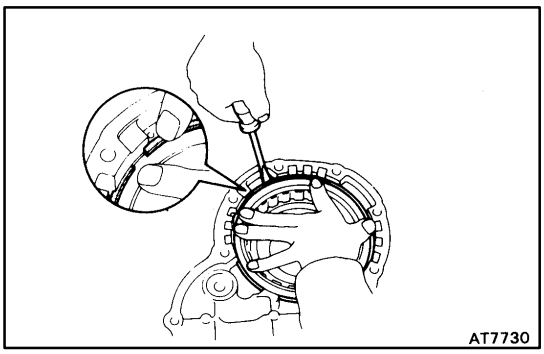

4. INSTALL SNAP RING INTO CASE

Be sure the end gap of the snap ring is not aligned with one of cutouts.

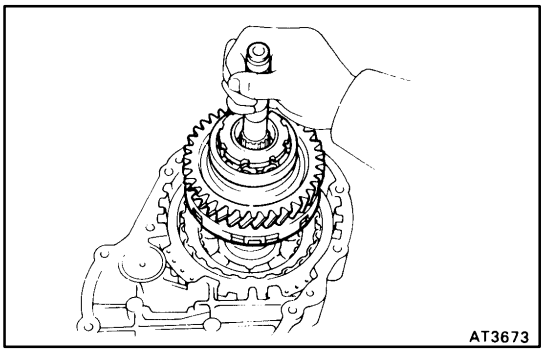

5. INSTALL OVERDRIVE PLANETARY GEAR ONTO OVERDRIVE DIRECT CLUTCH

While turning the overdrive planetary gear clockwise, install it onto the overdrive direct clutch.

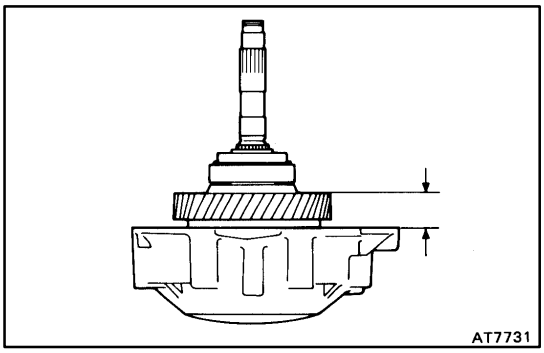

HINT: If the overdrive planetary gear is properly installed onto the direct clutch, the counter drive gear height from the overdrive case will be about 24 mm (0.94 in.).

VALVE BODY
COMPONENTS

AX044–02

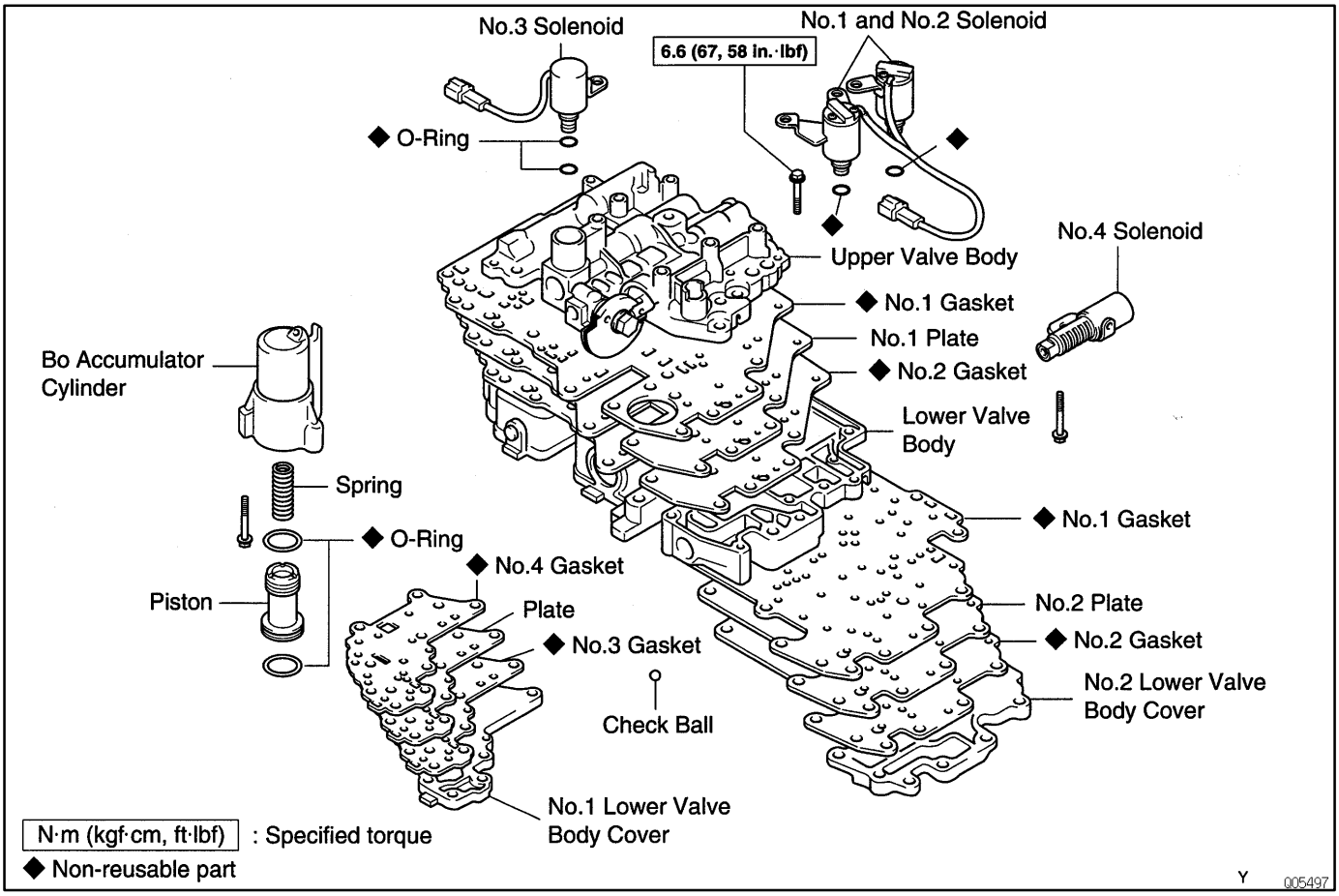

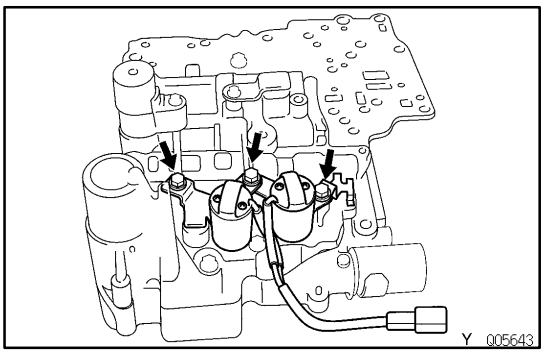

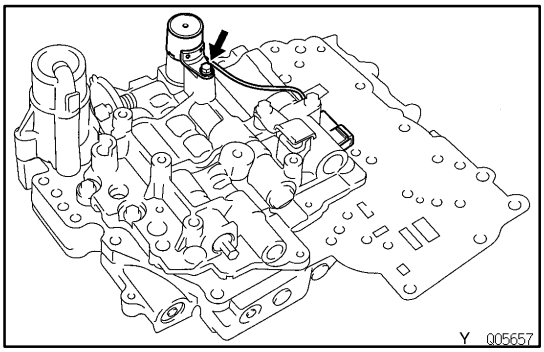

AX0TW–01

VALVE BODY DISASSEMBLY

NOTICE: When disassembling the valve body, be careful not to damage or deform the plate which overhangs the valve body.

1. REMOVE SOLENOIDS

(a) Remove No.1 and No.2 solenoids with the retainer.
NOTICE: When removing the solenoid, do not use a screwdriver, etc. to pry up the solenoid.

(b) Remove the O–ring from each solenoid.

(c) Remove the No.3 solenoid.

(d) Remove the O–ring from the solenoid.

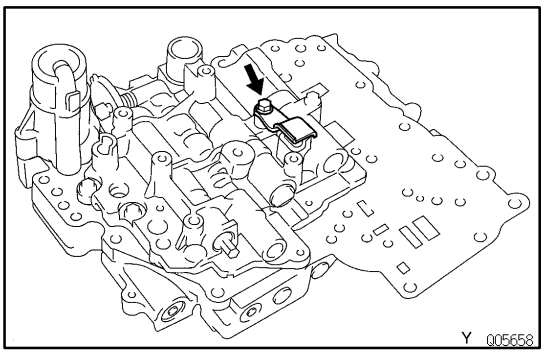

2. REMOVE LOCK PLATE

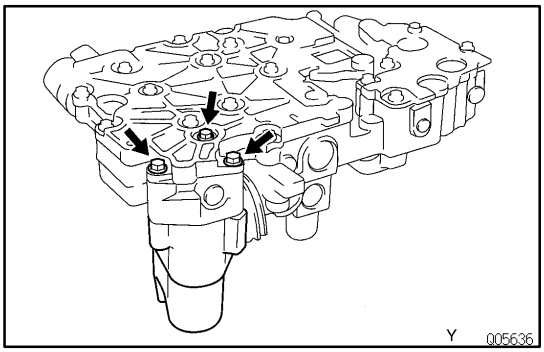

3. REMOVE B_0 ACCUMULATOR ASSEMBLY

(a) Remove the 3 bolts.
(b) Remove the B_0 accumulator assembly.

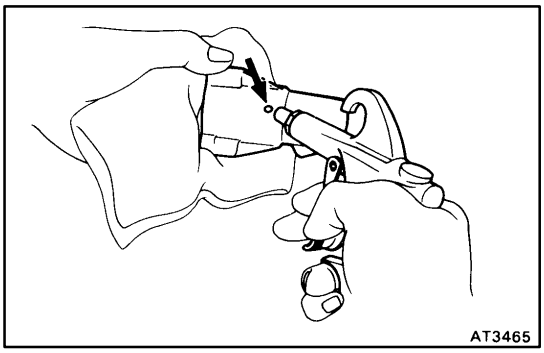

4. DISASSEMBLE B_0 ACCUMULATOR ASSEMBLY

(a) Applying compressed air to the cylinder hole, remove the piston and spring.
(b) Remove the 2 O–rings from the piston.

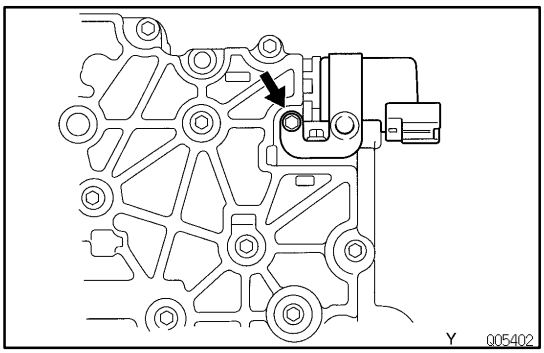

5. REMOVE NO.4 SOLENOID

(a) Remove the No.4 solenoid.
(b) Remove the O–ring from the solenoid.

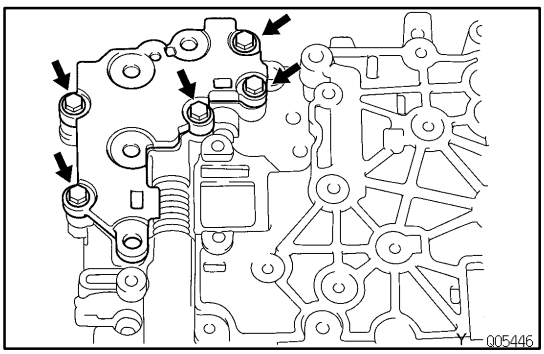

6. REMOVE NO.1 LOWER VALVE BODY COVER

Remove the 5 bolts and No.1 lower valve body cover.

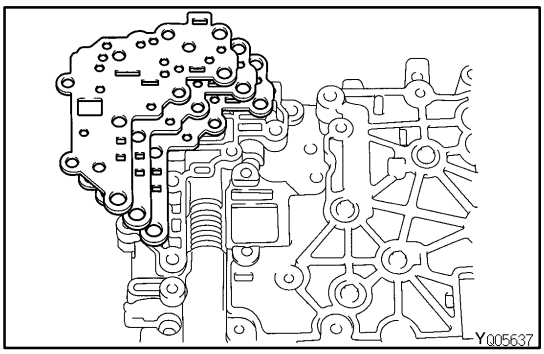

7. REMOVE OIL STRAINER, NO.1 LOWER VALVE BODY COVER GASKETS AND CHECK VALVE

(a) Remove the 2 gaskets and plate from the lower valve body.

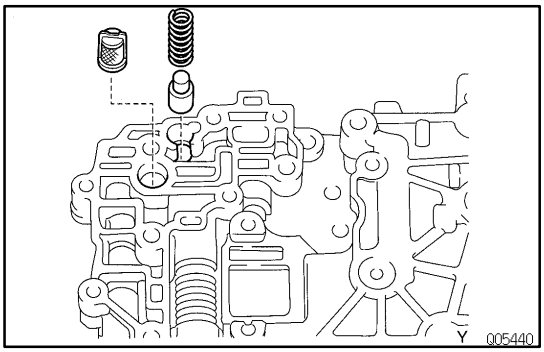

(b) Remove the oil strainer, check valve and spring.

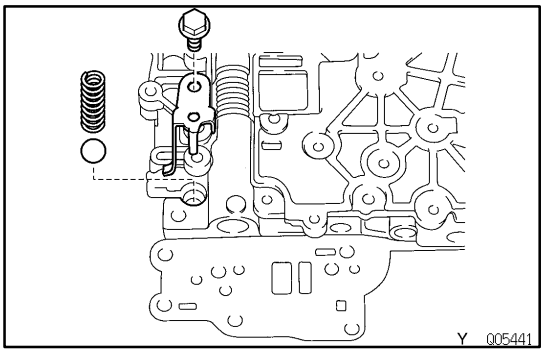

8. REMOVE PRESSURE RELIEF VALVE

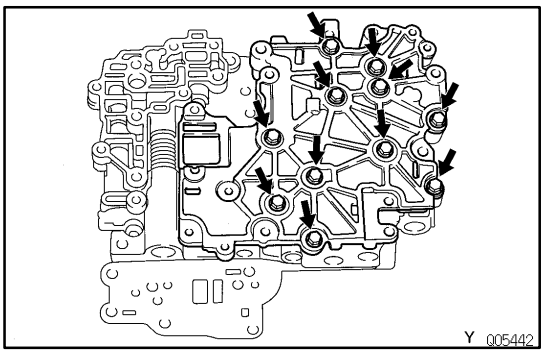

9. REMOVE NO.2 LOWER VALVE BODY COVER, OIL STRAINER, CHECK BALLS AND VIBRATING STOPPER

Remove the 11 bolts and lower valve body cover.

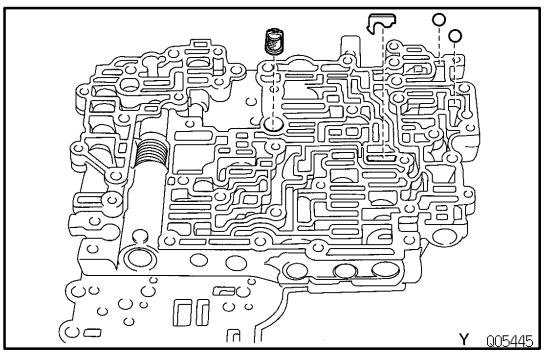

(b) Remove the 2 check balls, oil strainer and vibrating stopper.

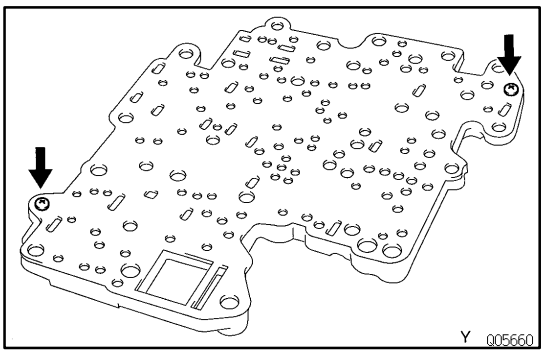

10. REMOVE NO.2 LOWER VALVE BODY COVER GASKETS AND CHECK BALLS

(a) Remove the 2 screws from the lower valve body cover.

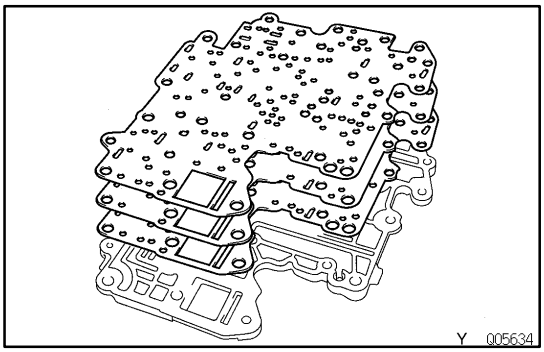

(b) Remove the 2 gaskets and plate.

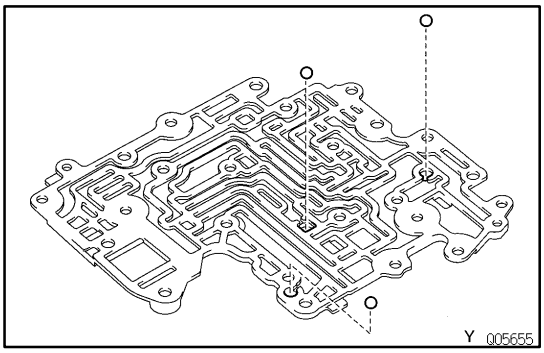

(c) Remove the 3 check balls from the cover.

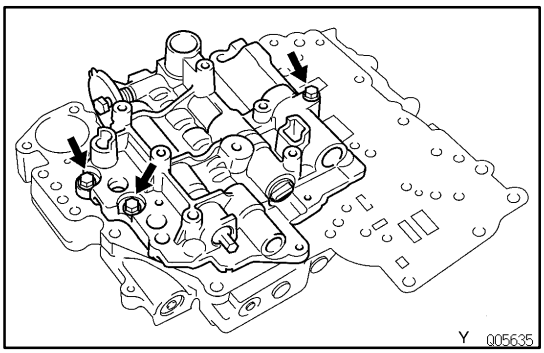

11. REMOVE BOLTS FROM UPPER VALVE BODY

Remove the 3 bolts.

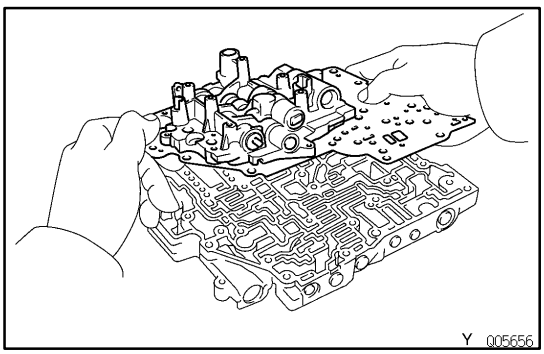

12. LIFT OFF UPPER VALVE BODY AND NO.1 PLATE AS A SINGLE UNIT

Hold No.1 plate to the upper valve body and lift off the upper valve body.

HINT: Be careful that the check balls and oil strainer do not fall out.

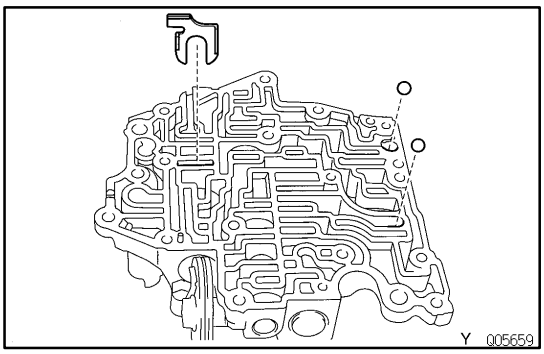

13. REMOVE 2 CHECK BALLS AND VIBRATING STOPPER FROM UPPER VALVE BODY

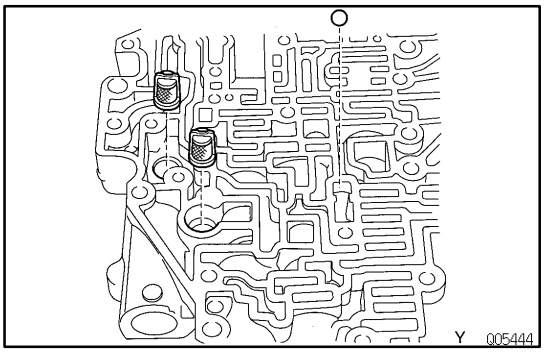

14. REMOVE 2 OIL STRAINERS AND CHECK BALL FROM LOWER VALVE BODY

AX0TX–01

VALVE BODY ASSEMBLY

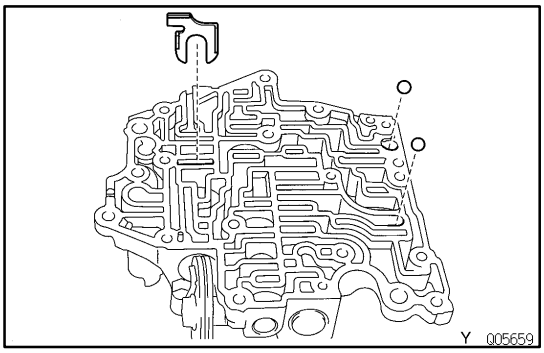

1. INSTALL 2 CHECK BALLS AND VIBRATING STOPPER TO UPPER VALVE BODY

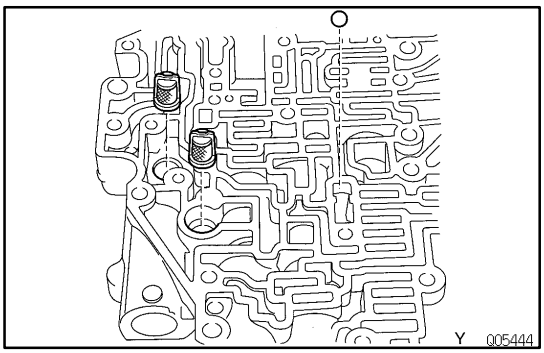

2. INSTALL 2 OIL STRAINERS AND CHECK BALL TO LOWER VALVE BODY

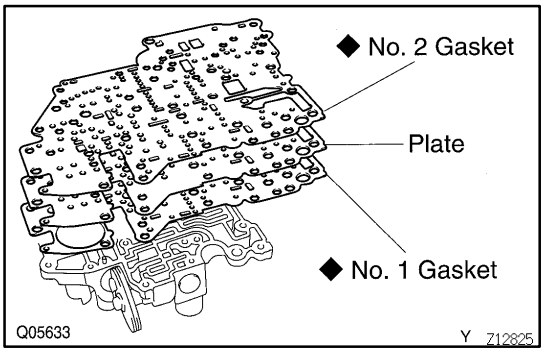

3. POSITION PLATE AND NEW GASKETS ON UPPER VALVE BODY

Position new No.1 gasket, plate and the new No.2 gasket on the upper valve body.

HINT: Since No.1 gasket and No.2 gasket are similar, use the illustration below to discriminate between them.

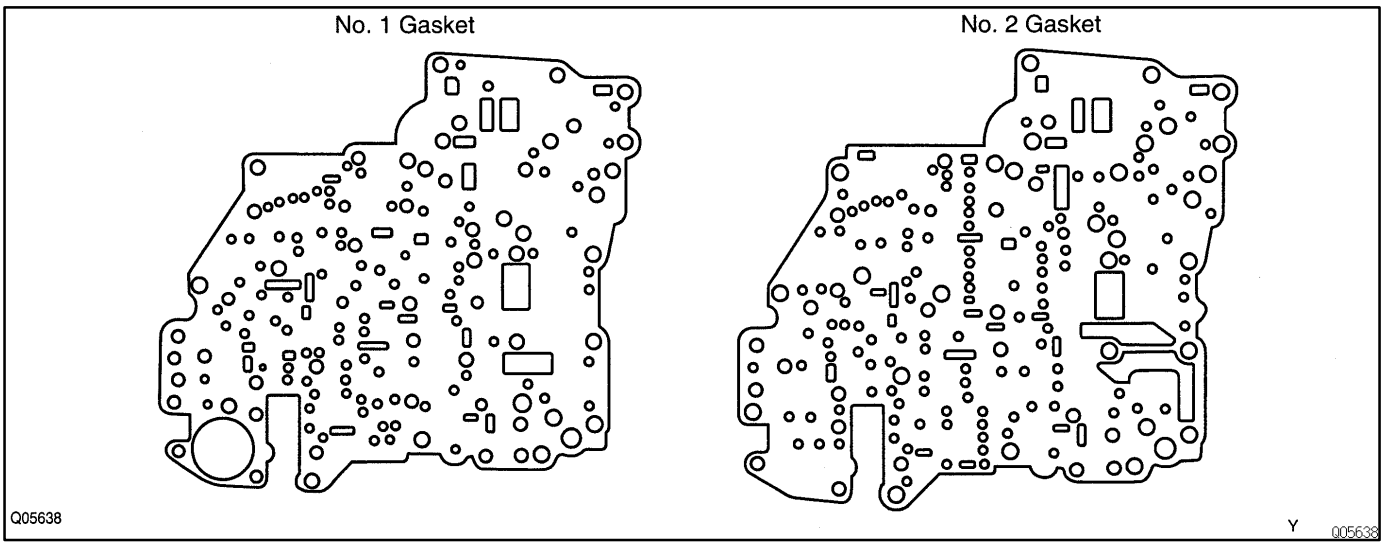

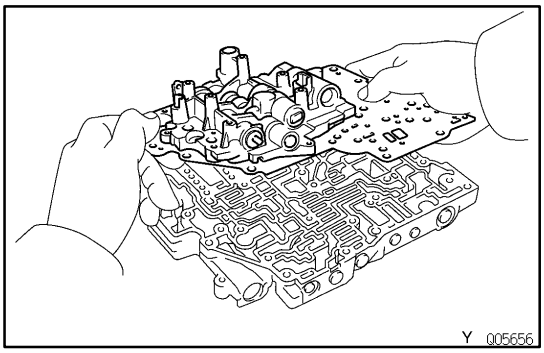

4. PLACE UPPER VALVE BODY WITH PLATE AND GASKETS ON LOWER VALVE BODY

Hold the upper valve body, plate and gaskets securely so they do not separate.

Align each bolt hole in the valve bodies with the gaskets and plate.

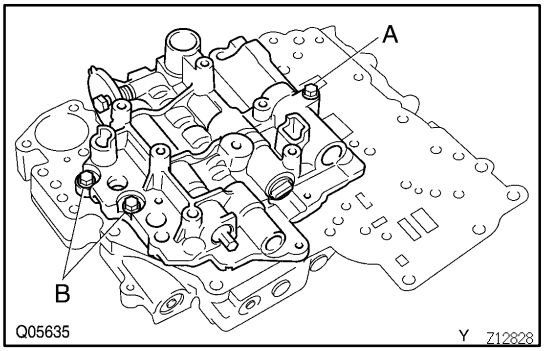

5. INSTALL AND FINGER TIGHTEN BOLTS IN UPPER VALVE BODY TO SECURE LOWER VALVE BODY

Install and finger tighten the 3 bolts.

HINT: Each bolt length is indicated below.

Bolt length:

Bolt A: 44 mm (1.732 in.)

Bolt B: 16 mm (0.630 in.)

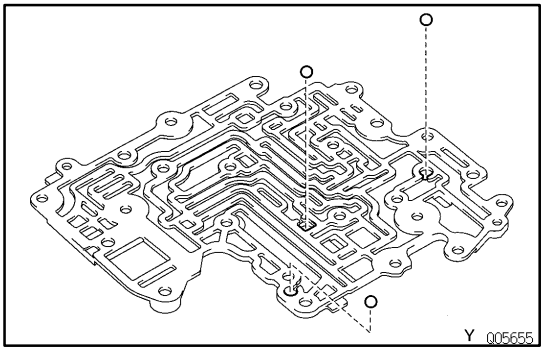

6. INSTALL NO.2 LOWER VALVE BODY COVER GASKETS, PLATE AND 3 CHECK BALLS

(a) Install the 3 check balls into the No.2 lower valve body cover.

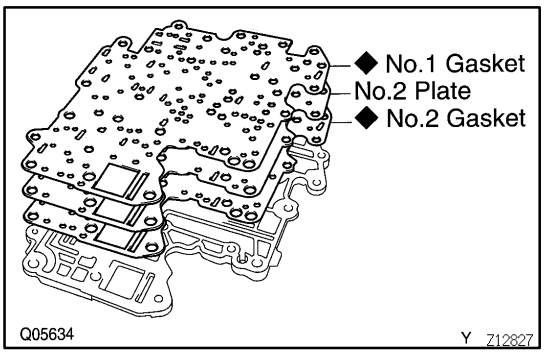

(b) Position a new gasket and plate and then another new gasket.
HINT: Both gaskets are identical.

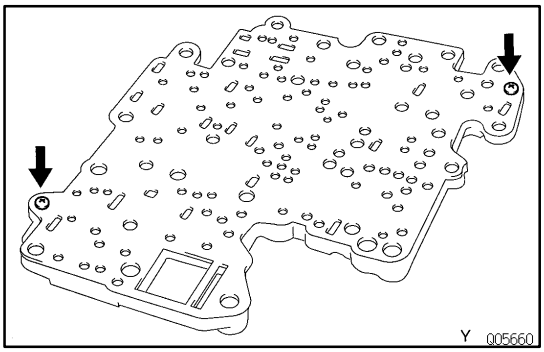

(c) Install the 2 screws.

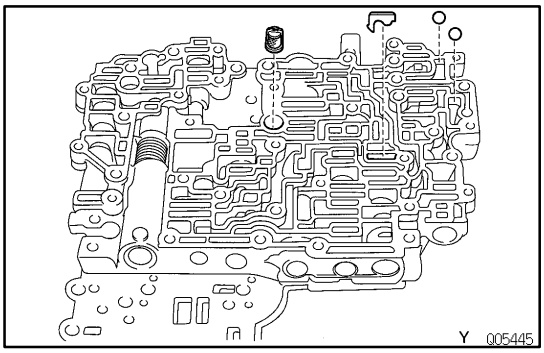

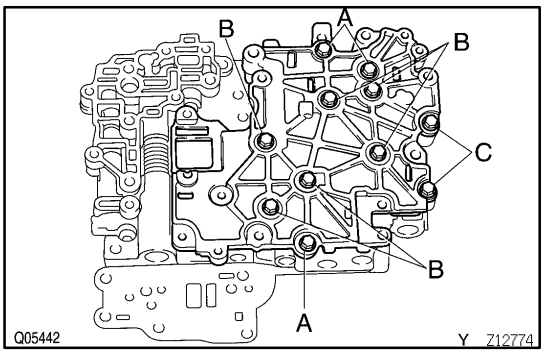

8. INSTALL NO.2 LOWER VALVE BODY COVER

(a) Position the No.2 lower valve body cover.

(b) Install and finger tighten the 11 bolts.
HINT: Each bolt length is indicated below.
Bolt length:
Bolt A: 40 mm (1.575 in.)
Bolt B: 44 mm (1.732 in.)
Bolt C: 14 mm (0.551in.)

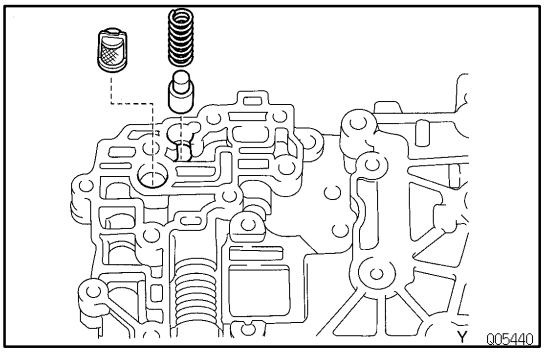

9. INSTALL OIL STRAINER AND CHECK VALVE

Install the oil strainer and check valve into the lower valve body.

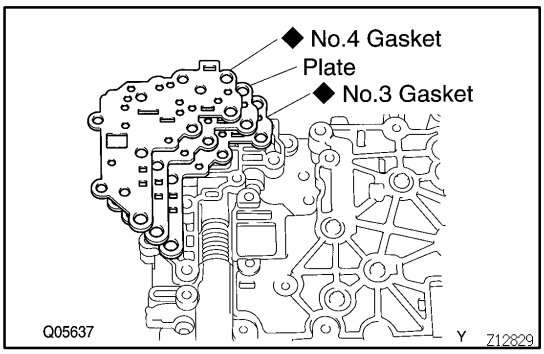

10. INSTALL LOWER VALVE BODY COVER GASKETS AND NO.2 PLATE

Position a new gasket and plate and then another new gasket.

HINT: Both gaskets are identical.

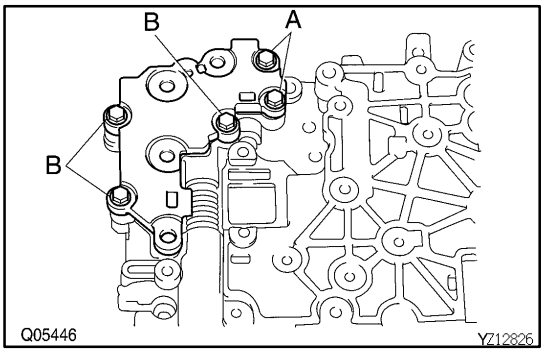

11. INSTALL LOWER VALVE BODY COVER

(a) Position the lower valve body cover.

(b) Install and finger tighten the 5 bolts.

HINT: Each bolt length is indicated below.

Bolt length

Bolt A: 47 mm (1.850 in.)

Bolt B: 14 mm (0.551 in.)

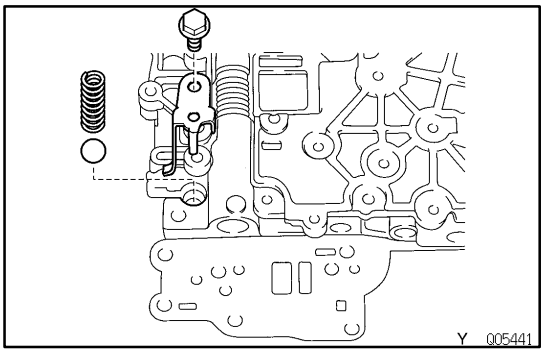

12. INSTALL PRESSURE RELIEF VALVE

13. TIGHTEN BOLTS OF UPPER AND LOWER VALVE BODIES

(a) Tighten the 16 bolts in the lower valve body.

Torque: 6.6 N·m (67 kgf·cm, 58 in.·lbf)

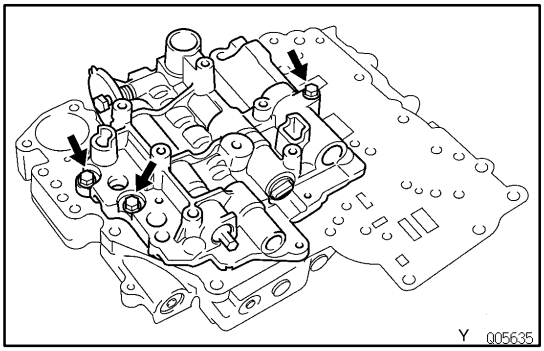

(b) Tighten the 3 bolts in the upper valve body.

Torque: 6.6 N·m (67 kgf·cm, 58 in.·lbf)

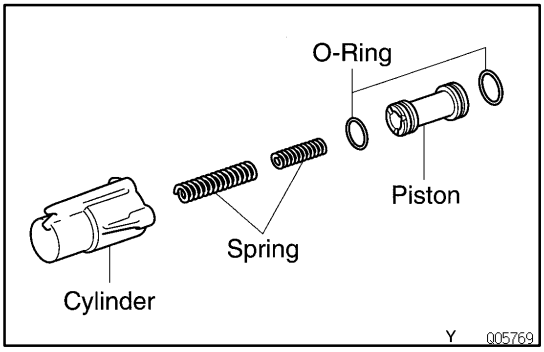

14. INSTALL B_0 ACCUMULATOR ASSEMBLY

(a) Coat new O–rings with ATF and install them to the piston.

(b) Install the spring and piston into the cylinder.

Spring dimensions

mm (in.)

	Color	Free length	Coil outer diameter
Inner	White	47.5 (1.870)	18.9 (0.744)
Outer	None	16.3 (0.642)	20.7 (0.815)

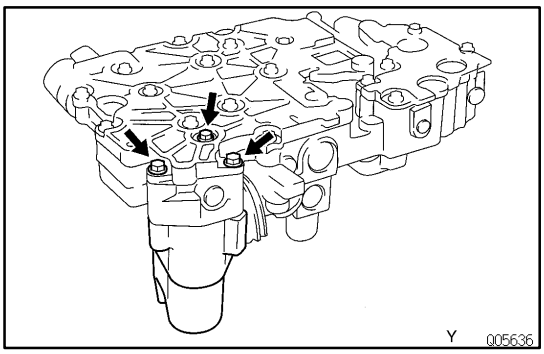

(d) Install the B_0 accumulator assembly.
(e) Install the torque the 3 bolts.
Torque: 6.6 N·m (67 kgf·cm, 58 in.·lbf)

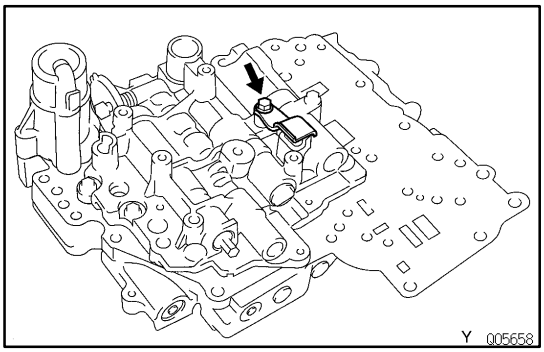

15. INSTALL LOCK PLATE

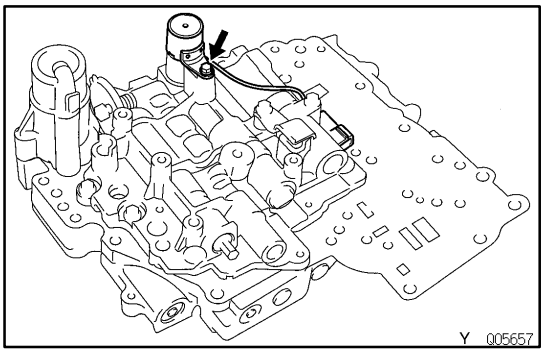

16. INSTALL SOLENOIDS
(a) Coat new O–rings with ATF and install them to the solenoids.
(b) Install the lock–up solenoid.
(c) Install and torque the bolt.
Torque: 6.6 N·m (67 kgf·cm, 58 in.·lbf)

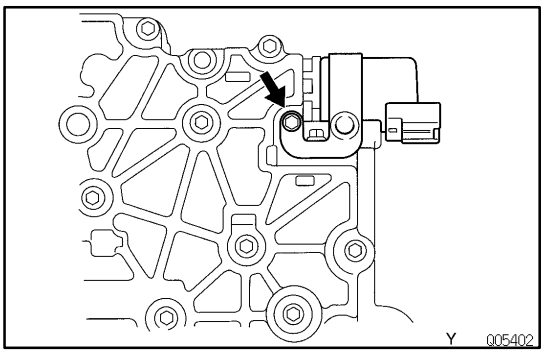

(d) Install the No.4 solenoid.
(e) Install and torque the bolt.
Torque: 6.6 N·m (67 kgf·cm, 58 in.·lbf)

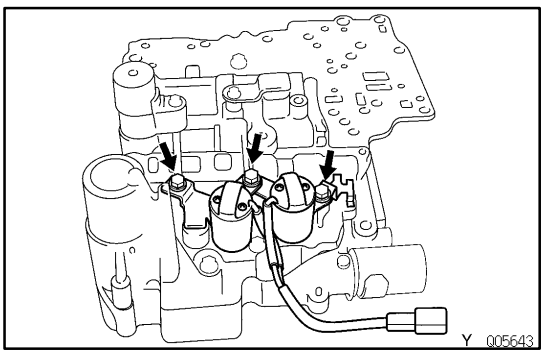

(d) Install No.1 and No.2 solenoids.
(e) Install and torque the 3 bolts.
Torque: 6.6 N·m (67 kgf·cm, 58 in.·lbf)

UPPER VALVE BODY

AX047–03

COMPONENTS

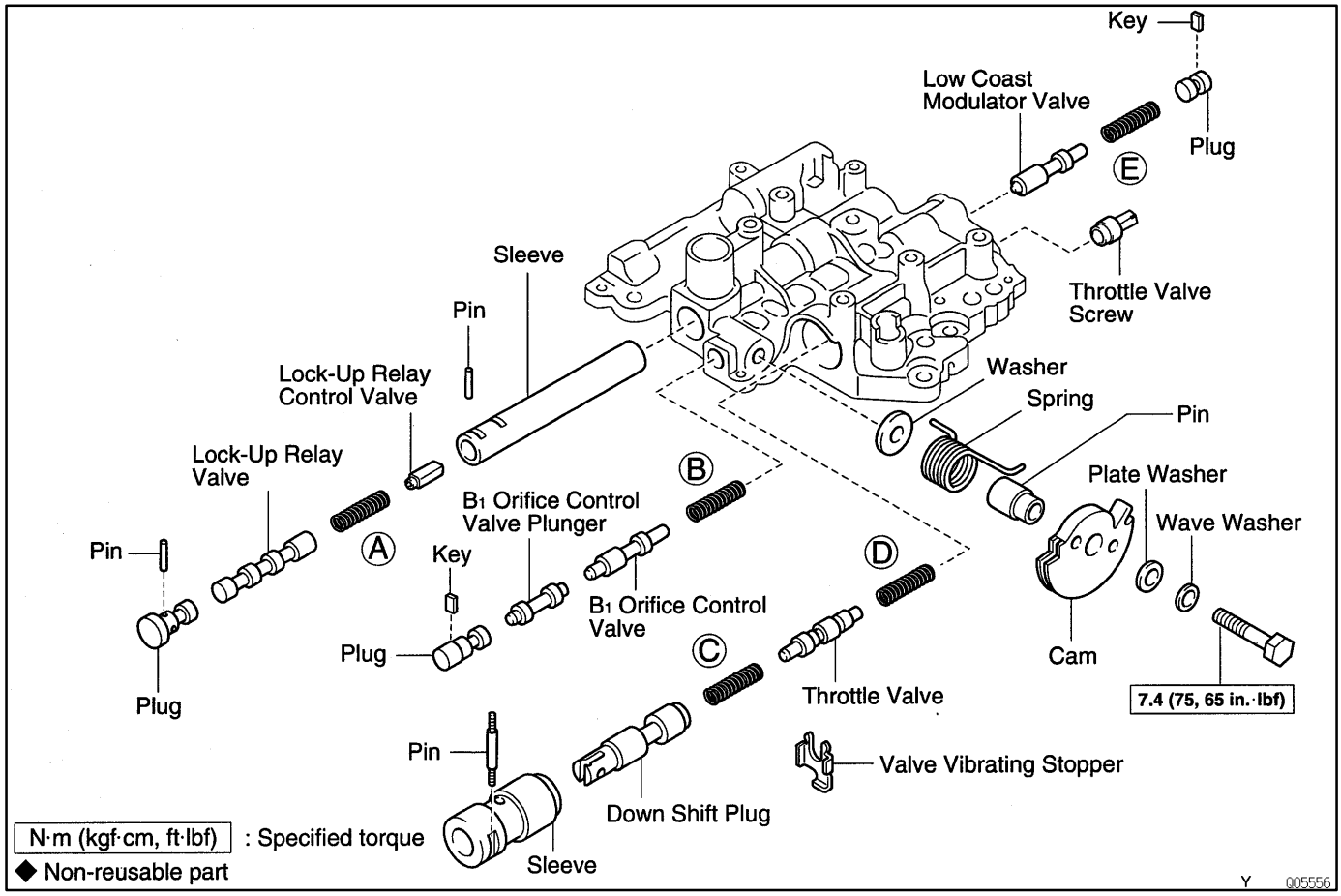

AX048–03

VALVE BODY SPRINGS SPECIFICATIONS

HINT: During reassembly please refer to the spring specifications above to help discriminate between the different springs.

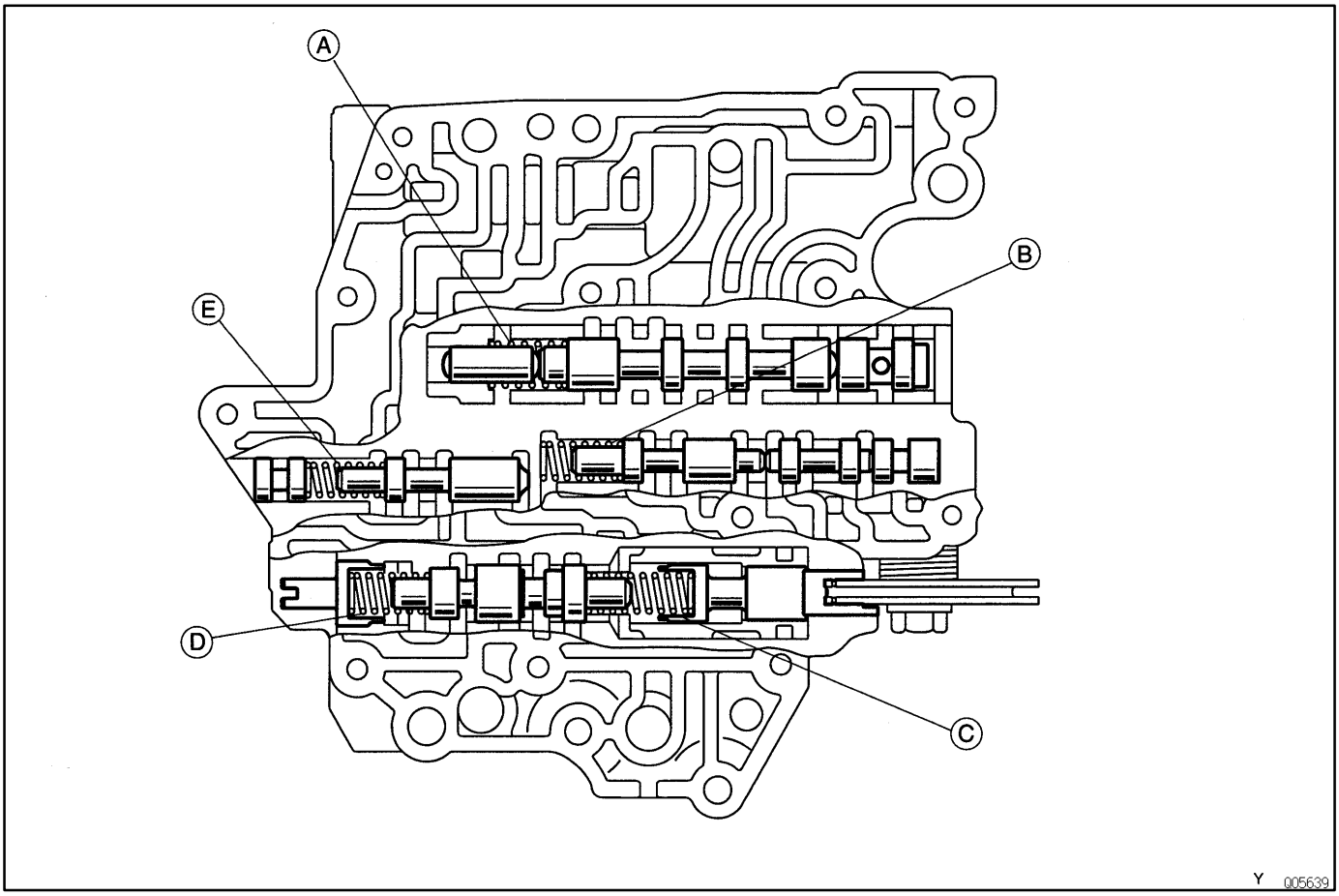

Mark	Name (Color)	Free Length / Outer Diameter mm (in.)	Total No. of Coils
@@@@@: [c A]	Lock–Up Relay Valve (Yellow)	26.8 (1.055) / 10.2 (0.402)	10.8
@@@@@: [c B]	B_1 Orifice Control Valve (White)	24.8 (0.976) / 6.4 (0.252)	12.0
@@@@@: [c C]	Throttle Valve (Green)	31.5 (1.240) / 7.0 (0.276)	11.4
@@@@@: [c D]	Down–Shift Plug (None)	15.0 (0.591) / 11.0 (0.433)	7.0

@@ @@ @: [c E]	Low Coast Modulator Valve (Purple)	20.2 (0.795) / 7.9 (0.311)	11.9

AX0GZ–02

RETAINERS, PIN, AND CHECK BALLS LOCATION

1. PIN, RETAINERS

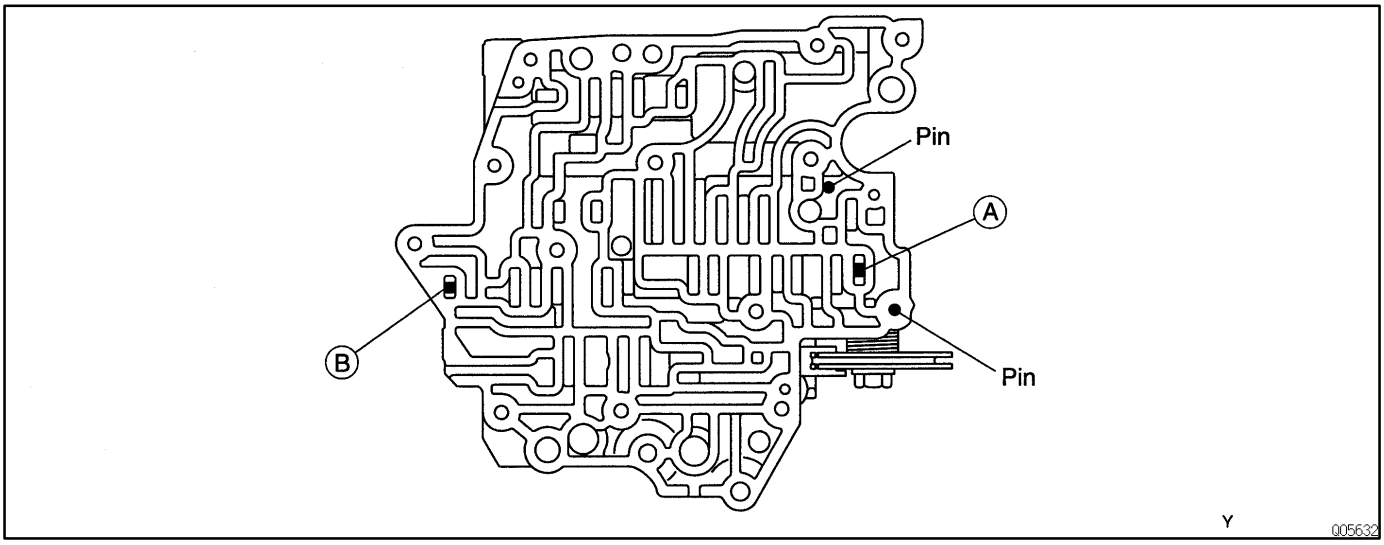

Mark	Name	Height / Width / Thickness mm (in.)
@@@@@: [c A]	B_1 Orifice Control Valve	8.9 (0.350) / 5.0 (0.197) / 3.2 (0.126)
@@@@@: [c B]	Low Coast Modulator Valve	8.5 (0.335) / 5.0 (0.197) / 3.2 (0.126)

2. CHECK BALLS

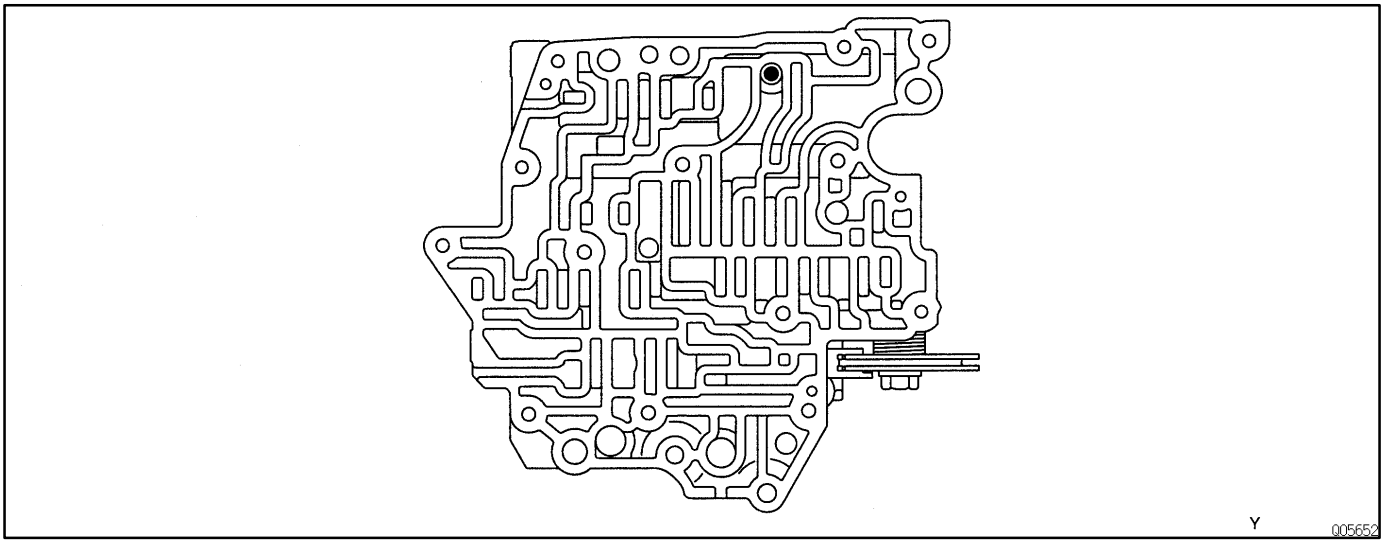

LOWER VALVE BODY

COMPONENTS

AX04A–03

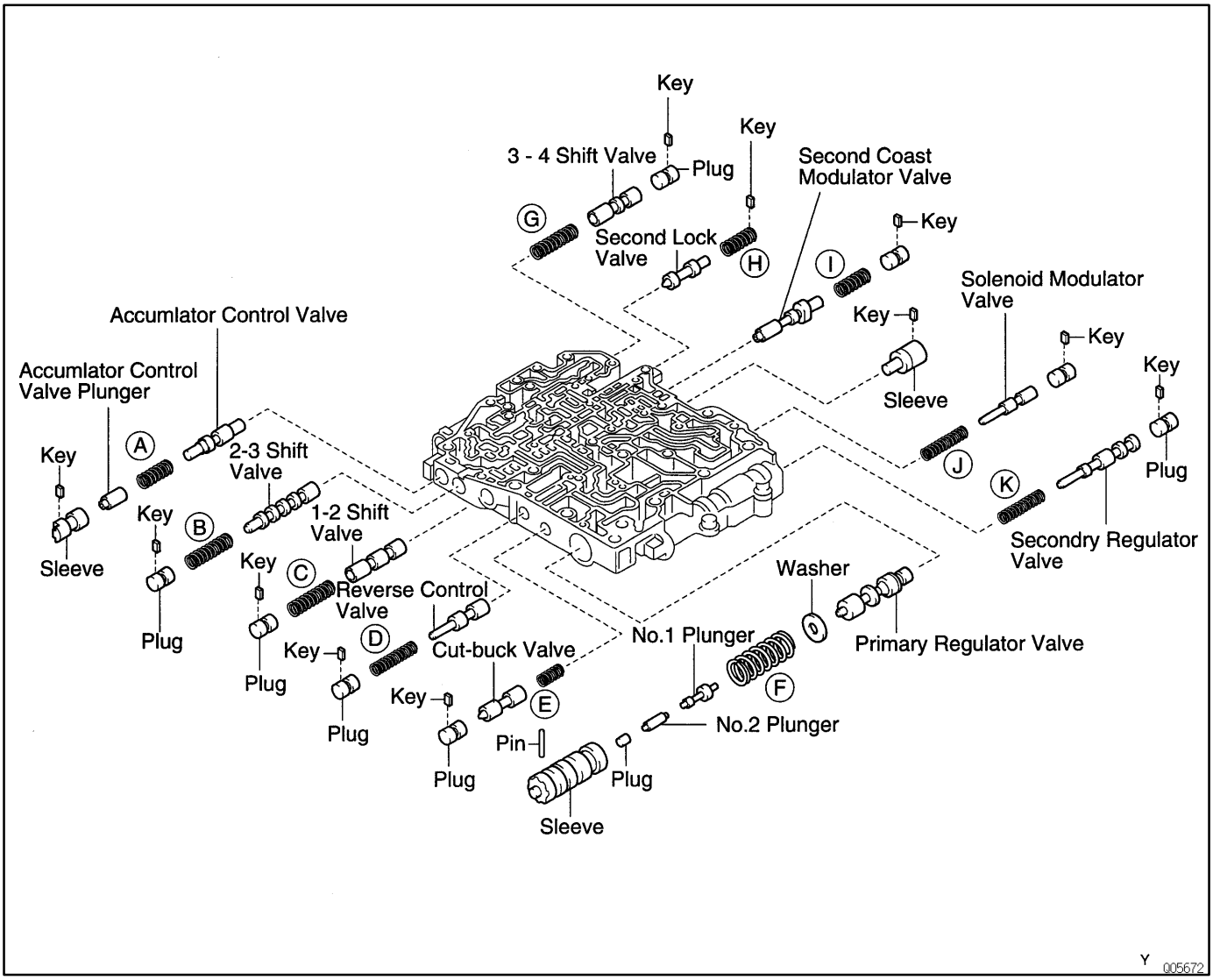

AX04B–03

VALVE BODY SPRINGS SPECIFICATIONS

HINT: During reassembly please refer to the spring specifications above to help discriminate between the different springs.

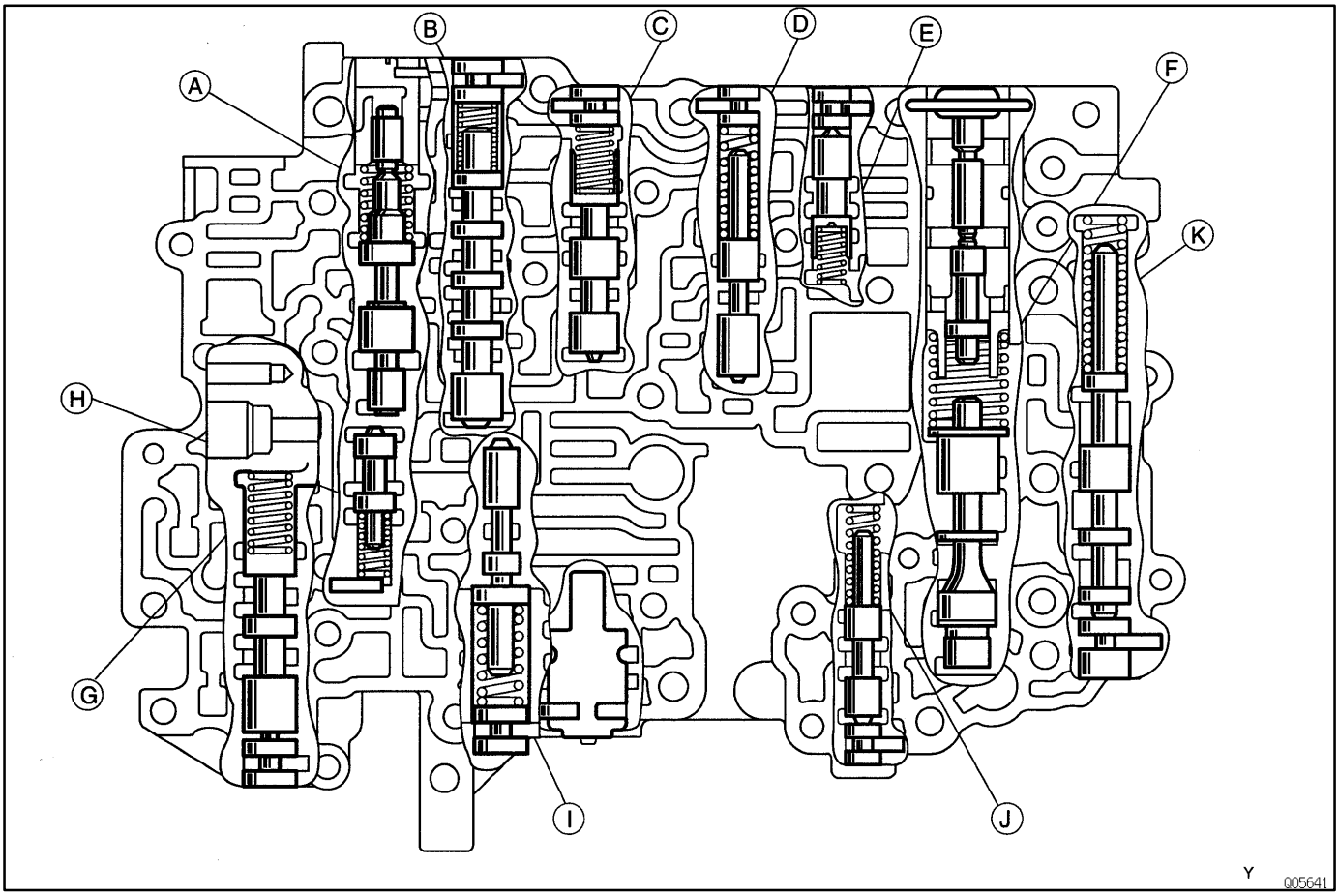

Mark	Name (Color)	Free Length / Outer Diameter mm (in.)	Total No. of Coils
@@@@@: [c A]	Accumulator Control Valve (Red)	25.1 (0.988) / 8.6 (0.339)	8.0
@@@@@: [c B]	2–3 Shift Valve (None)	28.0 (1.102) / 7.6 (0.299)	10.3
@@@@@: [c C]	1–2 Shift Valve (Light Green)	29.2 (1.150) / 8.9 (0.350)	12.0
@@@@@: [c D]	Reverse Control Valve (White/Purple)	38.1 (1.500) / 6.5 (0.256)	19.0

@@@@@: [c E]	Cut–Back Valve (None)	21.8 (0.858) / 6.0 (0.236)	13.5
@@@@@: [c F]	Primary Regulator Valve (None)	36.6 (1.441) / 16.1 (0.634)	6.3
@@@@@: [c G]	3–4 Shift Valve (None)	28.0 (1.102) / 7.6 (0.299)	10.3
@@@@@: [c H]	Second Lock Valve (None)	20.7 (0.815) / 7.4 (0.291)	9.5
@@@@@: [c I]	Second Coast Modulator Valve (White)	32.2 (1.268) / 9.0 (0.354)	11.4
@@@@@: [c J]	Solenoid Modulator Valve (Purple/Pink)	30.2 (1.189) / 5.6 (0.220)	15.3
@@@@@: [c K]	Secondary Regulator Valve (None)	46.9 (1.846) / 5.9 (0.232)	21.8

AX0TY–01

RETAINERS AND CHECK BALLS LOCATION

1. RETAINERS

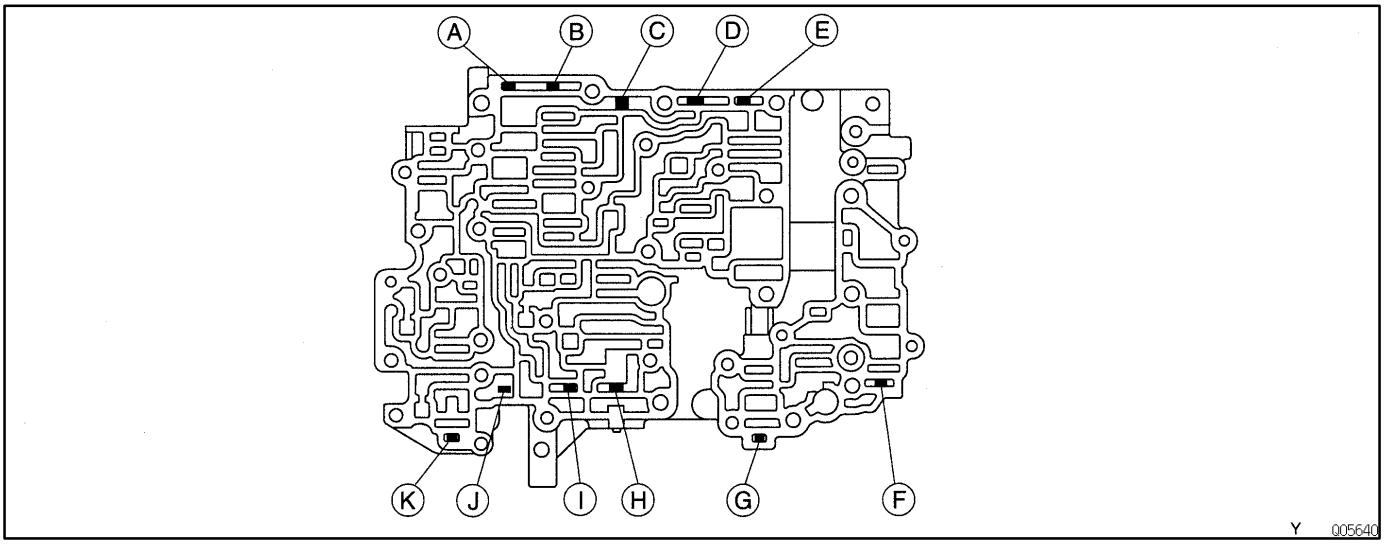

Mark	Name	Height / Width / Thickness mm (in.)
@@@@@: [c A]	Accumulator Control Valve	8.5 (0.335) / 5.0 (0.197) / 3.2 (0.126)
@@@@@: [c B]	2–3 Shift Valve	8.5 (0.335) / 5.0 (0.197) / 3.2 (0.126)
@@@@@: [c C]	1–2 Shift Valve	8.5 (0.335) / 5.0 (0.197) / 3.2 (0.126)
@@@@@: [c D]	Reverse Control Valve	8.5 (0.335) / 5.0 (0.197) / 3.2 (0.126)
@@@@@: [c E]	Cut–Back Valve	6.5 (0.256) / 5.0 (0.197) / 3.2 (0.126)
@@@@@: [c F]	Secondary Regulator Valve	11.0 (0.433) / 5.0 (0.197) / 3.2 (0.126)
@@@@@: [c G]	Solenoid Modulator Valve	8.5 (0.335) / 5.0 (0.197) / 3.2 (0.126)
@@@@@: [c H]	Lock–Up Control Valve	9.2 (0.362) / 5.0 (0.197) / 3.2 (0.126)
@@@@@: [c I]	Second Coast Modulator Valve	8.0 (0.315) / 5.0 (0.197) / 3.2 (0.126)
@@@@@: [c J]	Second Lock Valve	9.2 (0.362) / 11.5 (0.453) / 3.2 (0.126)
@@@@@: [c K]	3–4 Shift Valve	6.5 (0.256) / 5.0 (0.197) / 3.2 (0.126)

2. CHECK BALLS

Upper Side

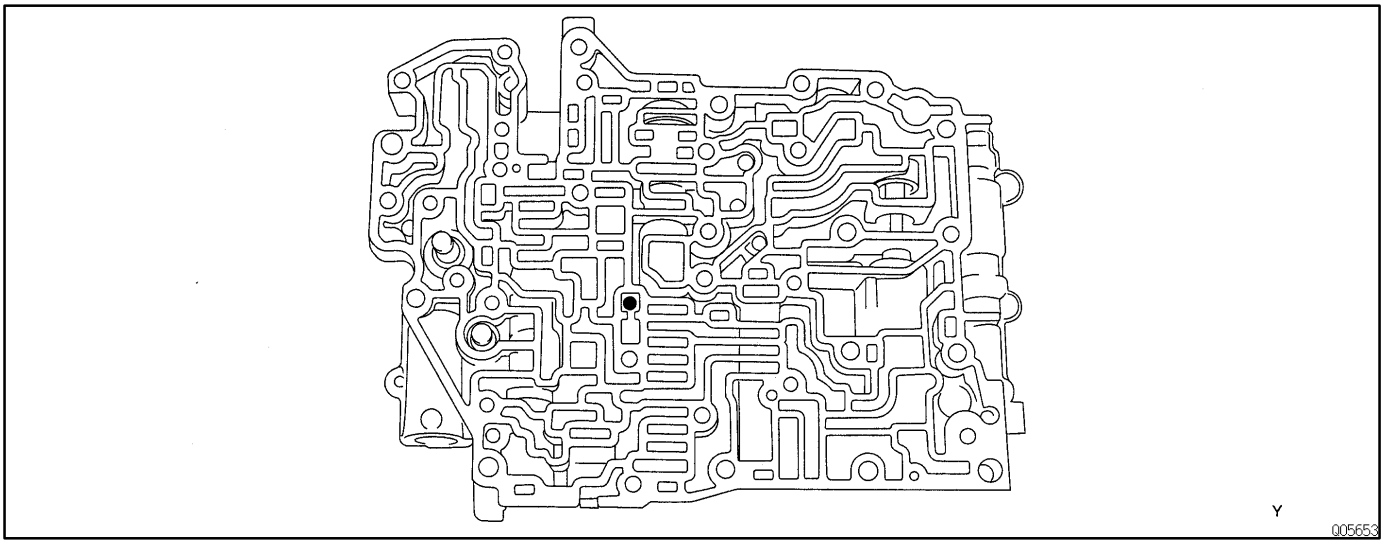

Lower Side

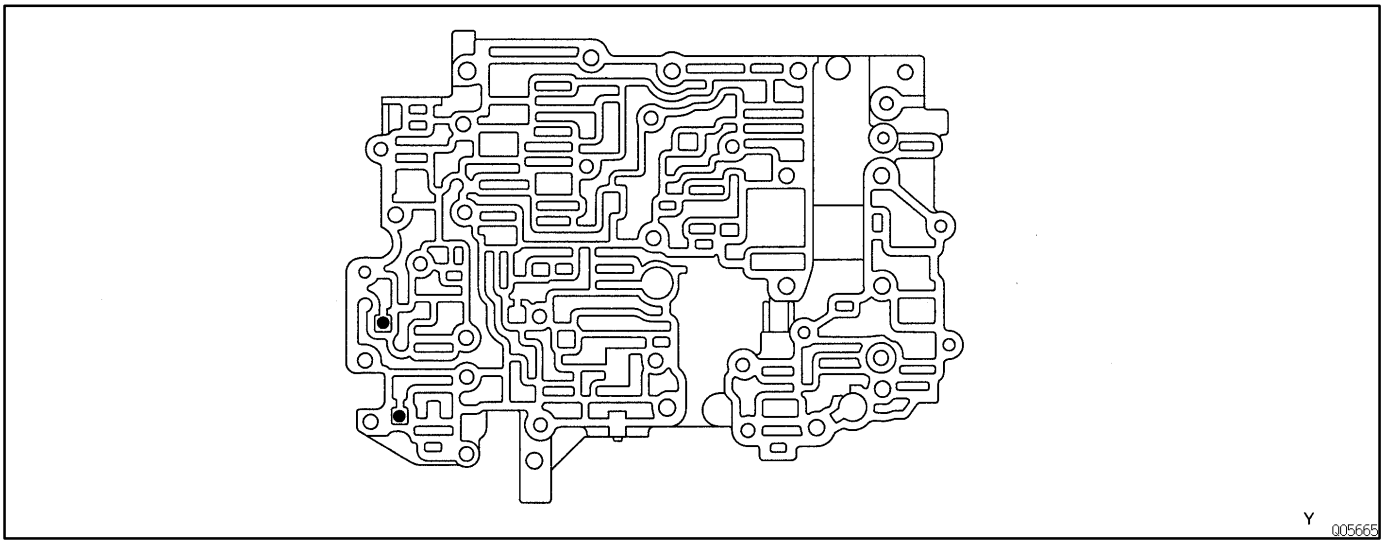

DIFFERENTIAL ASSEMBLY

AX04D–02

COMPONENTS

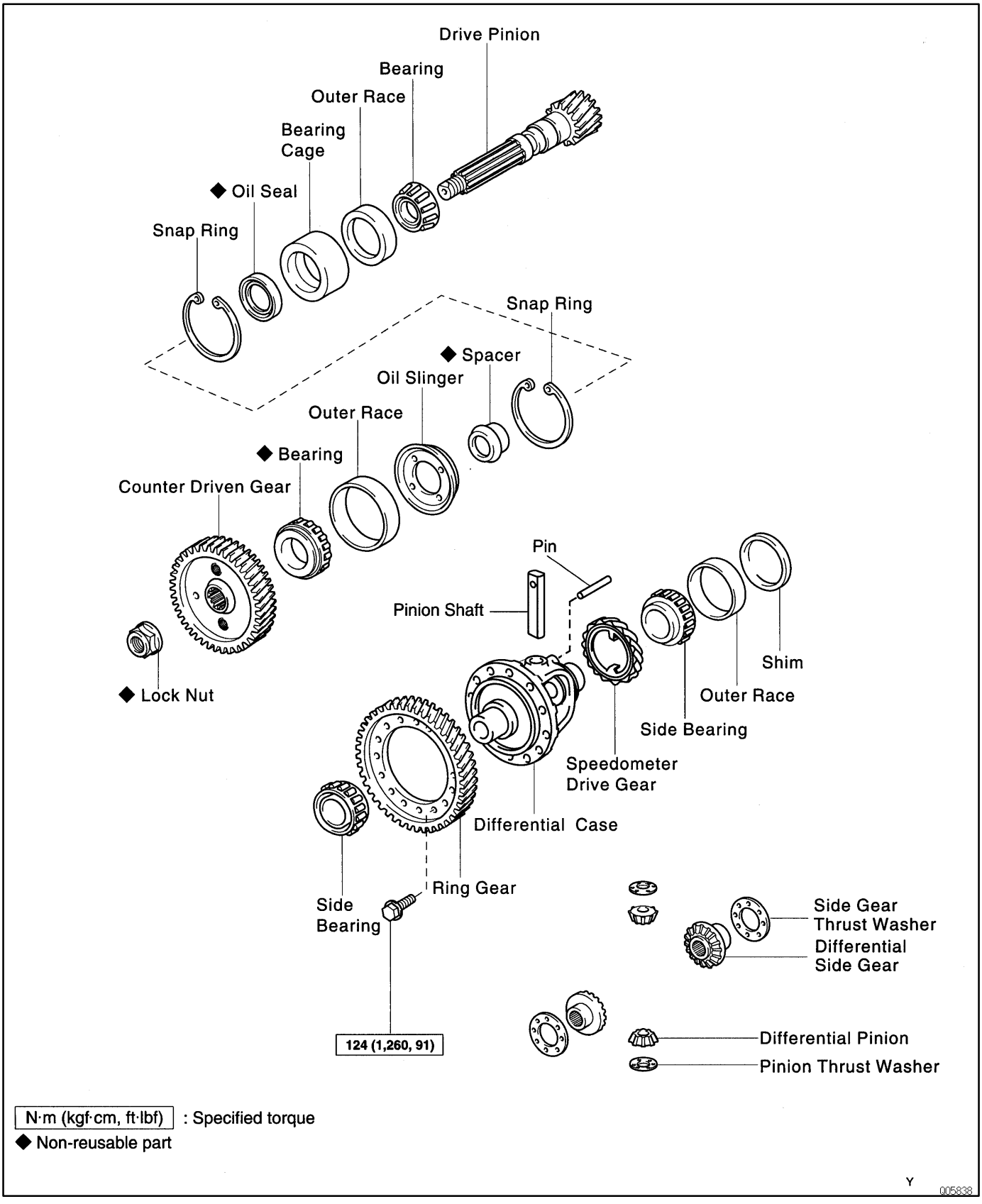

N·m (kgf·cm, ft·lbf) : Specified torque

◆ Non-reusable part

Y

005838

AX0TZ–02

DIFFERENTIAL CASE DISASSEMBLY

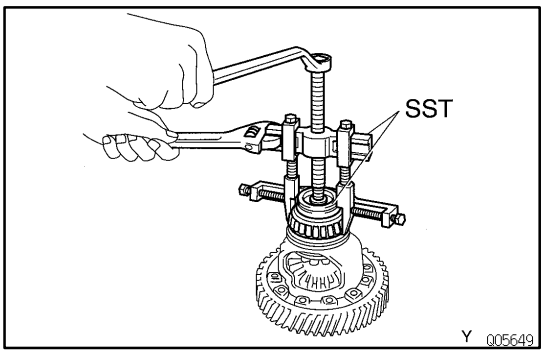

1. REMOVE SIDE BEARING

Using SST, remove the 2 side bearings.
SST 09608–16011, 09550–40010

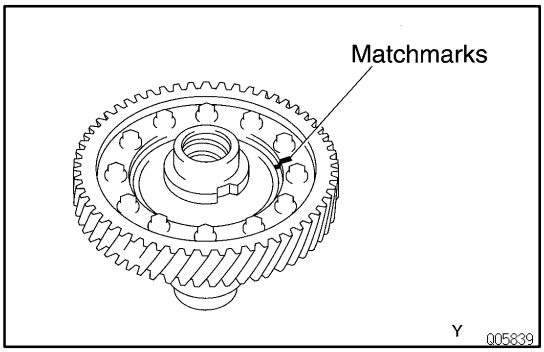

2. REMOVE RING GEAR

(a) Place matchmarks on both the differential case and ring gear.

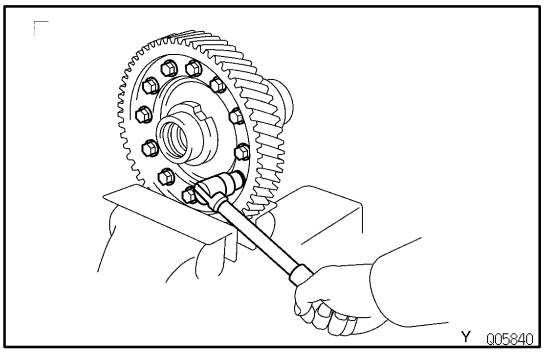

(b) Remove the 12 bolts.

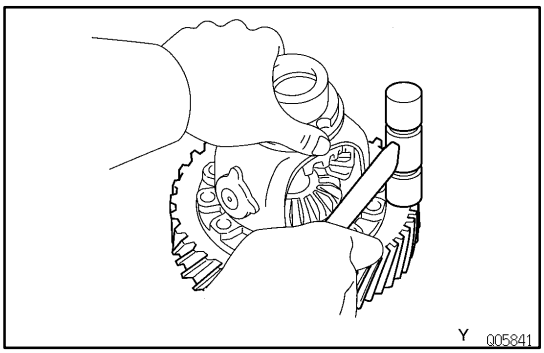

(c) Using a plastic hammer, tap out the ring gear.

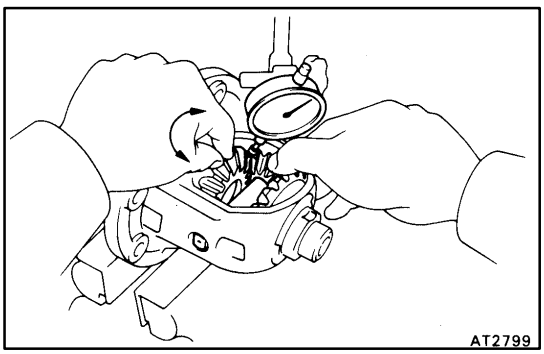

3. CHECK SIDE GEAR BACKLASH

Using a dial gauge, measure the backlash of each side gear while holding one pinion toward the case.

Standard backlash:

0.05 – 0.20 mm (0.0020 – 0.0079 in.)

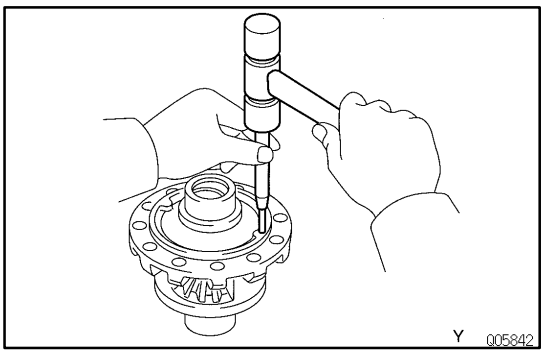

4. DISASSEMBLE DIFFERENTIAL CASE

(a) Drive out the pinion shaft lock pin from the side on which the ring gear is installed.

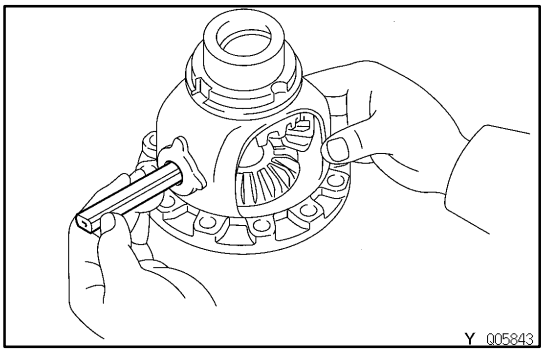

(b) Remove the pinion shaft from the case.

(c) Remove the 2 pinions and side gears with the 4 thrust washers.

AX0U0–02

DIFFERENTIAL CASE ASSEMBLY

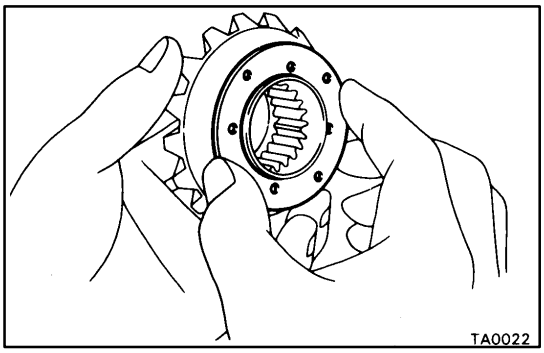

1. ASSEMBLE DIFFERENTIAL CASE

(a) Install the removed thrust washers to the side gears.

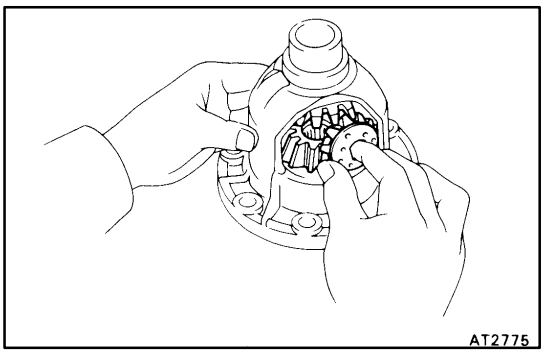

(b) Install the side gears with thrust washers, pinion thrust washers and pinion gears.

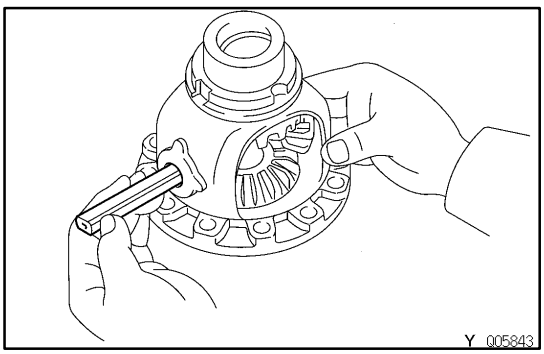

(c) Install the pinion shaft.

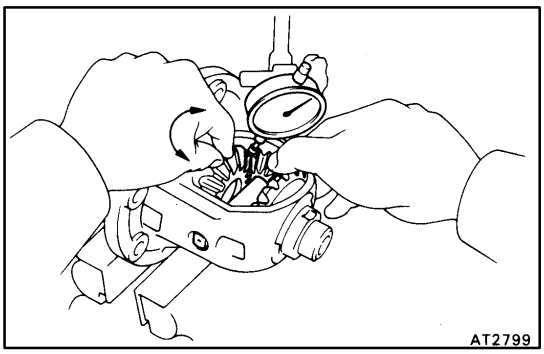

(d) Check the side gear backlash.
Measure the side gear backlash while holding one pinion gear toward the case.
Standard backlash:
0.05–0.20 mm (0.0020–0.0079 in.)
Refering to the table below, select thrust washers which will ensure that the backlash is within specification. Try to select washers of the same size for both sides.
Thrust washer thickness
mm (in.)

Thickness mm (in.)	Thickness mm (in.)
1.60 (0.0630)	1.70 (0.0670)
1.80 (0.0709)	

If the backlash is not within specification, install a thrust washer of a different thickness.

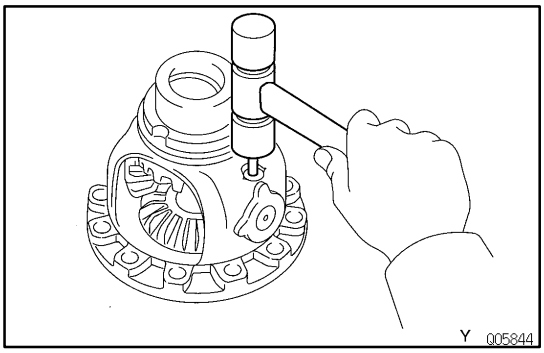

(e) Using a pin punch and hammer, drive the lock pin through the case and hole in the pinion shaft.
(f) Stake the differential case.

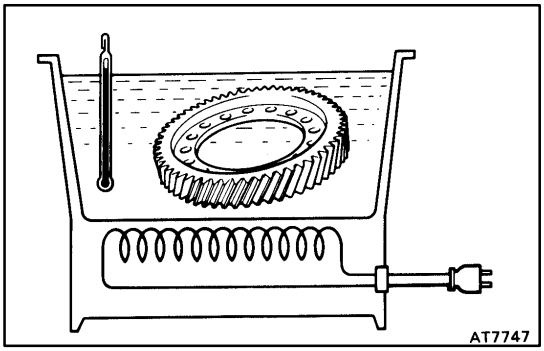

2. INSTALL RING GEAR
(a) Clean the contact surface of the differential case.
(b) Heat the ring gear to about 100˚C (212˚F) in an oil bath.
NOTICE: Do not heat the ring gear above 110˚C (230˚F).
(c) Carefully remove the ring gear from the oil bath.
(d) Clean the contact surface of the ring gear with cleaning solvent.

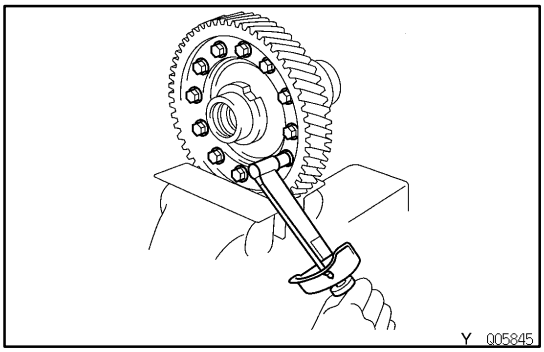

(e) Quickly install the ring gear on the differential case.
Install the 12 bolts.
HINT: Align the matchmarks on the differential left case and contact the ring gear.
(f) Tighten the set bolts uniformly a little at a time.
Torque the bolts.
Torque: 124 N·m (1,260 kgf·cm, 91 ft·lbf)

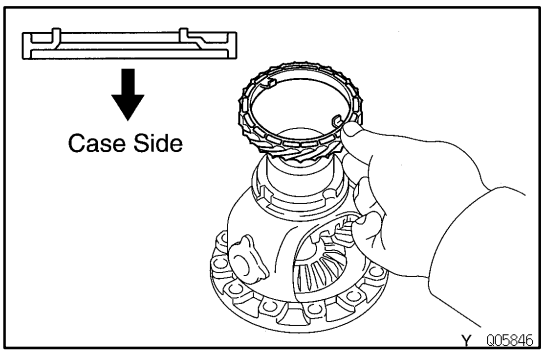

3. INSTALL SIDE BEARING

(a) Install the speedometer drive gear onto the differential case.

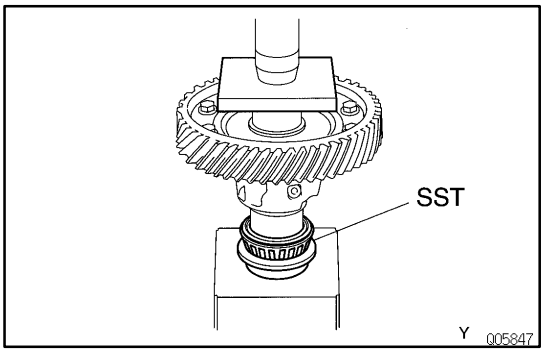

(b) Using SST and a press, press in the RH side bearing onto the differential case.
SST 09316–20011

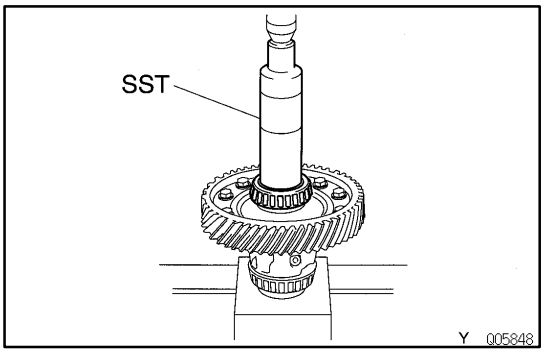

(c) Using SST and a press, press in the LH side bearing onto the differential case.
SST 09316–60010 (09316–00010)

COMPONENT PARTS INSTALLATION

AX04G–06

Disassembly, inspection and assembly of each component group have been indicated in the preceding chapter. Before assembly, make sure, again, that all component groups are assembled correctly.
If something wrong is found in a certain component group during assembly, inspect and repair this group immediately.
Recommended ATF: D–@@@@@: [g 2] or DEXRON®@@@@@: [g 3](DEXRON®@@@@@: [g 2])

AX04H–03

GENERAL INSTALLATION NOTES:

(a) The automatic transaxle is composed of highly precision–finished parts, necessitating careful inspection before assembly because even a small nick could cause fluid leakage or affect performance.
(b) Before assembling new clutch discs, soak them in automatic transaxle fluid for at least 15 minutes.
(c) Apply automatic transaxle fluid on the sliding or rotating surfaces of parts before assembly.
(d) Use petroleum jelly to keep small parts in their places.
(e) Do not use adhesive cements on gaskets and similar parts.
(f) When assembling the transaxle, be sure to use new gaskets and O–rings.
(g) Dry all parts with compressed air–never use shop rags.
(h) Be sure to install the thrust bearings and races in the correct direction and position.

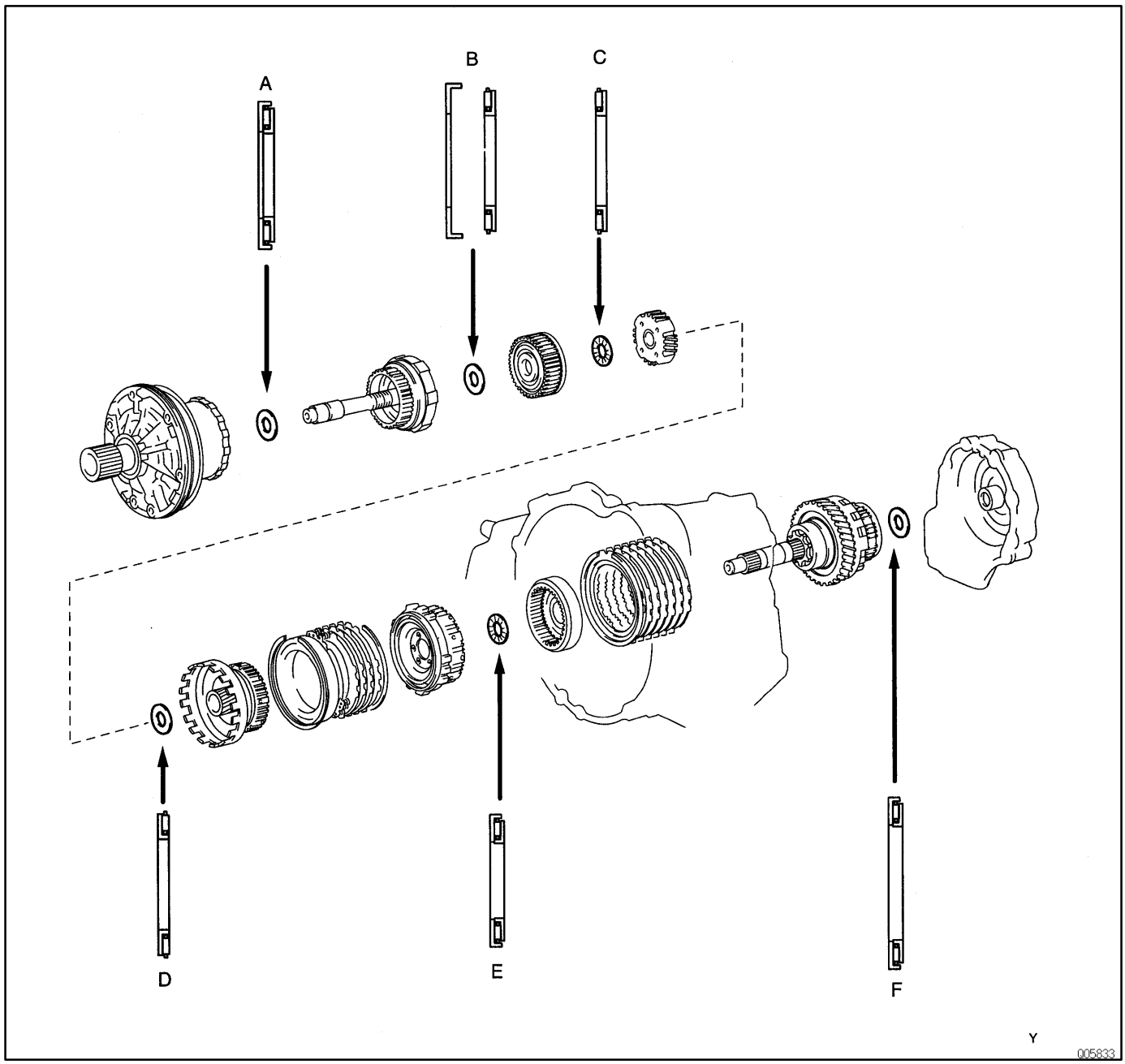

Mark	Thrust Bearing Outside Diameter mm (in.)	Thrust Bearing Inside Diameter mm (in.)
A	See page AX–118	27.7 (1.091)
B	47.6 (1.874)	31.4 (1.236)
C	45.5 (1.791)	30.1 (1.185)
D	45.5 (1.791)	30.1 (1.185)
E	38.7 (1.524)	22.6 (0.890)
F	46.3 (1.823)	28.6 (1.126)

AX0U1–02

DIFFERENTIAL AND DRIVE PINION INSTALLATION

1. INSTALL DRIVE PINION INTO TRANSAXLE CASE

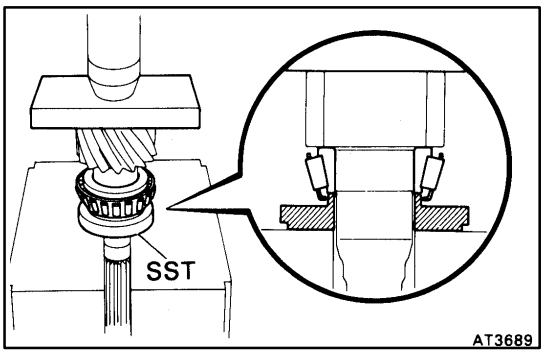

(a) Using SST, install the bearing to the drive pinion shaft.
SST 09350–32014 (09351–32120)

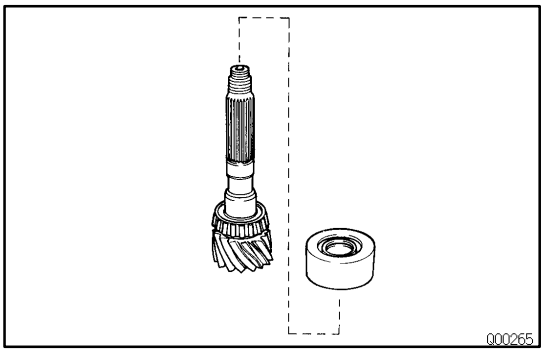

(b) Place the bearing cage onto the drive pinion shaft.
NOTICE: Be careful not to damage the oil seals with the pinion shaft.

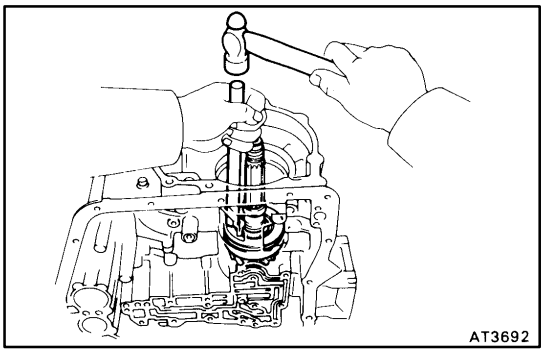

(c) Using a brass bar and hammer, slightly tap the bearing cage into the transaxle case until the snap ring groove in the bore can be seen.

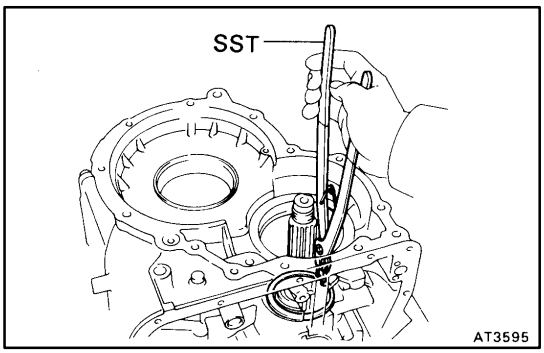

(d) Using SST, install snap ring into the bore.
SST 09350–32014 (09351–32050)

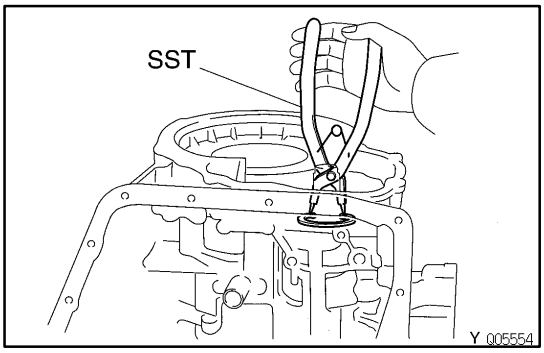

(e) Using SST, install the snap ring.
SST 09350–32014 (09351–32050)

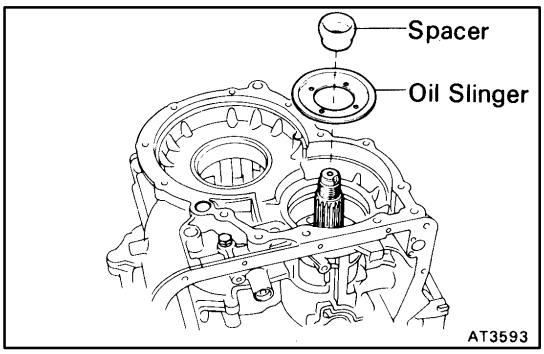

2. PLACE OIL SLINGER AND NEW SPACER

HINT: Install the spacer with the small end downward.

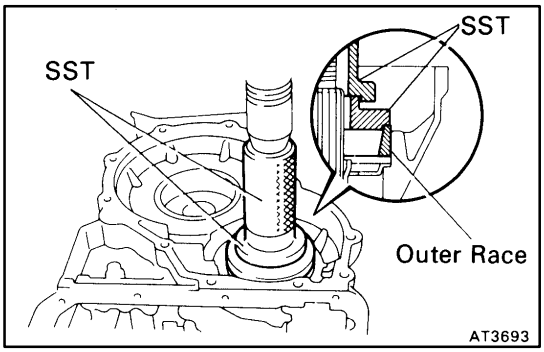

3. INSTALL OUTER RACE TO TRANSAXLE CASE

Using SST, press in the outer race.

SST 09350–32014 (09351–32100, 09351–32140)

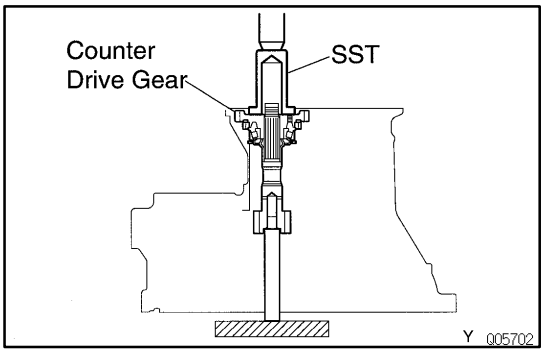

4. INSTALL COUNTER DRIVE GEAR

(a) Place a brass bar into the transaxle hole to hold the drive pinion shaft.

(b) Using SST, press in the counter driven gear until the counter driven gaer bearing almost touches the counter gear.

SST 09350–32014 (09351–32140)

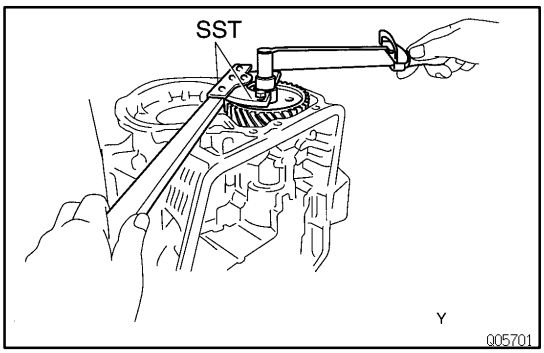

5. INSTALL NEW LOCK NUT AND ADJUST DRIVE PINION PRELOAD

(a) Install the new lock nut.

(b) Using SST to hold the gear, tighten the nut.

Torque: 280 N·m (2,855 kgf·cm, 206 ft·lbf)

SST 09330–00021, 09350–32014 (09351–32032)

(c) Turn the gear counterclockwise and clockwise several times.

(d) Using a small torque wrench, measure the preload of the drive pinion.

Drive pinion preload (at starting):

New bearing

1.0–1.6 N·m (10–16 kgf·cm, 8.7–13.9 in.·lbf)

Reused bearing

0.5–0.8 N·m (5–8 kgf·cm, 4.3–6.9 in.·lbf)

- If the preload is greater than specified, replace the bearing spacer.

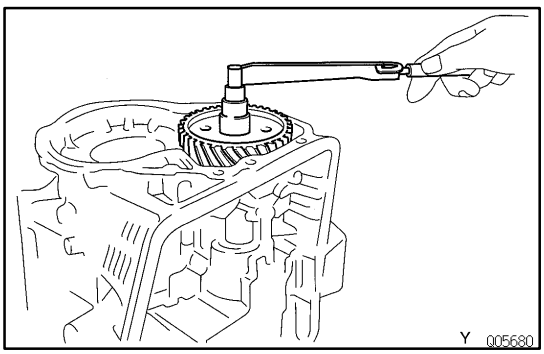

- If the preload is less then specified, retighten the nut 13 N·m (130 kgf·cm, 9 ft·lbf) at a time until the specified preload is reached.

If the maximum torque is exceeded while retightening the nut, replace the bearing spacer and repeat the preload procedure.

Do not back off the nut to reduce the preload.

Maximum torque: 353 N·m (3,600 kgf·cm, 260 ft·lbf)

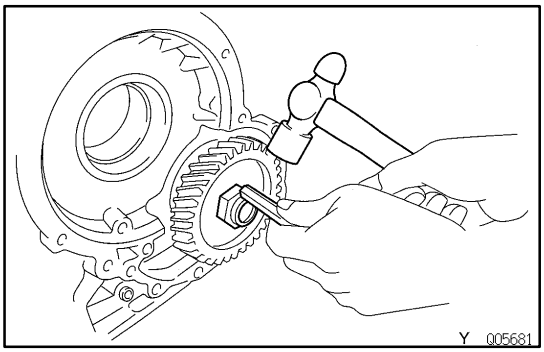

(e) If the preload is adjusted within specification, make a note of it.

(f) Stroke the lock nut.

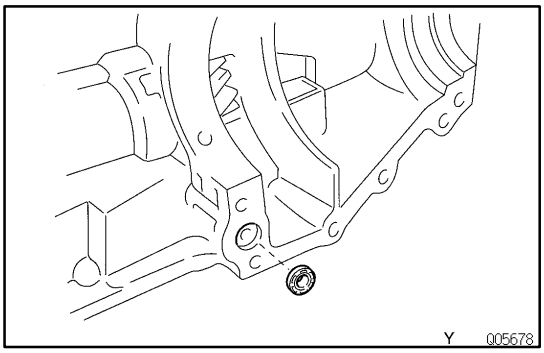

6. INSTALL APPLY GASKET

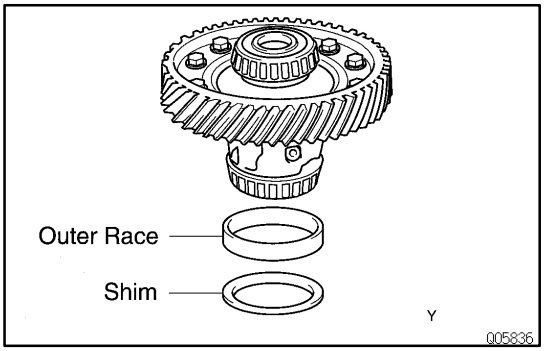

7. PLACE OUTER RACE AND SHIM ONTO RH SIDE BEARING

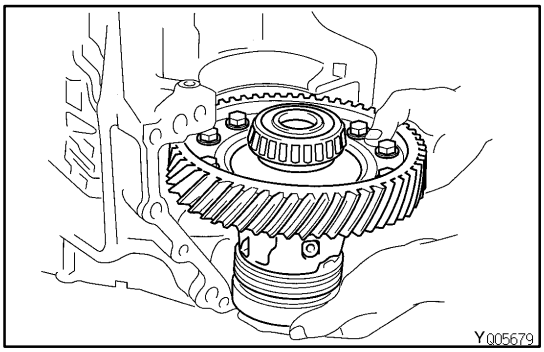

8. PLACE DIFFERENTIAL CASE INTO TRANSAXLE CASE

Be sure to install the shim and outer race into place.

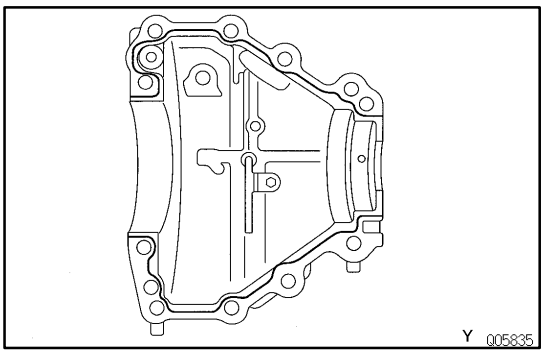

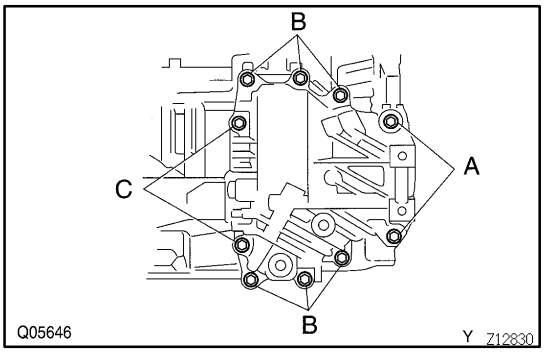

9. INSTALL CARRIER COVER

(a) Remove any packing material and be careful not to drop oil on the contacting surfaces of the carrier cover and transaxle case.

(b) Apply seal packing to the carrier cover.

Seal packing:

Part No.08826–00090, THREE BOND 1281 or equivalent

HINT: Install the carrier cover within 10 minutes after applying seal packing.

(c) Install and torque the 11 bolts.

Torque: 39 N·m (400 kgf·cm, 29 ft·lbf)

HINT: Each bolt length is indicated below.

Bolt length:

Bolt A: 100 mm (3.937 in.)

Bolt B: 65 mm (2.559 in.)

Bolt C: 75 mm (2.953 in.)

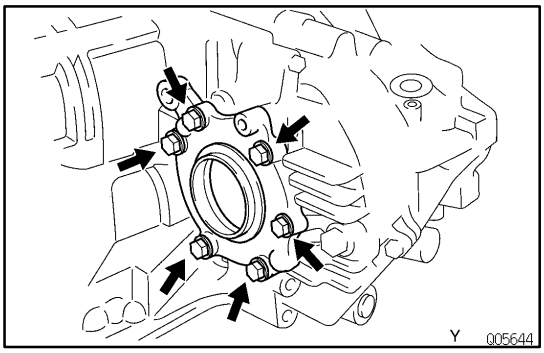

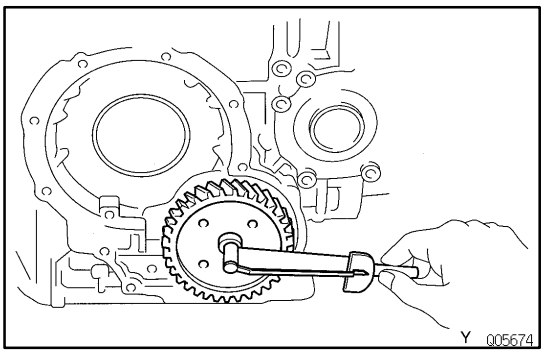

10. ADJUST SIDE BEARING PRELOAD

(a) Remove any packing material on the contacting surfaces of the LH bearing retainer and transaxle case.

HINT: Do not apply seal packing yet.

(b) Install the LH bearing retainer and torque the 6 bolts.

Torque: 19 N·m (195 kgf·cm, 14 ft·lbf)

(c) Snap down the bearings by turning the differential case several times.

(d) Using a small torque wrench, measure the differential total preload.

Total preload (at starting):

New bearing

Drive pinion preload plus 0.2–0.4 N·m

(2.5–5.1 kgf·cm, 2.2–3.6 in.·lbf)

Reused bearing

Drive pinion preload plus 0.1–0.2 N·m

(1.3–2.0 kgf·cm, 1.1–1.7 in.·lbf)

If the preload is not within specification, replace the adjusting shim in the LH bearing retainer with one of a different thickness.

AT3700:Adjusting shim thickness

mm (in.)

Mark	Thickness	Mark	Thickness
0	2.00 (0.0787)	9	2.45 (0.0965)
1	2.05 (0.0807)	A	2.50 (0.0984)
2	2.10 (0.0827)	B	2.55 (0.1004)
3	2.15 (0.0846)	C	2.60 (0.1024)
4	2.20 (0.0866)	D	2.65 (0.1043)
5	2.25 (0.0886)	E	2.70 (0.1063)
6	2.30 (0.0906)	F	2.75 (0.1083)
7	2.35 (0.0925)	G	2.80 (0.1102)
8	2.40 (0.0945)	H	2.85 (0.1122)

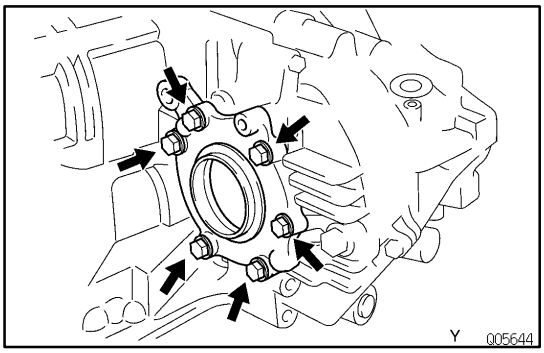

11. INSTALL LH BEARING RETAINER

(a) Remove the 6 bolts and LH bearing retainer.

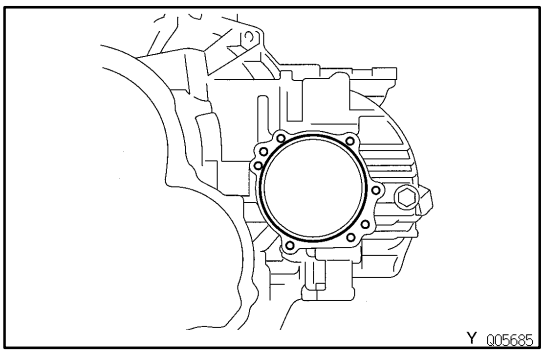

(b) Remove any FIPG material on the contacting surfaces of LH bearing retainer, transaxle case and carrier cover.

(c) Apply FIPG to the transaxle case and carrier cover.

FIPG: Part No.08826–00090, THREE BOND 1281 or equivalent

HINT: Install the LH bearing retainer within 10 minutes after applying FIPG.

(d) Install the LH bearing retainer.

(e) Coat the threads of bolts with sealer.

Sealer: Part No.08833–00070, THREE BOND 1324 or equivalent

(f) Tighten the bolts.

Torque: 19 N·m (195 kgf·cm, 14 ft·lbf)

(g) Snap down the bearings.

(h) Recheck the differential total preload.

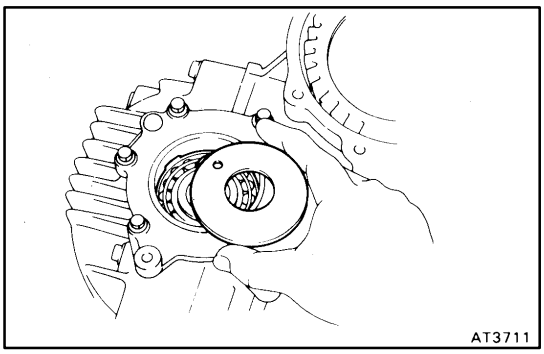

12. INSTALL NEW OIL SEAL

(a) Place the oil baffle onto the LH bearing retainer.

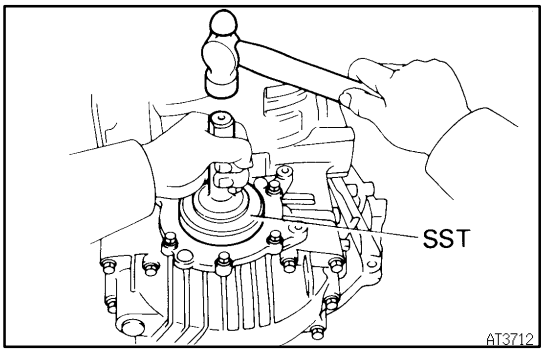

(b) Using SST, drive in a new oil seal unit its end is flush with surface of the LH bearing retainer.
SST 09223–15010

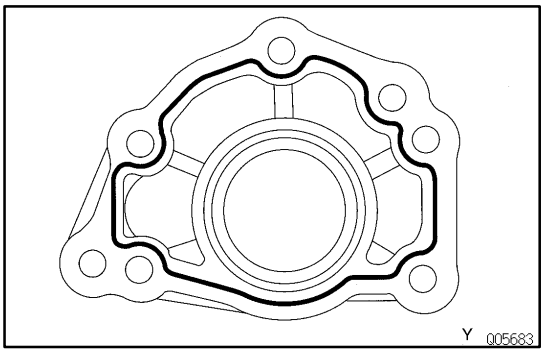

13. INSTALL RH RETAINER

(a) Remove any FIPG material on the contacting surfaces of RH retainer and transaxle case.

(b) Apply FIPG to the RH retainer.
FIPG: Part No.08826–00090, THREE BOND 1281 or equivalent
HINT: Install the RH retainer within 10 minutes after applying FIPG.

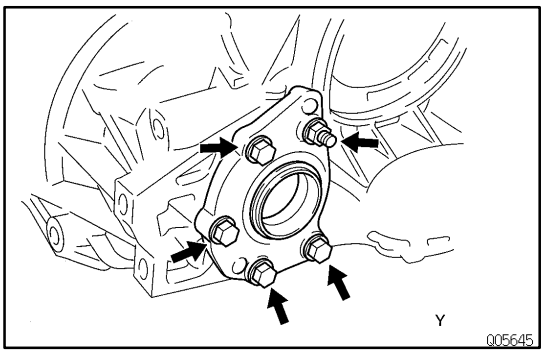

(c) Coat the bolts' threads with sealer.
Sealer: Part No.08833–00070, THREE BOND 1324 or equivalent

(d) Tighten the bolts.
Torque: 19 N·m (195 kgf·cm, 14 ft·lbf)

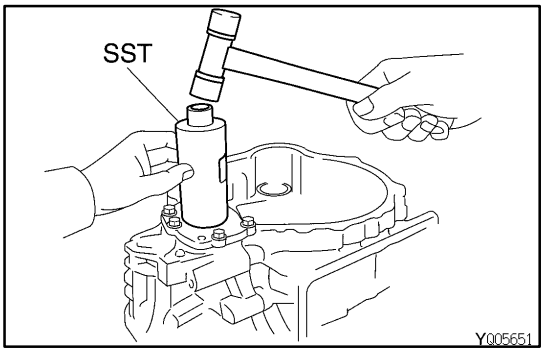

(e) Using SST, press in the oil seal.
SST 09226–10010

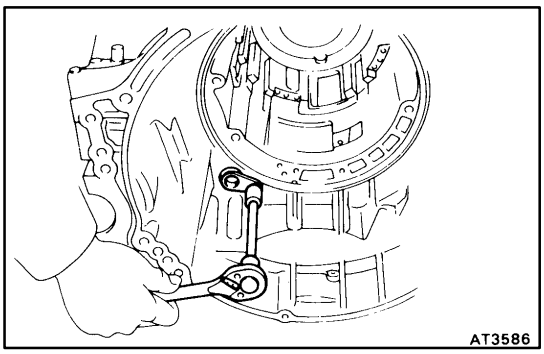

14. INSTALL DRIVE PINION CAP

(a) Install a new O–ring to the cap.

(b) Install the drive pinion cap to the transaxle case.

AX0U2–03

4–SPEED GEAR UNIT INSTALLATION

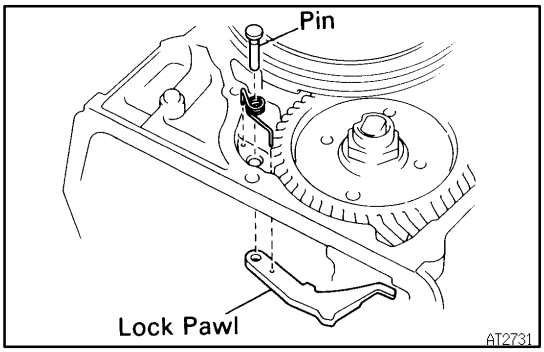

1. INSTALL PARKING LOCK PAWL

(a) Place the parking lock pawl onto the case.
Hook the spring ends to the case and pawl.

(b) Instal the pin into the hole of the case through the spring and pawl.

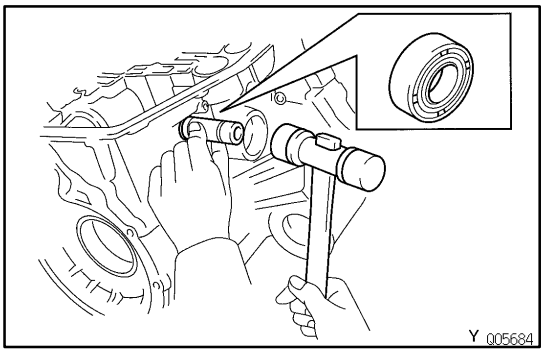

2. INSTALL MANUAL VALVE SHAFT

(a) Coat the oil seal lip with MP grease.

(b) Install the manual valve shaft oil seal to the case.

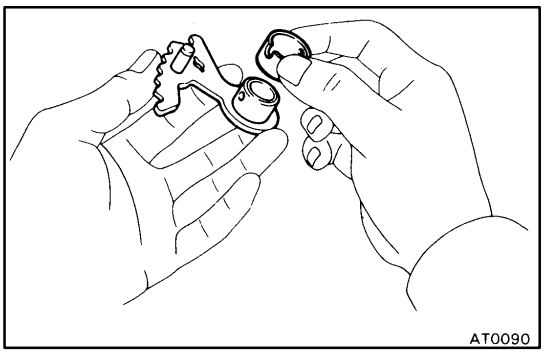

(c) Assembly a new collar to the manual valve lever.

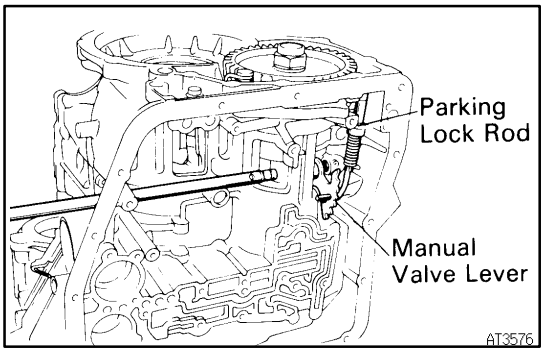

(d) Install the manual valve shaft to the transmission case through the manual lever.

(e) Install the parking lock rod.

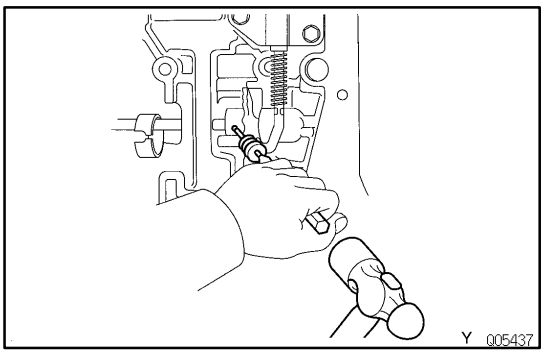

(f) Using a pin punch, drive in the roll pin until its surface is flush with the manual valve lever surface.

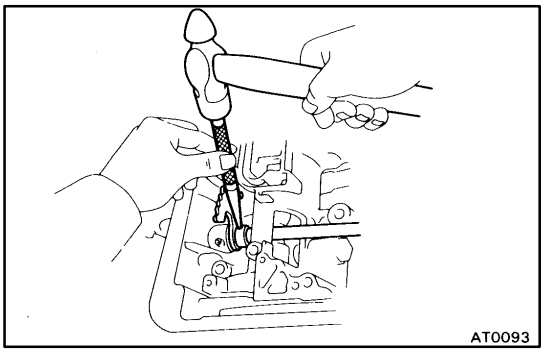

(g) Match the collar hole to the lever caulking hollow and caulk the collar to the lever.

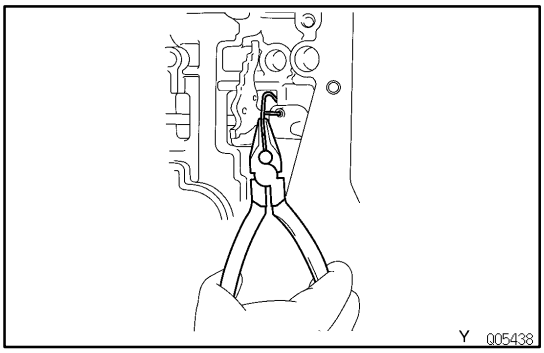

(h) Install the retaining spring.

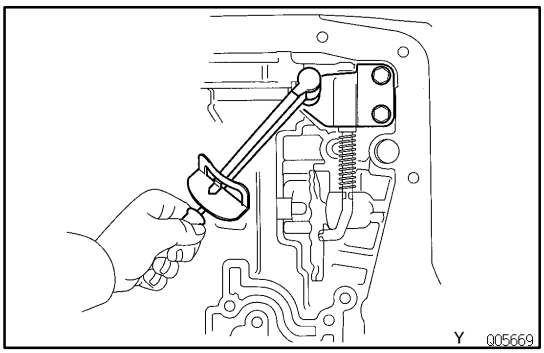

3. INSTALL PARKING LOCK PAWL BRACKET AND GUIDE

Torque: 7.4 N·m (75 kgf·cm, 65 in.·lbf)

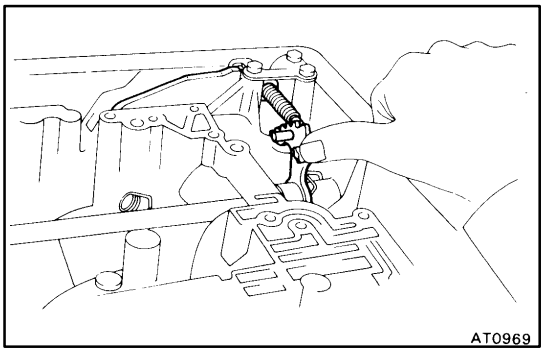

4. CHECK OPERATION OF PARKING LOCK PAWL

Make sure the counter driven gear is locked when the manual valve lever is in the P position.

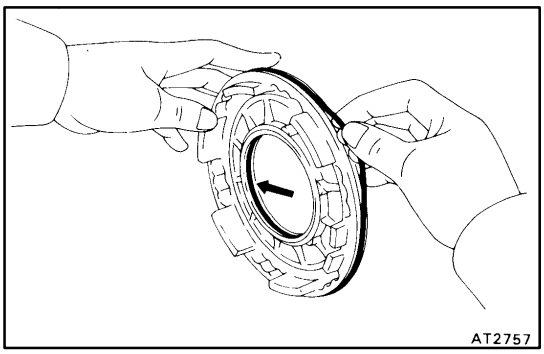

5. INSTALL FIRST AND REVERSE BRAKE PISTON TO TRANSMISSION CASE

(a) Coat the new O–rings with ATF.

(b) Install the 2 O–rings on the piston.

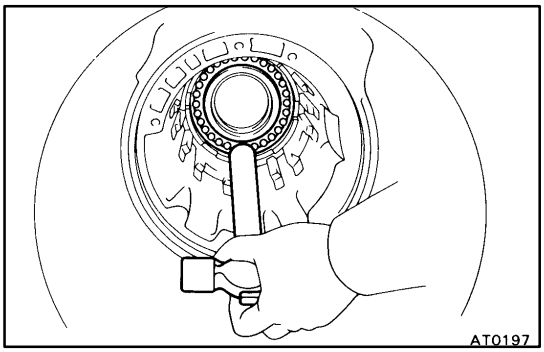

(c) Push the piston into the bore of the case, facing the spring seat upward.

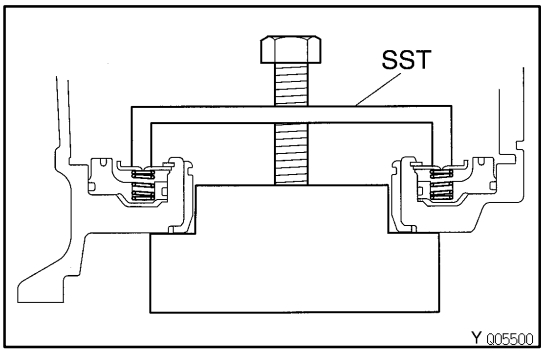

6. INSTALL PISTON RETURN SPRING

(a) Place the return spring and snap ring on the piston.

(b) Place SST, and compress the return spring evenly by tightening the bolt gradually.
SST 09350–32014 (09351–32040)

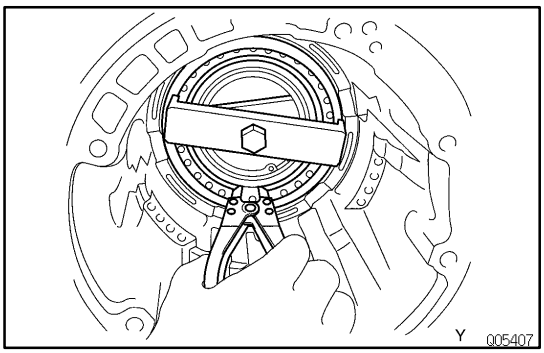

(c) Install snap ring. Visually check to make sure it is fully seated and centered by the 3 lugs on the spring retainer. Be sure the end gap of snap ring is not aligned with the spring retainer claw.

(d) Remove the SST.

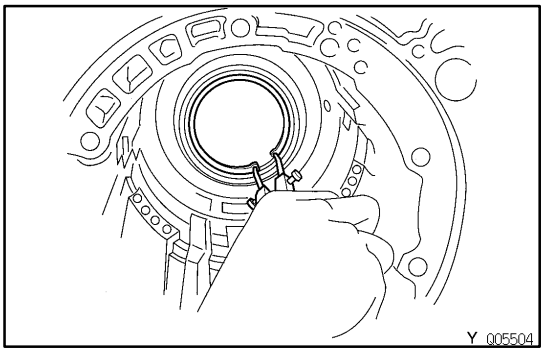

7. INSTALL SNAP RING TO TRANSAXLE CASE

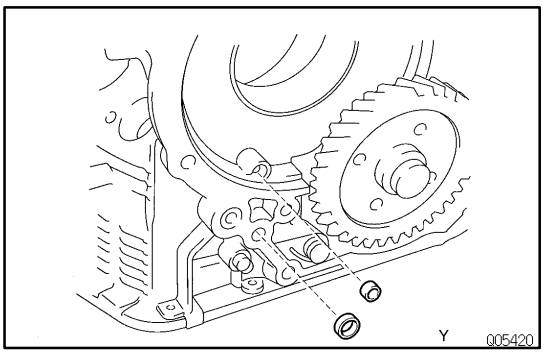

8. INSTALL OVERDRIVE UNIT

(a) Install the overdrive brake apply gasket and overdrive clutch apply gasket.

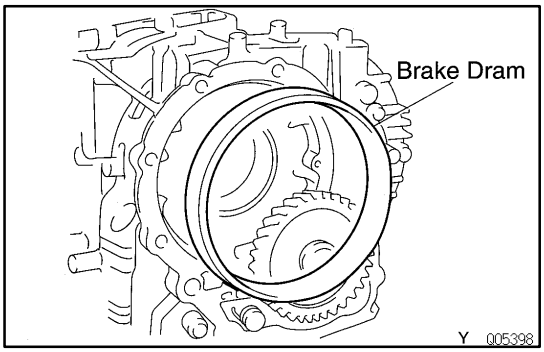

(b) Install the overdrive brake drum to the case.
(c) Install the new case gasket to the case.

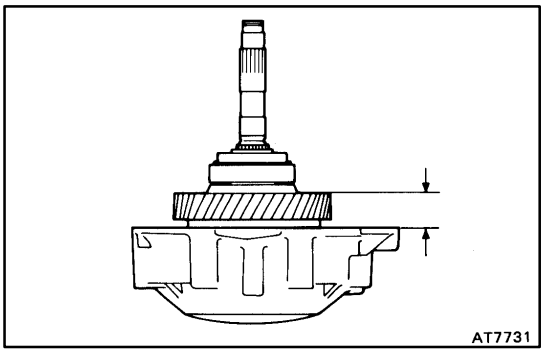

(d) Make sure that the length from the top surface of the case to the counter driven gear surface should be about 24 mm (0.94 in.).

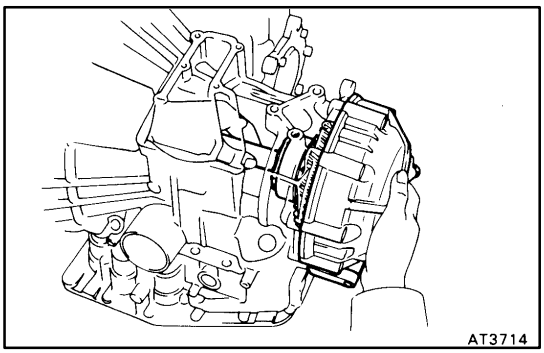

(e) Place the new gasket onto the transaxle case.
(f) Install the overdrive assembly with overdrive case to the transaxle case.

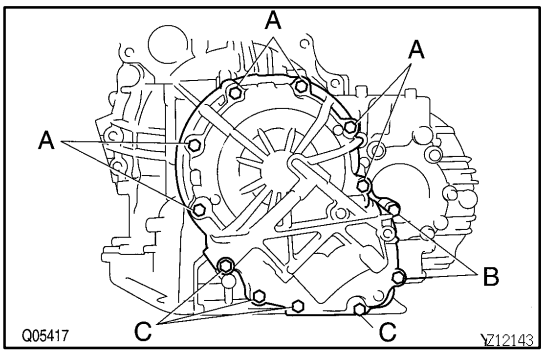

(g) Coat the threads of 23 mm (0.91 in.) bolts with sealer.
Sealer:
Part No.08833–00070, THREE BOND 1324 or equivalent

(h) Install and tighten the 13 bolts.
HINT: Each bolt length is indicated below.
Bolt length:
Bolt A: 61 mm (2.402 in.)
Bolt B 38 mm (1.496 in.)
Bolt C: 23 mm (0.906 in.)
Torque: 25 N·m (250 kgf·cm, 18 ft·lbf)

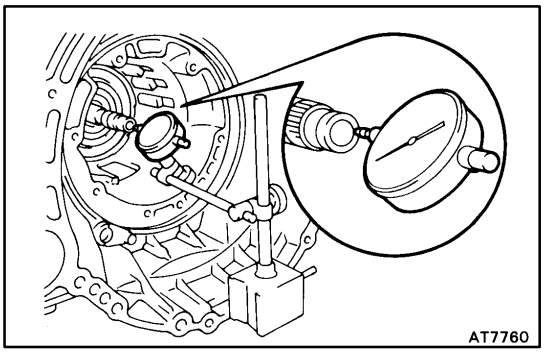

9. CHECK INTERMEDIATE SHAFT END PLAY

(a) Make sure that the intermediate shaft as end play in axial direction.
End play: 0.47–1.50 mm (0.0185–0.0591 in.)
If the end play is not within specification, check the installation of intermediate shaft.

(b) Make sure that the intermediate shaft turns smoothly.

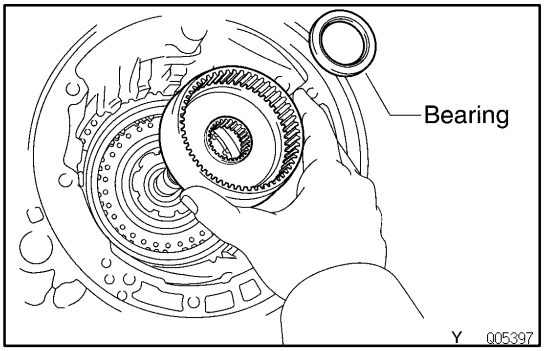

10. INSTALL REAR PLANETARY GEAR

(a) Install the rear planetary ring gear.

(b) Place the bearing onto the ring gear.
Bearing outer diameter: 38.7 mm (1.524 in.)
Bearing inner diameter: 22.6 mm (0.890 in.)

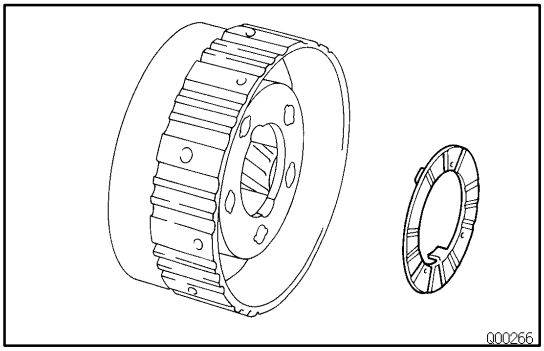

(c) Coat the thrust washer with petroleum jelly and place it onto the rear planetary gear.

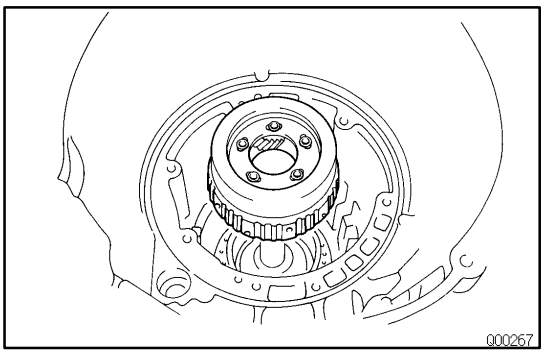

(d) Install the rear planetary gear.

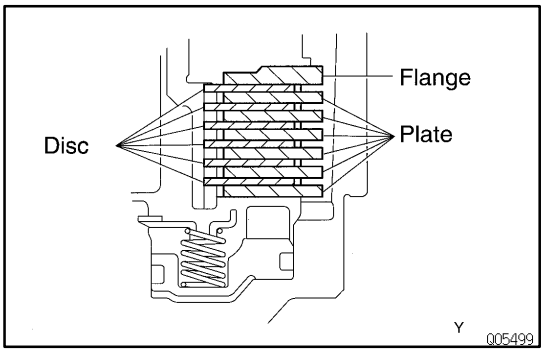

11. INSTALL DISCS, PLATES AND FLANGE OF FIRST AND REVERSE BRAKE

(a) Install the 6 plates and discs.
Install in order:
P=Plate D=Disc
P–D–P–D–P–D–P–D–P–D–P–D

(b) Install the flange, facing the flat end downward.

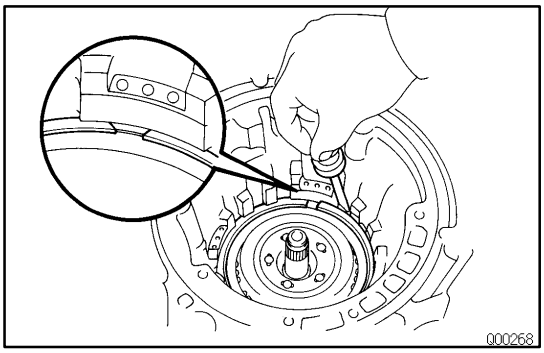

(c) Install the snap ring.
HINT: Be sure that the end gap of the snap ring is not aligned with one of the cutouts.

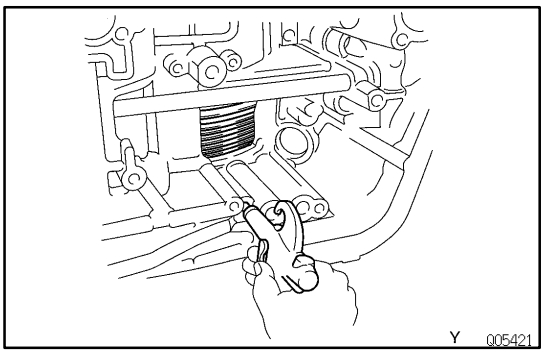

12. CHECK FIRST AND REVERSE BRAKE

(a) Check the operation of the first and reverse brake piston.
Apply compressed air into the case passage and confirm that the piston moves.

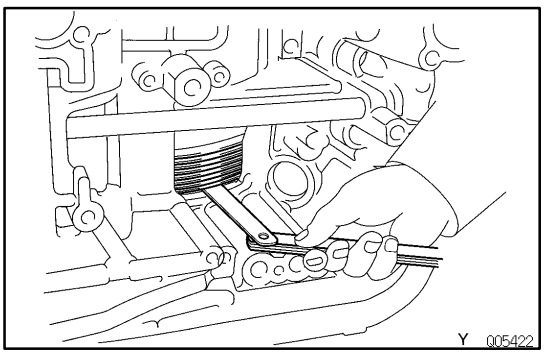

(b) Using a filler gauge, check that pack clearance of the first and reverse brake.
Clearance:
1.92–2.68 mm (0.0756–0.1055 in.)

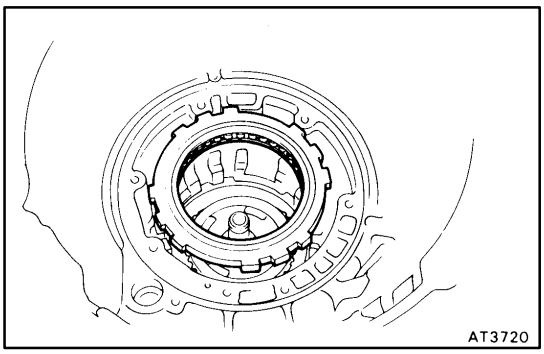

13. INSTALL NO.2 ONE–WAY CLUTCH INTO CASE

(a) Place the No.2 one–way clutch with the shiny side of flange upward.

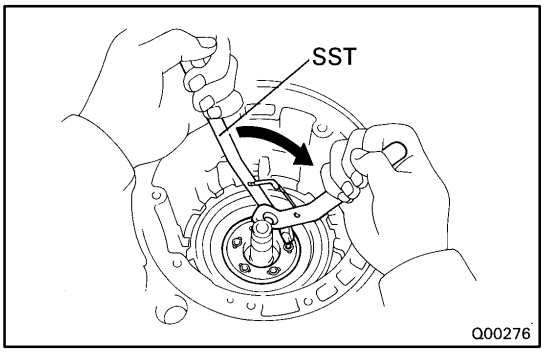

(b) Install the one–way clutch while turning the planetary gear clockwise with SST.
SST 09350–32014 (09351–32050)
If the planetary gear cannot turn clockwise, check the installation of the one–way clutch.

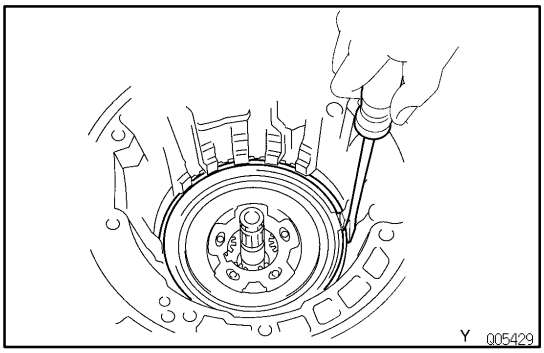

(c) Install the snap ring.
HINT: Be sure that the end gap of the snap ring is not aligned with one of cutouts.

(d) Coat the thrust washer with petroleum jelly and install it onto the rear planetary gear.

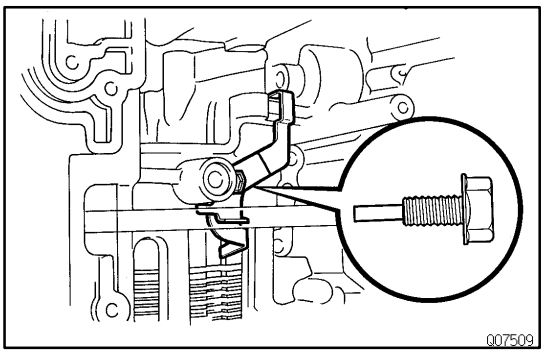

14. INSTALL SECOND COAST BRAKE BAND GUIDE

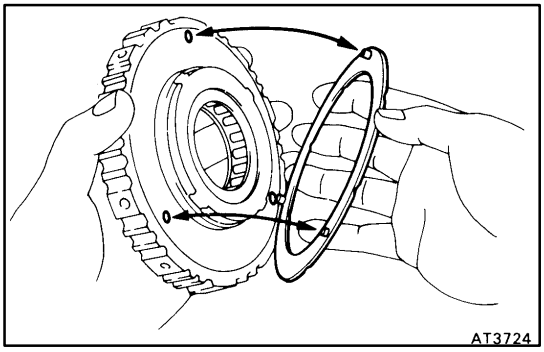

15. PLACE NO.1 ONE–WAY CLUTCH

(a) Coat the thrust washer with petroleum jelly and install it on the No.1 one–way clutch.

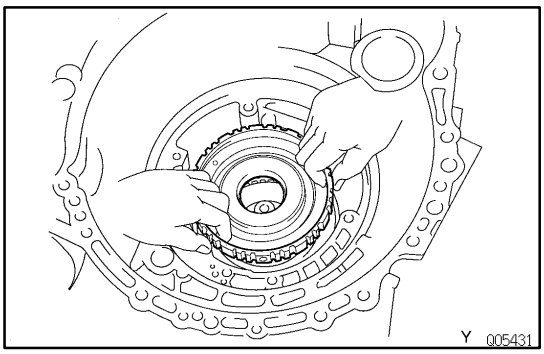

(b) Place the No.1 one–way clutch onto the rear planetary gear.

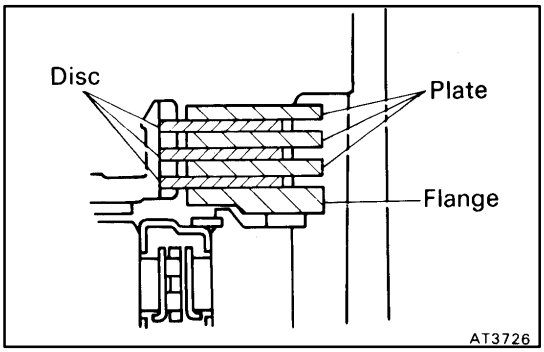

16. INSTALL SECOND BRAKE

(a) Install the flange, facing the flat end upward.

(b) Install the 3 discs and plates.
Install in order:
P=Plate D=Disc
D–P–D–P–D–P

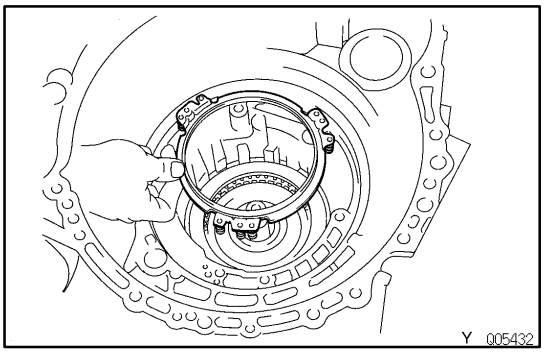

(c) Place the piston return spring into the case.

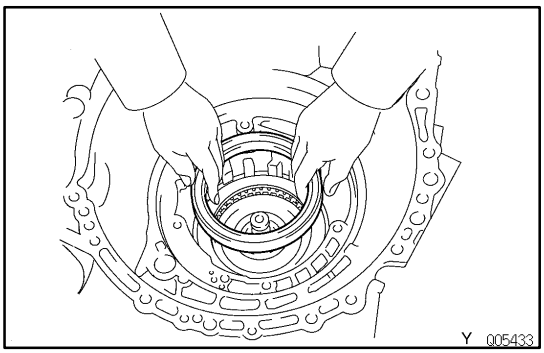

(d) Place the second brake drum into the case.
HINT: Align the groove of the drum with the bolt.

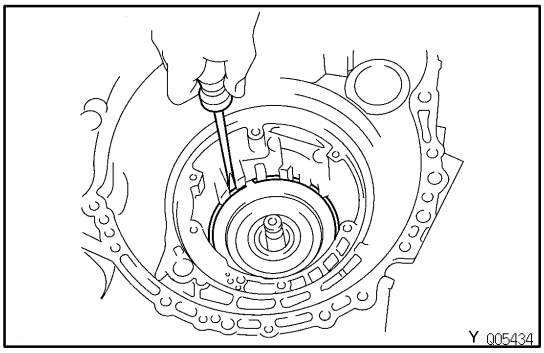

(e) Place the snap ring into the case so that end gap is installed into the groove.

(f) While compressing the piston return spring over the drum with screwdriver, install the snap ring into the groove.

(g) Be sure that the end gap of the snap ring is not aligned with one of cutouts.

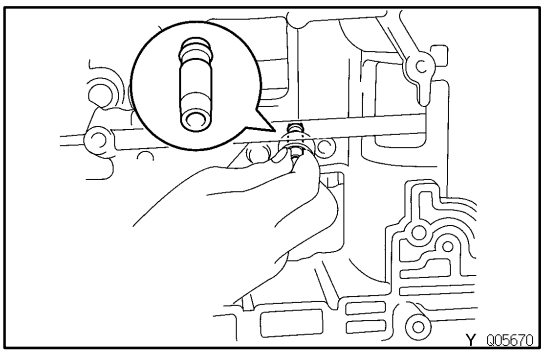

17. INSTALL NEW SECOND BRAKE GASKET

Install a new gasket until it makes contact with the second brake drum.

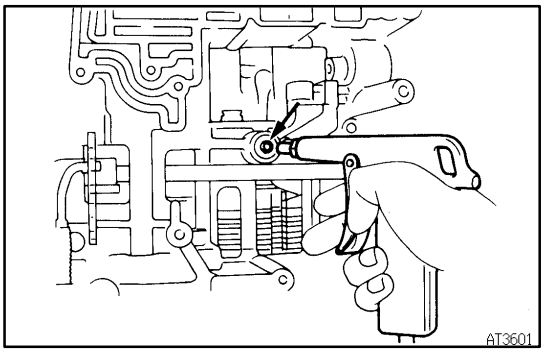

18. CHECK OPERATION OF SECOND BRAKE

Apply compressed air into the second brake gasket and confirm that the piston moves.

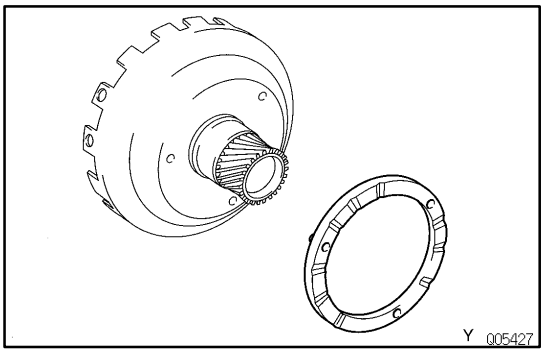

19. INSTALL SUN GEAR AND SUN GEAR INPUT DRUM

(a) Coat the thrust washer with petroleum jelly and install it on the sun gear input drum.

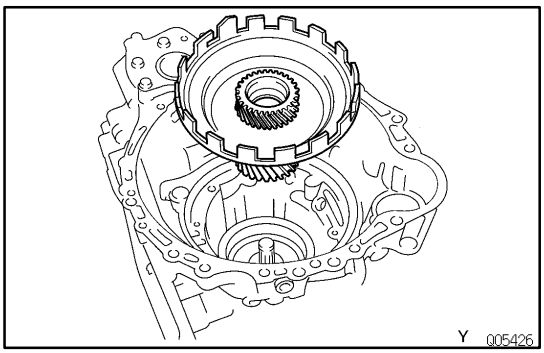

(b) While turning the sun gear clockwise, install it into the No.1 one–way clutch.

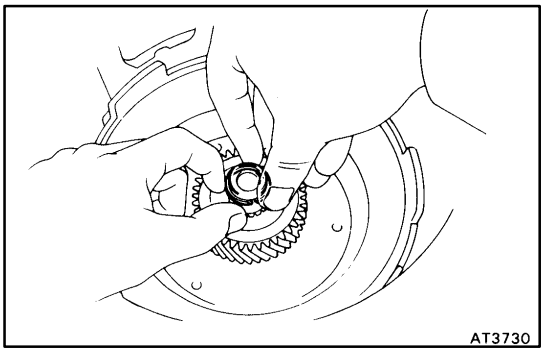

20. INSTALL OIL SEAL RING TO INTERMEDIATE SHAFT

HINT: After installing the oil seal ring, check that it moves smoothly.

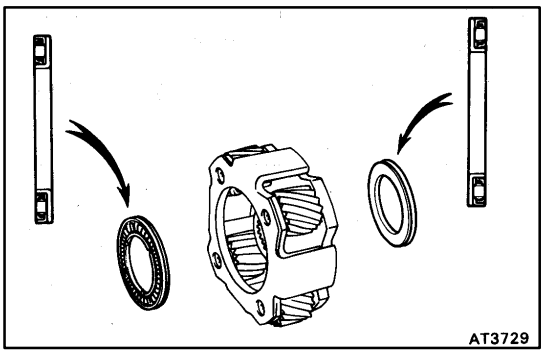

21. INSTALL FRONT PLANETARY GEAR

(a) Coat the bearings with petroleum jelly, and install them onto the both sides of planetary gear.
Bearing outer diameter: 45.5 mm (1.791 in.)
Bearing inner diameter: 30.1 mm (1.185 in.)

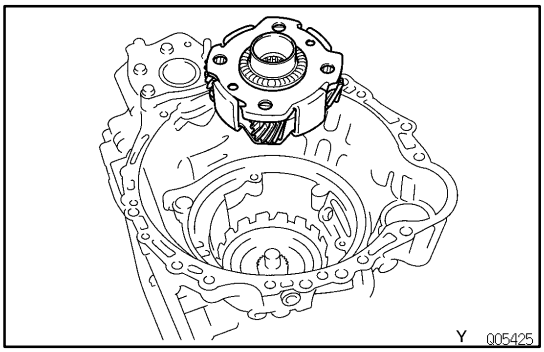

(b) Install the planetary gear onto the sun gear.

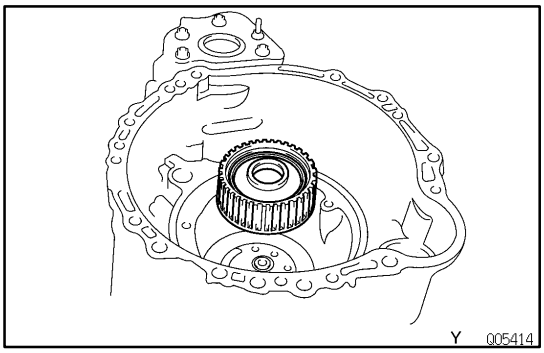

22. INSTALL FRONT PLANETARY RING GEAR

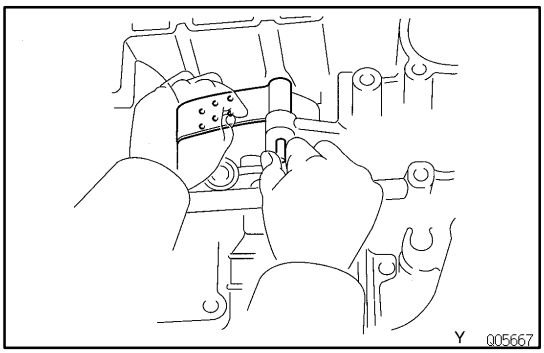

23. INSTALL SECOND COAST BRAKE BAND

(a) Place the band into the case.
(b) Install the pin through the oil pump mounting bolt hole.

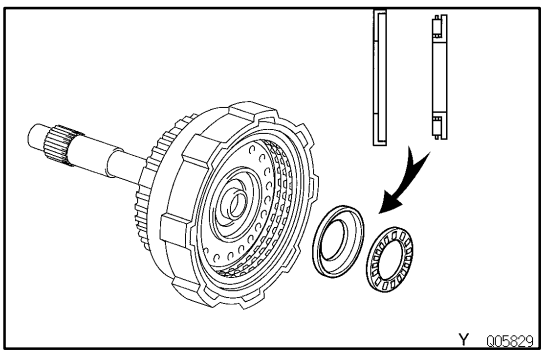

24. INSTALL FORWARD CLUTCH AND DIRECT CLUTCH

(a) Coat the bearing with petroleum jelly and install it onto rear side of the forward clutch.
Bearing outer diameter: 47.6 mm (1.874 in.)
Bearing inner diameter: 31.4 mm (1.236 in.)

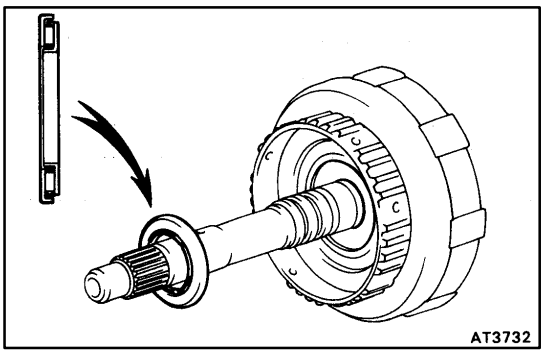

(b) Coat the bearing with petroleum jelly and install it onto the front side of the forward clutch.
HINT: There are 2 different thickness bearings for adjustment of the input shaft thrust play.
Bearing thickness
mm (in.)

Thickness	Outer diameter	Inner diameter
3.60 (0.1417)	45.9 (1.807)	27.7 (1.091)
4.19 (0.1650)	47.1 (1.854)	27.7 (1.091)

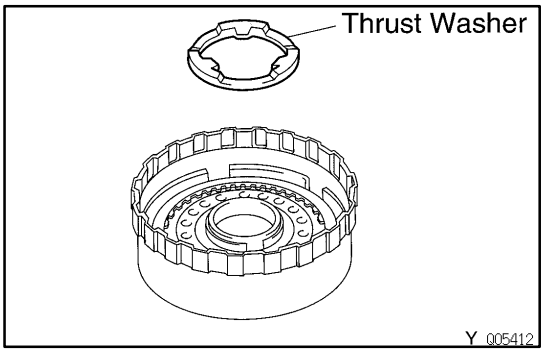

(c) Coat the thrust washer with petroleum jelly and install it with the oil groove facing upward onto the direct clutch drum.

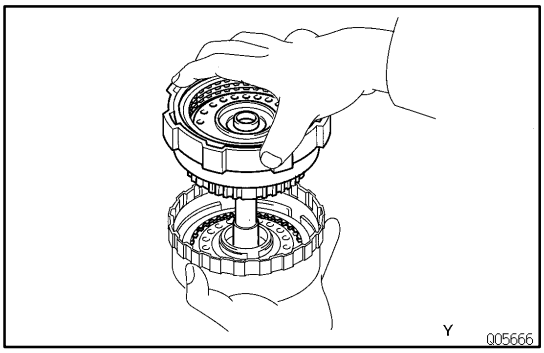

(d) Mesh the hub of the forward clutch flukes with the direct clutch discs.
HINT: Be careful that the bearing and thrust washer do not get out of place.

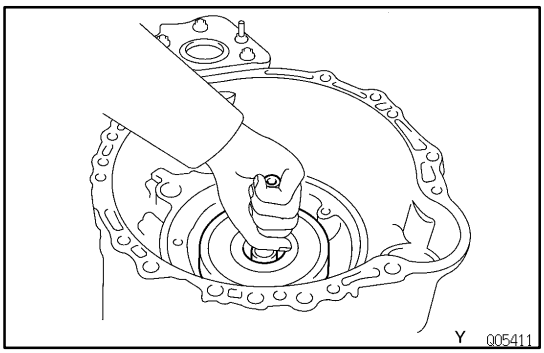

(e) Install the direct clutch and forward clutch into the case.
HINT: Hold the direct clutch toward the forward clutch to prevent the thrust washer from getting out of place.

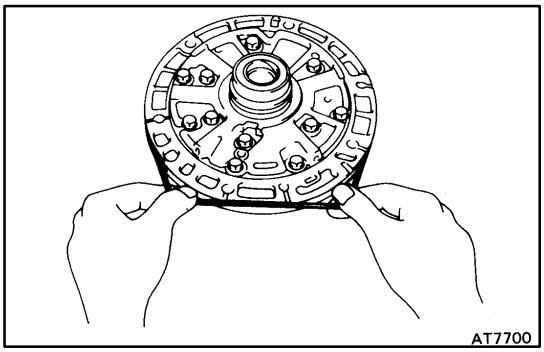

25. INSTALL OIL PUMP INTO CASE

(a) Coat a new O–ring with ATF and install it to the oil pump.

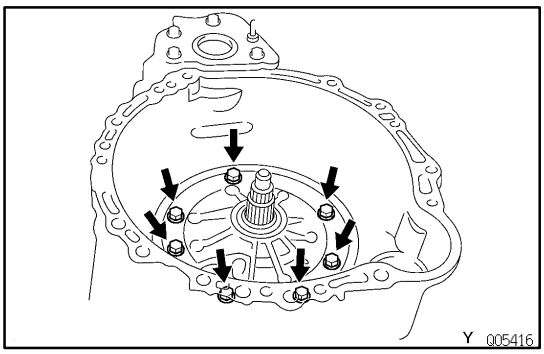

(b) Place the oil pump through the input shaft, and align the bolt holes of the pump body with the transmission case.
NOTICE: Do not push on the oil pump strongly or the oil seal ring will stick to the direct clutch drum.
Torque: 22 N·m (225 kgf·cm, 16 ft·lbf)

26. MEASURE END PLAY OF INPUT SHAFT

Measure the end play with a dial gauge.
End play:
0.25–0.90 mm (0.0098–0.0354 in.)
HINT: There are 2 different thickness bearings for end of stator shaft. If the end play is in excess of standard, select one of them.
Bearing thickness:
3.60 mm (0.1417 in.)
4.19 mm (0.1650 in.)

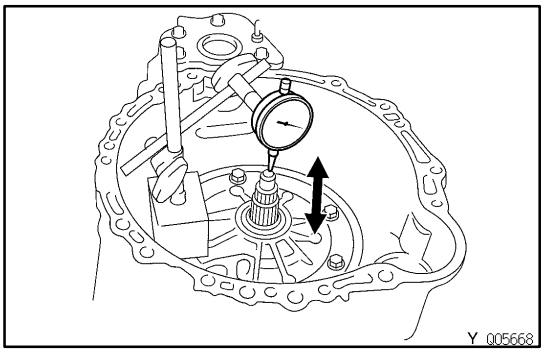

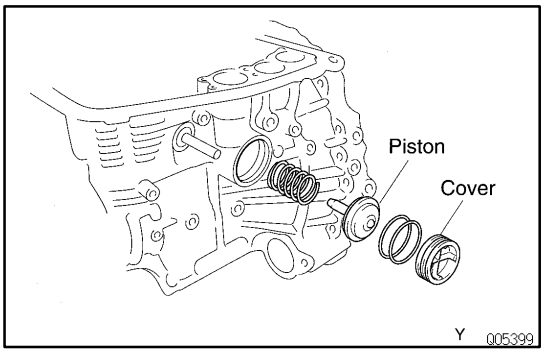

27. CHECK INPUT SHAFT ROTATION

Make sure that the input shaft rotates smoothly.

28. INSTALL SECOND COAST BRAKE PISTON

(a) Coat the new O–rings with ATF and install it to the cover.
(b) Install the outer spring with the piston.
(c) Place the cover into the bore.

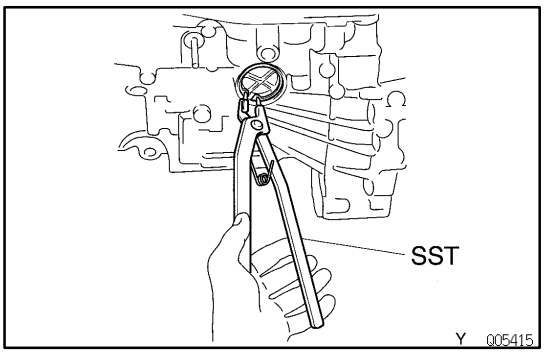

(d) Using SST, install the snap ring while pressing the cover.
SST 09350–32014 (09351–32050)
(e) Check that the front end of the piston rod contacts the center of the second brake band depression.

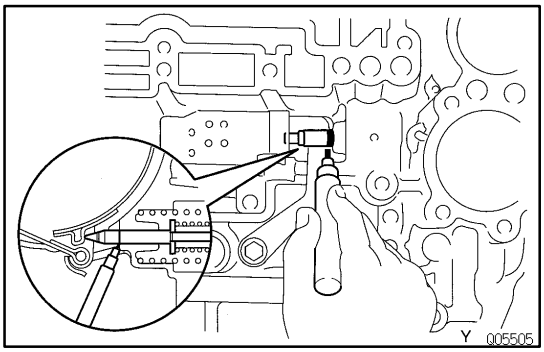

29. CHECK SECOND COAST BRAKE PISTON STROKE

(a) Apply a small amount of paint to the piston rod at the point it meets the case.

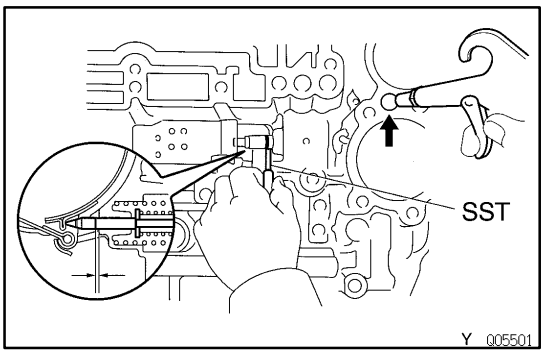

(b) Using SST, measure the piston stroke while applying and releasing compressed air (392–785 kPa, 4–8 kgf/cm^2, 57–114 psi).
SST 09240–00020
Piston stroke:
2.0–3.5 mm (0.079–0.138 in.)
If the stroke is more than specified, replace the piston rod with a longer one.
Piston rod length:
95.2 mm (3.748 in.)
96.3 mm (3.791 in.)
If the still more than standard value, replace the brake band with a new one.

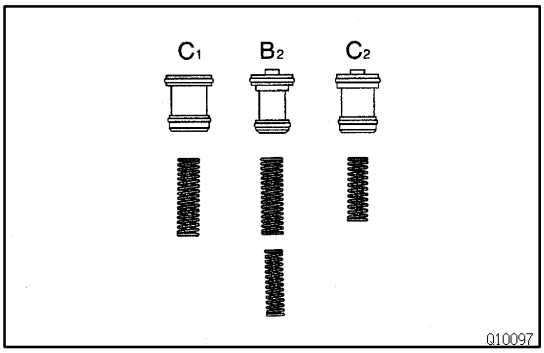

HYDRAULIC CONTROL UNIT INSTALLATION AX0U3–02

1. INSTALL ACCUMULATOR PISTONS AND SPRINGS

(a) Install the new O–rings to the pistons.
(b) Install the springs and pistons into the bores.
Spring dimensions
mm (in.)

Spring	Color	Free length
C_2	Yellow/Purple	51.8 (2.039)
B_2	None	88.2 (3.473)
B_2	None	70.3 (2.767)
C_1	None	73.6 (2.898)

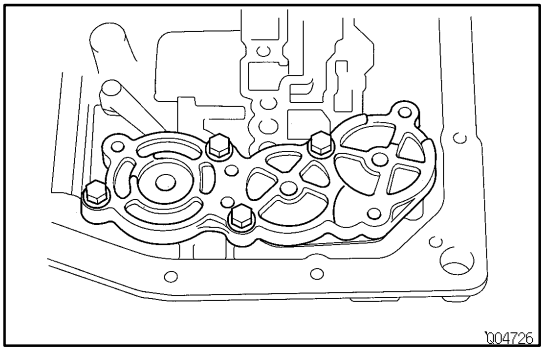

(c) Place the cover with a new gasket and gradually tighten the bolts a little at a time in sequence.
Torque: 10 N·m (100 kgf·cm, 7 ft·lbf)

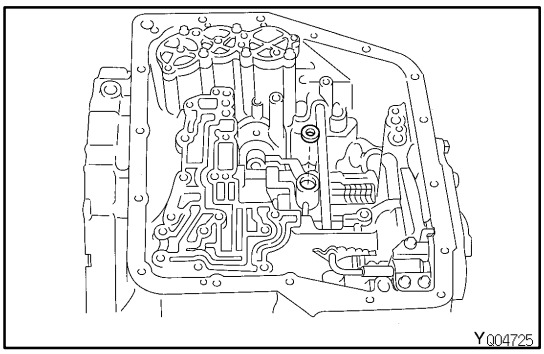

2. PLACE NEW SECOND BRAKE APPLY GASKET

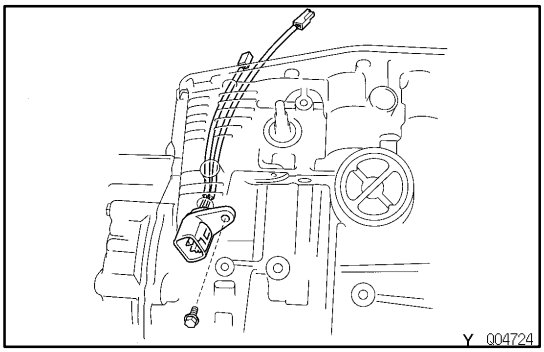

3. INSTALL SOLENOID WIRE

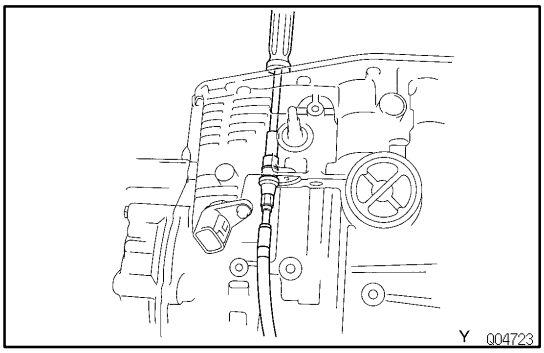

4. INSTALL THROTTLE CABLE

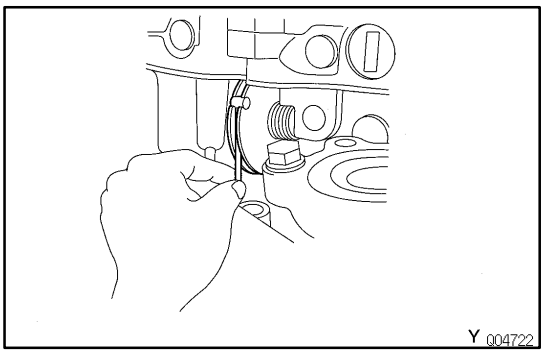

5. INSTALL VALVE BODY TO TRANSAXLE CASE

(a) While holding the cam down with your hand, slip the cable end into the slot.

(b) Lower the valve body into place.

NOTICE: Do not entangle the solenoid wire.

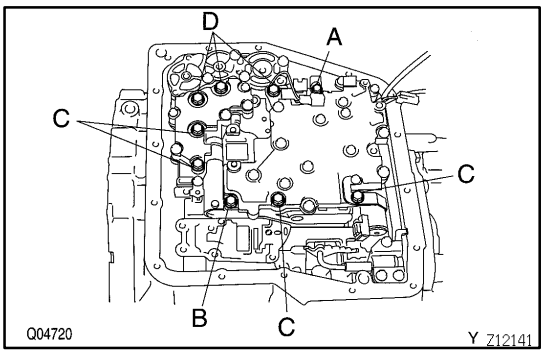

(c) Install and tighten the 9 bolts.
HINT:
- Each bolt length is indicated below.
- Hand tighten the 9 bolts first, then torque with a torque wrench.

Bolt length:
Bolt A: 30 mm (1.181 in.)
Bolt B: 43 mm (1.693 in.)
Bolt C: 48 mm (1.890 in.)
Bolt D: 52 mm (2.047 in.)
Torque: 11 N·m (110 kgf·cm, 8 ft·lbf)

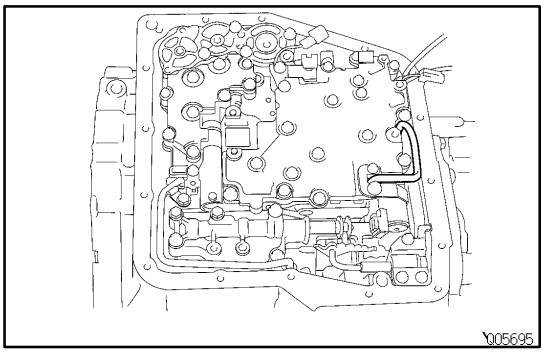

6. INSTALL B_3 APPLY PIPE
NOTICE: Be careful not to bend or damage the pipe.

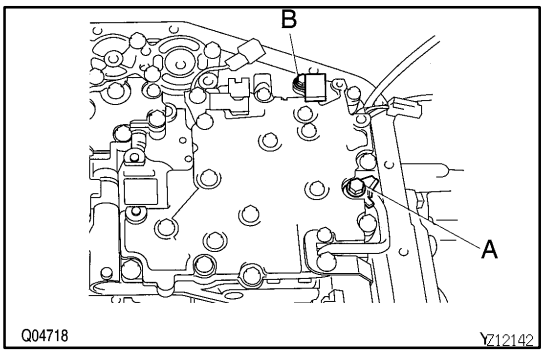

7. INSTALL CONNECTOR CLAMP AND PIPE RETAINER
HINT: Each bolt length is indicated below.
Bolt length:
Bolt A: 48 mm (1.890 in.)
Bolt B: 39 mm (1.535 in.)
Torque: 11 N·m (110 kgf·cm, 8 ft·lbf)

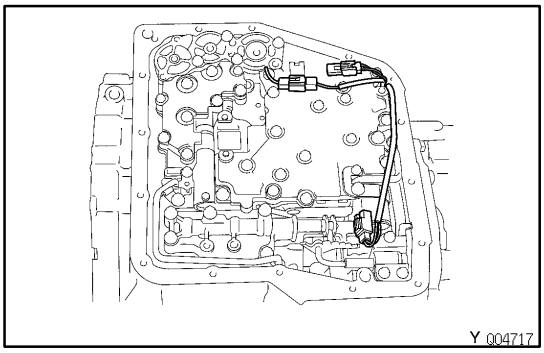

8. CONNECT SOLENOID CONNECTORS

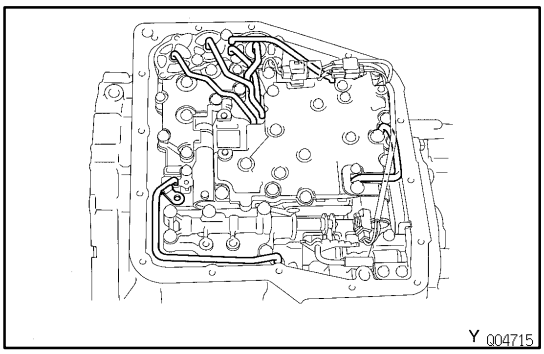

9. INSTALL OIL PIPES

Using a plastic hammer, install the pipes into the positions.

NOTICE: Be careful not to bend or damage the pipes.

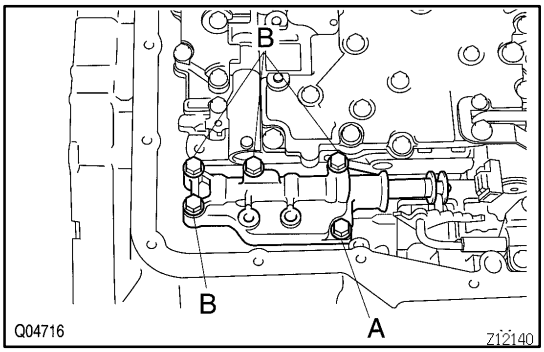

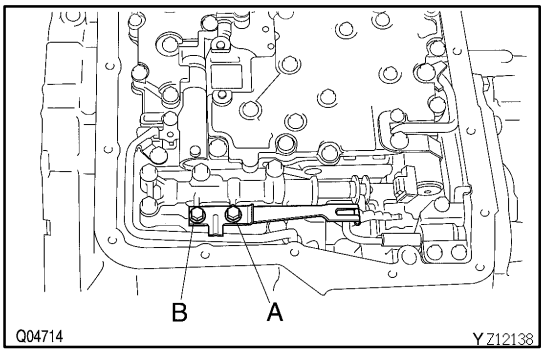

10. INSTALL MANUAL VALVE BODY AND DETENT SPRING

HINT: Each bolt length is indicated below.

Bolt length:

Bolt A: 22 mm (0.866 in.)

Bolt B: 37 mm (1.457 in.)

(a) Align the manual valve with the pin on the manual shaft lever.

(b) Lower the manual valve body into place.

(c) Hand tighten the 5 bolts first. Then, tighten them with a torque wrench.

Torque: 11 N·m (110 kgf·cm, 8 ft·lbf)

(d) Place the detent springs on the manual valve body and hand tighten the 2 bolts first.

Then, tighten them with a torque wrench.

Torque: 11 N·m (110 kgf·cm, 8 ft·lbf)

HINT: Each bolt length is indicated below.

Bolt length:

Bolt A: 14 mm (0.551 in.)

Bolt B: 37 mm (1.457 in.)

(e) Check that the manual valve lever is touching the center of the detent spring tip roller.

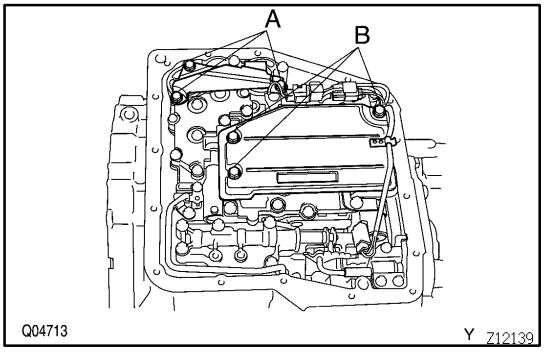

11. INSTALL PIPE BRACKET AND OIL STRAINER

Each bolt length is indicated below.

Bolt length:

Bolt A: 22 mm (0.866 in.)

Bolt B: 53 mm (2.087 in.)

Torque:

Pipe bracket: 10 N·m (100 kgf·cm, 7 ft·lbf)

Oil strainer: 11 N·m (110 kgf·cm, 8 ft·lbf)

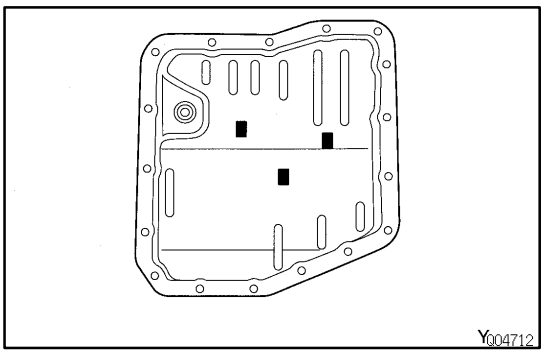

12. INSTALL MAGNETS IN PLACE

NOTICE: Make sure that the magnets do not interfere with the oil pipes.

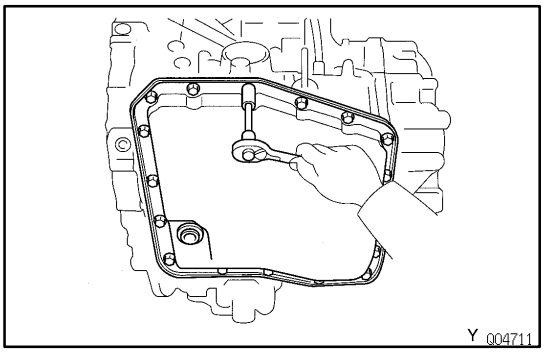

13. INSTALL OIL PAN WITH NEW GASKET

(a) Install a new gasket and oil pan.

(b) Install and torque the 17 bolts.

Torque: 4.9 N·m (50 kgf·cm, 43 in.·lbf)

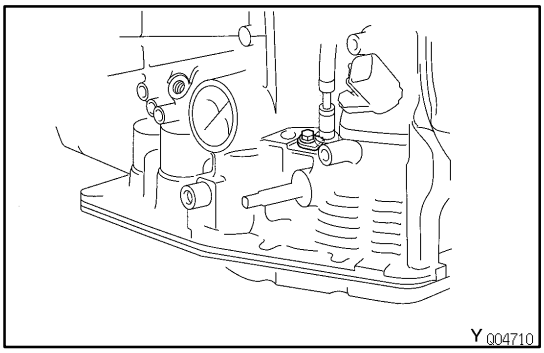

14. INSTALL THROTTLE CABLE RETAINING PLATE

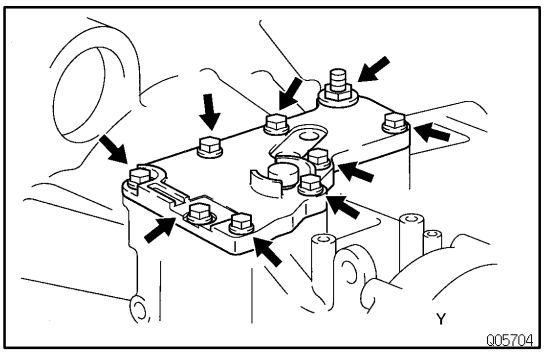

15. INSTALL TRANSAXLE UPPER COVER

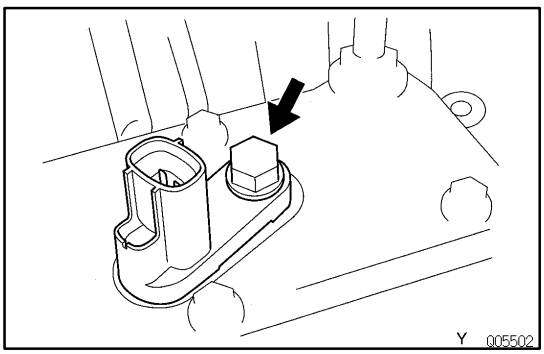

16. INSTALL T/M REVOLUTION SENSOR

(a) Install a new O–ring to the T/M revolution sensor.

(b) Install the T/M revolution sensor with the bolt.

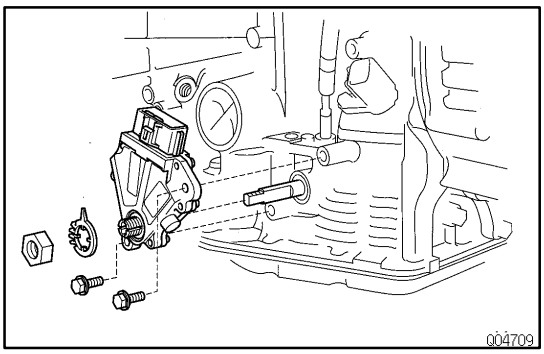

17. INSTALL PARK/NEUTRAL POSITION SWITCH

(a) Install the park/neutral position switch to the manual valve shaft.
(b) Place the new locking plate and tighten the nut.
(c) Stake the nut with locking plate.
(d) Install the 2 bolts.

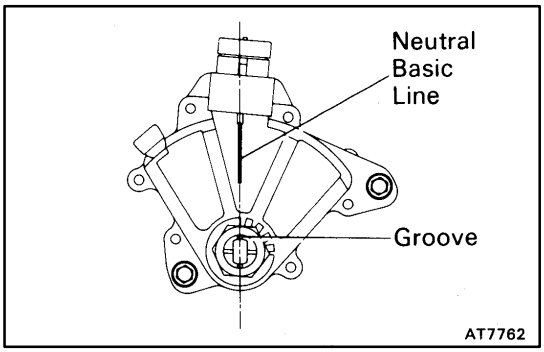

(e) Adjust the park/neutral position switch.
HINT: Align the groove and neutral basic line.
(f) Tighten the 2 bolts.

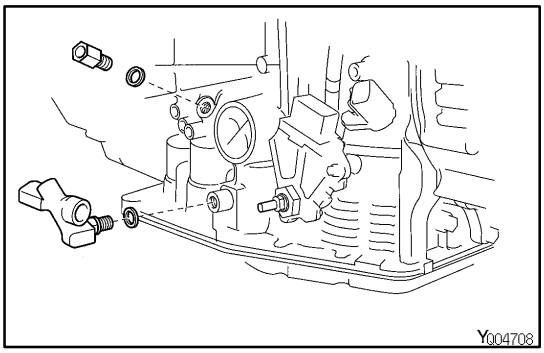

18. INSTALL UNION AND ELBOW

(a) Install the new O–rings to the union and elbow.
(b) Install the union elbow to the transaxle case.
Torque: 27 N·m (275 kgf·cm, 20 ft·lbf)

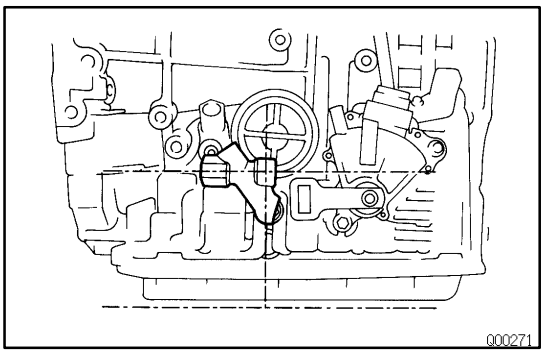

HINT: Install the elbow, as shown in the illustration.

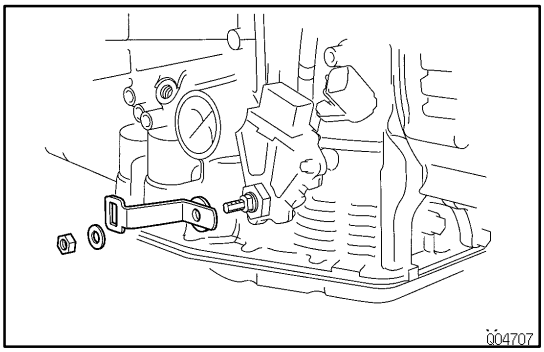

19. INSTALL MANUAL SHAFT LEVER

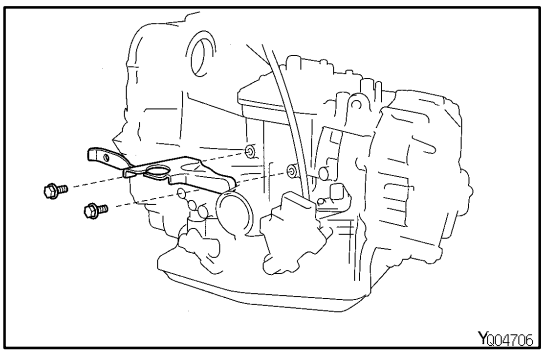

20. INSTALL SHIFT CONTROL CABLE BRACKET

SERVICE SPECIFICATIONS

SERVICE DATE

AX0H1–06

Second Coast Brake

Piston stroke	2.0 – 3.5 mm 0.079 – 0.138 in.
Piston rod length	95.2 mm 3.748 in.
	96.3 mm 3.791 in.

Oil Pump

Body clearance	STD	0.07 – 0.15 mm 0.0028 – 0.0059 in.
	Maximum	0.30 mm 0.0118 in.
Tip clearance	STD	0.11 – 0.14 mm 0.0043 – 0.0055 in.
	Maximum	0.30 mm 0.0118 in.
Side clearance	STD	0.02 – 0.05 mm 0.0008 – 0.0020 in.
	Maximum	0.10 mm 0.0039 in.
Pump body bushing inside diameter	Maximum	38.18 mm 1.5031 in.
Stator shaft bushing inside diameter		
Front side	Maximum	21.57 mm 0.8492 in.
Rear side	Maximum	27.07 mm 1.0657 in.

Direct Clutch

Piston stroke	0.91 – 1.35 mm 0.0358 – 0.0531 in.
Drum bushing inside diameter	48.27 mm 1.9004 in.
Flange thickness	2.70 mm 0.1063 in. 3.00 mm 0.1181 in.

Forward Clutch

Piston stroke	1.79 – 2.21 mm 0.0704 – 0.0870 in.
Flange thickness	2.30 mm 0.0906 in. 2.70 mm 0.1063 in.

Front Planetary Gear

Sun gear bushing inside diameter	Maximum	22.59 mm 0.8894 in.
Ring gear flange bushing inside diameter	Maximum	30.08 mm 1.1842 in.
Planetary pinion gear thrust clearance	Maximum	0.61 mm 0.024 in.

Rear Planetary Gear

Planetary pinion gear thrust clearance	Maximum	0.61 mm 0.024 in.

First and Reverse Brake

Pack clearance		1.92 – 2.68 mm 0.0756 – 0.1055 in.

Overdrive Unit

Piston stroke		1.75 – 2.49 mm 0.0689 – 0.0980 in.
Direct clutch bushing inside diameter	Maximum	22.13 mm 0.8713 in.
Planetary pinion gear thrust clearance	STD	0.16 – 0.56 mm 0.0063 – 0.0220 in.
	Maximum	0.61 mm 0.024 in.

Valve Body Spring

Spring	Free length / Coil outer diameter mm (in.)	Total No. of coils / Color
Upper valve body		
Low coast modulator valve	20.2 (0.795) / 7.9 (0.311)	11.9 / Purple
B_1 orifice control valve	24.8 (0.976) / 6.4 (0.252)	12.0 / White
Down–shift plug	15.0 (0.591) / 11.0 (0.433)	7.0 / None
Throttle valve	31.5 (1.240) / 7.0 (0.276)	11.4 / Green
Lock–up relay valve	26.8 (1.055) / 10.2 (0.402)	10.8 / Yellow
Lower valve body		
2–3 shift valve	28.0 (1.102) / 9.4 (0.370)	10.3 / None
Second coast modulator valve	20.2 (0.795) / 7.9 (0.311)	11.9 / Purple
Accumulator control vavle	25.1 (0.988) / 8.6 (0.339)	8.0 / Red
Secondary regulator valve	46.9 (1.846) / 5.9 (0.232)	21.8 / None
Second lock valve	20.7 (0.815) / 7.4 (0.291)	9.5 / None
Reverse control valve	38.1 (1.500) / 6.5 (0.256)	19.0 / White/Purple
1–2 shift valve	29.2 (1.150) / 8.9 (0.350)	12.0 / Light Green
3–4 shift valve	28.0 (1.102) / 7.6 (0.299)	10.3 / None
Primary regulator valve	36.6 (1.441) / 16.1 (0.634)	6.3 / None
Cut–back valve	21.8 (0.858) / 6.0 (0.236)	13.5 / None
Solenoid modulator valve	30.2 (1.189) / 5.6 (0.220)	15.3 / Purple/Pink

Valve Body Key

Key	Height mm (in.)	Width mm (in.)	Thickness mm (in.)
Upper valve body			
B_1 orifice control valve	8.9 (0.350)	5.0 (0.197)	3.2 (0.126)
Low coast modulator valve	8.5 (0.335)	5.0 (0.197)	3.2 (0.126)
Lower valve body			
Accumulator control valve	8.5 (0.335)	5.0 (0.197)	3.2 (0.126)
Secondary regulator valve	11.0 (0.433)	5.0 (0.197)	3.2 (0.126)
1–2 shift valve	8.5 (0.335)	5.0 (0.197)	3.2 (0.126)
2–3 shift valve	8.5 (0.335)	5.0 (0.197)	3.2 (0.126)
3–4 shift valve	6.5 (0.256)	5.0 (0.197)	3.2 (0.126)
Second lock valve	9.2 (0.362)	5.0 (0.197)	3.2 (0.126)
Second coast modulator valve	8.0 (0.315)	5.0 (0.197)	3.2 (0.126)
Reverse control valve	8.5 (0.335)	5.0 (0.197)	3.2 (0.126)
Cut–back valve	9.2 (0.362)	5.0 (0.197)	3.2 (0.126)
Solenoid modulator valve	8.5 (0.335)	5.0 (0.197)	3.2 (0.126)
Lock–up control valve	9.2 (0.315)	5.0 (0.197)	3.2 (0.126)

Accumulator Spring

Spring		Free length mm (in.)	Color
C_0	Inner	47.5 (1.870)	White
	Outer	16.3 (0.642)	None
C_1		73.6 (2.898)	None
C_2		51.8 (2.039)	Yellow / Purple
B_0		66.8 (2.630)	Red / Yellow
B_2	Inner	70.3 (2.767)	None
	Outer	88.2 (3.473)	None

Differential Assembly

Drive pinion preload (at Starting)	
New bearing	1.0 – 1.6 N·m 10 – 16 kgf·cm 8.7 – 13.9 in.·lbf
Reused bearing	0.5 – 0.8 N·m 5 – 8 kgf·cm 4.3 – 6.9 in.·lbf
Total preload (at starting)	
New bearing	Drive pinion preload plus 0.3 – 0.4 N·m 2.8 – 4.4 kgf·cm 2.4 – 3.8 in.·lbf
Reused bearing	Drive pinion preload plus 0.1 – 0.2 N·m 1.4 – 2.2 kgf·cm 1.2 – 1.9 in.·lbf
Pinion to side gear backlash	0.05 – 0.20 mm 0.0020 – 0.0079 in.
Side gear thrust washer thickness	1.60 mm 0.0630 in. 1.70 mm 0.0670 in. 1.80 mm 0.0709 in.

Side bearing adjusting shim thickness	Mark	2.00 mm 0.0787 in.
	0	2.05 mm 0.0807 in.
	1	2.10 mm 0.0827 in.
	2	2.15 mm 0.0846 in.
	3	2.20 mm 0.0866 in.
	4	2.25 mm 0.0886 in.
	5	2.30 mm 0.0906 in.
	6	2.35 mm 0.0925 in.
	7	2.40 mm 0.0945 in.
	8	2.45 mm 0.0965 in.
	9	2.50 mm 0.0984 in.
	A	2.55 mm 0.1004 in.
	B	2.60 mm 0.1024 in.
	C	2.65 mm 0.1043 in.
	D	2.70 mm 0.1063 in.
	E	2.75 mm 0.1083 in.
	F	2.80 mm 0.1102 in.
	G	2.85 mm 0.1122 in.
	H	

AX04N–03

TORQUE SPECIFICATIONS

Part tightened	N·m	kgf·cm	ft·lbf
Oil cooler pipe union	27	275	20
Oil pan	4.9	50	43 in.·lbf
Valve body x Transaxle case	11	110	8
Accumulator x Cover	10	100	7
Oil pump x Transaxle case	22	225	16
O/D case x Transaxle case	25	250	18
Differential LH side bearing retainer	19	195	14
Differential RH retainer	19	195	14
Differential carrier cover	39	400	29
Oil pump body x Stator shaft	10	100	7
Ring gear x Differential case	124	1,260	91
Upper valve body x Lower valve body	6.6	67	58 in.·lbf
Accumulator cylinder x Valve body	6.6	67	58 in.·lbf
Solenoid x Valve body	6.6	67	58 in.·lbf
Counter drive gear lock nut	280	2,855	206
Carrire cover x Transaxle case	39	400	29
Parking lock pawl bracket	7.4	75	65 in.·lbf
Oil strainer x Transaxle case	11	110	8

AUTOMATIC TRANSAXLE SYSTEM

AX03L–01

PRECAUTION

If the vehicle is equipped with a mobile communication system, refer to the precautions in the IN section.

AX03M–01

OPERATION

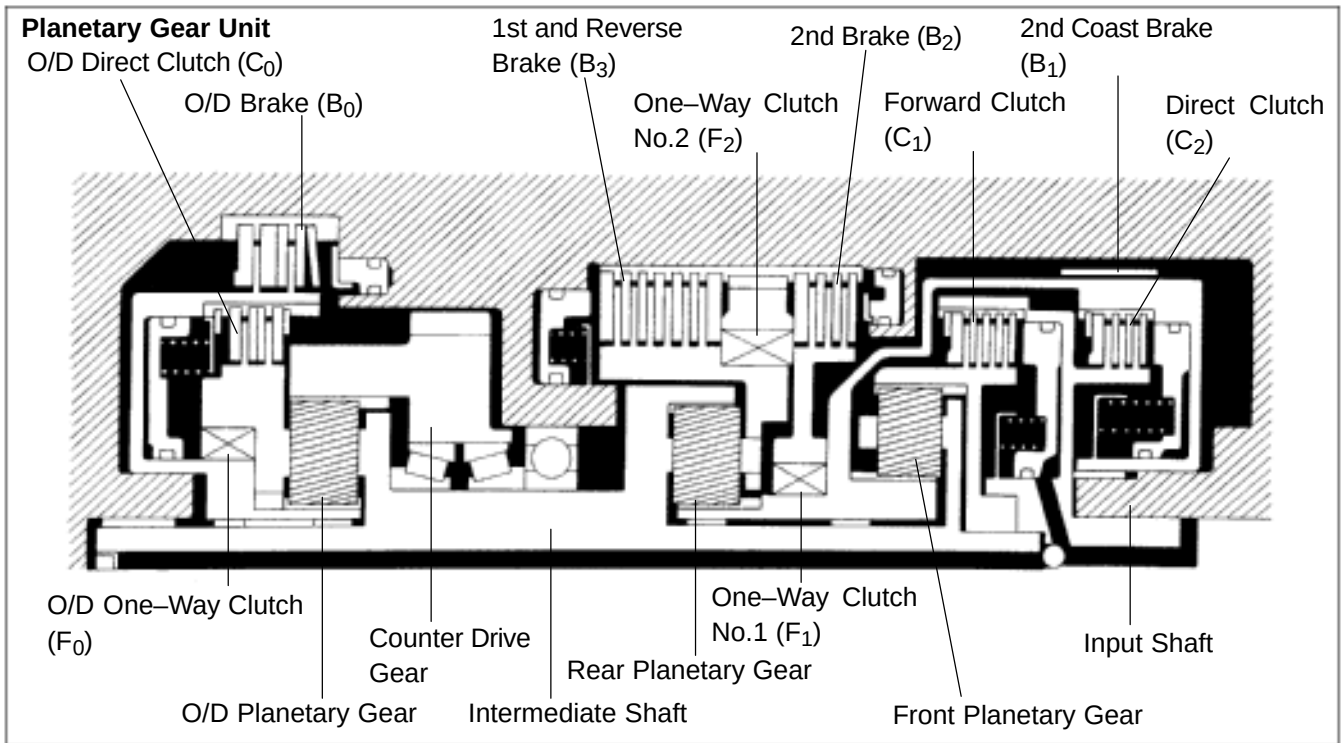

Shift Lever Position	Gear Position	C_0	C_1	C_2	B_0	B_1	B_2	B_3	F_0	F_1	F_2
P	Parking	◯									
R	Reverse	◯		◯				◯			
N	Neutral	◯									
D	1st	◯	◯						◯		◯
	2nd	◯	◯				◯		◯	◯	
	3rd	◯	◯	◯			◯		◯		
	O/D		◯	◯	◯		◯				
2	1st	◯	◯						◯		◯
	2nd	◯	◯			◯	◯		◯	◯	
	*3rd	◯	◯	◯			◯		◯		
L	1st	◯	◯					◯	◯		◯
	*2nd	◯	◯			◯	◯		◯	◯	

*Down–shift only – no up–shift

◯ : Operating

D01018

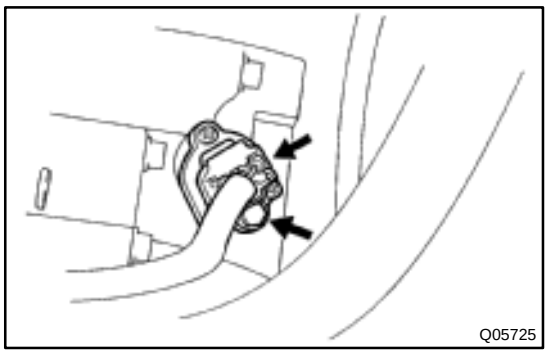
Q05725

VEHICLE SPEED SENSOR

AX03N–01

ON–VEHICLE REPAIR

1. REMOVE AIR CLEANER ASSEMBLY

2. DISCONNECT VEHICLE SPEED SENSOR CONNECTOR

3. REMOVE VEHICLE SPEED SENSOR ASSEMBLY

(a) Remove the bolt and vehicle speed sensor assembly.

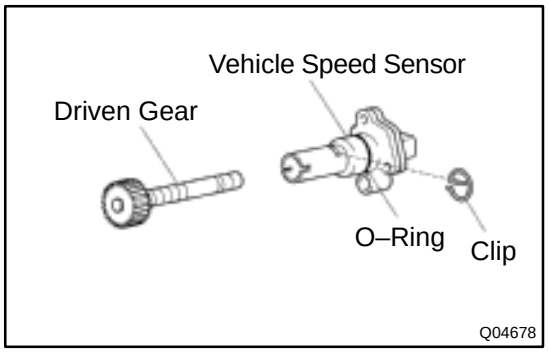

Q04678

(b) Remove the clip and driven gear from the vehicle speed sensor.

(c) Remove the O–ring from the vehicle speed sensor.

4. INSTALL VEHICLE SPEED SENSOR ASSEMBLY

(a) Coat a new O–ring with ATF and install it to the vehicle speed sensor.

(b) Install the driven gear to the vehicle speed sensor and clip.

(c) Install the vehicle speed sensor assembly with the bolt.
Torque: 4.9 N·m (50 kgf·cm, 43 in.·lbf)

5. CONNECT VEHICLE SPEED SENSOR CONNECTOR

6. INSTALL AIR CLEANER ASSEMBLY

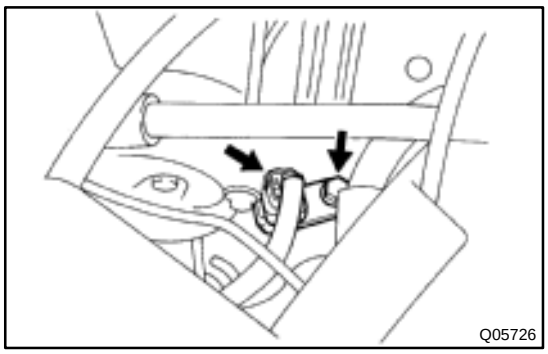
Q05726

DIRECT CLUTCH SPEED SENSOR

AX03O–01

ON–VEHICLE REPAIR

1. DISCONNECT DIRECT CLUTCH SPEED SENSOR CONNECTOR

2. REMOVE DIRECT CLUTCH SPEED SENSOR

(a) Remove the bolt and direct clutch speed sensor.

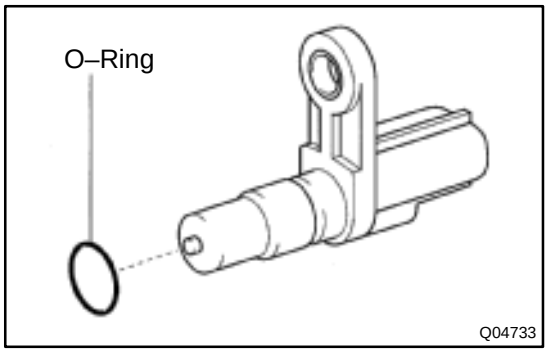

Q04733

(b) Remove the O–ring from direct clutch speed sensor.

3. INSTALL DIRECT CLUTCH SPEED SENSOR

(a) Coat a new O–ring with ATF and install it to the direct clutch speed sensor.

(b) Install the direct clutch speed sensor with the bolt.
Torque: 11 N·m (110 kgf·cm, 8 ft·lbf)

PARK/NEUTRAL POSITION (PNP) SWITCH

AX03P–01

ON–VEHICLE REPAIR

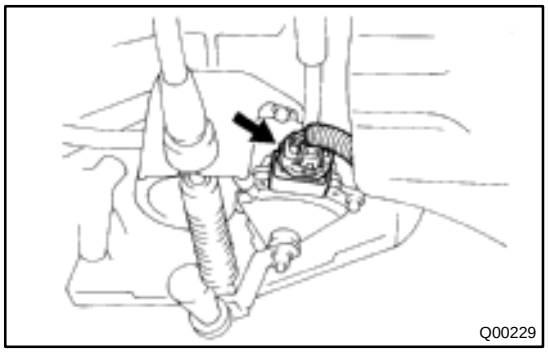

1. DISCONNECT PARK/NEUTRAL POSITION SWITCH CONNECTOR

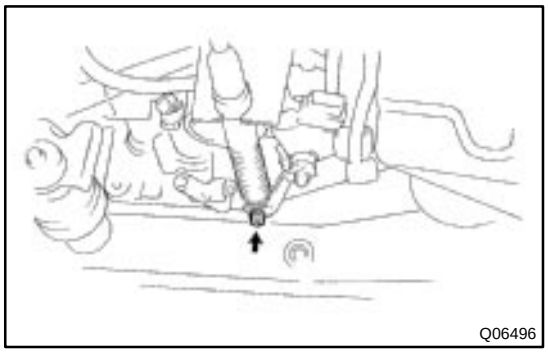

2. REMOVE PARK/NEUTRAL POSITION SWITCH

(a) Remove the clip from the shift control cable.
(b) Remove the nut and control cable.

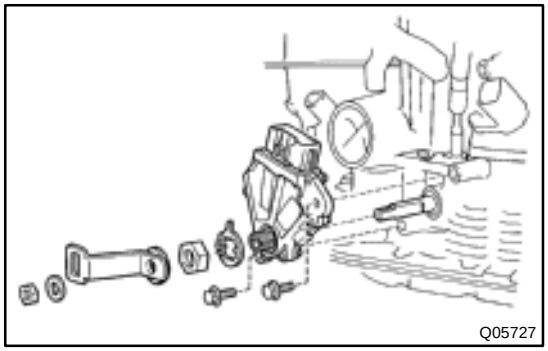

(c) Remove the nut, washer and transaxle control shaft lever.
(d) Using a screwdriver, pry off the lock plate.
(e) Remove the nut and lock plate.
(f) Remove the 2 bolts and pull out the park/neutral position switch.

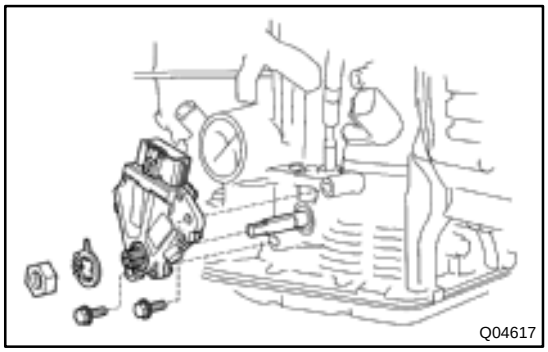

3. INSTALL AND ADJUST PARK/NEUTRAL POSITION SWITCH

(a) Temporarily install the park/neutral position switch with the 2 bolts.
(b) Install a new lock plate and nut.
Torque: 6.9 N·m (70 kgf·cm, 61 in.·lbf)
(c) Stake the nut with the lock plate.

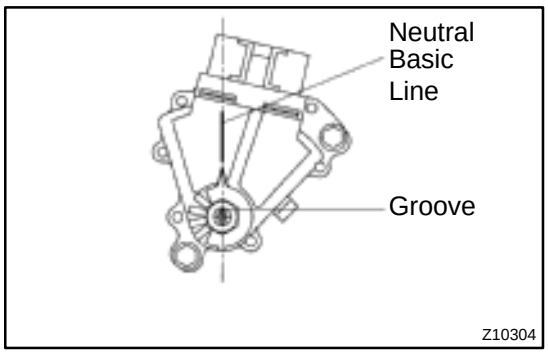

(d) Adjust the park/neutral position switch.
(See page DI–438)

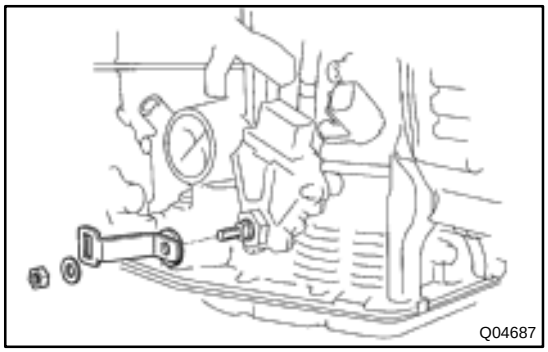

(e) Install the transaxle control shaft lever and washer.
(f) Install and torque the nut.
Torque: 15 N·m (150 kgf·cm, 11 ft·lbf)

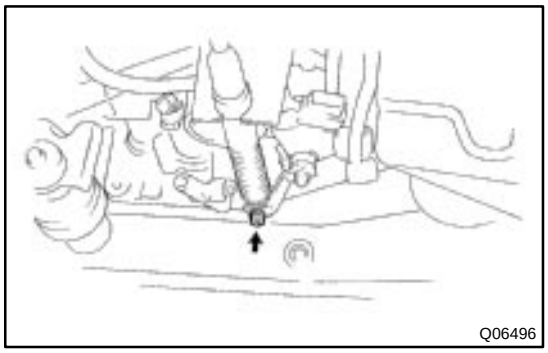

(g) Install the control cable and nut.
Torque: 15 N·m (150 kgf·cm, 11 ft·lbf)
(h) Install the clip to the shift control cable.

4. CONNECT PARK/NEUTRAL POSITION SWITCH CONNECTOR

5. TEST DRIVE VEHICLE

VALVE BODY ASSEMBLY
AX03Q–02
ON–VEHICLE REPAIR

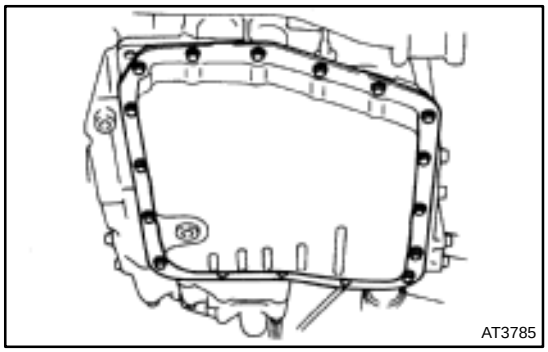

1. DRAIN ATF

Using a hexagon wrench, remove the drain plug and fluid into the suitable container.

2. REMOVE OIL PAN AND GASKET

NOTICE:

Some fluid will remain in the oil pan.

Remove oil pan bolts, and carefully remove the pan assembly. Discard the gasket.

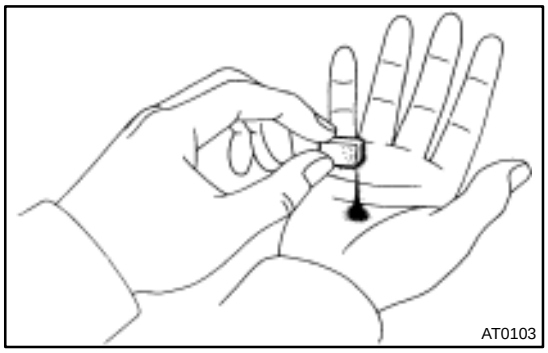

3. EXAMINE PARTICLES IN PAN

Remove the magnets and use them to collect any steel chips. Look at the chips and particles in the pan and magnet carefully to anticipate what type of wear you will find in the transaxle.

- Steel (magnetic): bearing, gear and plate wear
- Brass (non–magnetic): bushing wear

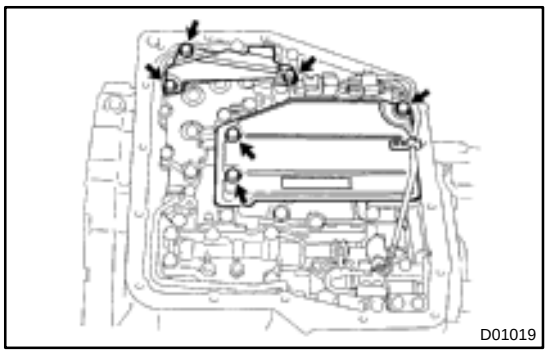

4. REMOVE OIL STRAINER AND APPLY PIPE BRACKET

(a) Remove the 3 bolts and oil strainer.

NOTICE:

Be careful as oil will come out of the strainer when it is removed.

(b) Remove the 3 bolts and apply pipe bracket.

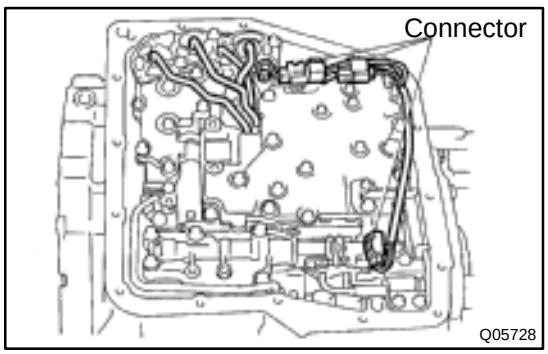

5. REMOVE OIL PIPES

Pry up both pipe ends with a large screwdriver and remove the 5 pipes.

6. DISCONNECT SOLENOID CONNECTORS

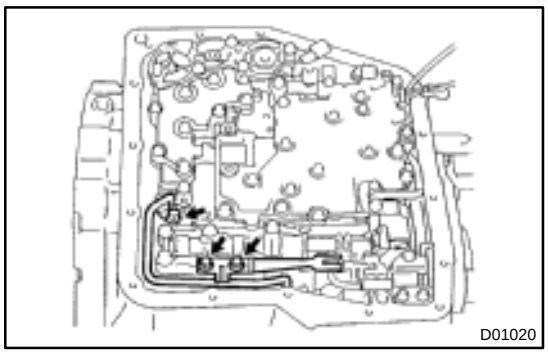

7. REMOVE DETENT SPRING AND OIL PIPE

(a) Remove the 2 bolts and detent spring.
(b) Remove the bolt.
(c) Pry up the pipe with a screwdriver and remove the pipe.

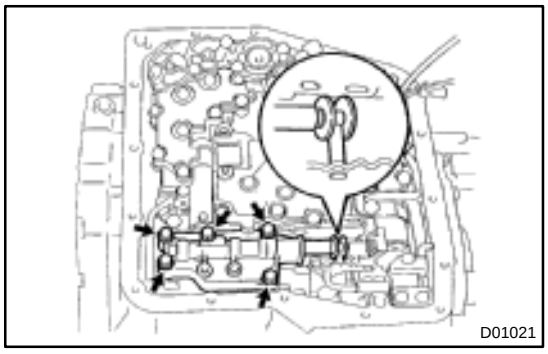

8. REMOVE MANUAL VALVE BODY

Remove the 5 bolts and manual valve body.

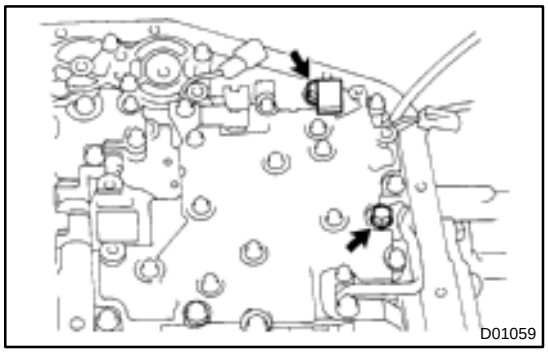

9. REMOVE CONNECTOR CLAMP AND PIPE RETAINER

Remove the 2 bolts, connector clamp and pipe retainer.

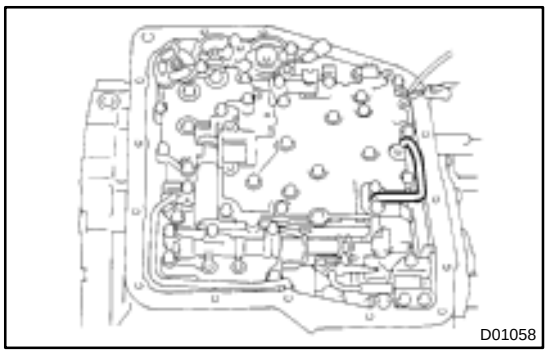

10. REMOVE B_3 APPLY PIPE

Pry up the pipe with a screwdriver and remove the pipe.



11. REMOVE VALVE BODY

(a) Remove the 9 bolts.

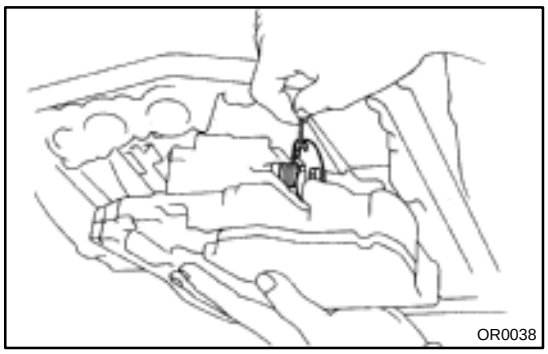

(b) Disconnect the throttle cable from the cam and remove the valve body.

12. REMOVE 2ND BRAKE APPLY GASKET

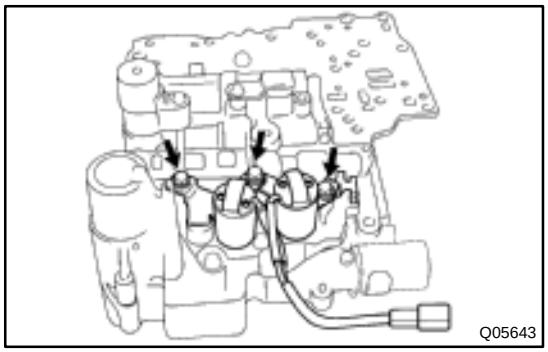

13. REMOVE SOLENOID VALVES

(a) Remove the 3 bolts, shift solenoid valve No.1 and No.2 with the retainer.

NOTICE:

When removing solenoid, do not use a screwdriver, etc. to pry up the solenoid.

(b) Remove the O–rings from the shift solenoid valve No.1 and No.2.

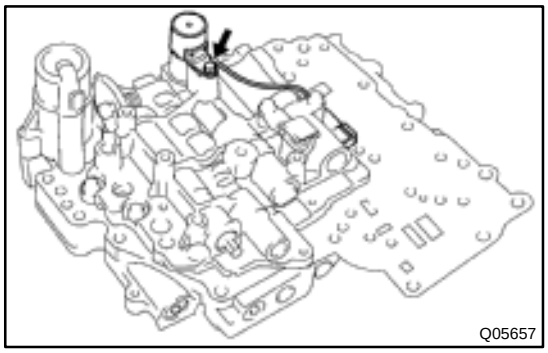

(c) Remove the bolt and shift solenoid valve SL.

(d) Remove the O–ring from the shift solenoid valve SL.

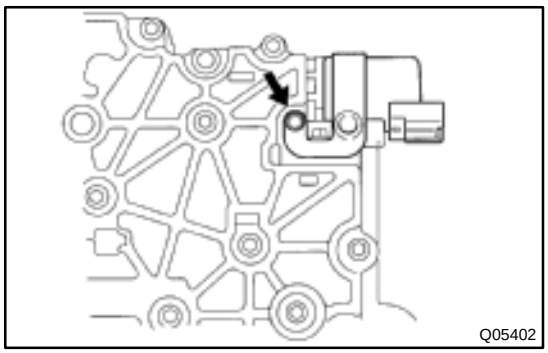

(e) Remove the bolt and shift solenoid valve SLN.

(f) Remove the O–ring from the shift solenoid valve SLN.

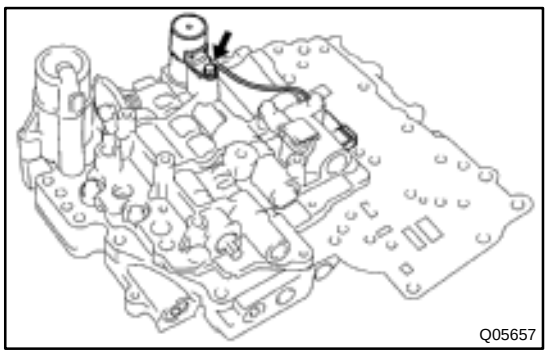

14. INSTALL SOLENOID VALVES

(a) Coat the 2 new O–rings with ATF and install it to the shift solenoid valve SL.

(b) Install the shift solenoid valve SL.

(c) Install and torque the bolt.

Torque: 6.6 N·m (67 kgf·cm, 58 in.·lbf)

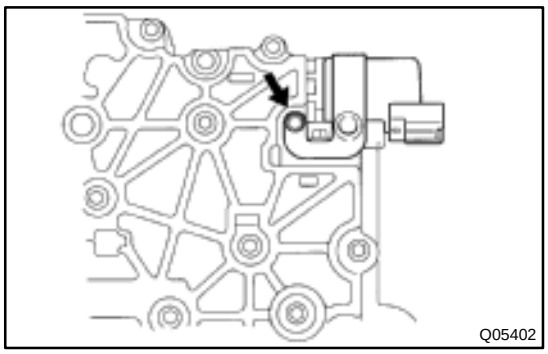

(d) Coat the 2 new O–rings with ATF and install it to the shift solenoid valve SLN.
(e) Install the shift solenoid valve SLN.
(f) Install and torque the bolt.
Torque: 6.6 N·m (67 kgf·cm, 58 in.·lbf)

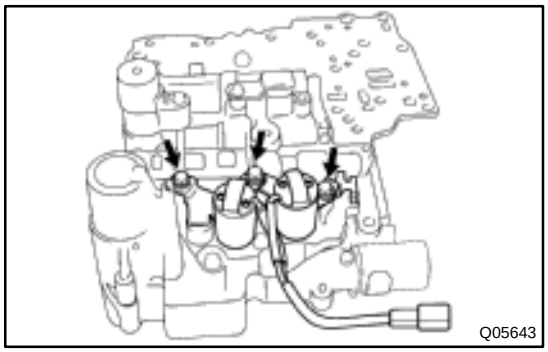

(g) Coat the 2 new O–rings with ATF and install it to the shift solenoid valve No.1 and No.2.
(h) Install the No.1 and No.2 solenoids.
(i) Install and torque the 3 bolts.
Torque: 6.6 N·m (67 kgf·cm, 58 in.·lbf)

15. PLACE NEW 2ND BRAKE APPLY GASKET

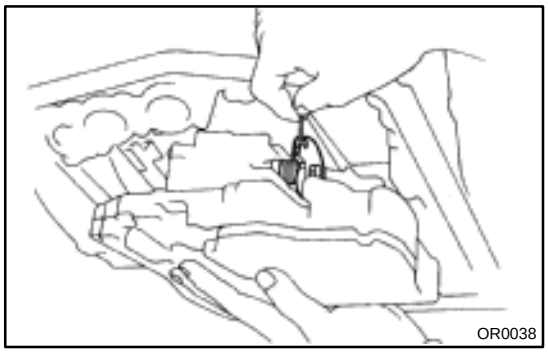

16. INSTALL VALVE BODY TO TRANSAXLE CASE
(a) While holding the cam down with your hand, slip the cable end into the slot.
(b) Lower the valve body into place.
NOTICE:
Be careful not to entangle the solenoid wire.

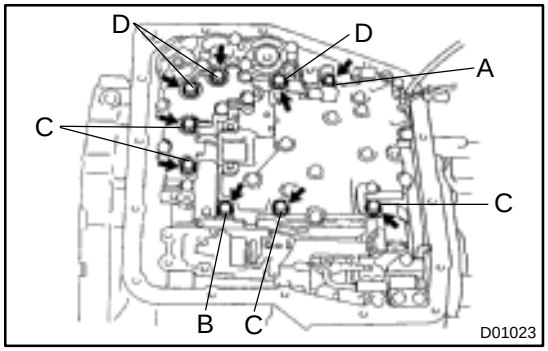

(c) Install and tighten the 9 bolts.
HINT:
Hand tighten the 9 bolts first, then torque with a torque wrench.
Bolt length:
Bolt A: 30 mm (1.181 in.)
Bolt B: 43 mm (1.693 in.)
Bolt C: 48 mm (1.890 in.)
Bolt D: 52 mm (2.047 in.)
Torque: 11 N·m (110 kgf·cm, 8 ft·lbf)

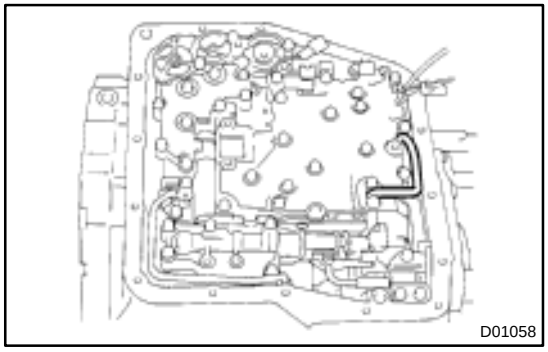

17. INSTALL B_3 APPLY PIPE
NOTICE:
Be careful not to bend or damage the pipe.

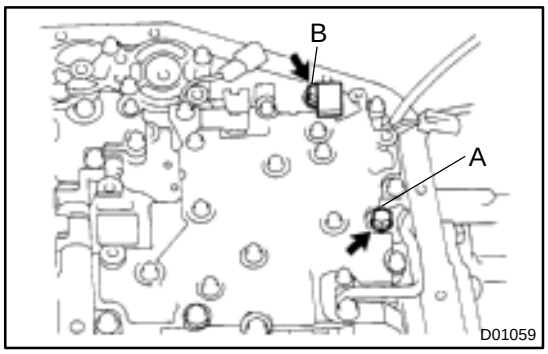

18. INSTALL CONNECTOR CLAMP AND PIPE RETAINER

(a) Install the connector clamp and pipe retainer.

(b) Install and torque the 2 bolts.

Bolt length:
Bolt A: 48 mm (1.890 in.)
Bolt B: 39 mm (1.535 in.)
Torque: 11 N·m (110 kgf·cm, 8 ft·lbf)

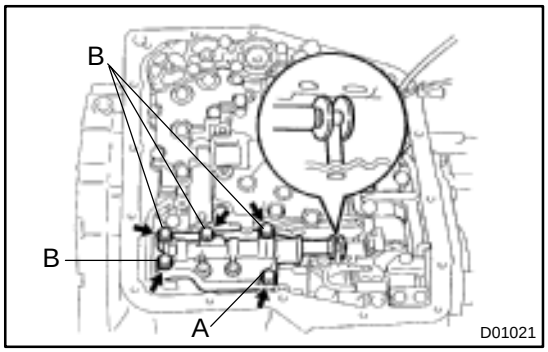

19. INSTALL MANUAL VALVE BODY

(a) Align the manual valve with the pin on the manual shaft lever.

(b) Lower the manual valve body into place.

(c) Hand tighten the 5 bolts first. Then, tighten them with a torque wrench.

Bolt length:
Bolt A: 22 mm (0.866 in.)
Bolt B: 37 mm (1.457 in.)
Torque: 11 N·m (110 kgf·cm, 8 ft·lbf)

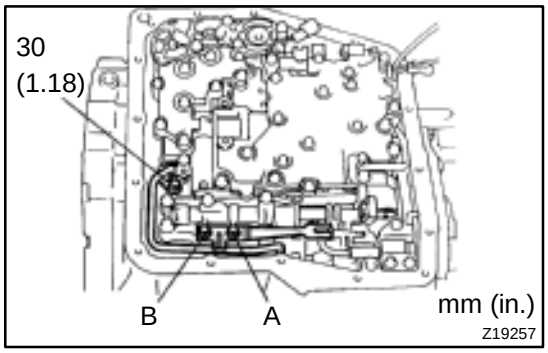

20. INSTALL DETENT SPRING AND OIL PIPE

(a) Place the detent springs on the manual valve body and hand tighten the 2 bolts first. Then, tighten them with a torque wrench.

Bolt length:
Bolt A: 14 mm (0.551 in.)
Bolt B: 37 mm (1.457 in.)
Torque: 11 N·m (110 kgf·cm, 8 ft·lbf)

(b) Check that the manual valve lever is touching the center of the detent spring tip roller.

(c) Using a plastic hammer, install the pipe into the position.

NOTICE:
Be careful not to bend or damage the pipe.

(d) Install and torque the bolt.

Torque: 10 N·m (100 kgf·cm, 7 ft·lbf)

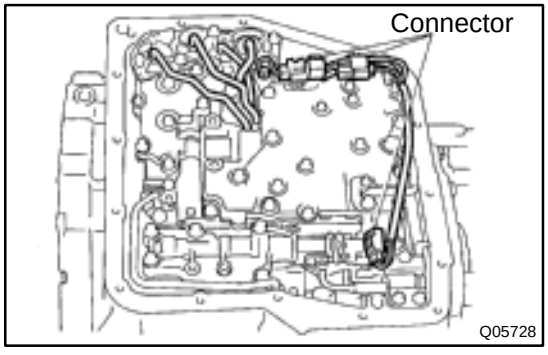

21. CONNECT SOLENOID CONNECTORS

22. INSTALL OIL PIPES

Using a plastic hammer, install the pipes into the positions.

NOTICE:
Be careful not to bend or damage the pipes.

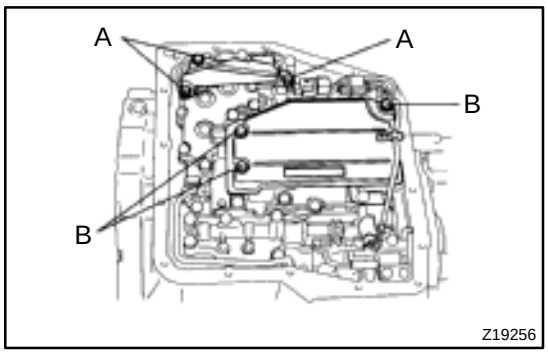

23. INSTALL OIL STRAINER AND APPLY PIPE BRACKET

(a) Install the oil strainer and apply pipe bracket.

(b) Install and torque the 6 bolts.

Bolt length:
Bolt A: 22 mm (0.866 in.)
Bolt B: 53 mm (2.087 in.)
Torque:
Bolt A: 10 N·m (100 kgf·cm, 7 ft·lbf)
Bolt B: 11 N·m (110 kgf·cm, 8 ft·lbf)

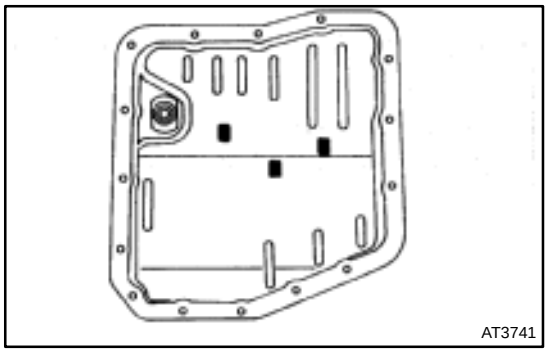

24. INSTALL MAGNETS IN PLACE

Install the 3 magnets in the indentations of the oil pan, as shown in the illustration.

NOTICE:

Make sure that the magnet does not interfere with the oil pipes.

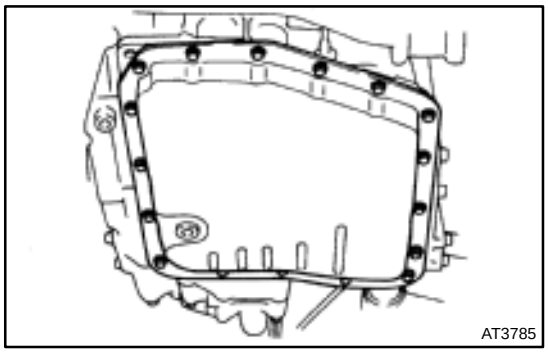

25. INSTALL OIL PAN AND GASKET

(a) Install the oil pan and a new gasket.

(b) Install and torque the 17 new bolts.

Torque: 7.8 N·m (80 kgf·cm, 69 in.·lbf)

26. INSTALL AND TORQUE DRAIN PLUG

Torque: 49 N·m (500 kgf·cm, 36 ft·lbf)

27. FILL ATF AND CHECK FLUID LEVEL

(See page DI–438)

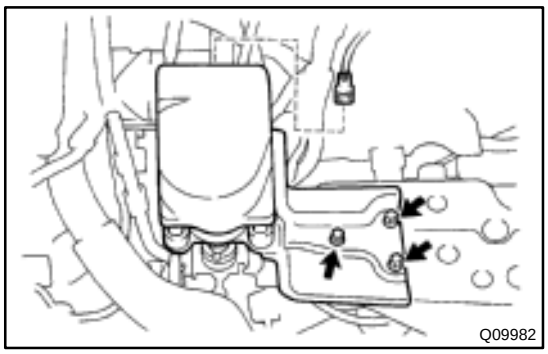
Q09982

THROTTLE CABLE

AX03R–01

ON–VEHICLE REPAIR

1. REMOVE BATTERY

2. w/ Cruise Control:
REMOVE CRUISE CONTROL ACTUATOR

Remove the 3 bolts and cruise control actuator.

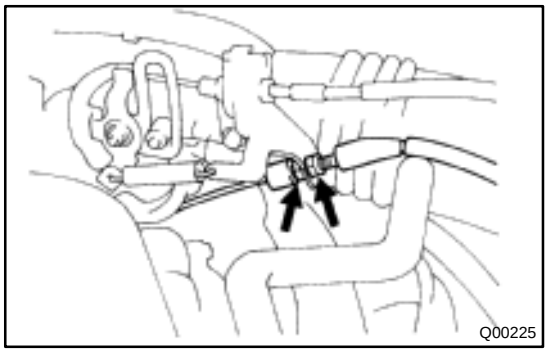
Q00225

3. DISCONNECT THROTTLE CABLE FROM ENGINE

Disconnect the cable from the throttle linkage.

4. REMOVE PARK/NEUTRAL POSITION SWITCH
(See page AX–5)

5. REMOVE VALVE BODY
(See page AX–7)

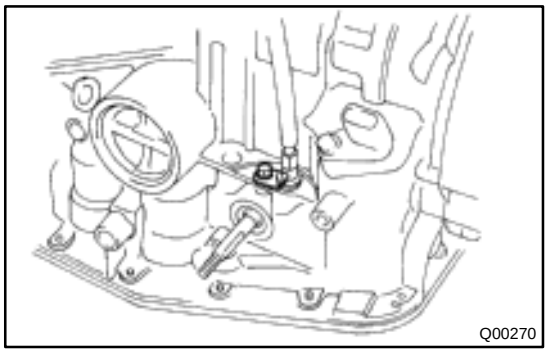
Q00270

6. REMOVE THROTTLE CABLE

(a) Remove the bolt and retaining plate.

(b) Pull out the cable from the transaxle case.

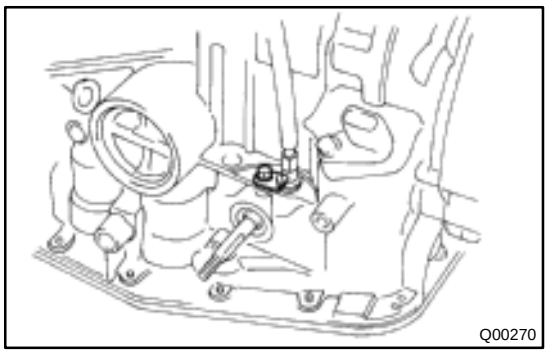
Q00270

7. INSTALL THROTTLE CABLE INTO TRANSAXLE CASE

(a) Make sure to push it in all the way.

(b) Install the retaining plate and bolt.

(c) Install and torque the bolt.
Torque: 5.4 N·m (55 kgf·cm, 48 in.·lbf)

8. INSTALL VALVE BODY
(See page AX–7)

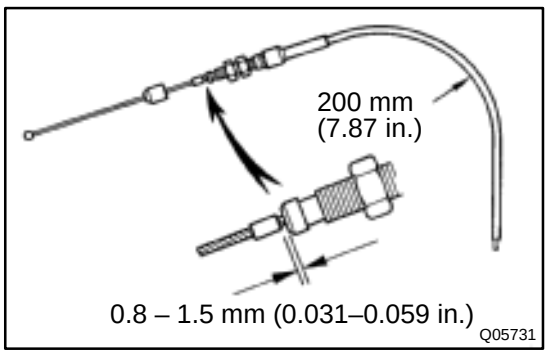

Q05731

9. IF THROTTLE CABLE IS NEW, STAKE STOPPER OR PAINT MARK ON INNER CABLE

HINT:

New cables do not have a staked cable stopper.

(a) Bend the cable so there is a radius of about 200 mm (7.87 in.).

(b) Pull the inner cable lightly until slight resistance is felt, and hold it there.

(c) Stake the stopper, 0.8–1.5 mm (0.031–0.059 in.) from the end of outer cable.

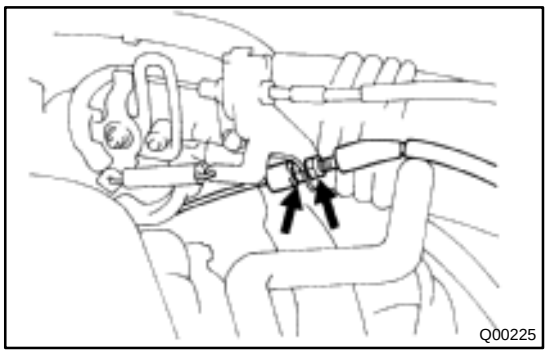

10. CONNECT THROTTLE CABLE TO ENGINE
Torque: 15 N·m (150 kgf·cm, 11 ft·lbf)
11. ADJUST THROTTLE CABLE
(See page DI–438)
12. INSTALL PARK/NEUTRAL POSITION SWITCH
(See page AX–5)

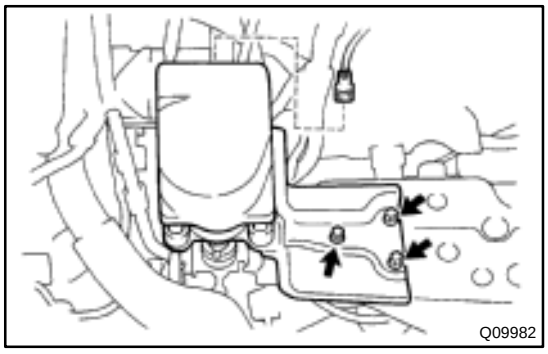

13. w/ Cruise Control:
INSTALL CRUISE CONTROL ACTUATOR
Install the cruise control actuator with the 3 bolts.
Torque: 13 N·m (130 kgf·cm, 9 ft·lbf)
14. INSTALL BATTERY
15. TEST DRIVE VEHICLE

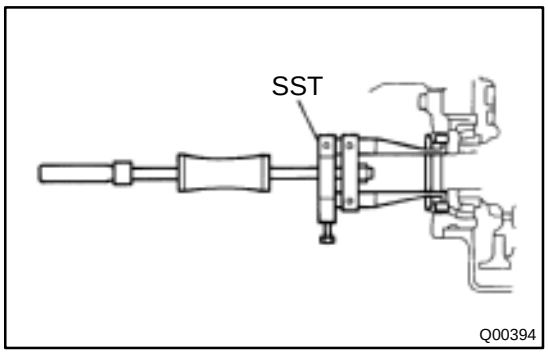

DIFFERENTIAL OIL SEAL

AX03S–01

ON–VEHICLE REPAIR

1. REMOVE FRONT DRIVE SHAFT
(See page SA–25)

2. REMOVE SIDE GEAR SHAFT OIL SEAL

Using SST, pull out the oil seal.
SST 09308–00010

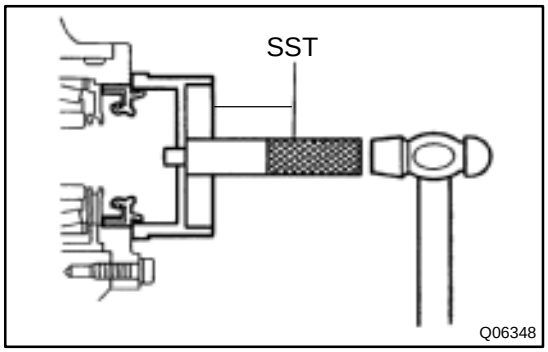

3. INSTALL LEFT SIDE GEAR SHAFT OIL SEAL

(a) Using SST and a hammer, drive in a new oil seal.
SST 09223–15020, 09351–32014 (09351–32130)
Oil seal depth: 0 ± 0.5 mm (0 ± 0.02 in.)

(b) Coat the lip of the oil seal with MP grease.

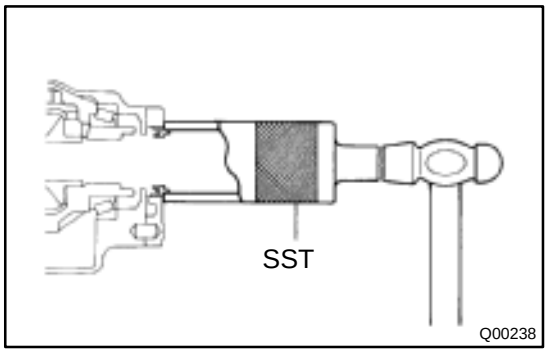

4. INSTALL RIGHT SIDE GEAR SHAFT OIL SEAL

(a) Using SST, drive in a new oil seal.
SST 09316–60010 (09316–00010)
Oil seal depth: 0 ± 0.5 mm (0 ± 0.02 in.)

(b) Coat the lip of the oil seal with MP grease.

5. INSTALL FRONT DRIVE SHAFT
(See page SA–25)

6. CHECK TRANSAXLE FLUID LEVEL
(See page DI–438)

SHIFT LOCK SYSTEM (TMC Made)

AX03T–01

LOCATION

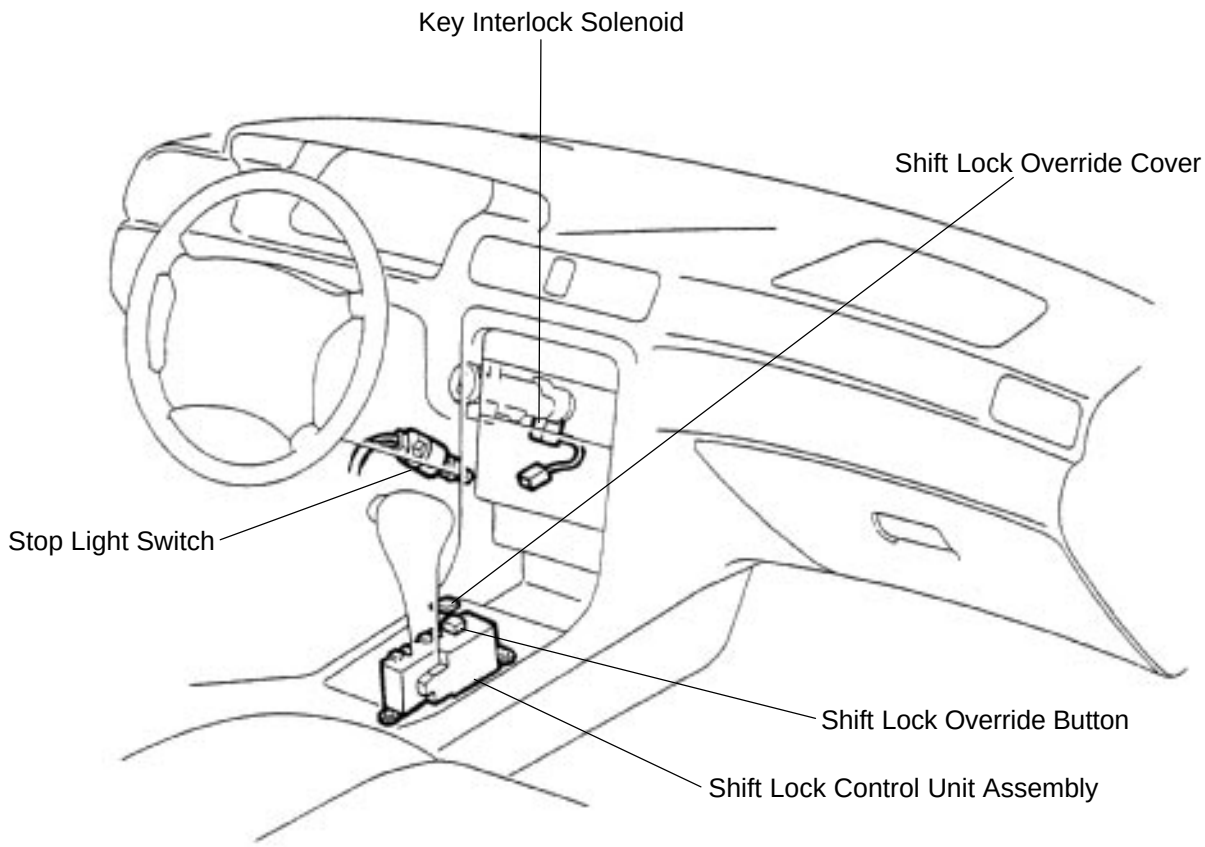

D01026

AX03U–02

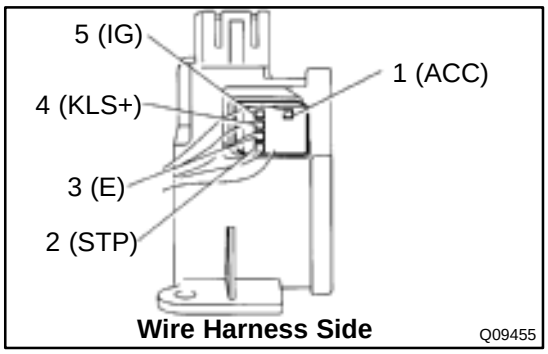

INSPECTION

1. INSPECT SHIFT LOCK CONTROL UNIT ASSEMBLY

Using a voltmeter, measure the voltage at each terminal.

HINT:

Do not disconnect the shift lock control unit assembly connector.

Terminal	Measuring Condition	Voltage (V)
1 – 3 (ACC – E)	Ignition switch ACC	10 – 14
5 – 3 (IG – E)	Ignition switch ON	10 – 14
2 – 3 (STP – E)	Depressing brake pedal	10 – 14
4 – 3 (KLS^+ – E)	(1) Ignition switch ACC and P position (2) Ignition switch ACC and except P position (3) Ignition switch ACC and except P position (After approx. 1 second)	0 7.5 – 11 6 – 9.5

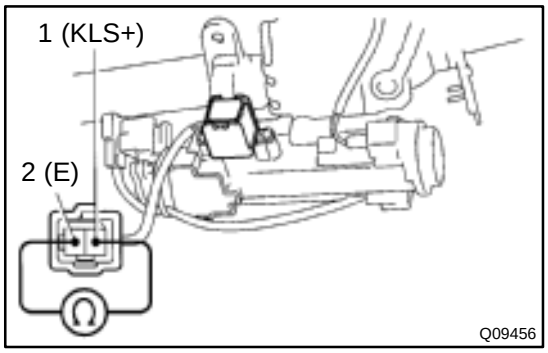

2. INSPECT KEY INTERLOCK SOLENOID

(a) Disconnect the solenoid connector.

(b) Using an ohmmeter, measure resistance between terminals.

Standard resistance: 12.5 – 16.5 Ω

If resistance value is not as specified, replace the solenoid.

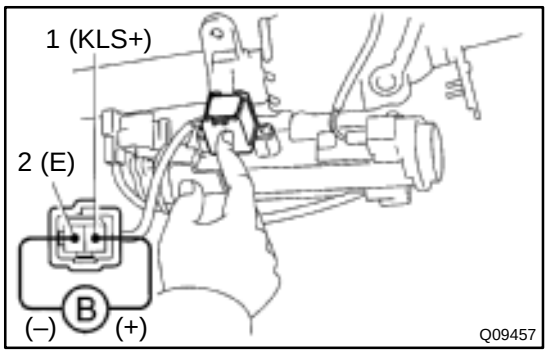

(c) Apply battery positive voltage between terminals. Check that an operation noise can be heard from the solenoid.

If the solenoid does not operated, replace the solenoid.

SHIFT LOCK SYSTEM (TMMK Made)

AX03V–01

LOCATION

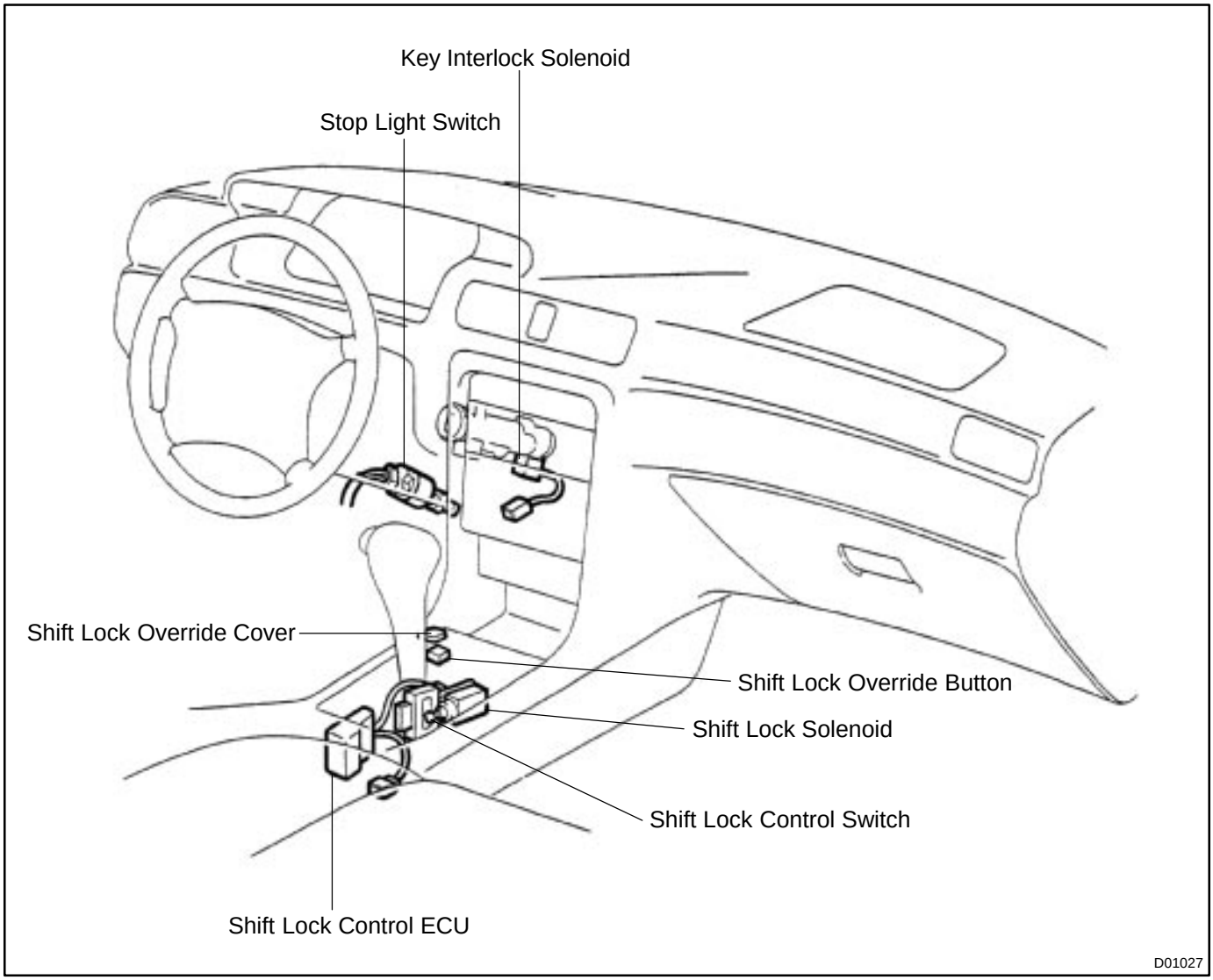

AX03W–01

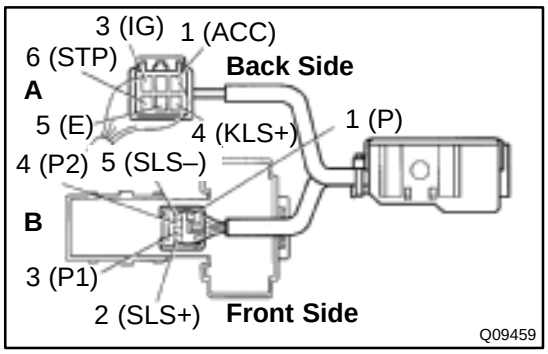

INSPECTION

1. INSPECT SHIFT LOCK CONTROL ECU

Using a voltmeter, measure voltage at each terminal.

HINT:

Do not disconnect the ECU connector.

Terminal	Measuring Condition	Voltage (V)
A, 1 – A, 5 (ACC – E)	Ignition switch ACC	10 – 14
A, 3 – A, 5 (IG – E)	Ignition switch ON	10 – 14
A, 6 – A, 5 (STP – E)	Depressing brake pedal	10 – 14
A, 4 – A, 5 (KLS^+ – E)	(1) Ignition switch ACC and P position (2) Ignition switch ACC and except P position (3) Ignition switch ACC and except P position (After approx. 1 second)	0 7.5 – 11 6 – 9.5
B, 2 – B, 5 (SLS^+ – SLS^-)	(1) Ignition switch ON and P position (2) Depress brake pedal (3) Except P position	0 8 – 13.5 0
B, 3 – B, 1 (P1 – P)	(1) Ignition switch ON, P position and depress brake pedal (2) Shift except P position under conditions above	0 9 – 13.5
B, 4 – B, 1 (P2 – P)	(1) Ignition switch ACC, P position (2) Shift except P position under conditions above	9 – 13.5 0

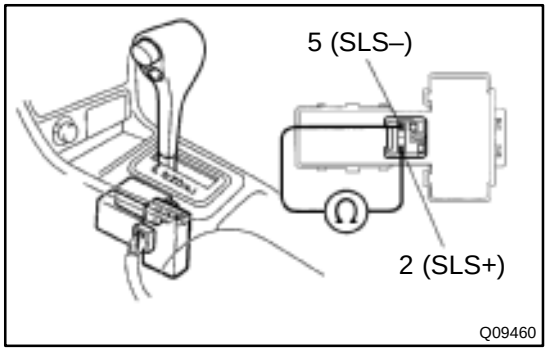

2. INSPECT SHIFT LOCK SOLENOID

(a) Disconnect the solenoid connector.

(b) Using an ohmmeter, measure resistance between terminals.

Standard resistance: 29 – 35 Ω

If resistance value is not as specified, replace the solenoid.

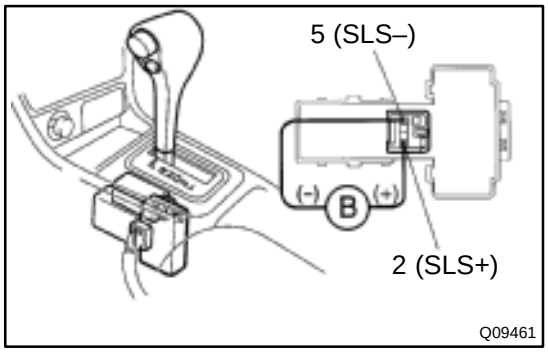

(c) Apply battery positive voltage between terminals. Check that operation.

If the solenoid does not operated, replace the solenoid noise can be heard from the solenoid.

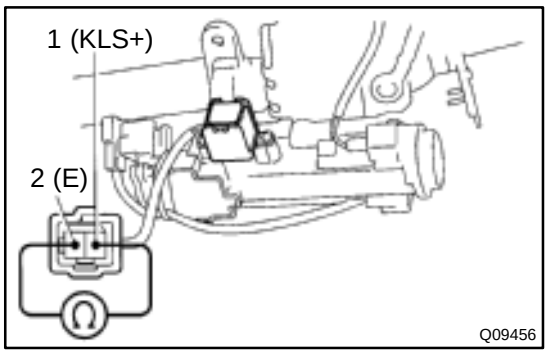

3. INSPECT KEY INTERLOCK SOLENOID

(a) Disconnect the solenoid connector.

(b) Using an ohmmeter, measure resistance between terminals.

Standard resistance: 12.5 – 16.5 Ω

If resistance value is not as specified, replace the solenoid.

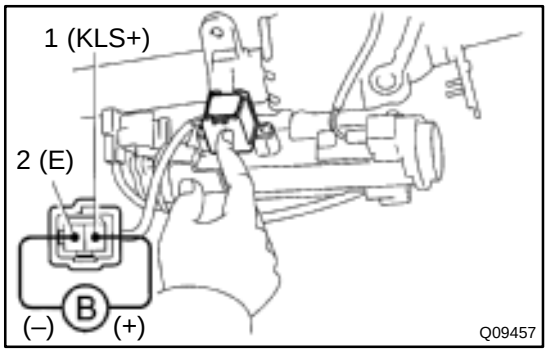

(c) Apply battery positive voltage between terminals. Check that an operation noise can be heard from the solenoid.

If the solenoid does not operated, replace the solenoid.

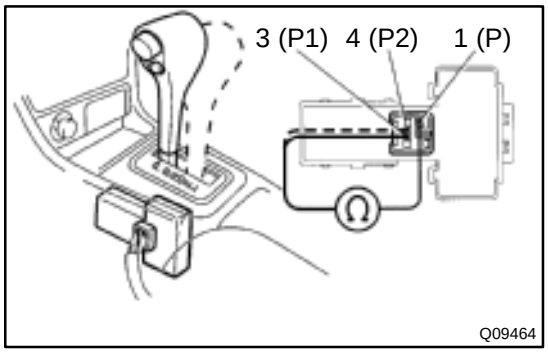

4. INSPECT SHIFT LOCK CONTROL SWITCH

Inspect that there is continuity between at each terminal.

Shift position	Tester connection	Specified value
P position (Release button is not pushed)	1 – 3 (P – P1)	Continuity
P position (Release button is pushed)	1 – 3 (P – P1) 1 – 4 (P – P2)	Continuity
R, N, D, 2, L position	1 – 4 (P – P2)	Continuity

If continuity is not as specified, replace the switch.

AUTOMATIC TRANSAXLE UNIT

AX03X–01

COMPONENTS

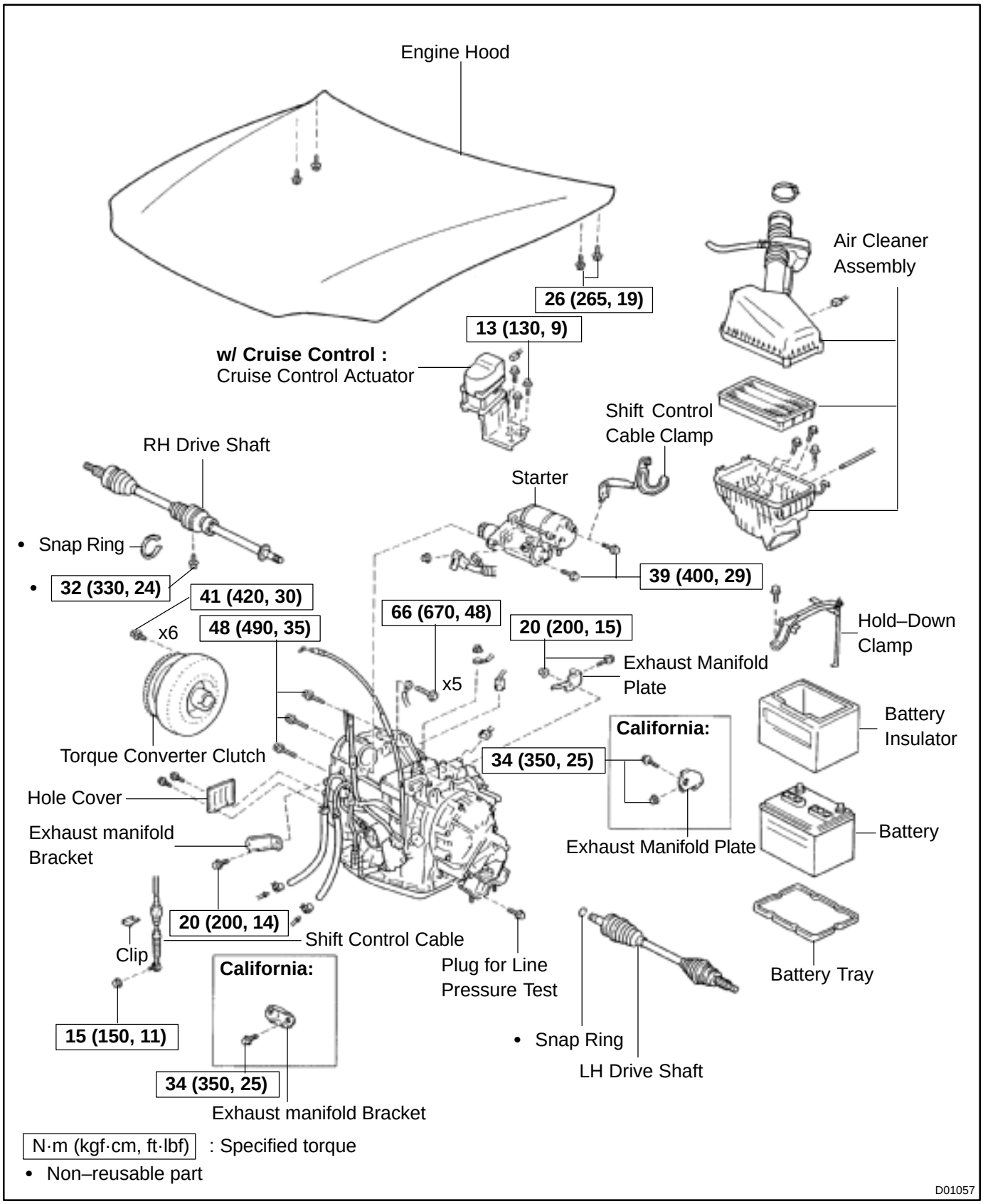

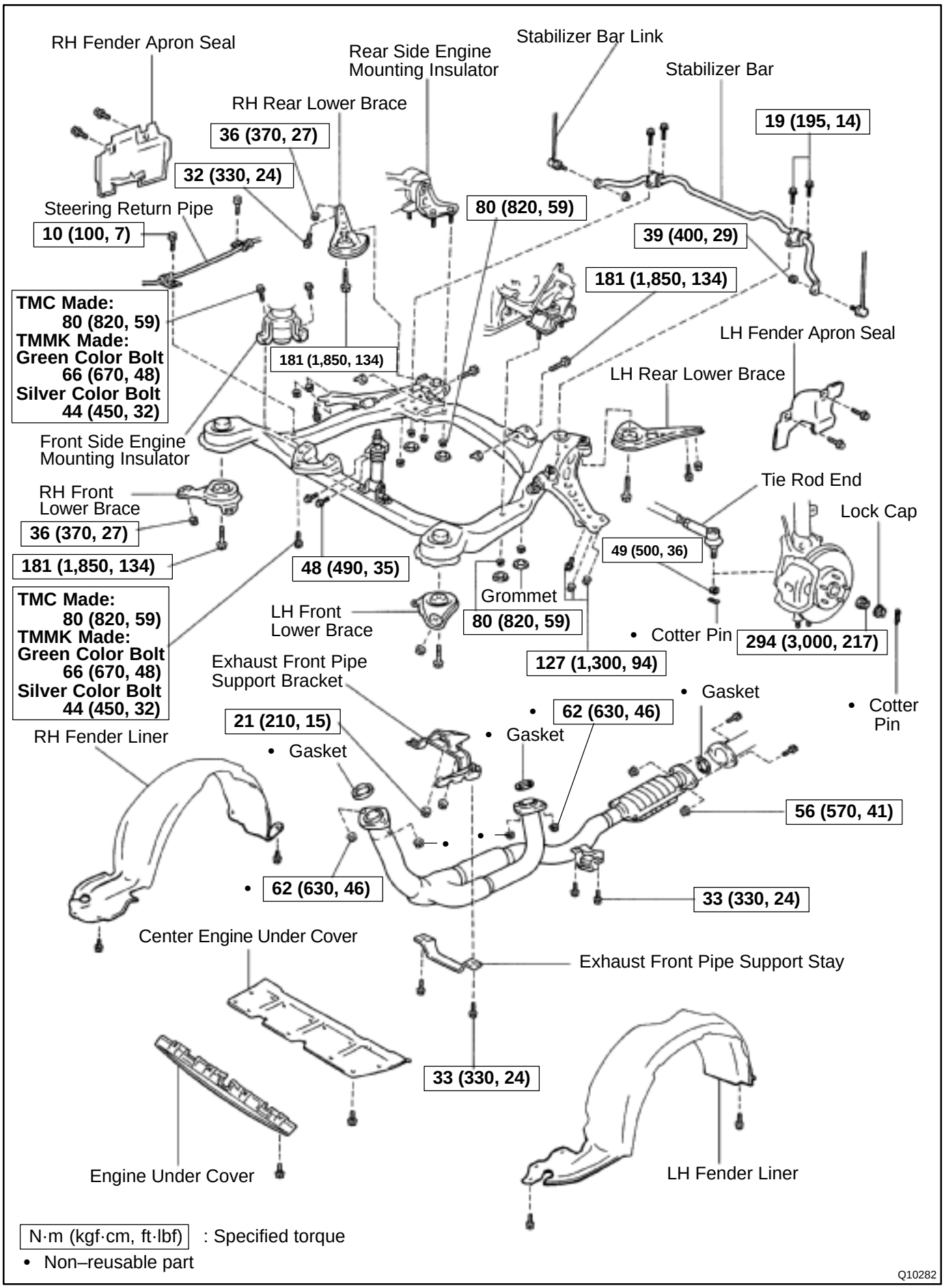
RH Fender Apron Seal
Rear Side Engine Mounting Insulator
Stabilizer Bar Link
Stabilizer Bar
RH Rear Lower Brace
36 (370, 27)
32 (330, 24)
19 (195, 14)
Steering Return Pipe
10 (100, 7)
80 (820, 59)
39 (400, 29)
181 (1,850, 134)
TMC Made:
80 (820, 59)
TMMK Made:
Green Color Bolt
66 (670, 48)
Silver Color Bolt
44 (450, 32)
181 (1,850, 134)
LH Fender Apron Seal
LH Rear Lower Brace
Front Side Engine Mounting Insulator
RH Front Lower Brace
36 (370, 27)
181 (1,850, 134)
48 (490, 35)
Tie Rod End
Lock Cap
49 (500, 36)
Grommet
LH Front Lower Brace
80 (820, 59)
• Cotter Pin
294 (3,000, 217)
127 (1,300, 94)
TMC Made:
80 (820, 59)
TMMK Made:
Green Color Bolt
66 (670, 48)
Silver Color Bolt
44 (450, 32)
Exhaust Front Pipe Support Bracket
• Gasket
• 62 (630, 46)
• Gasket
• Cotter Pin
21 (210, 15)
RH Fender Liner
• Gasket
56 (570, 41)
• 62 (630, 46)
33 (330, 24)
Center Engine Under Cover
Exhaust Front Pipe Support Stay
33 (330, 24)
Engine Under Cover
LH Fender Liner
N·m (kgf·cm, ft·lbf) : Specified torque
• Non–reusable part
Q10282

AX03Y–01

REMOVAL

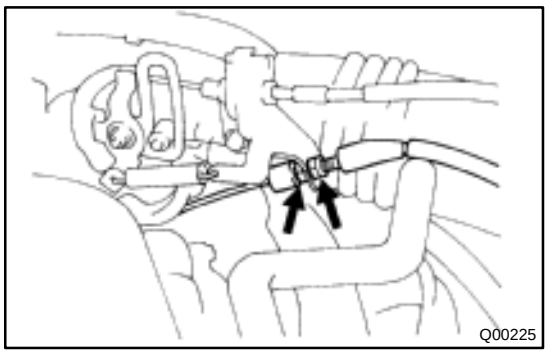
Q00225

1. REMOVE BATTERY

2. REMOVE AIR CLEANER ASSEMBLY

3. REMOVE THROTTLE CABLE FROM THROTTLE BODY

Torque: 15 N·m (150 kgf·cm, 11 ft·lbf)

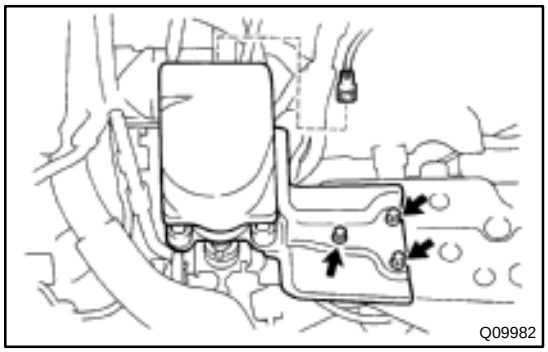
Q09982

4. w/ Cruise Control:
REMOVE CRUISE CONTROL ACTUATOR

(a) Disconnect the connector.

(b) Remove the 3 bolts and disconnect cruise control actuator with the bracket.

Torque: 13 N·m (130 kgf·cm, 9 ft·lbf)

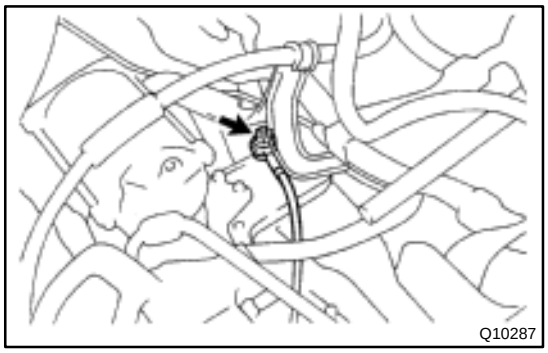
Q10287

5. DISCONNECT GROUND CABLE

6. DISCONNECT VEHICLE SPEED SENSOR CONNECTOR

7. DISCONNECT DIRECT CLUTCH SPEED SENSOR CONNECTOR

8. DISCONNECT PARK/NEUTRAL POSITION SWITCH CONNECTOR

9. DISCONNECT SOLENOID CONNECTOR

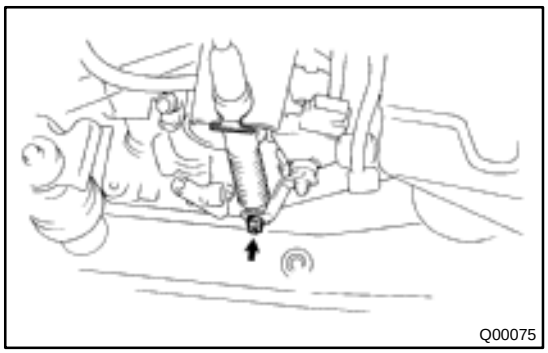
Q00075

10. DISCONNECT SHIFT CONTROL CABLE

(a) Remove the nut and disconnect the shift control cable from the park/neutral position switch.

Torque: 15 N·m (150 kgf·cm, 11 ft·lbf)

(b) Remove the clip and disconnect the shift control cable.

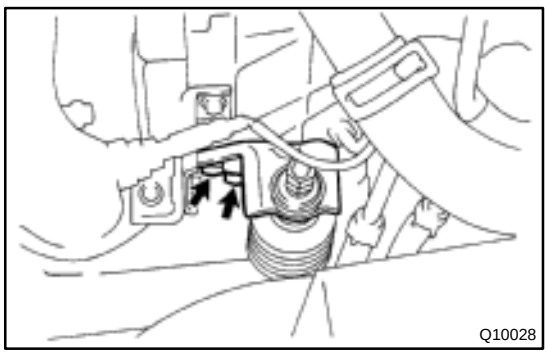
Q10028

11. REMOVE 2 ENGINE MOUNTING ABSORBER BOLTS

Torque: 48 N·m (490 kgf·cm, 35 ft·lbf)

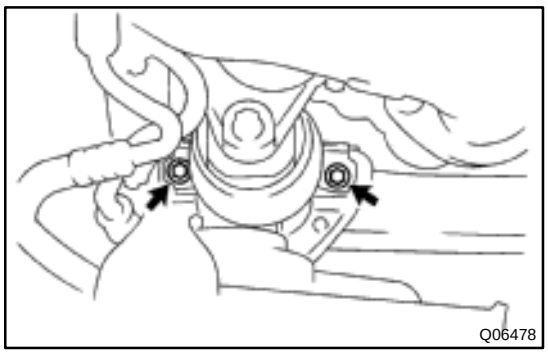

12. REMOVE 2 FRONT SIDE ENGINE MOUNTING BOLTS
Torque:
TMC Made: 80 N·m (820 kgf·cm, 59 ft·lbf)
TMMK Made:
Green color bolt: 66 N·m (670 kgf·cm, 48 ft·lbf)
Silver color bolt: 44 N·m (440 kgf·cm, 32 ft·lbf)

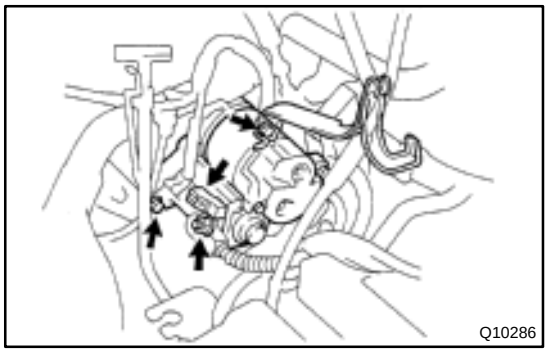

13. REMOVE STARTER AND A/T SHIFT CABLE CLAMP
(a) Disconnect the connector and remove the nut.
(b) Remove the 2 bolts, starter and A/T shift cable clamp.
Torque: 39 N·m (400 kgf·cm, 29 ft·lbf)

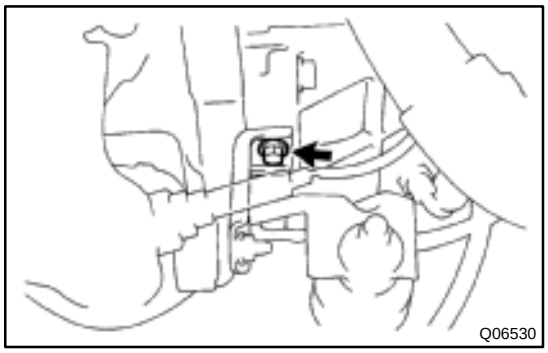

14. REMOVE EXHAUST MANIFOLD BRACKET MOUNTING BOLT
Torque:
Except California: 20 N·m (200 kgf·cm, 15 ft·lbf)
California: 34 N·m (350 kgf·cm, 25 ft·lbf)



15. REMOVE 5 TRANSAXLE–TO–ENGINE BOLTS AND DISCONNECT GROUND TERMINAL
Torque: 66 N·m (670 kgf·cm, 48 ft·lbf)
16. REMOVE ENGINE HOOD
(a) Disconnect the washer pipe.
(b) Remove the 4 bolts and engine hood.
Torque: 26 N·m (265 kgf·cm, 19 ft·lbf)
17. RAISE AND SUPPORT VEHICLE SECURELY
18. REMOVE FRONT WHEELS
Torque: 103 N·m (1,050 kgf·cm, 76 ft·lbf)
19. REMOVE DIFFERENTIAL FLUID DRAIN PLUG AND GASKET
HINT:
At the time of installation, please refer to the following item.
Replace the used gasket with a new gasket.
20. DRAIN DIFFERENTIAL FLUID
21. REMOVE LH AND RH ENGINE SIDE COVERS
22. REMOVE LH AND RH FRONT DRIVE SHAFTS
(See page SA–25)

23. REMOVE ENGINE UNDER FRONT COVER AND NO.4 CENTER ENGINE UNDER COVER

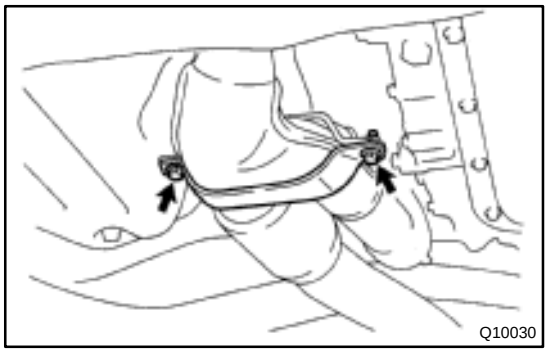
Q10030

24. REMOVE EXHAUST FRONT PIPE

(a) Remove the 2 bolts and exhaust front pipe support stay.
Torque: 33 N·m (330 kgf·cm, 24 ft·lbf)

(b) Remove the 4 nuts.
Torque: 62 N·m (630 kgf·cm, 46 ft·lbf)

HINT:
At the time of installation, please refer to the following item.
Replace the used nuts with new once.

(c) Remove the 2 bolts and nuts.
Torque: 56 N·m (570 kgf·cm, 41 ft·lbf)

HINT:
At the time of installation, please refer to the following item.
Replace the used nuts with new once.

(d) Remove the 2 exhaust front pipe clamp bolts and exhaust front pipe.
Torque: 33 N·m (330 kgf·cm, 24 ft·lbf)

(e) Remove the 3 gaskets.

HINT:
At the time of installation, please refer to the following item.
Replace the used gaskets with new once.

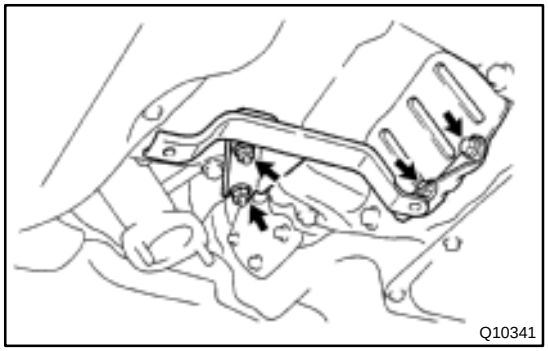
Q10341

(f) Remove the 2 nuts, 2 bolts, exhaust front pipe support bracket and hole cover.
Torque:
Exhaust front pipe support bracket mounting nut:
21 N·m (210 kgf·cm, 15 ft·lbf)
Hole plug mounting bolt:
20 N·m (200 kgf·cm, 15 ft·lbf)

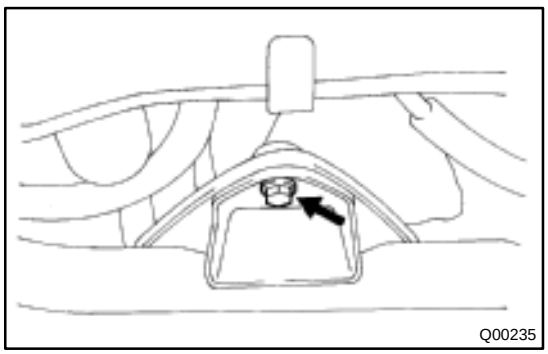
Q00235

25. REMOVE FRONT SIDE ENGINE MOUNTING INSULATOR BOLT
Torque:
TMC Made:
80 N·m (820 kgf·cm, 59 ft·lbf)
TMMK Made:
Green color bolt: 66 N·m (670 kgf·cm, 48 ft·lbf)
Silver color bolt: 44 N·m (440 kgf·cm, 32 ft·lbf)

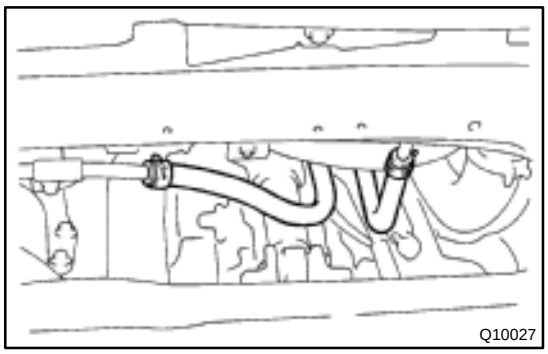

26. DISCONNECT 2 OIL COOLER HOSES

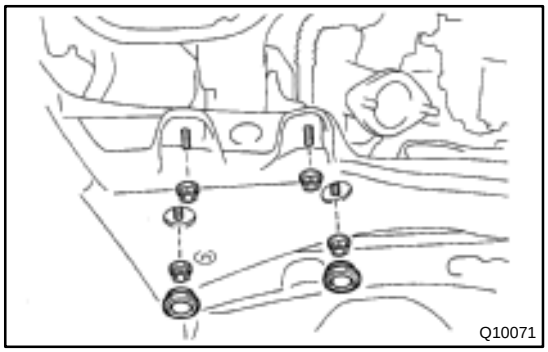

27. REMOVE REAR SIDE ENGINE MOUNTING NUT

(a) Remove the 2 grommets.

(b) Remove the 4 nuts.

Torque: 80 N·m (820 kgf·cm, 59 ft·lbf)

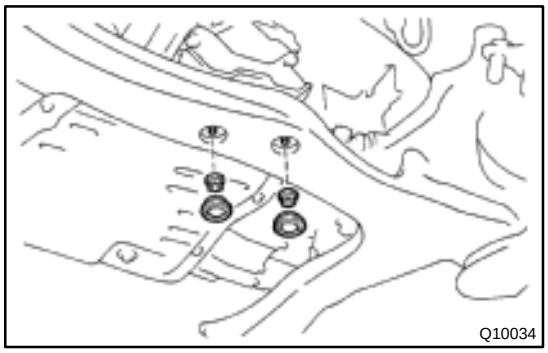

28. REMOVE LEFT SIDE TRANSAXLE MOUNTING NUT

(a) Remove the 2 grommets.

(b) Remove the 2 nuts.

Torque: 80 N·m (820 kgf·cm, 59 ft·lbf)

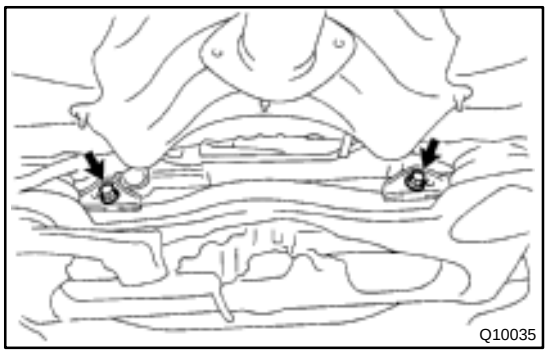

29. REMOVE STEERING GEAR HOUSING

(a) Remove the 4 bolts, LH and RH stabilizer bar brackets and bushings.

Torque: 19 N·m (195 kgf·cm, 14 ft·lbf)

(b) Remove the front stabilizer bar.

(See page SA–47)

(c) Remove the 2 steering gear housing mounting bolts and nuts.

Torque: 181 N·m (1,850 kgf·cm, 134 ft·lbf)

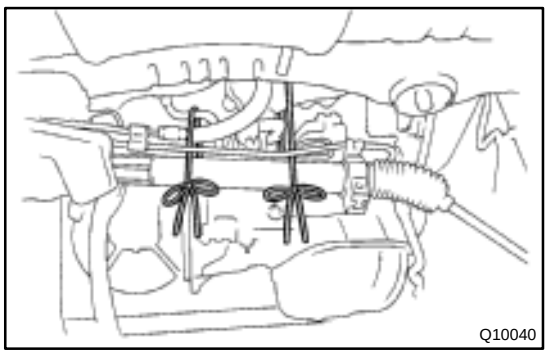

30. SUPPORT STEERING GEAR HOUSING, AS SHOWN

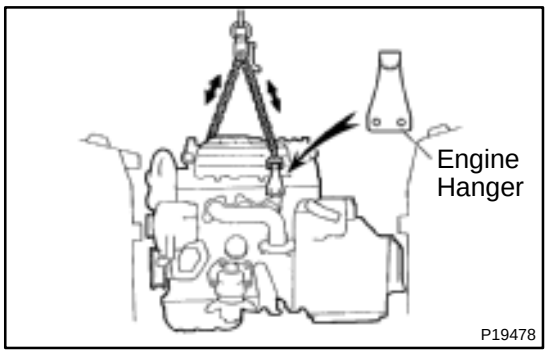

31. ATTACH ENGINE SLING DEVICE TO ENGINE HANGERS

(a) Install the No.2 engine hanger in the correct direction.
Part No.:
No.2 engine hanger: 12282–20020
Bolt: 91642–80825
Torque: 20 N·m (200 kgf·cm, 14 ft·lbf)

(b) Attach the engine chain hoist to the engine hangers.

CAUTION:
Do not attempt to hang the engine by hooking the chain to any other part.

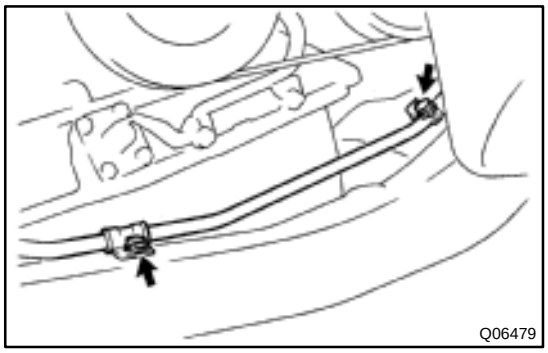

32. REMOVE FRONT FRAME ASSEMBLY

(a) Remove the 2 bolts and PS reservoir pipe mounting brackets.
Torque: 10 N·m (100 kgf·cm, 7 ft·lbf)

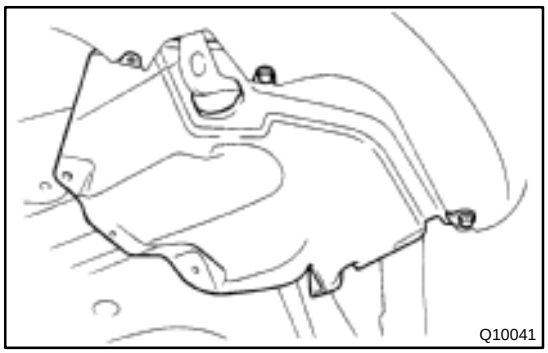

(b) Remove the 4 screws and turn over the front side of the LH and RH fender liners.

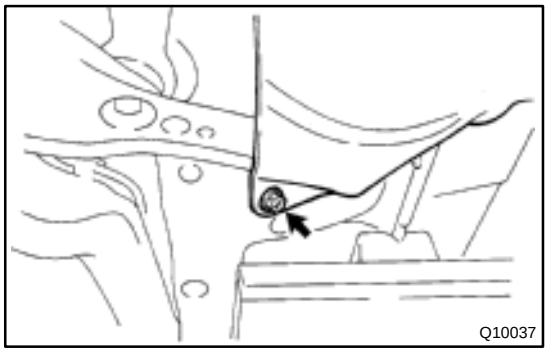

(c) Remove the 2 screws and turn over the rear side of LH and RH fender liners.



(d) Remove the 6 bolts and 4 nuts.
Torque:
19 mm head bolt: 181 N·m (1,850 kgf·cm, 134 ft·lbf)
14 mm head bolt: 32 N·m (330 kgf·cm, 24 ft·lbf)
Nut: 36 N·m (370 kgf·cm, 27 ft·lbf)

(e) Remove the front frame assembly.

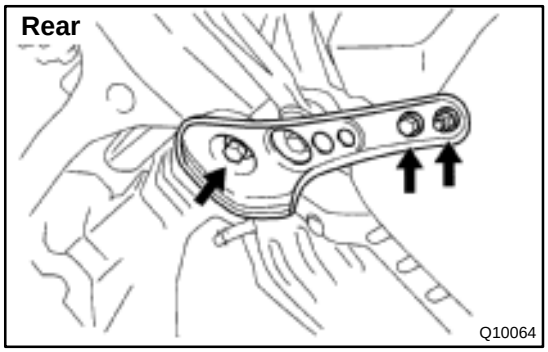

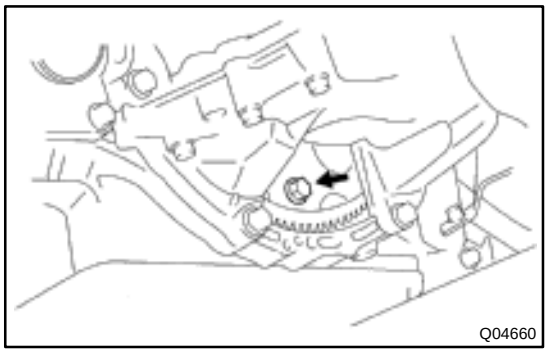

33. SUPPORT TRANSAXLE WITH A TRANSMISSION JACK

34. REMOVE TORQUE CONVERTER CLUTCH MOUNTING BOLTS

Turn the crankshaft to gain access to each bolt, remove the 6 bolts with holding the crankshaft pulley bolt by a wrench.

Torque: 41 N·m (420 kgf·cm, 30 ft·lbf)

HINT:
At the time of installation, please refer to the following item.
First install black colored bolt and then the 5 other bolts.

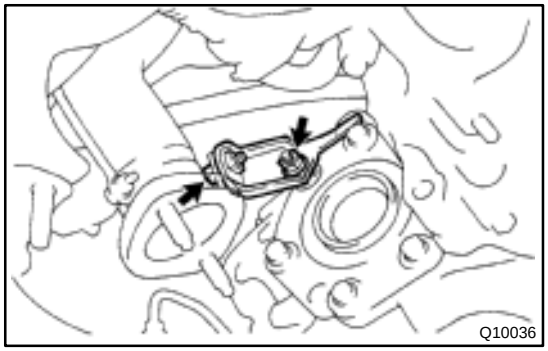

35. REMOVE EXHAUST MANIFOLD PLATE

(a) Remove the bolt, nut and exhaust manifold plate.
Torque:
Except California: 20 N·m (200 kgf·cm, 15 ft·lbf)
California: 34 N·m (350 kgf·cm, 25 ft·lbf)

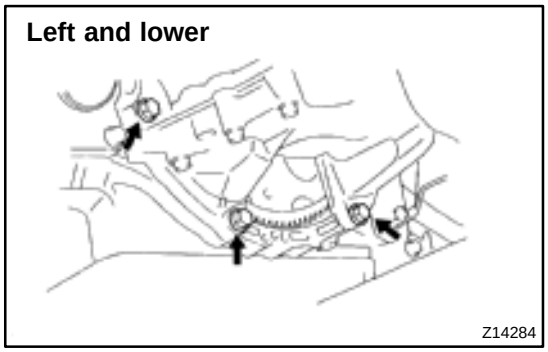

36. REMOVE 3 LOWER TRANSAXLE–TO–ENGINE BOLTS
Torque: 46 N·m (470 kgf·cm, 34 ft·lbf)

37. REMOVE TRANSAXLE ASSEMBLY

Separate the transaxle and engine, and lower the transaxle.

AX03Z–01

INSTALLATION

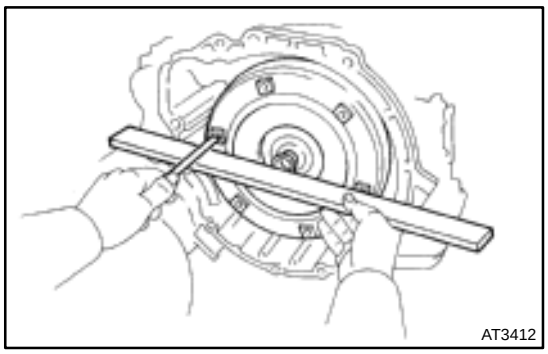

1. CHECK TORQUE CONVERTER CLUTCH INSTALLATION

Using a scale and a straight edge, measure from the installed surface to the transaxle housing.

Correct distance: 13.7 mm (0.539 in.) or more

2. TRANSAXLE INSTALLATION

Installation is in the reverse order of removal.
(See page AX–23)

HINT:

After installation, check and inspect items as follows.

- Fluid level. (See page DI–438)
- Front wheel alignment. (See page SA–4)
- Do the road test. (See page DI–438)
- Hood. (See page BO–10)

TORQUE CONVERTER CLUTCH AND DRIVE PLATE

AX040–01

INSPECTION

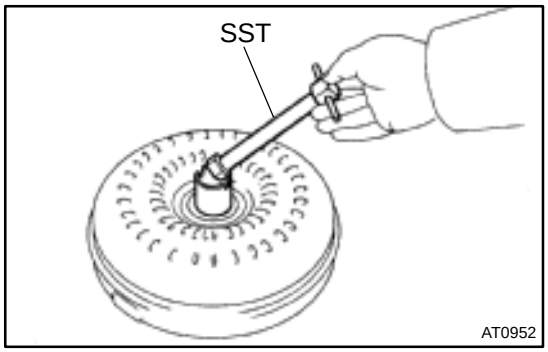

1. INSPECT ONE–WAY CLUTCH

(a) Install SST into the inner race of the one–way clutch.
SST 09350–32014 (09351–32020)

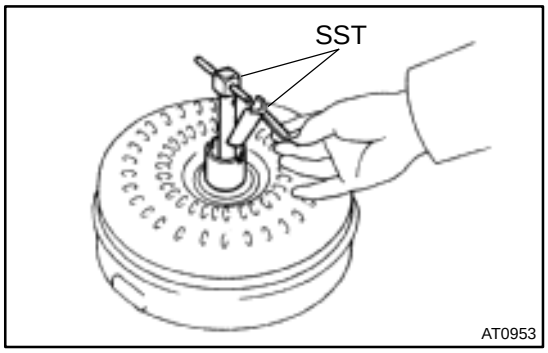

(b) Install SST so that it fits in the notch of the converter hub and outer race of the one–way clutch.
SST 09350–32014 (09351–32010)

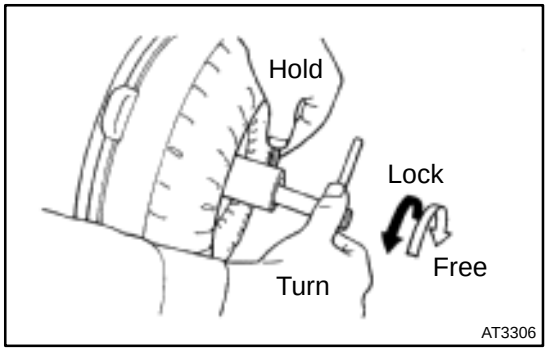

(c) With the torque converter clutch standing on its side,the clutch locks when turned counterclockwise, and rotates freely and smoothly clockwise.

If necessary, clean the converter and retest the clutch.
Replace the converter if the clutch still fails the test.

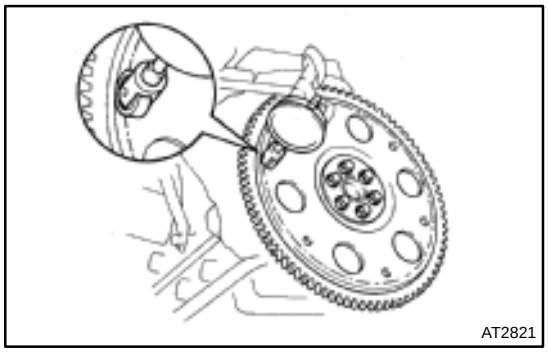

2. MEASURE DRIVE PLATE RUNOUT AND INSPECT RING GEAR

(a) Set up a dial indicator, and measure the drive plate runout.

(b) Check the damage of the ring gear.
Maximum runout: 0.20 mm (0.0079 in.)

If the runout is not within specification or ring gear is damaged, replace the drive plate.
Torque: 83 N·m (850 kgf·cm, 61 ft·lbf)

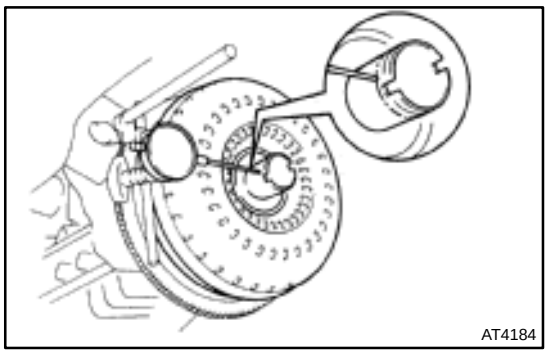

3. MEASURE TORQUE CONVERTER CLUTCH SLEEVE RUNOUT

(a) Temporarily mount the torque converter clutch to the drive plate. Set up a dial indicator and measure the torque converter clutch sleeve runout.

Maximum runout: 0.30 mm (0.0118 in.)

If the runout is not within the specification, try to correct by reorienting the installation of the converter.

HINT:

Mark the position of the converter to ensure the correct installation.

(b) Remove the torque converter clutch.

CLIP

REPLACEMENT

BO0LJ–01

The removal and installation methods of typical clips used in body parts are shown in the table below.
HINT:
If the clip is damaged during the operation, always replace it with a new clip.

Shape (Example)	Removal/Installation
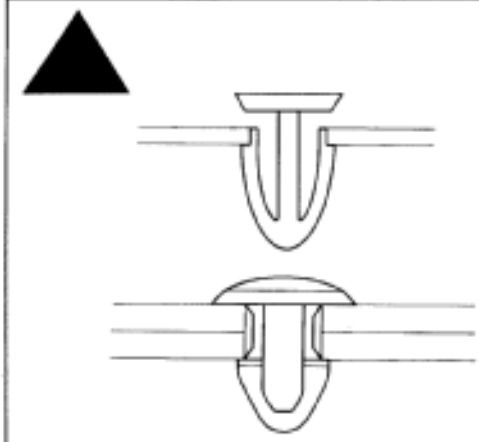	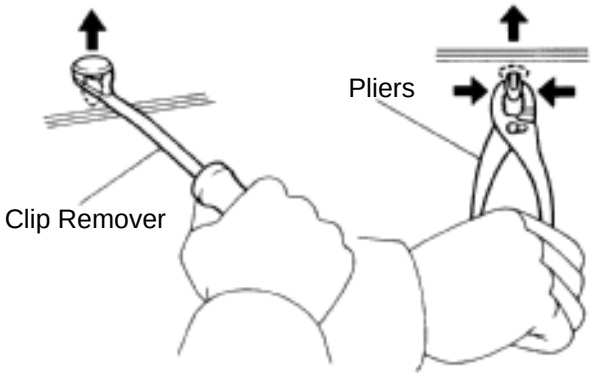
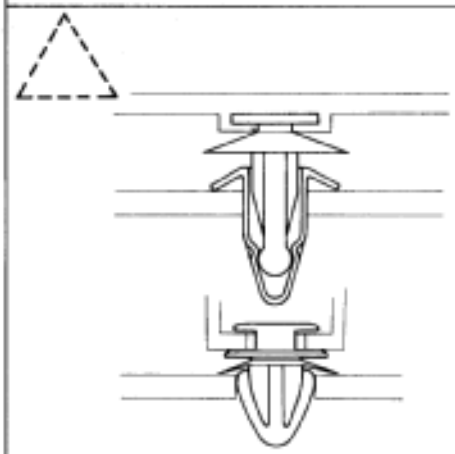	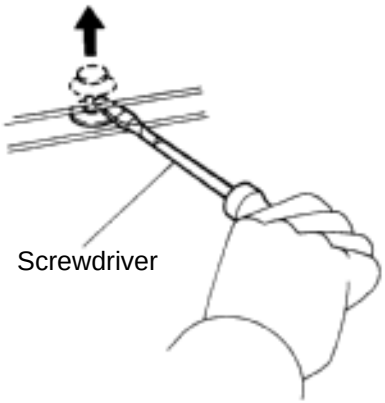
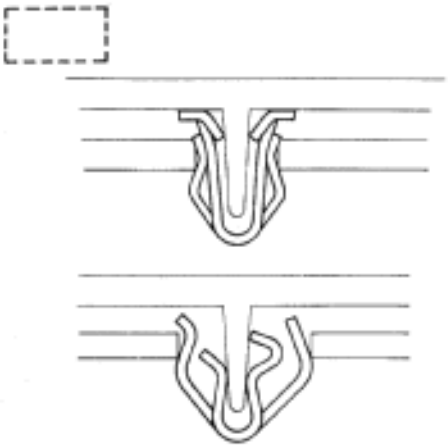	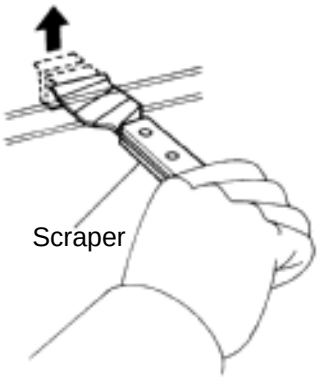

V00005

Shape (Example)	Removal/Installation
	Removal Installation 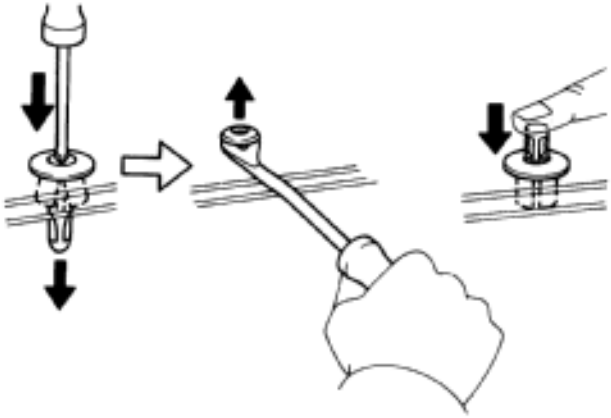
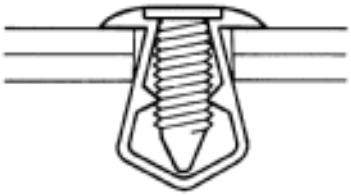	Removal Installation 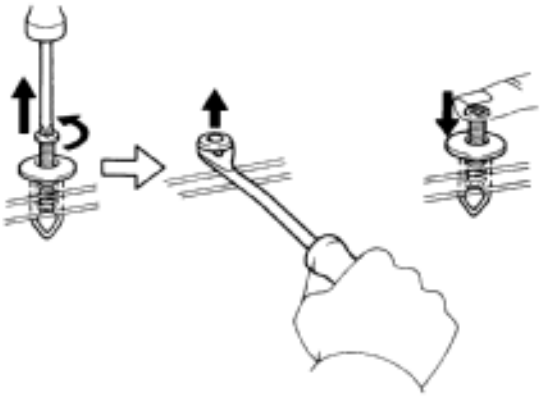

V00012

SRS AIRBAG

BO0KU–01

PRECAUTION

The CAMRY is equipped with SRS (Supplemental Restraint System) such as the driver airbag, front passenger airbag, side airbag and seat belt pretensioner. Failure to carry out service operation in the correct sequence could cause the SRS to unexpectedly deploy during servicing, possibly leading to a serious accident. Before servicing (including removal or installation of parts, inspection or replacement), be sure to read the precautionary notices in the RS section.

FRONT BUMPER

COMPONENTS

BO0KV–01

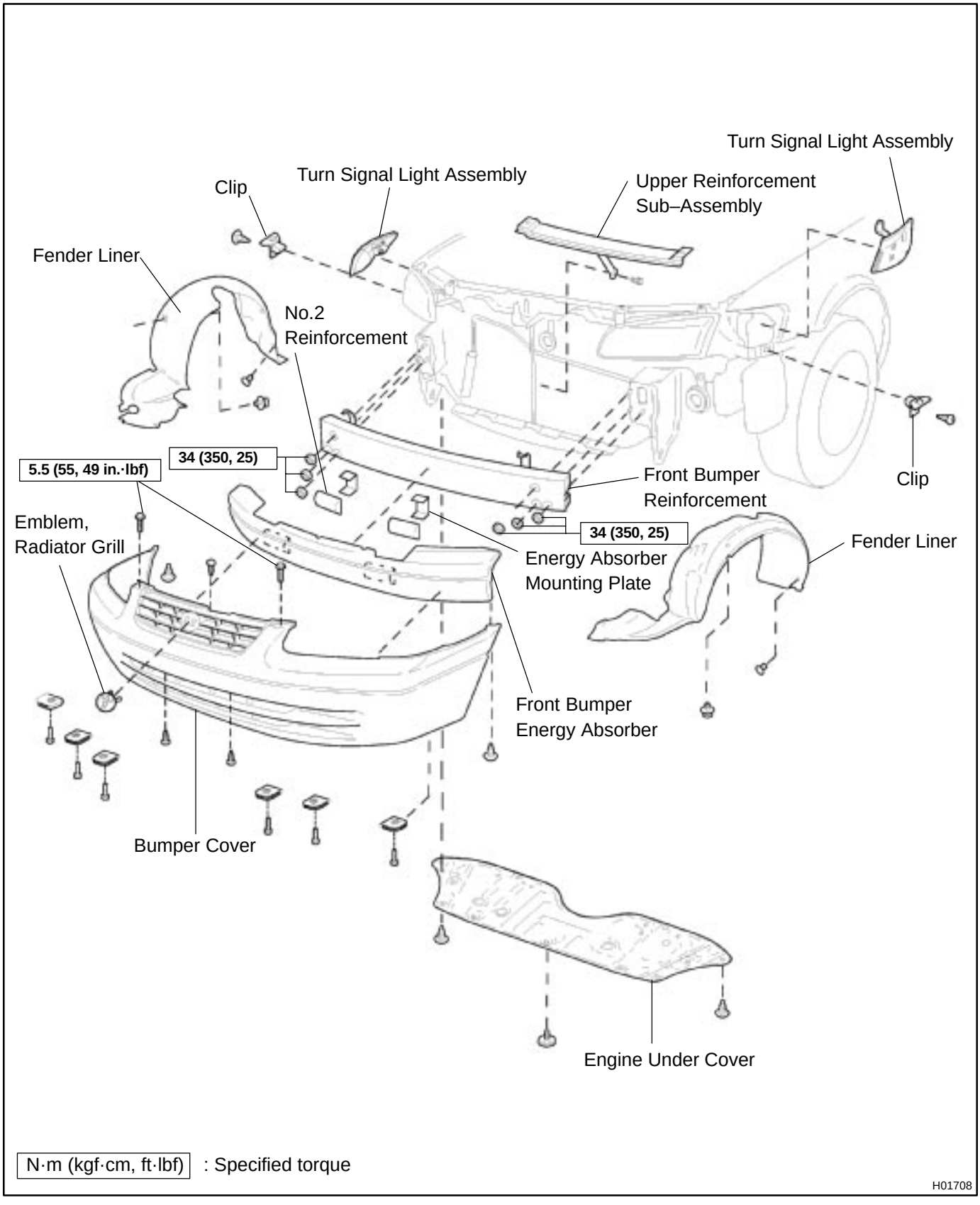

BO0KW–01

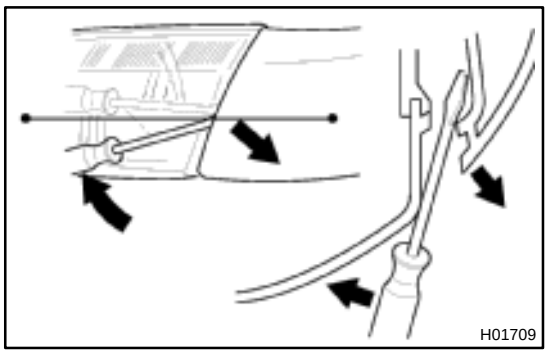

REMOVAL

1. REMOVE THESE PARTS:

(a) Engine under cover

(b) Fender liner

(c) Turn signal light assembly

HINT:

Remove the light assembly as shown.

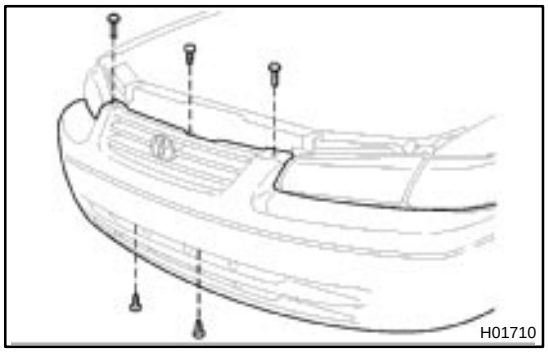

2. REMOVE BUMPER COVER

(a) Remove the 2 bolts and 3 clips.

Torque: 5.5 N·m (55 kgf·cm, 49 in.·lbf)

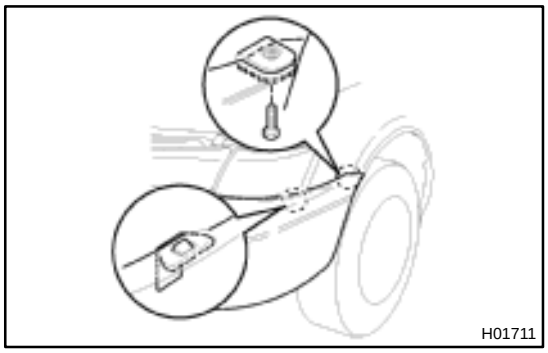

(b) Remove the bolt holding the bumper end to the fender.

(c) Pull the bumper cover forward to remove the bumper cover from the clip under the turn signal light area.

(d) Pull the bumper cover forward to remove it.

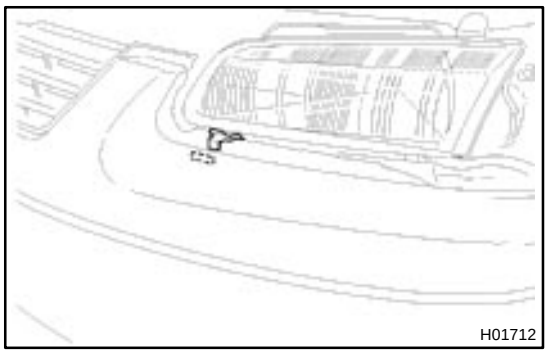

HINT:

At the time of installation, please refer to the refer to the following item.

Align the holes of the bumper cover with the 2 bumper stays of the reinforcement.

3. REMOVE THESE PARTS:

(a) Front bumper energy absorber

(b) Front bumper reinforcement

Torque: 34 N·m (350 kgf·cm, 25 ft·lbf)

(c) Front bumper upper reinforcement subassembly

BO0KX–01

INSTALLATION

Installation is in the reverse order of removal (See page BO–5).

REAR BUMPER

BO0KY–01

COMPONENTS

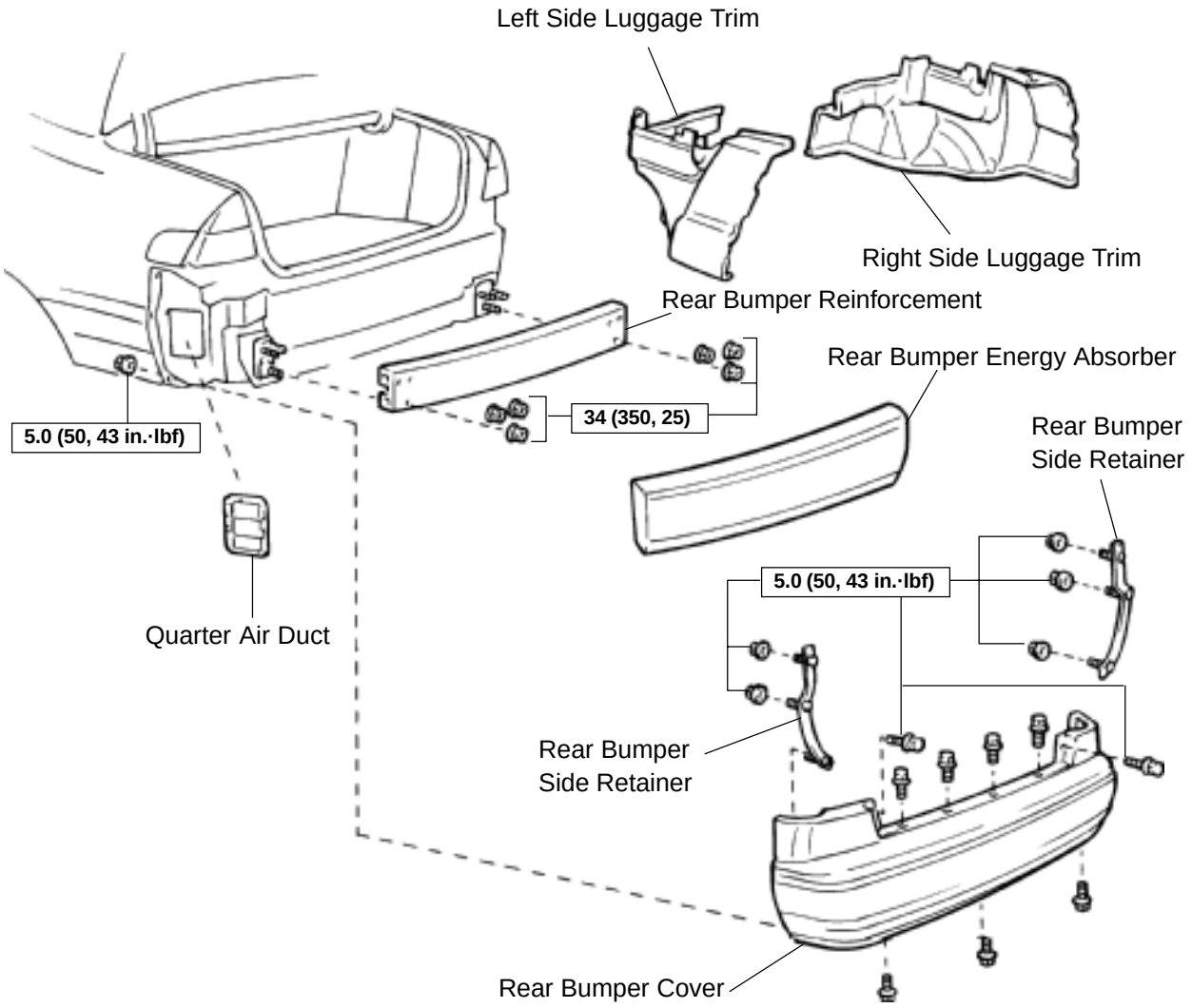

N·m (kgf·cm, ft·lbf) : Specified Torque

H01713

BO0KZ–01

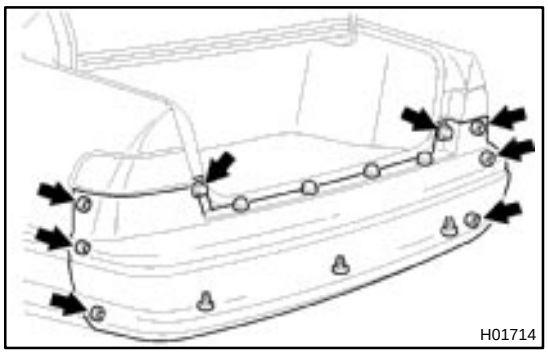

REMOVAL

1. REMOVE THESE PARTS:

(a) Right side luggage trim

(b) Left side luggage trim

2. REMOVE REAR BUMPER COVER

(a) Remove the 7 clips, 2 bolts and 6 nuts from the bumper cover.

Torque: 5.0 N·m (50 kgf·cm, 43 in.·lbf)

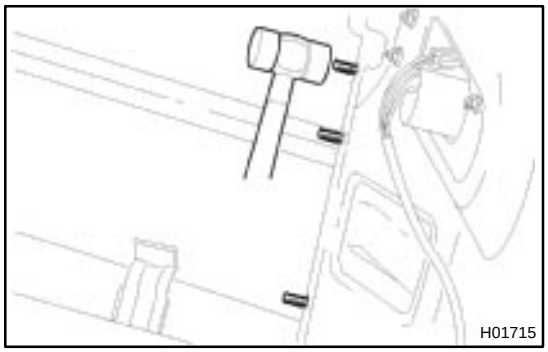

(b) Pull the bumper cover rearward to remove it.

HINT:

With a plastic hammer, tap the ends of the bumper end bolts.

(c) Using a screwdriver, slide the rear bumper side retainers from the bumper ends.

(d) Remove the 2 gaskets from the side retainers.

HINT:

Use 2 new gaskets.

3. REMOVE THESE PARTS:

(a) Rear bumper energy absorber

(b) Rear bumper reinforcement

Torque: 34 N·m (350 kgf·cm, 25 ft·lbf)

BO0L0–01

INSTALLATION

Installation is in the reverse order of removal (See page BO–8).

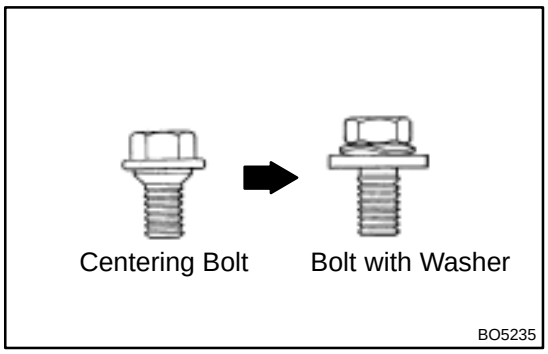

HOOD

ADJUSTMENT

BO0L1–01

HINT:

Since the centering bolt is used as the hood hinge and lock set bolt, the hood and lock can not be adjusted with it on. Substitute a bolt and washer for the centering bolt.

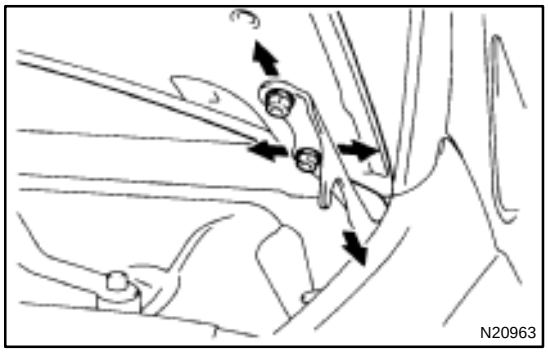

1. ADJUST HOOD IN FORWARD/REARWARD AND LEFT/RIGHT DIRECTIONS

Adjust the hood by loosening the hood side hinge bolts.

Torque: 26 N·m (260 kgf·cm, 19 ft·lbf)

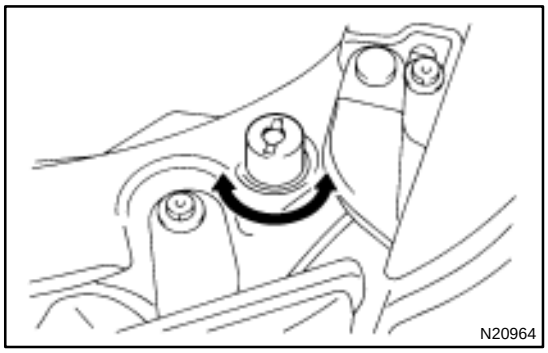

2. ADJUST FRONT EDGE OF HOOD IN VERTICAL DIRECTIONS

Adjust the hood by turning the cushions.

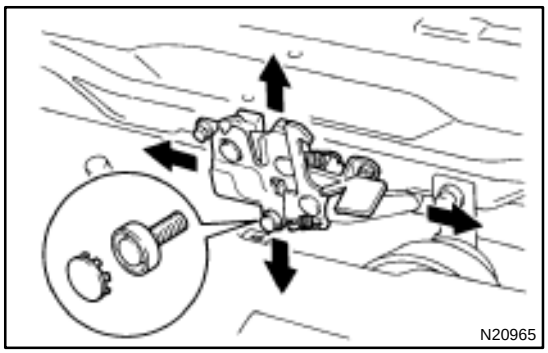

3. ADJUST HOOD LOCK

(a) Replace each centering bolt with a regular bolt and washer.

Torque: 8.0 N·m (80 kgf·cm, 71 in.·lbf)

HINT:

Remove the anti–theft bolt cover, then remove the lower hood lock bolt. You may have to remove the front bumper to access this bolt.

(b) Adjust the lock by loosening the bolts.

FRONT DOOR

COMPONENTS

BO0L2–01

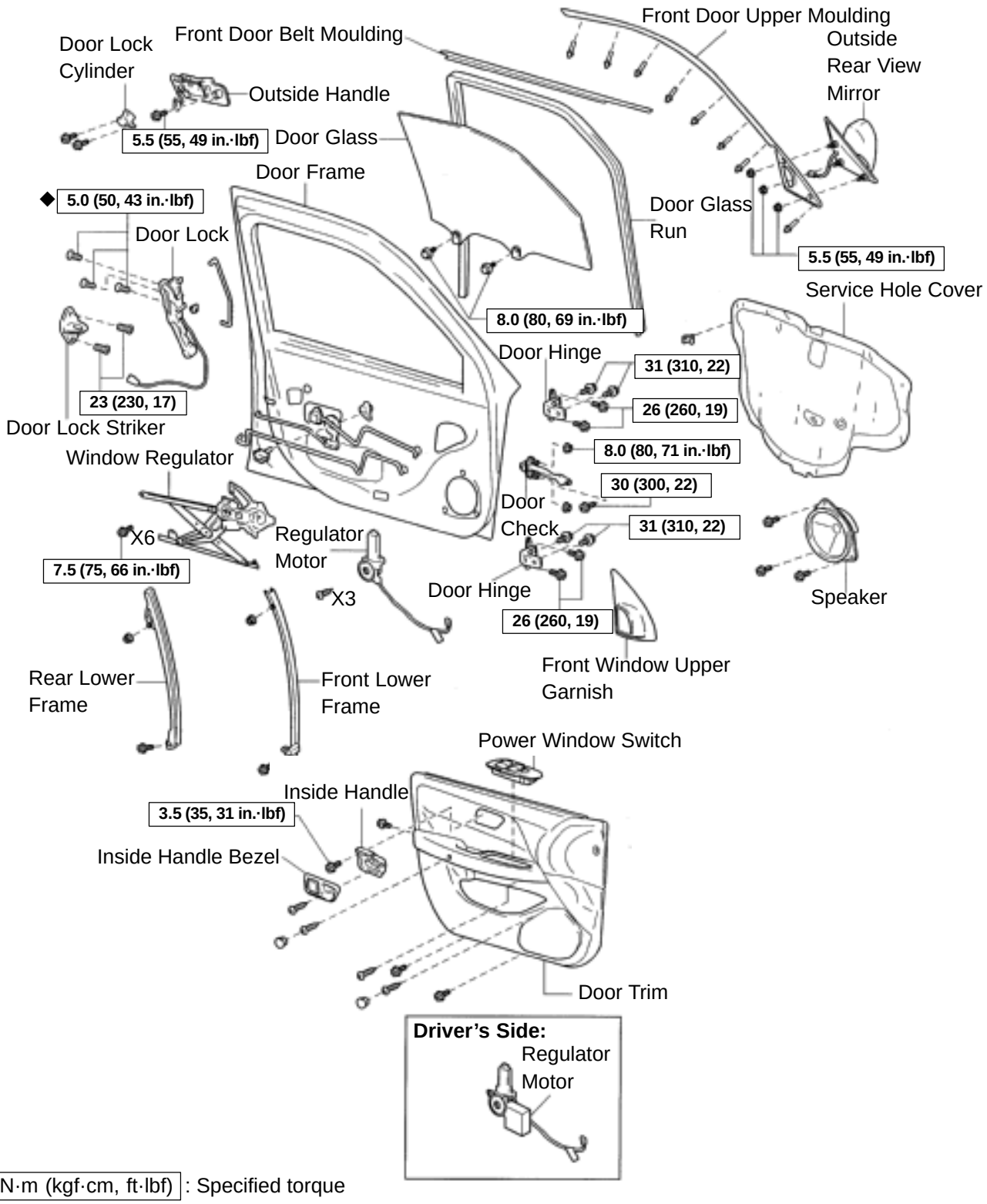

BO0L3–01

DISASSEMBLY

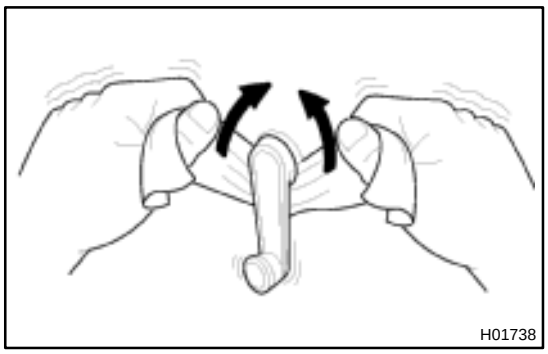

1. w/o Power Window:

REMOVE REGULATOR HANDLE

Pull off the snap ring with a shop rag and remove the regulator handle and plate.

HINT:

At the time of assembly, please refer to the following item.

With the door window fully closed, install the plate and the regulator handle with the snap ring.

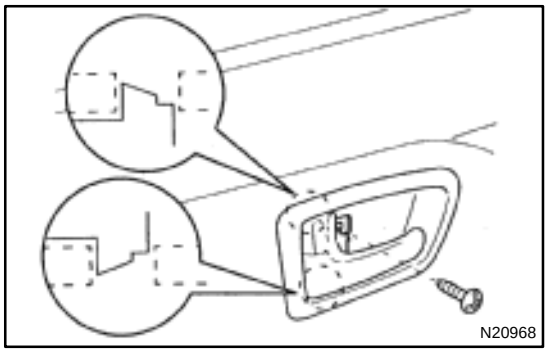

2. REMOVE INSIDE HANDLE BEZEL

(a) Using a screwdriver, pry open the screw cover and remove the screw.

HINT:

Tape the screwdriver tip before use.

(b) Using a screwdriver, pry out the bezel.

HINT:

Tape the screwdriver tip before use.

3. REMOVE FRONT WINDOW UPPER GARNISH

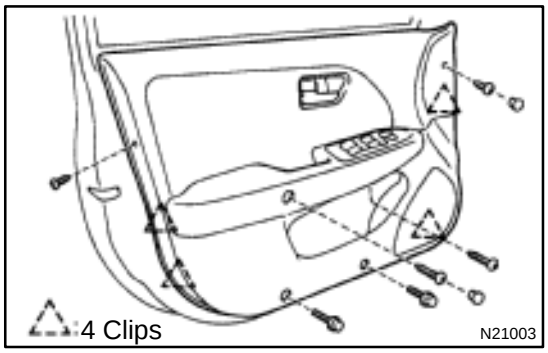

4. REMOVE DOOR TRIM

(a) Using a screwdriver, remove the screw caps.

HINT:

Tape the screwdriver tip before use.

(b) Remove the 2 clips, 2 screws and 2 bolts.

(c) Insert a screwdriver between the door and door trim to pry out.

(d) Pull the trim upward to remove it, then remove the power window switch and disconnect the harness connector.

5. REMOVE THESE PARTS:

(a) Outside rear view mirror

Torque: 5.5 N·m (55 kgf·cm, 49 in.·lbf)

(b) Speaker

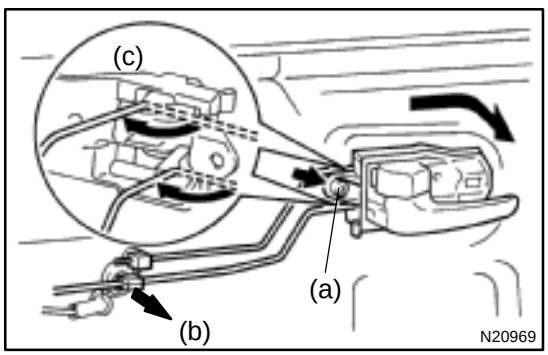

6. REMOVE DOOR INSIDE HANDLE

(a) Remove the screw and pull the handle forward.

Torque: 3.5 N·m (35 kgf·cm, 31 in.·lbf)

(b) Remove the link from the clamp.

(c) Remove the inside handle from the ends of the 2 links.

7. REMOVE SERVICE HOLE COVER

Remove the grommet, then remove the service hole cover.

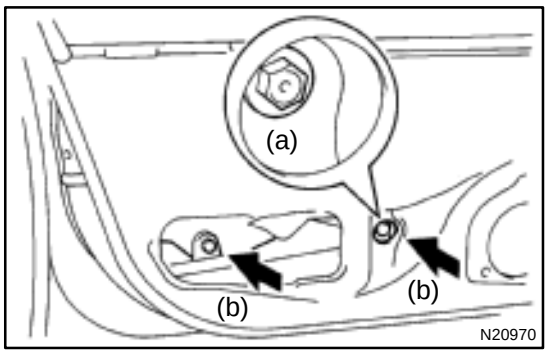

8. REMOVE DOOR GLASS

(a) Open the door glass until the bolt appears in the service hole.

(b) Remove the 2 bolts and the door glass.

HINT:

Pull the glass upward.

Torque: 8.0 N·m (80 kgf·cm, 71 in.·lbf)

9. REMOVE GLASS RUN

HINT:

Pull the glass run upward.

10. REMOVE FRONT AND REAR SIDE FRAMES

Remove the 2 bolts, 2 nuts and the side frames.

HINT:

Remove the side frames through the service hole.

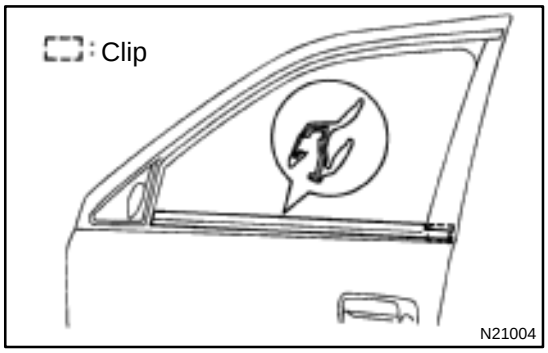

11. REMOVE FRONT DOOR BELT MOULDING

Pry the rearward end of the front door belt moulding from the door and remove the moulding.

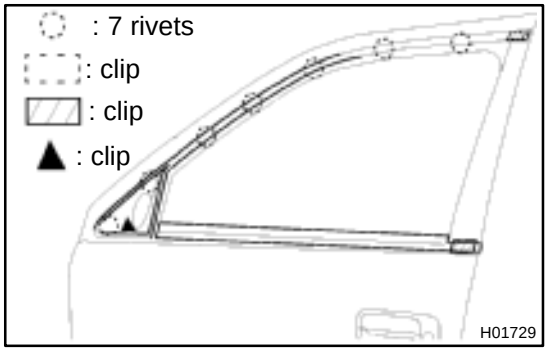

12. REMOVE FRONT DOOR UPPER MOULDING

(a) Using a drill, cut the flange portion of the 7 rivets.

HINT:

At the time of assembly, please refer to the following item.

Use 7 new rivets.

(b) Pry out the 2 clips and remove the moulding.

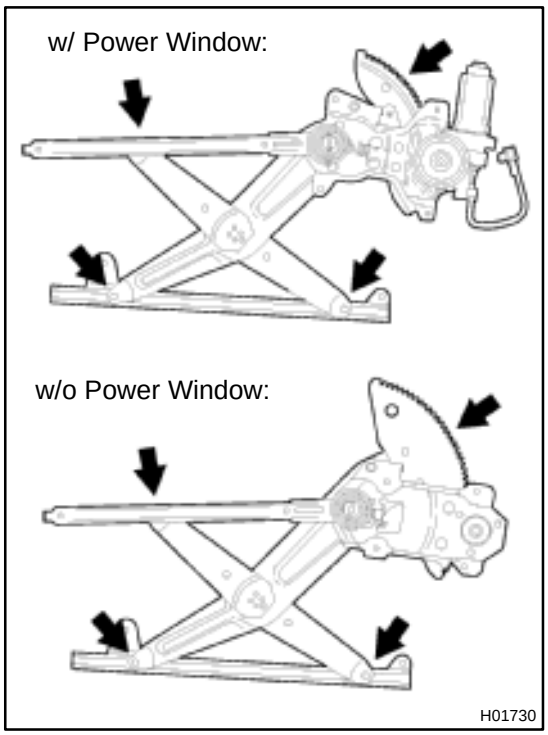

13. REMOVE WINDOW REGULATOR ASSEMBLY

Remove the bolts and window regulator.

Torque: 5.5 N·m (55 kgf·cm, 49 in.·lbf)

HINT:

At the time of reassembly, please refer to the following item.

Apply MP grease to the window regulator rollers.

14. w/ Power Window:

REMOVE MOTOR FROM WINDOW REGULATOR

Remove the 3 screws and motor.

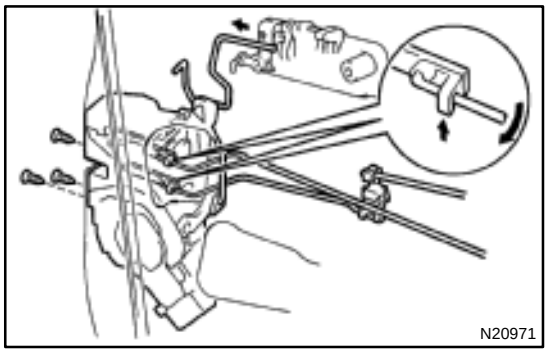

15. REMOVE DOOR LOCK

(a) Remove the 2 clips.

(b) Disconnect the 2 links from the door lock and remove the links.

(c) Disconnect the 2 links from the outside handle and the lock cylinder.

(d) Remove the 3 screws and door lock.

HINT:

At the time of reassembly, please refer to the following item.

Apply adhesive to 3 screws.

Part No. 08833–00070, THREE BOND 1324 or equivalent

Torque: 5.0 N·m (50 kgf·cm, 43 in.·lbf)

(e) w/ Power Door Lock:
Disconnect the connector.

(f) Remove the door lock through the service hole.

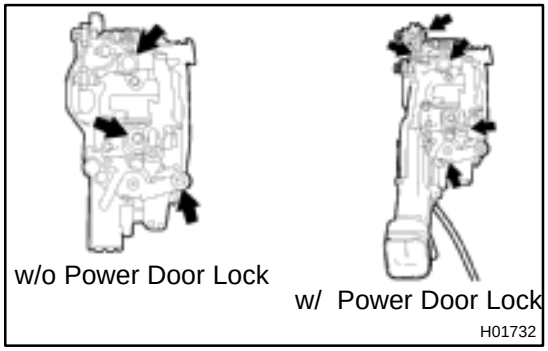

HINT:

At the time of reassembly, please refer to the following item.

Apply MP grease to the sliding surface of the door lock.

16. REMOVE OUTSIDE HANDLE

Torque: 7.0 N·m (70 kgf·cm, 61 in.·lbf)

BO0L4–01

ADJUSTMENT

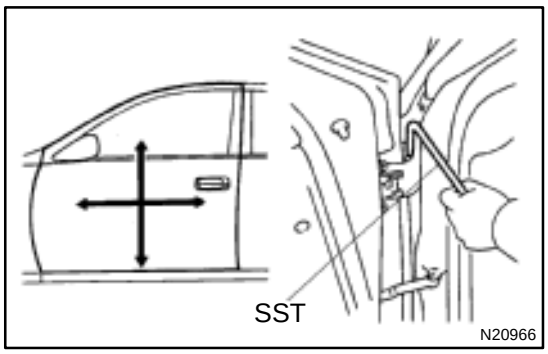

1. ADJUST DOOR IN FORWARD/REARWARD AND VERTICAL DIRECTIONS

Using SST, adjust the door by loosening the body side hinge bolts.

SST 09812–00020

Torque: 31 N·m (310 kgf·cm, 22 ft·lbf)

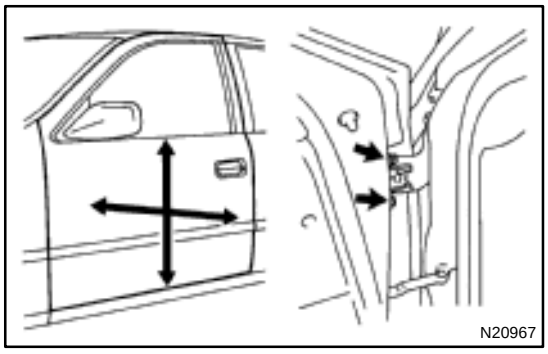

2. ADJUST DOOR IN LEFT/RIGHT AND VERTICAL DIRECTIONS

To adjust, loosen the door side hinge.

HINT:

Substitute the bolt and washer for the centering bolt.

Torque: 26 N·m (260 kgf·cm, 19 ft·lbf)

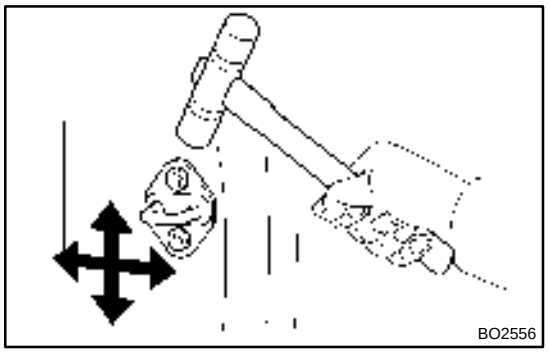

3. ADJUST DOOR LOCK STRIKER

(a) Check that door fits and the door lock linkages are adjusted correctly.

(b) Loosen the striker mounting screws to adjust.

(c) Using a plastic hammer, tap the striker to adjust it.

Torque: 23 N·m (230 kgf·cm, 17 ft·lbf)

BO0L5–01

REASSEMBLY

Reassembly is in the reverse order of disassembly (See page BO–12).

REAR DOOR

COMPONENTS

BO0L6–01

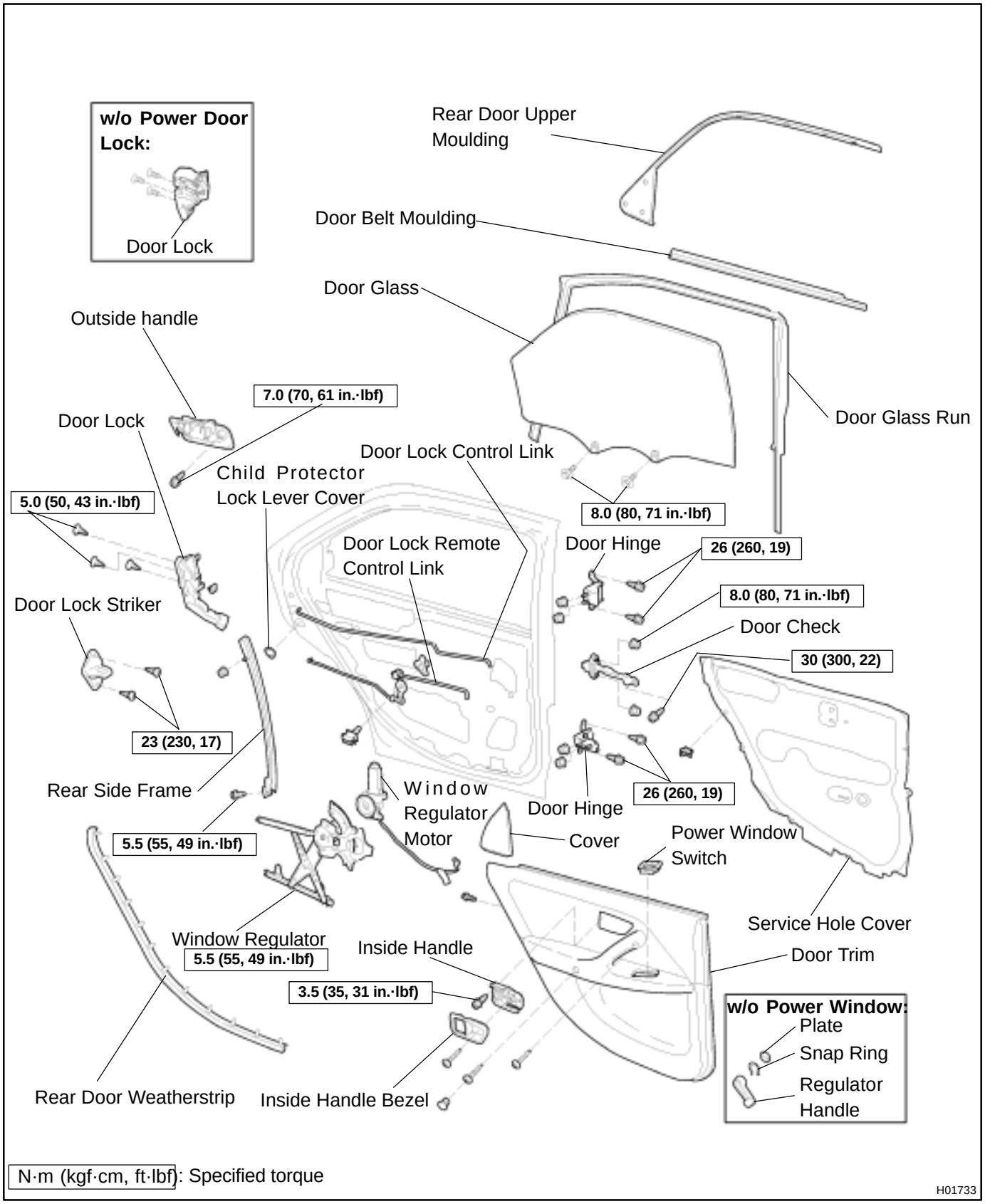

N·m (kgf·cm, ft·lbf): Specified torque

H01733

BO0L8–01

DISASSEMBLY

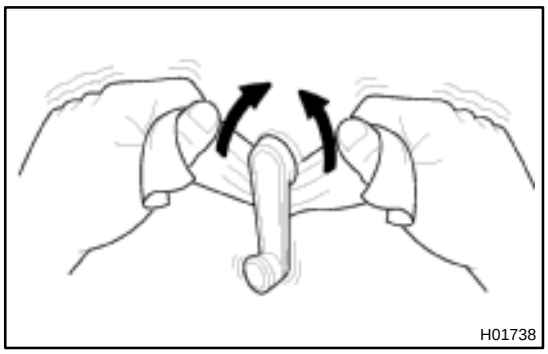

1. w/o Power Window:

REMOVE REGULATOR HANDLE

Pull off the snap ring with a shop rag and remove the regulator handle and plate.

HINT:

At the time of reassembly, please refer to the following item.

With the door window fully closed, install the plate and the regulator handle with the snap ring.

2. w/ Power Window:

REMOVE POWER WINDOW SWITCH

Using a screwdriver, pry out the switch, then disconnect the connector.

HINT:

Tape the screwdriver tip before use.

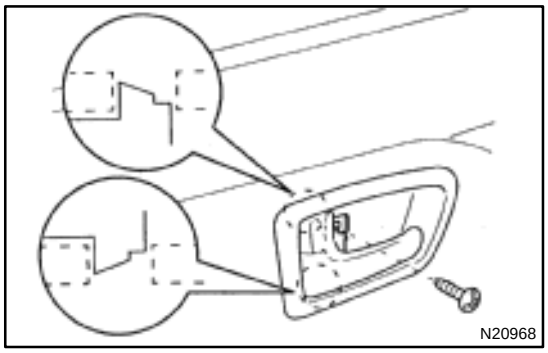

3. REMOVE INSIDE HANDLE BEZEL

(a) Using a screwdriver, pry open the screw cover and remove the screw.

HINT:

Tape the screwdriver tip before use.

(b) Using a screwdriver, pry out the bezel.

HINT:

Tape the screwdriver tip before using. Use the screwdriver to release the bezel from the top and bottom protrusions on the handle assembly as shown.

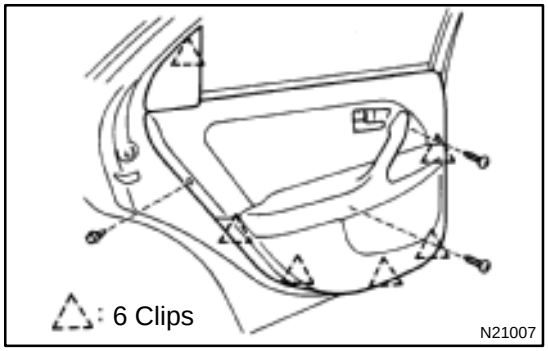

4. REMOVE DOOR TRIM

HINT:

Tape a screwdriver tip before use.

(a) Using the screwdriver, remove the 2 screw caps.

(b) Remove the inside cover.

(c) Remove the 2 screws and clip.

(d) Insert the screwdriver between the door and door trim to pry out.

(e) Pull the trim upward to remove it, then disconnect the connector.

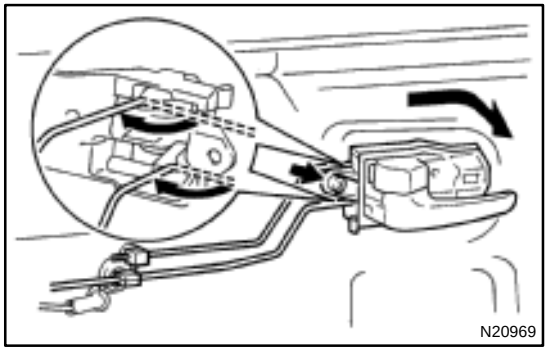

5. REMOVE DOOR INSIDE HANDLE

(a) Remove the screw and pull the handle forward.

Torque: 3.5 N·m (35 kgf·cm, 31 in.·lbf)

(b) Remove the link from the clamp.

(c) Remove the inside handle from the ends of the 2 links.

6. REMOVE SERVICE HOLE COVER

Remove the grommet, then remove the service hole cover.

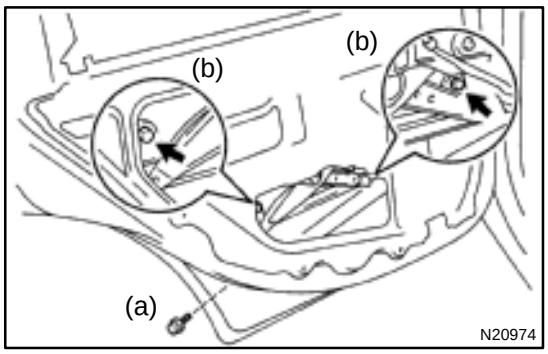

7. REMOVE DOOR GLASS AND RUN

(a) Remove the bolt and nut holding the rear side frame to the door.

(b) Remove the 2 bolts holding the door glass to the window regulator.

Torque: 8.0 N·m (80 kgf·cm, 71 in.·lbf)

(c) Remove the rear side frame and the rear section of the door glass run.

Torque: 5.5 N·m (55 kgf·cm, 49 in.·lbf)

HINT:

Pull the door glass run upward.

(d) Remove the door glass.

(e) Remove the entire door glass run.

HINT:

Pull the door glass run upward.

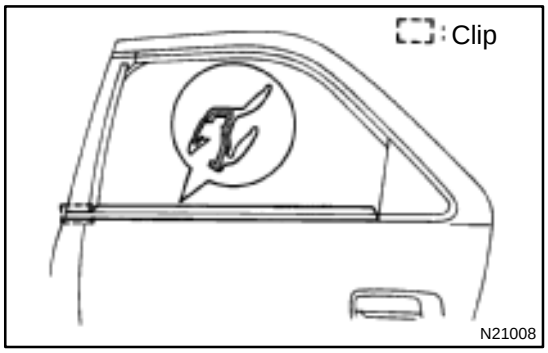

8. REMOVE REAR DOOR BELT MOULDING

Pry the rearward end of the rear door belt moulding from the door and remove the moulding.

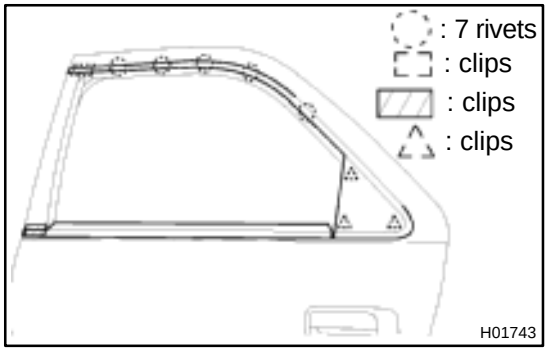

9. REMOVE REAR DOOR UPPER MOULDING

(a) Using a drill, cut the flange portion of the 5 rivets.

HINT:

Use 5 new rivets.

(b) Insert a screwdriver between the door and the rear door upper moulding and pry it off.

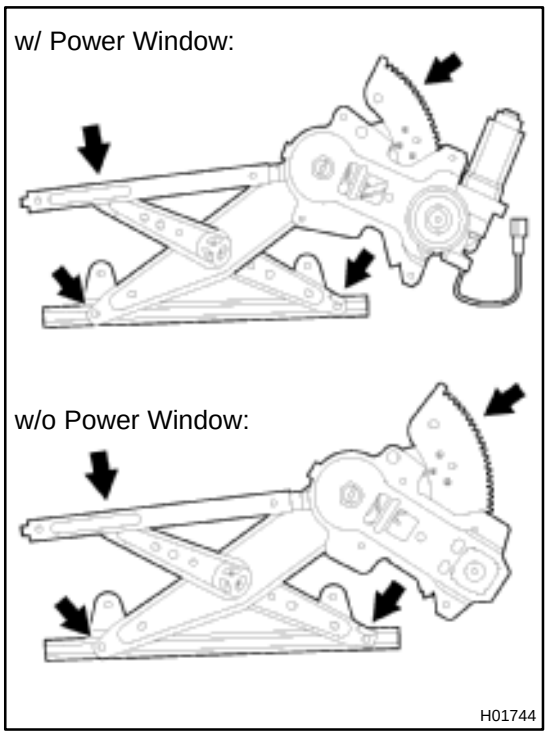

10. REMOVE WINDOW REGULATOR ASSEMBLY

Remove the bolts and window regulator assembly.

Torque: 5.5 N·m (55 kgf·cm,49 in.·lbf)

HINT:

At the time of reassembly, please refer to the following item.

Apply MP grease to the window regulator rollers.

11. w/ Power Window:
REMOVE MOTOR FROM WINDOW REGULATOR

Remove the 3 screws and motor.

12. REMOVE REAR DOOR LOCK CHILD PROTECTION COVER

Using a screwdriver, pry out the cover.

HINT:

Tape the screwdriver tip before use.

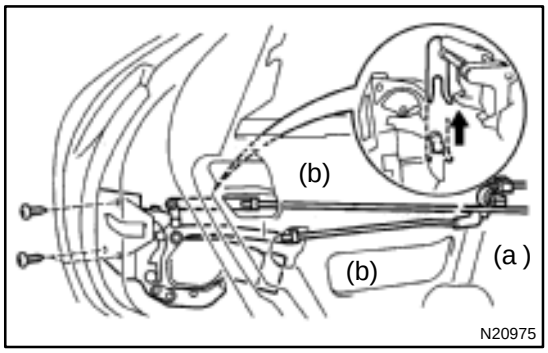

13. REMOVE DOOR LOCK

(a) Remove the clip.

(b) Disconnect the 2 links from the door lock and remove the 2 links.

(c) Disconnect the link from the outside handle.

(d) Remove the 3 screws.

Torque: 5.0 N·m (50 kgf·cm, 43 in.·lbf)

HINT:

At the time of reassembly, please refer to the following item.

Apply adhesive to the 3 screws.

Part No. 08833–00070, THREE BOND 1324 or equivalent

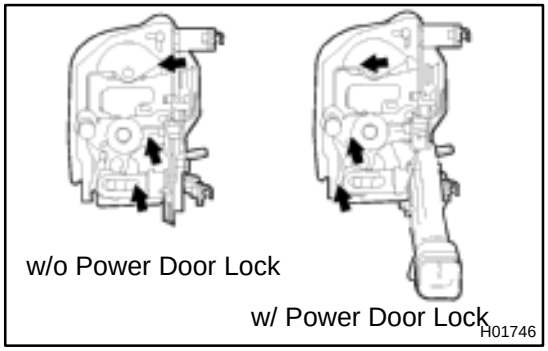

(e) w/ Power Door Lock:
Disconnect the connector.

(f) Remove the door lock through the service hole.

HINT:

At the time of reassembly, please refer to the following item.

Apply MP grease to the sliding surface of the door lock.

14. REMOVE OUTSIDE HANDLE

Torque: 7.0 N·m (70 kgf·cm, 61 in.·lbf)

BO0L7–01

ADJUSTMENT

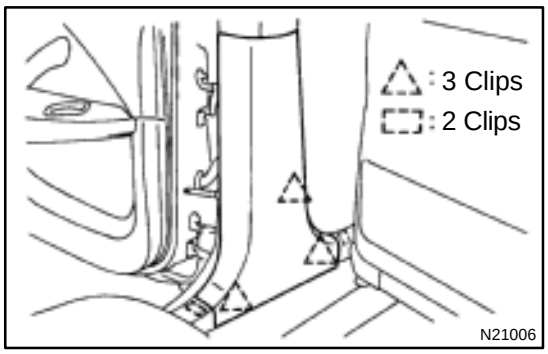

1. ADJUST DOOR IN FORWARD/REARWARD AND VERTICAL DIRECTION

(a) Remove the front part of the rear seat side garnish.
(b) Remove the rear part of the front door inside scuff plate.
(c) Remove the center pillar lower garnish.

HINT:

Pull both sides of the top and bottom part of the garnish outward, then pull out to remove the garnish.

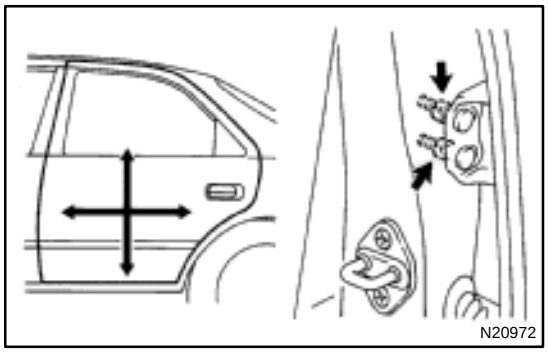

(d) Loosen the body side hinge nuts to adjust.
Torque: 26 N·m (260 kgf·cm, 19 ft·lbf)
(e) Install center pillar lower garnish.
(f) Install front door inside scuff plate.
(g) Install rear seat side garnish.

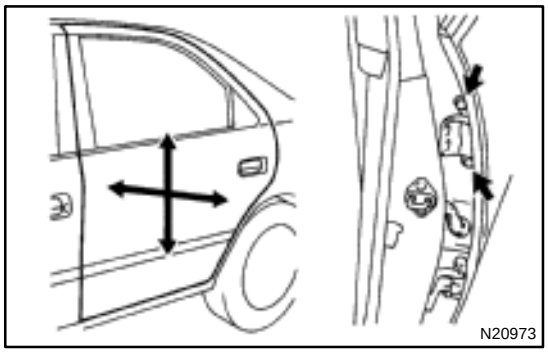

2. ADJUST DOOR IN LEFT/RIGHT AND VERTICAL DIRECTIONS

Loosen the door side hinge bolts to adjust.

HINT:

Substitute a bolt with washer for the centering bolt.

Torque: 26 N·m (260 kgf·cm, 19 ft·lbf)

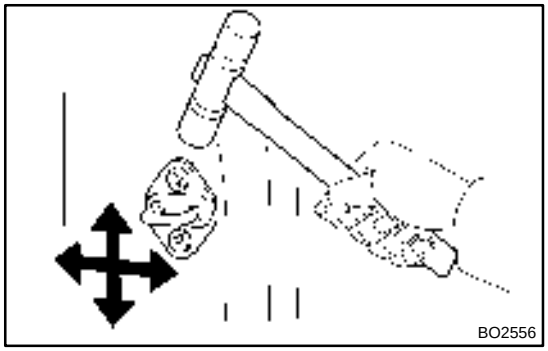

3. ADJUST DOOR LOCK STRIKER

(a) Check that the door fit and door lock linkages are adjusted correctly.
(b) Loosen the striker mounting screws to adjust.
Torque: 23 N·m (230 kgf·cm, 17 ft·lbf)
(c) Using a plastic hammer, tap the striker to adjust it.

BO0L9–01

REASSEMBLY

Reassembly is in the reverse order of disassembly (See page BO–18).

OUTSIDE REAR VIEW MIRROR

COMPONENTS

BO0LA–01

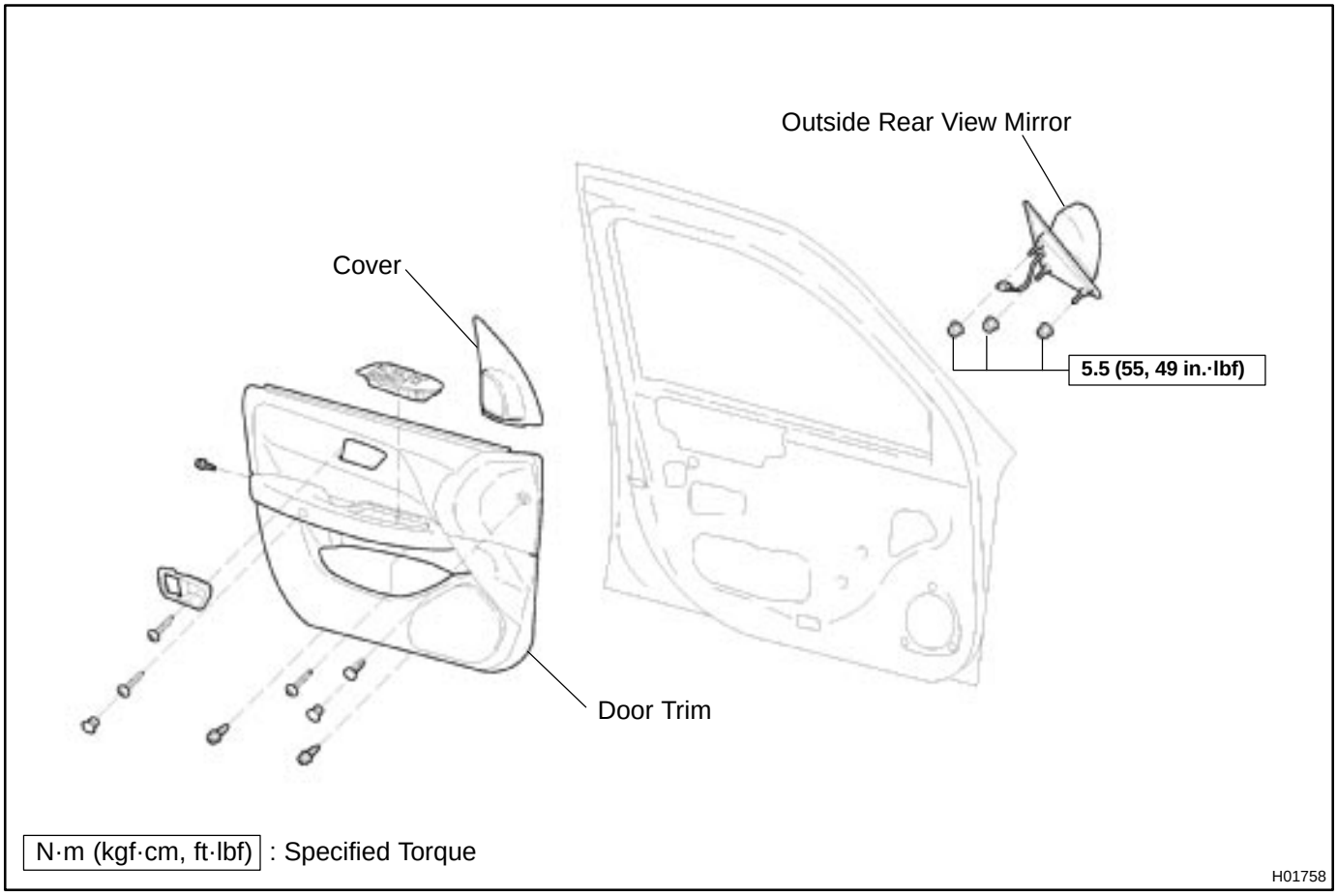

BO0LB–01

DISASSEMBLY

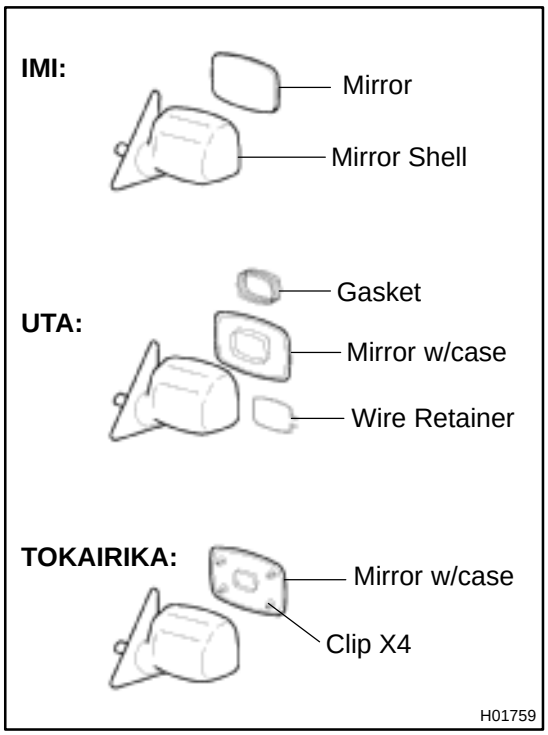

1. IDENTIFY OUTSIDE REAR VIEW MIRROR

(a) w/ Power Rear View Mirror:
UTA:
The mirror moves smoothly when pressing the end of the mirror inward.

(b) w/ Power Rear View Mirror:
IMI:
The mirror stutters when pressing the end of the mirror inward.

(c) w/ Power Rear View Mirror:
TOKAIRIKA:
Equipped only on vehicles manufactured by TMC.

(d) w/o Power Rear View Mirror:
Mirrors manufactured by IMI

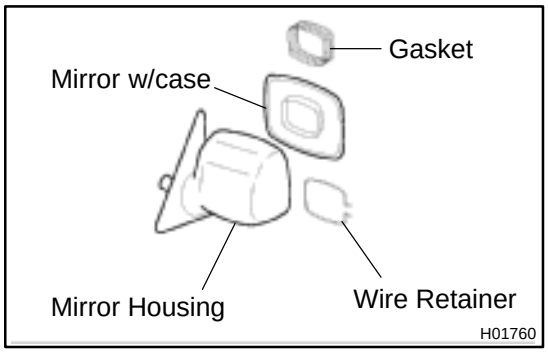

2. UTA:
DISASSEMBLE OUTSIDE REAR VIEW MIRROR

(a) Disconnect the battery.

(b) Press the inboard end of the mirror inward to access the rear of the mirror w/case assembly.

(c) Unlatch both ends of the wire retainer, then remove the mirror parts from the mirror housing.

NOTICE:
Be careful not to damage the wires on heated mirrors. Disconnect the wires from the back side of the heater.

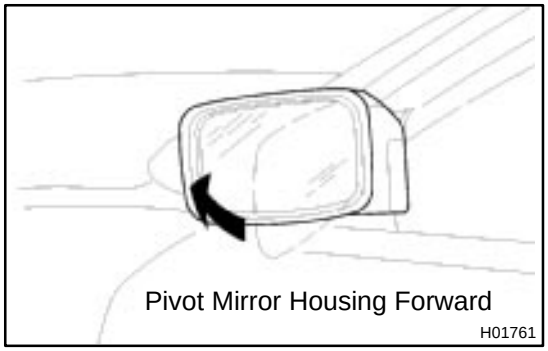

3. IMI:
DISASSEMBLE OUTSIDE REAR VIEW MIRROR

(a) w/Heated Mirrors:
Disconnect the battery.

(b) Protect the door surface.

(c) Pivot the mirror housing to the forward position.

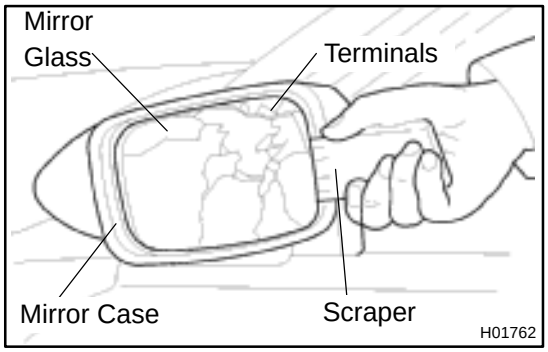

(d) Insert a scraper between the mirror and the case to remove the mirror.

NOTICE:
Be careful not to damage the wires on heated mirrors. Disconnect the wires from the back side of the heater.

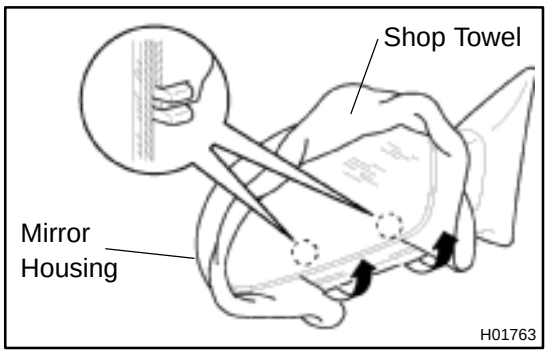

4. TOKAIRIKA:
DISASSEMBLE OUTSIDE REAR VIEW MIRROR

(a) Disconnect the battery.
(b) Slide a shop towel between the mirror and the mirror housing as shown.
(c) Pull the ends of the shop towel upward to disconnect the mirror from the housing.
(d) Pull the mirror upward and disconnect it.

NOTICE:
Be careful not to damage the wires on heated mirrors. Disconnect the wires from the back side of the heater.

BO0LC–01

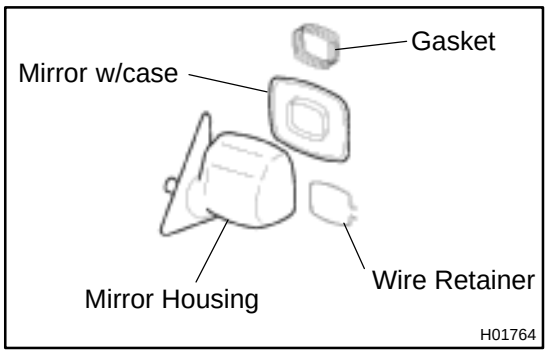

REASSEMBLY

1. UTA:

ASSEMBLE OUTSIDE REAR VIEW MIRROR

(a) w/Heated Mirrors:
Connect the heater wires.

(b) Install the wire retainer onto the mirror w/case assembly, then press the mirror firmly into place to engage the 6 lugs of the wire retainer.

NOTICE:

Pull the mirror edges to confirm the wire retainer lugs completely engage with the mirror housing.

(c) Reconnect the battery, then operate the mirror to its full stop position.

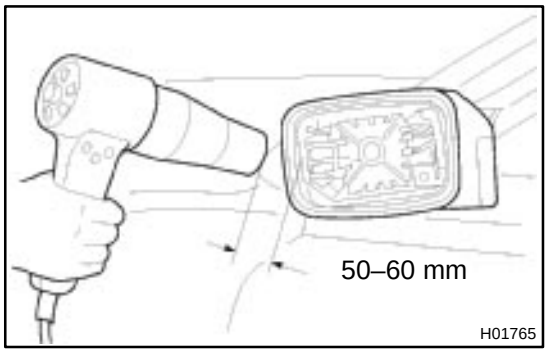

2. IMI:

ASSEMBLE OUTSIDE REAR VIEW MIRROR

(a) From a distance of 50–60 mm, use a heat gun or hair dryer to heat the edge of the mirror case until the mirror case becomes soft.

CAUTION:

Use extreme caution when using a heat gun or hair dryer. Holding it too close can melt the mirror case.

(b) w/ Heated Mirrors:
Connect the heater wires.

(c) Before the the case cools down, position and snap the new mirror glass into the case.

NOTICE:

Verify the glass case edge completely surrounds the mirror glass.

(d) Allow the case to cool down before moving the mirror back to its operating position.

(e) Recheck the fit between the glass and the case.

(f) Reconnect the battery, then operate the mirror to its full stop position.

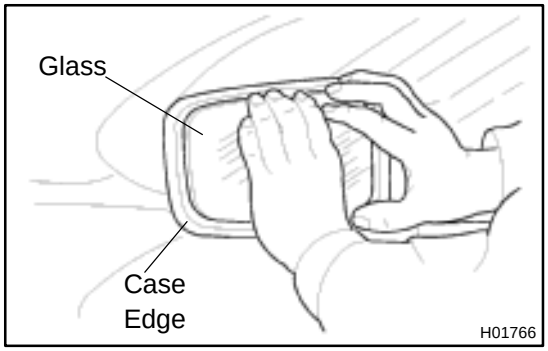

3. TOKAIRIKA:

ASSEMBLE OUTSIDE REAR VIEW MIRROR

(a) w/ Heated Mirrors:
Connect the heater wires.

(b) Connect the claws (A) and install the mirror into the mirror housing.

(c) Push the mirror inward to connect the claws (B) onto the mirror housing.

(d) Reconnect the battery, then operate the mirror to its full stop position.

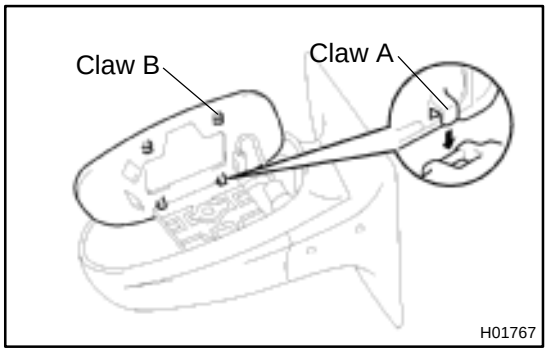

LUGGAGE COMPARTMENT DOOR AND HINGE

BO0LD–01

COMPONENTS

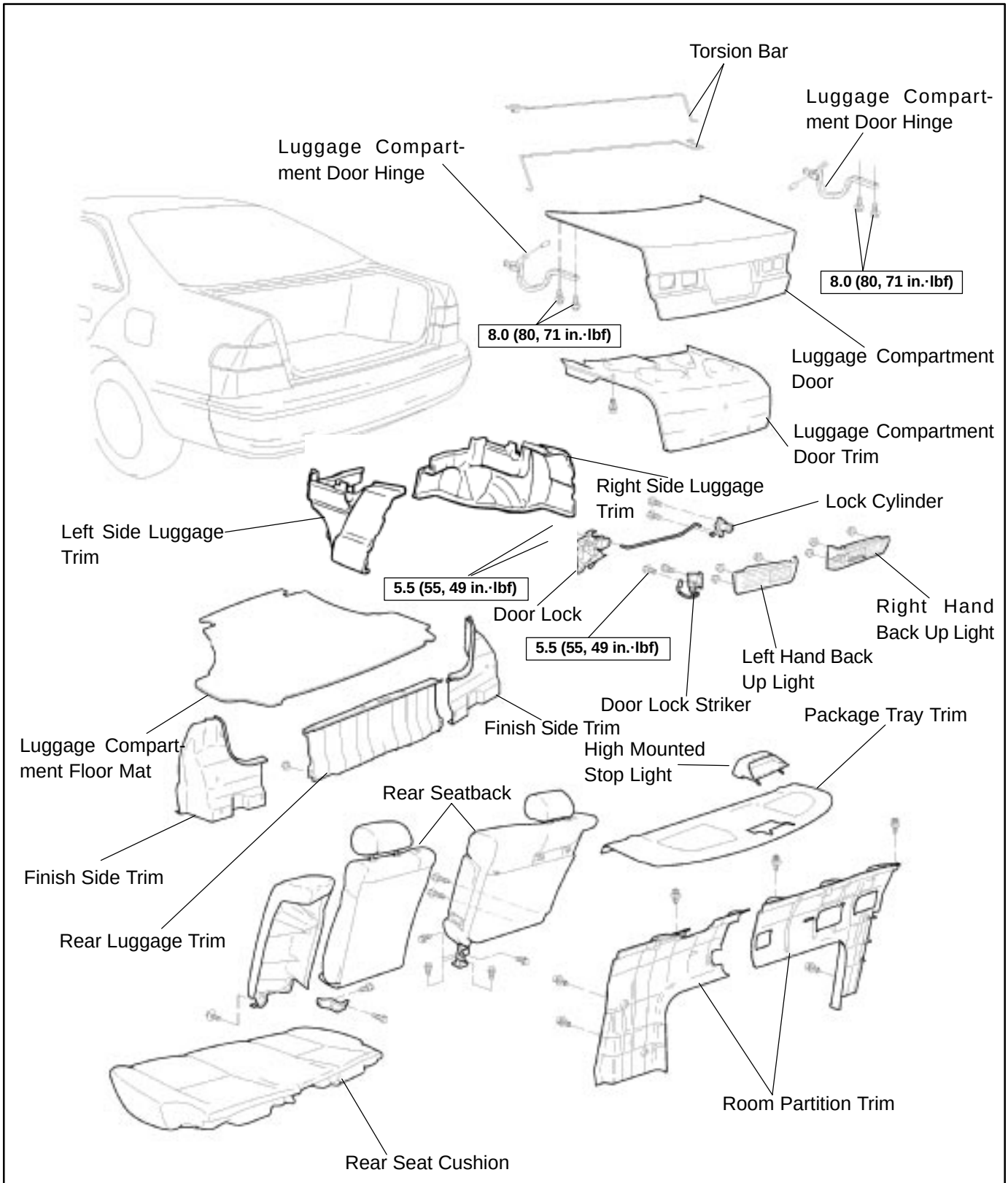

N·m (kgf·cm, ft·lbf): Specified torque

H01747

BO0LE–01

REMOVAL

1. REMOVE LUGGAGE COMPARTMENT DOOR TRIM

2. REMOVE LUGGAGE COMPARTMENT DOOR

(a) Disconnect the connector.

(b) Using a clip remover, disconnect the clamps.

(c) Remove the 4 bolts and door.

Torque: 8.0 N·m (80 kgf·cm, 71 in.·lbf)

3. REMOVE THESE PARTS:

(a) Luggage compartment floor mat

(b) LH and RH rear floor finish side plates

(c) Inner cover trims

(d) Rear seat

(e) Room partition trims

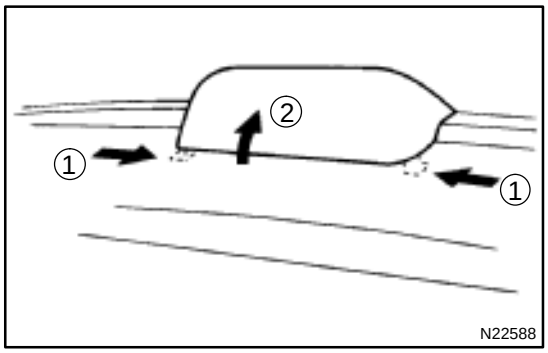

4. REMOVE HIGH–MOUNTED STOP LIGHT

(a) Push on the both side of the cover to release the claws by your hand and remove the cover as shown in the illustration.

(b) Remove the 2 bolts and stop light, then disconnect the connector.

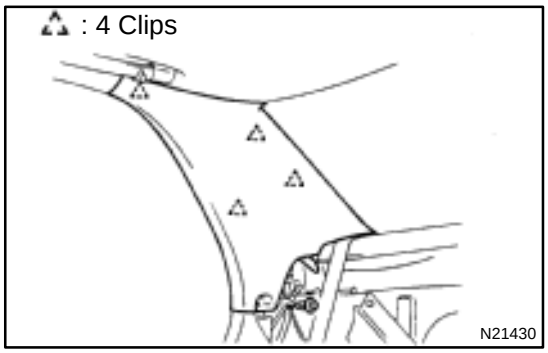

5. REMOVE ROOF SIDE INNER GARNISH

(a) Remove the clip.

(b) Using a screwdriver, pry loose and remove the garnish.

HINT:

Tape the screwdriver tip before use.

6. REMOVE PACKAGE TRAY TRIM

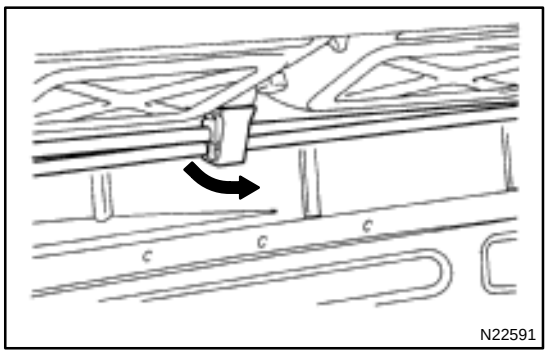

7. REMOVE TORSION BAR

(a) Remove the torsion bar from the center bracket.

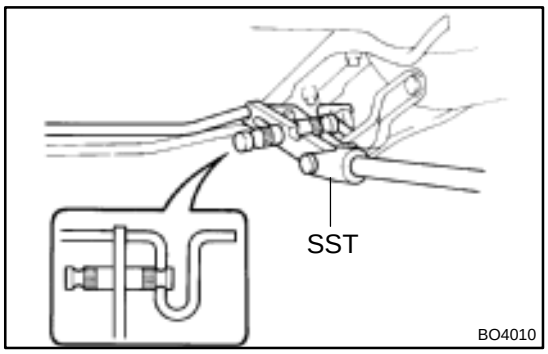

(b) Install SST to the torsion bar on the hinge side.
SST 09804–24010

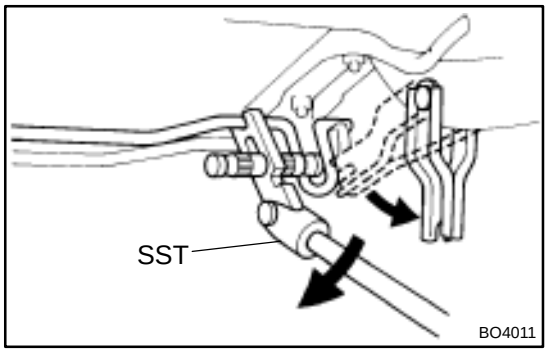

(c) Push down on SST, and pull the luggage compartment door hinge from the torsion bar.

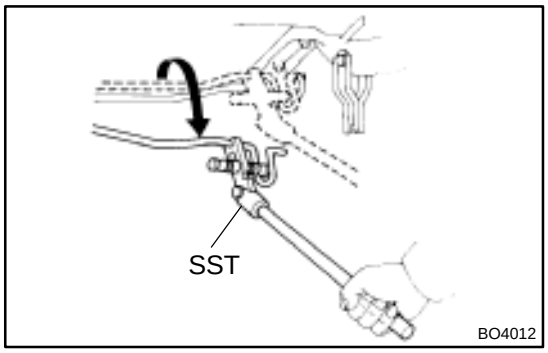

(d) Slowly lift SST, and remove the torsion bar from the torsion bar bracket with SST.
(e) Remove the torsion bar.
(f) Repeat for the other side.

DISASSEMBLY

1. REMOVE DOOR LOCK

(a) Disconnect the control link.

(b) Remove the 2 bolts and lock.

Torque: 5.5 N·m (56 kgf·cm, 49 in.·lbf)

2. REMOVE REAR COMBINATION LIGHT

(a) Disconnect the connector.

(b) Remove the 10 nuts and rear combination lights.

BO0LG–01

ADJUSTMENT

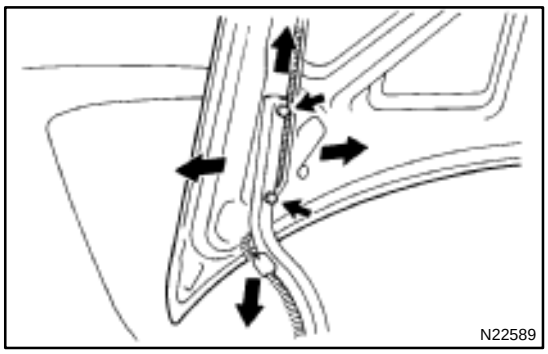

1. ADJUST LUGGAGE COMPARTMENT DOOR

(a) Remove the 11 clips and luggage compartment door trim.

(b) For forward/rearward and left/right adjustments loosen the bolts.

Torque: 8.0 N·m (82 kgf·cm, 71 in.·lbf)

(c) For vertical adjustment of the front end of the door, increase or decrease the number of washers between the hinge and the door.

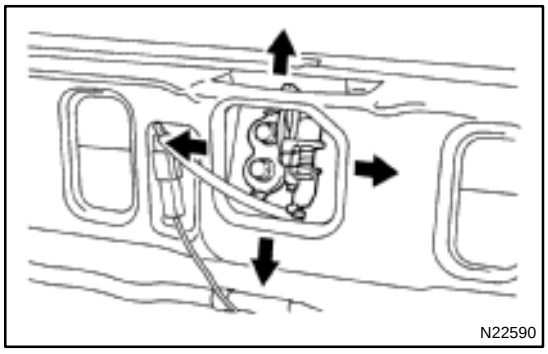

2. ADJUST DOOR LOCK STRIKER

(a) Remove the LH and RH rear floor finish side plates.

(b) Remove the rear floor finish plate.

(c) Loosen the 2 lock striker set bolts.

Torque: 5.5 N·m (56 kgf·cm, 49 in.·lbf)

(d) Using a hammer and a brass bar, tap the striker to adjust it.

REASSEMBLY

Reassembly is in the reverse order of disassembly (See page BO–30).

BO0LI–01

INSTALLATION

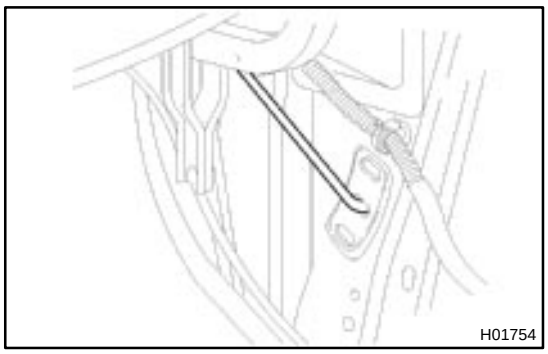
H01754

1. INSTALL TORSION BAR

(a) Insert the torsion bar into the bracket.

HINT:

The center bracket opening is the nominal position of the torsion bar.

If needed, move the torsion bar to the upper or lower hole to provide the correct luggage door lift.

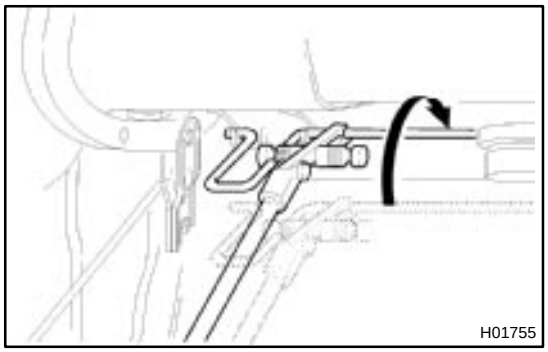
H01755

(b) Install the SST onto the torsion bar of the hinge side.
SST 09804–24010

(c) Slowly lift the torsion bar with the SST and place it in the torsion bar bracket.

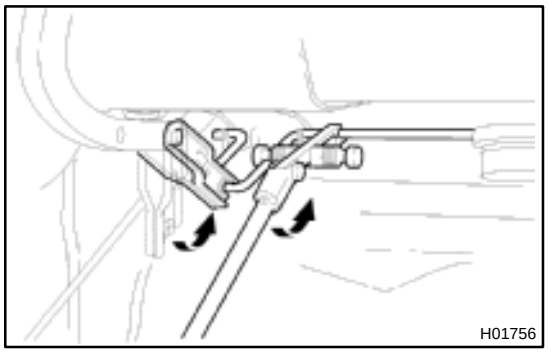
H01756

(d) Slowly push the SST down and install the torsion bar to the hinge.

(e) Slowly lift the SST and install the torsion bar.

(f) Install the torsion bar to the center bracket.

(g) Repeat for the other side.

2. INSTALL PACKAGE TRAY TRIM

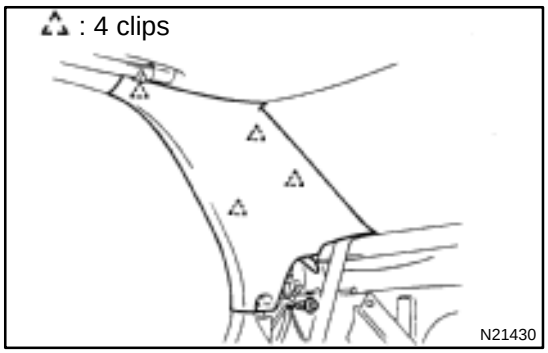

N21430

3. INSTALL ROOF SIDE INNER GARNISH

4. INSTALL HIGH MOUNTED STOP LIGHT

5. INSTALL THESE PARTS:

(a) Room partition trims

(b) Rear seat

(c) Inner cover trims

(d) LH and RH rear floor finish side plates

(e) Luggage compartment floor mat

6. INSTALL LUGGAGE COMPARTMENT DOOR

(a) Install the door with 4 bolts.

(b) Install clamps.

(c) Connect the connector.

7. INSTALL LUGGAGE COMPARTMENT DOOR TRIM

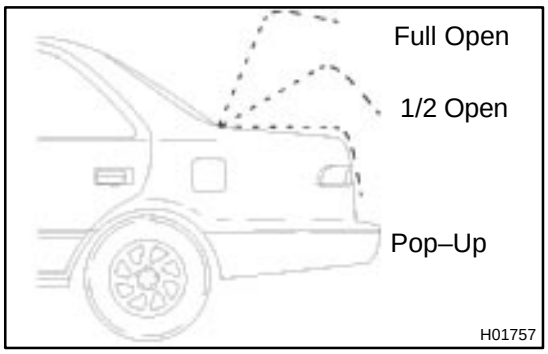

8. CHECK LUGGAGE DOOR LIFT

- Pop–up distance: 35 – 100 mm
- Pop– up to 1/2 open: Door should remain in any position.
- Past 1/2 open: Door should open fully by itself.
- Full open position: Door should not easily fall closed

If adjustment is necessary, refer to step 2 –(a) above.

FRONT WIPER AND WASHER

COMPONENTS

BO0LK–01

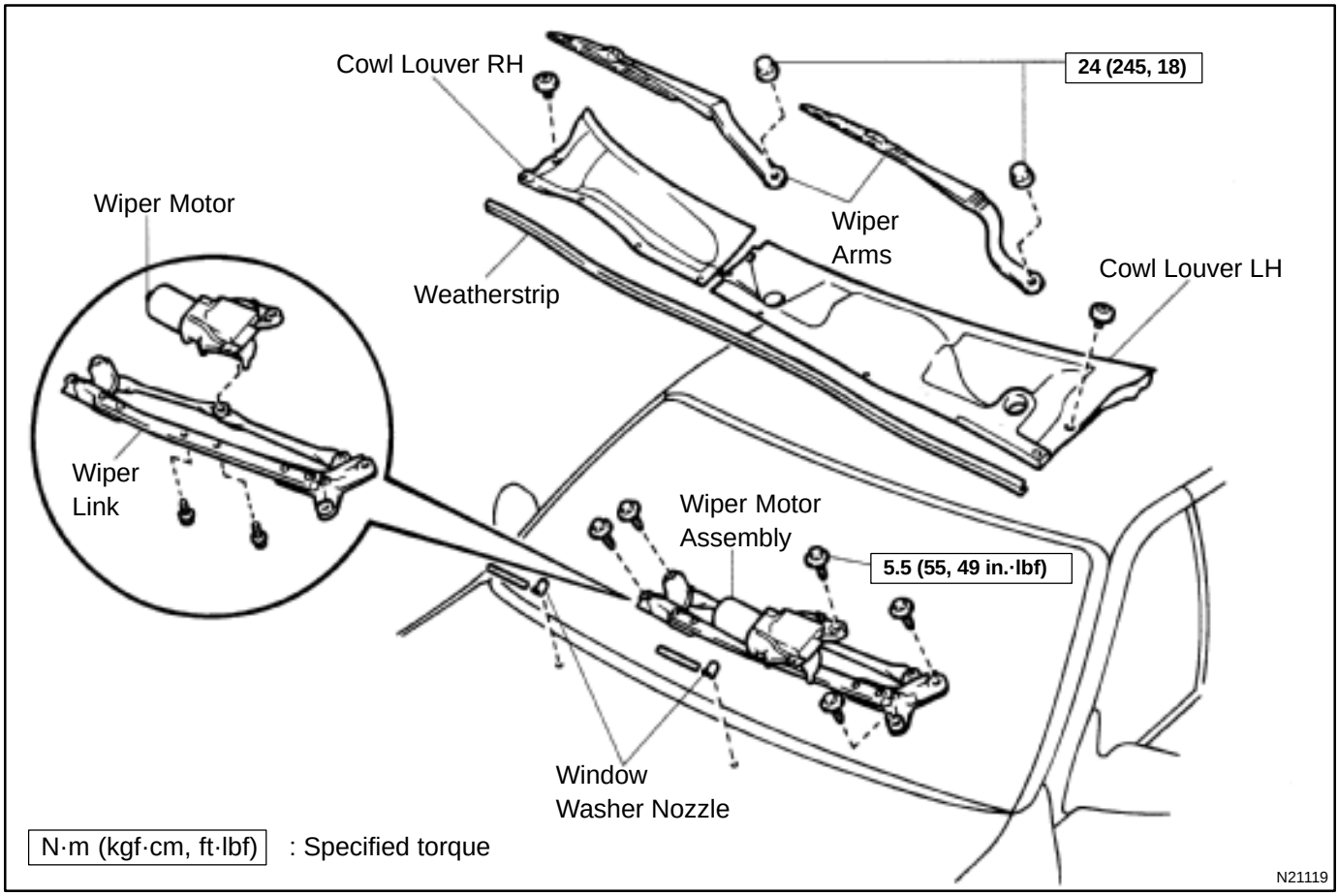

BO0LL–01

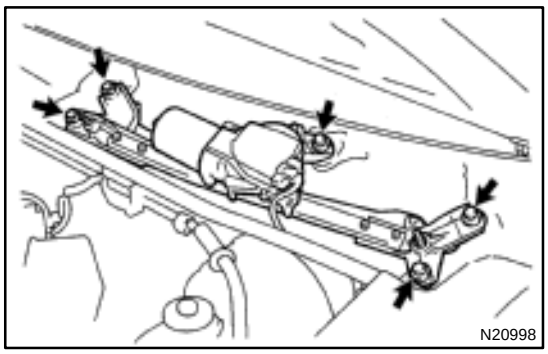

REMOVAL

1. REMOVE WIPER ARMS

2. REMOVE WEATHERSTRIP AND COWL LOUVERS

3. REMOVE WIPER MOTOR ASSEMBLY

(a) Disconnect the connector.

(b) Remove the 5 bolts and wiper motor assembly.

4. REMOVE WIPER MOTOR

Remove the 2 bolts, then separate the motor crank arm from the wiper links at the ball and socket joint.

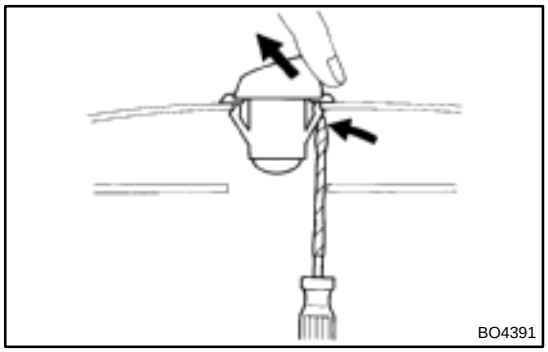

5. REMOVE WINDOW WASHER NOZZLE

(a) Remove the hoses from the nozzles.

(b) Using a screwdriver, remove the nozzle.

HINT:

Tape the screwdriver tip before use.

BO0LM–01

ADJUSTMENT

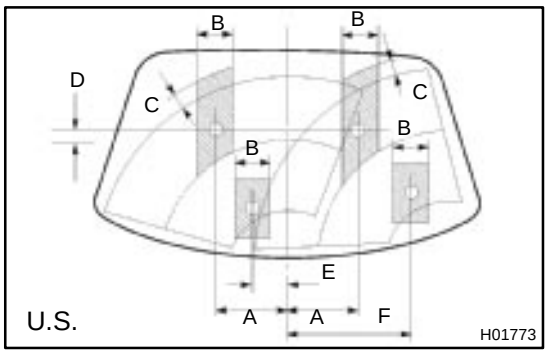

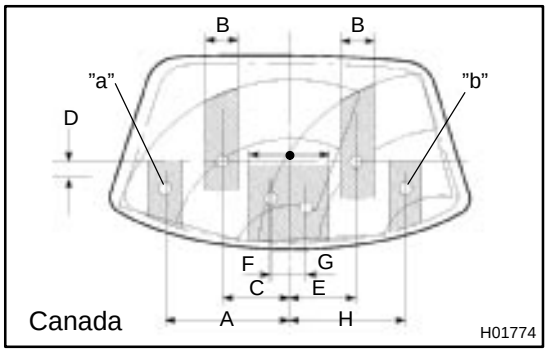

1. INSPECT WASHER NOZZLE

(a) While operating the washer, check that the washer fluid hits the windshield and the upsurge area within the shaded areas.

	U.S. mm (in.)	Canada mm (in.), Approx.
"A"	280 (11)	600 (23.6)
"B"	150 (5.9)	150 (5.9)
"C"	50 (2.0)	250 (9.8)
"D"	50 (2.0) Max	
"E"	180 (7.1)	360 (14)
"F"	395 (15.5)	114 (4.5)
"G"	—	90 (3.5)
"H"	—	474 (18.7)
"I"	—	350 (13.8)

(b) Canadian models:
Adust the nozzle so the outboard points "a" and "b" are within the wipe pattern.

(c) Check if the lower point where the washer fluid hits the windshield is within the range of the wiping pattern (the area of the glass the wiper blades wipe).

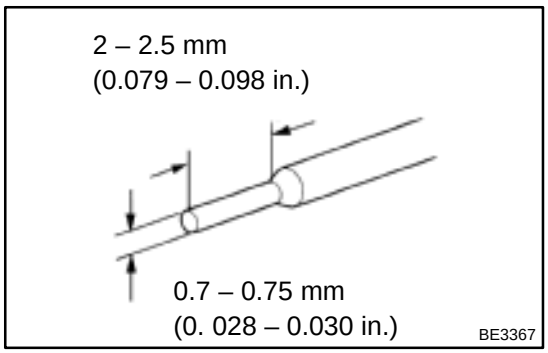

2. ADJUST WASHER NOZZLE

Using a tool like that shown in the illustration, rotate the nozzle to adjust the fluid direction against the windshield.

BO0LN–01

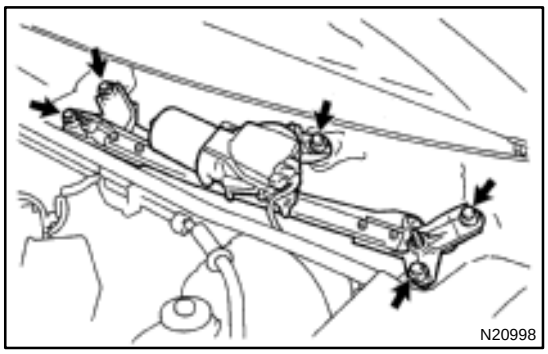

INSTALLATION

1. INSTALL WINDOW WASHER NOZZLE

2. INSTALL WIPER LINK TO MOTOR

3. INSTALL THESE PARTS:

(a) Wiper motor assembly
Torque: 5.5 N·m (55 kgf·cm, 49 in.·lbf)

(b) Cowl louvers and weatherstrip

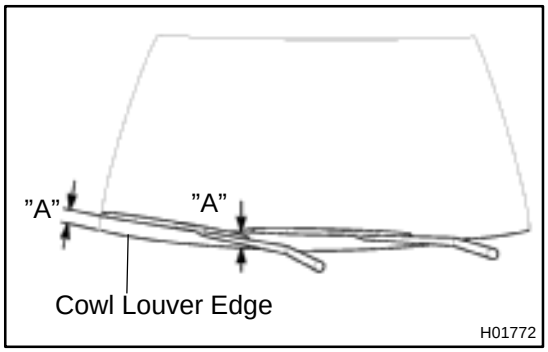

4. INSTALL WIPER ARMS

(a) Operate the wipers once and turn the wiper switch OFF, then install the wiper arms.

HINT:

If the driver’s side wiper arm mount has a blue dot on it, use an ITT wiper arm. If there is no mark, use a ND wiper arm.

(b) Adjust the installation position of the wiper arms as shown (blade tip to cowl louver edge).
”A” Approx. 35 mm (1.4 in.)

(c) Tighten the wiper arm nut.
Torque: 24 N·m (245 kgf·cm, 18 ft·lbf)

BODY OUTSIDE MOULDING

COMPONENTS

BO0M8–01

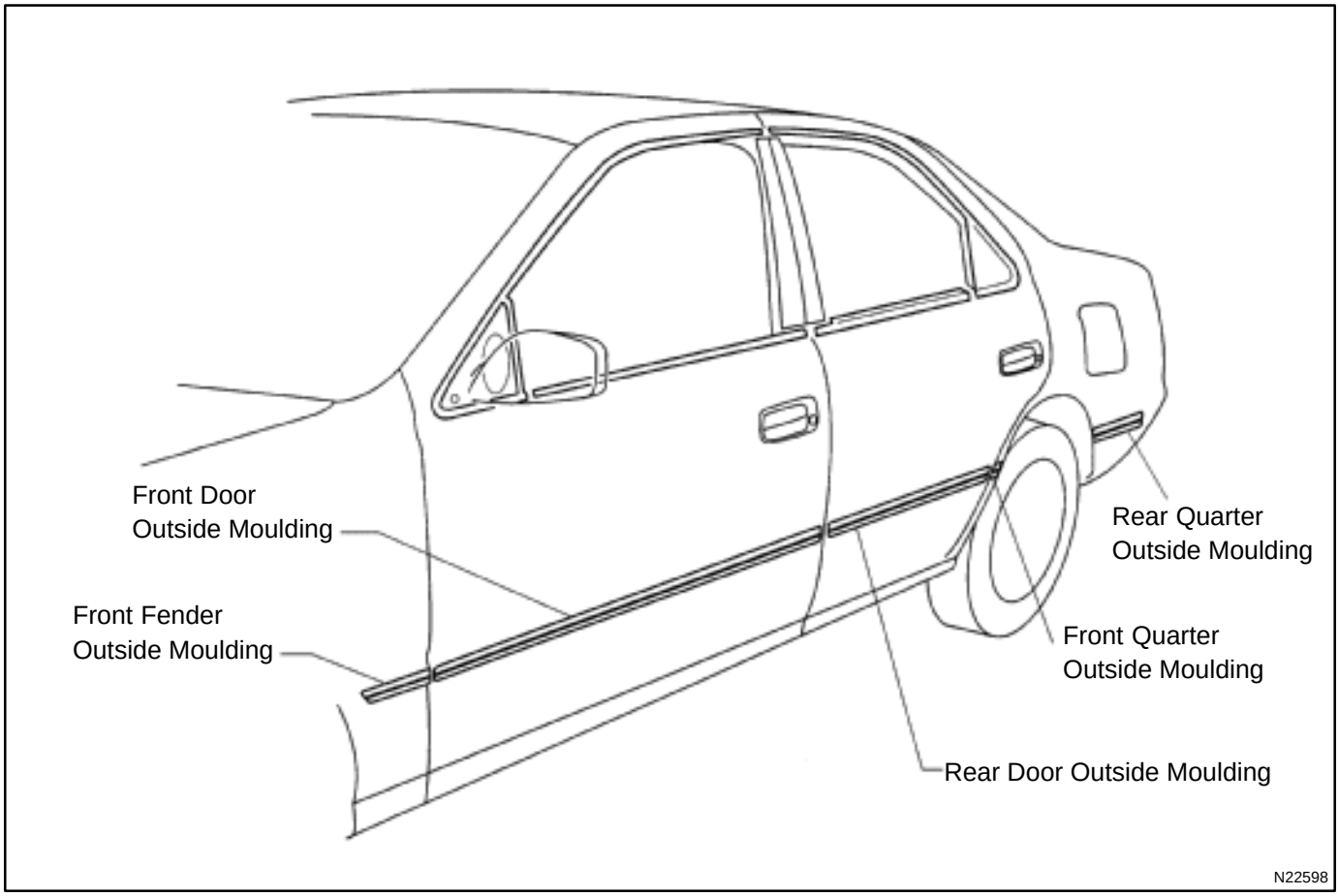

BO0M9–01

REMOVAL

CAUTION:

- **Store in a cool place, avoiding direct sunlight, high temperature and dust.**
- **The moulding is made of polyvinyl chloride. Do not allow this material to come in contact with thinner or other solvents, open flame or boiling water.**
- **The storage time for the moulding and adhesive is limited to about 9 months.**

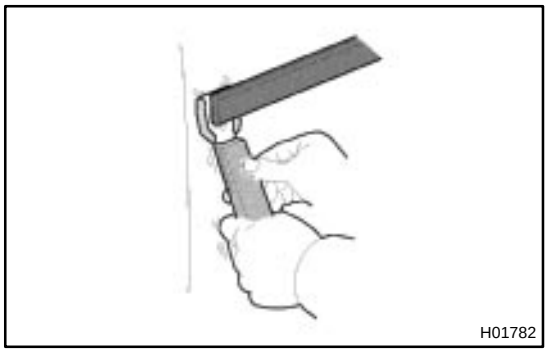

1. REMOVE ENDS OF MOULDING

Using a scraper, pry the moulding loose about 30 mm (1.18 in.) form each end.

HINT:

Tape the scraper tip before using.

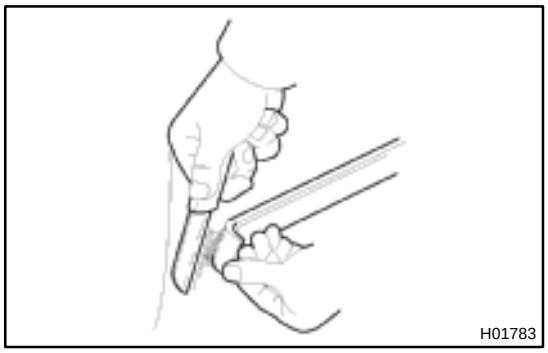

2. REMOVE MOULDING AND ADHESIVE

(a) Pull off the moulding by cutting the adhesive with a knife.

(b) Scrape off adhesive from the body with sandpaper cutter.

NOTICE:

- **Remember that 30 – 80 mm (1.18 – 3.15 in.) of the ends of the moulding are glued tightly with a strong adhesive.**
- **Do not reuse moulding.**

BO0MA–01

INSTALLATION

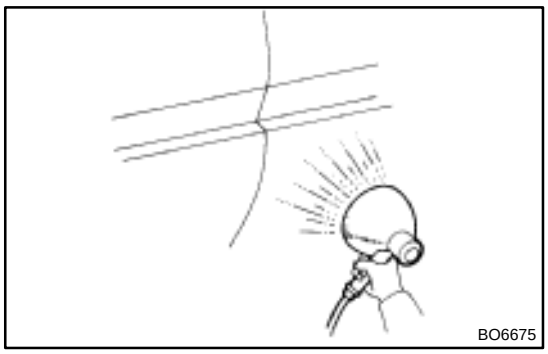
BO6675

1. HEAT BODY MOUNTING SURFACE

(a) Using a heat light, heat the body mounting surface to 40 – 60 ˚C (104 – 140 ˚F).

NOTICE:

Do not heat body excessively.

(b) Remove the adhesive tape from the body.

(c) Wipe off stains with cleaner.

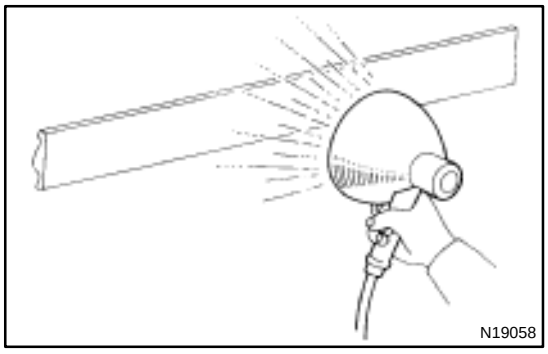
N19058

2. CLEAN MOULDING

If reusing the moulding:

(a) Using a heat light, heat the moulding to 20 – 30 ˚C (68 – 86 ˚F).

NOTICE:

Do not heat moulding excessively.

(b) Remove the adhesive tape from the moulding.

(c) Wipe off stains with cleaner.

(d) Apply a new adhesive tape to moulding as shown in the illustration.

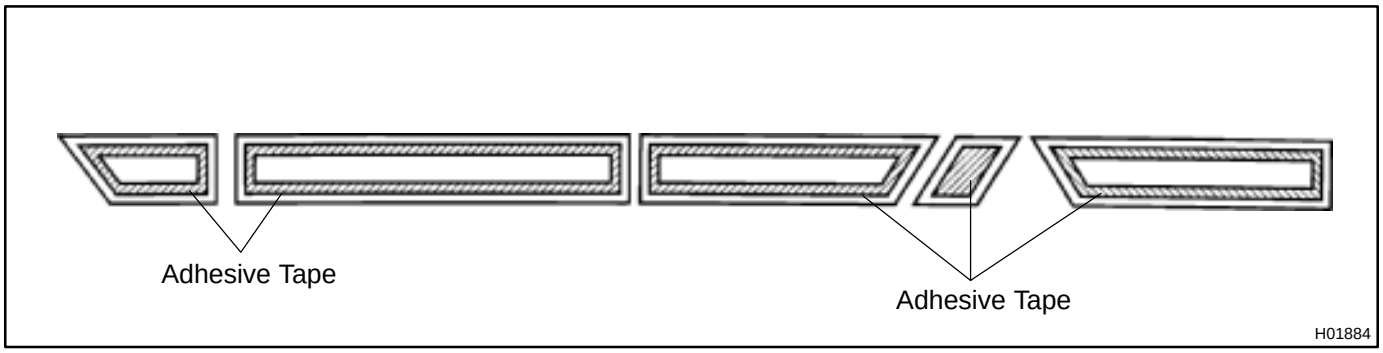

H01884

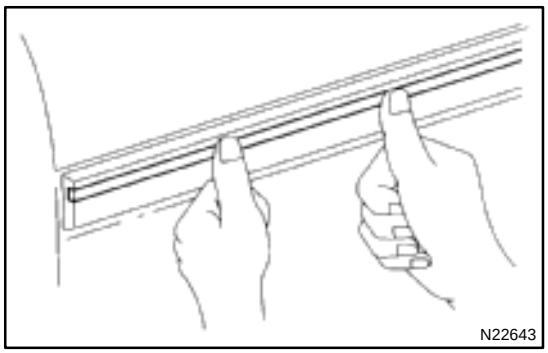
N22643

3. INSTALL MOULDING

(a) Using a heat light, heat the body and moulding.
Body: 40 – 60 ˚C (104 – 140 ˚F)
Moulding: 20 – 30 ˚C (68 – 86 ˚F)

NOTICE:

Do not heat moulding excessively.

(b) Lift moulding release sheet from face of moulding.

NOTICE:

When the moulding release sheet is removed, make sure that no dirt or dust can get onto the uncoated area.

(c) Align the bosses with their corresponding holes in the body, and press firmly on the moulding. Refer to the illustration for the front fender moulding application procedures.

NOTICE:

Do not apply excessive force onto the moulding, but steady pressure with your thumbs.

WINDSHIELD

COMPONENTS

BO0LO–01

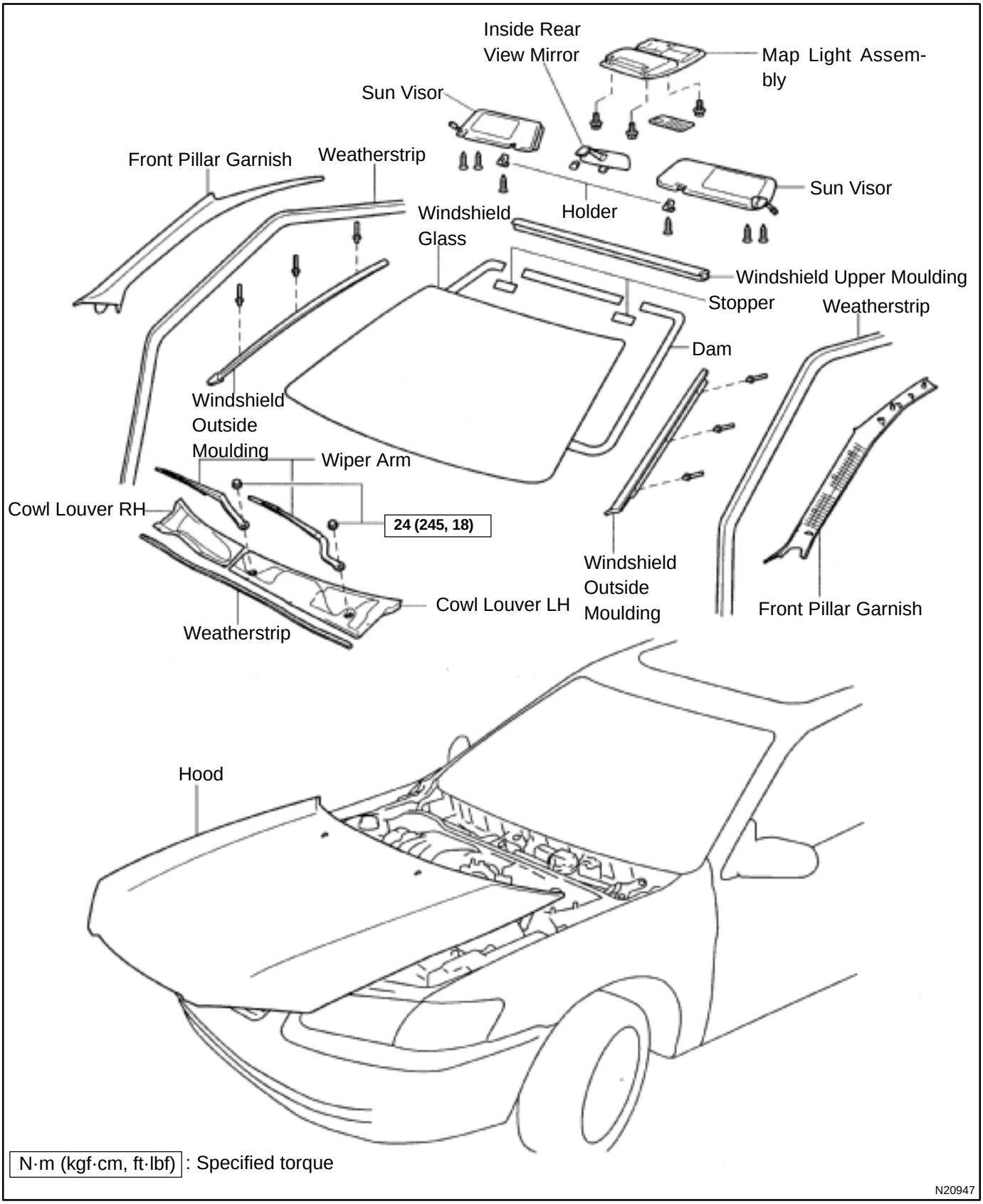

BO0LP–01

REMOVAL

1. REMOVE THESE PARTS:

(a) Inner rear view mirror
(b) Sun visors and holders
(c) Map light assembly
(d) Front pillar garnishes
(e) Hood
(f) Wiper arms
(g) Cowl louvers
(h) Weatherstrips

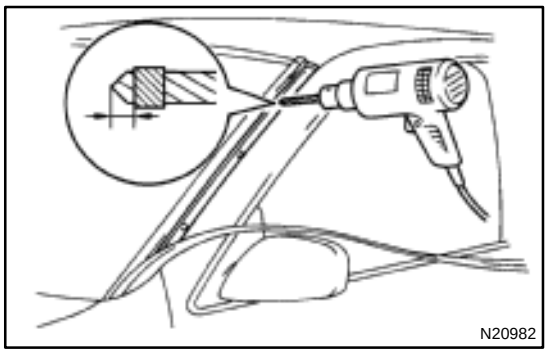
N20982

2. REMOVE WEATHERSTRIP

Remove the weatherstrip by pulling.

HINT:

Remove only the front half of weatherstrip.

3. REMOVE WINDSHIELD OUTSIDE MOULDING

(a) Using a drill of less than ø 5.0 mm (0.20 in.), drill out the rivet heads and remove the moulding.
(b) Using a vacuum cleaner, remove the drill rivet and their dust from the inside of the door.

CAUTION:

The cut rivet and rivet cutter will be not, avoid touching them.

NOTICE:

Do not jiggle the rivet cutter while cutting.You may enlarge the rivet hole or damage the rivet cutter.

HINT:

Do not drill the body.

Sealant may cause the moulding to stick to the glass. If necessary, separate from the glass using a knife.

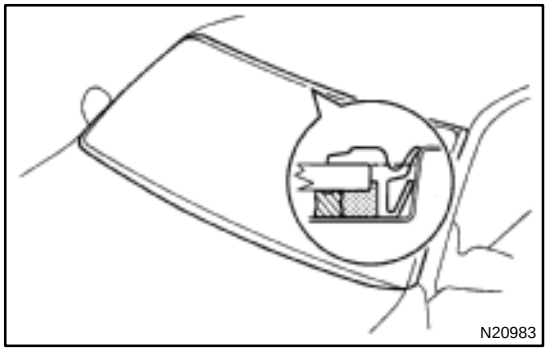
N20983

4. REMOVE WINDSHIELD UPPER MOULDING

Using a knife, cut off the moulding as shown.

NOTICE:

Do not damage the body with the knife.

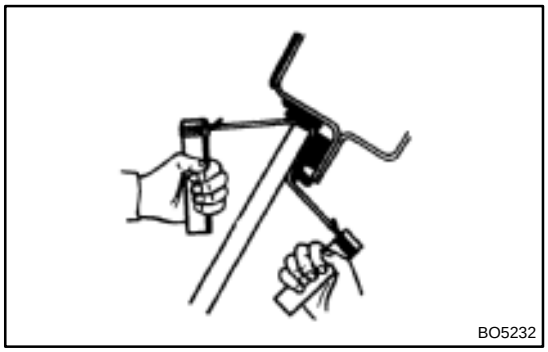
BO5232

5. REMOVE WINDSHIELD GLASS

(a) Push piano wire through between the body and glass from the interior.
(b) Tie both wire ends to a wooden block or a similar object.

HINT:

Apply adhesive tape to the outer surface to prevent scratching.

NOTICE:
When separating the glass, be careful not to damage the paint and interior and exterior ornaments. To prevent scratching the safety pad when removing the windshield, place a plastic sheet between the piano wire and safety pad.

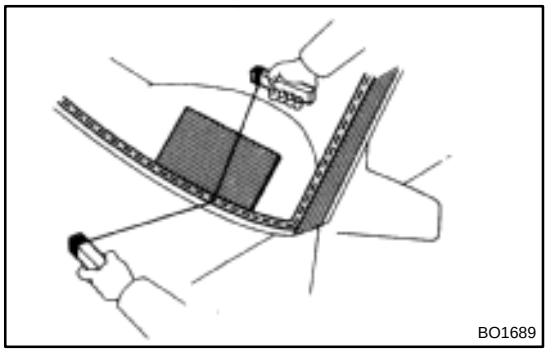
BO1689

(c) Cut the adhesive by pulling the piano wire around it.
(d) Remove the glass.

NOTICE:
Leave as much of the adhesive on the body as possible when removing the glass.

6. REMOVE RETAINERS

BO0LQ–01

INSTALLATION

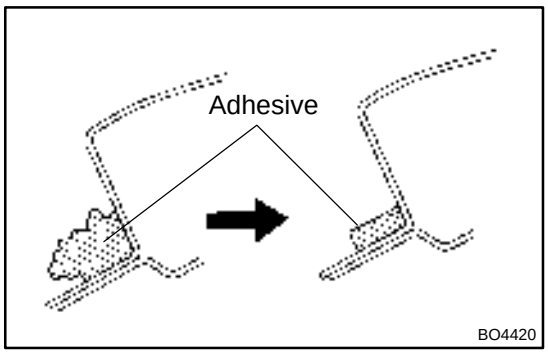

1. CLEAN AND SHAPE CONTACT SURFACE OF BODY

(a) Using a knife, cut away any rough areas on the body.

HINT:

Leave as much of the adhesive on the body as possible.

(b) Clean the cutting surface of the adhesive with a piece of shop rag saturated in cleaner.

HINT:

Even if all the adhesive has been removed, clean the body.

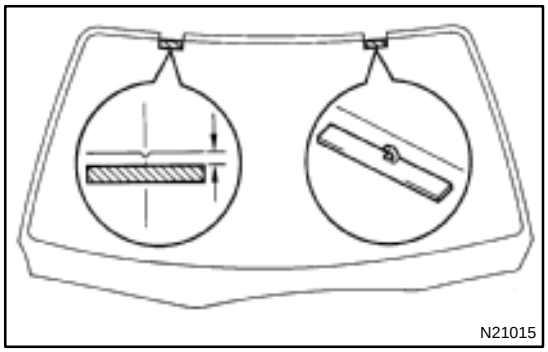

2. REPLACE STOPPER

(a) Remove the damaged stopper.

(b) Cut off the old adhesive around the stopper installation area.

NOTICE:

Be careful not to damage the body.

(c) Clean the installation area.

(d) Install a new stopper onto the body.

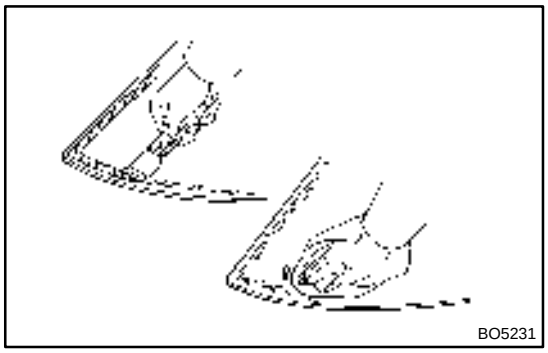

3. CLEAN REMOVED GLASS

(a) Using a scraper, remove the adhesive sticking to the glass.

(b) Clean the glass with cleaner.

NOTICE:

Do not touch the glass after cleaning it.

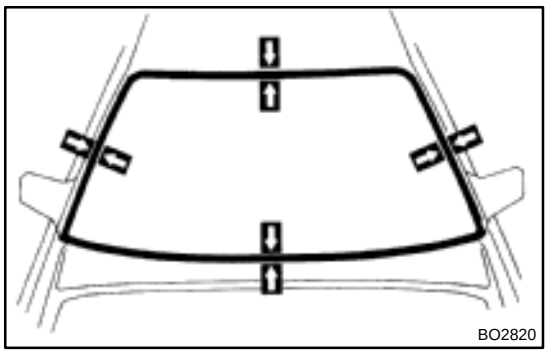

4. POSITION GLASS

(a) Place glass in the correct position.

(b) Check that all contacting parts of the glass rim are perfectly even and do not make contact with the fasteners.

(c) Place reference marks between the glass and body.

(d) Remove the glass.

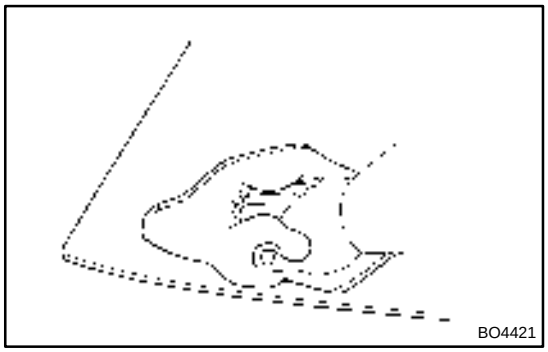

5. CLEAN CONTACT SURFACE OF GLASS

Using a cleaner, clean the contact surface black–colored area around the entire glass rim.

NOTICE:

Do not touch the glass face after cleaning it.

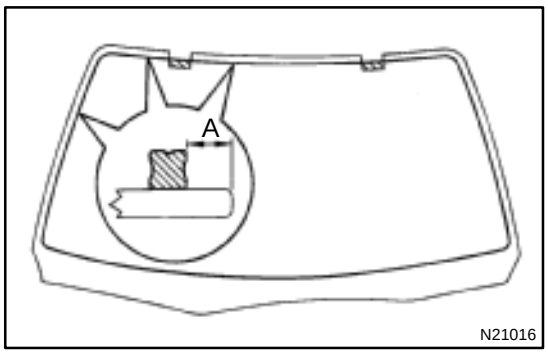

6. INSTALL DAM

Install the dam with double–stick tape as shown in the illustration.

NOTICE:

Do not touch the glass face after cleaning it.

A: 7 mm (0.276 in.)

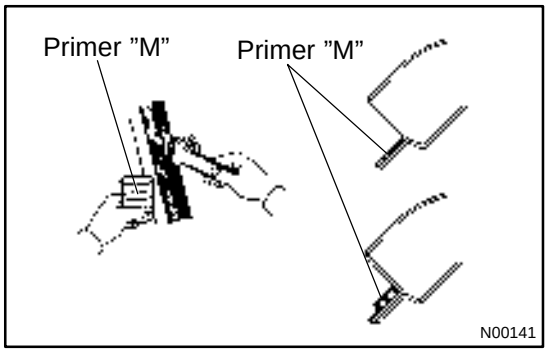

7. COAT CONTACT SURFACE OF BODY WITH PRIMER ”M”

Using a brush, coat the contact surface on the body with Primer M.

NOTICE:

Let the primer coating dry for 3 minutes or more. Do not coat Primer M to the adhesive. Do not keep any of the opened Primer M for later use.

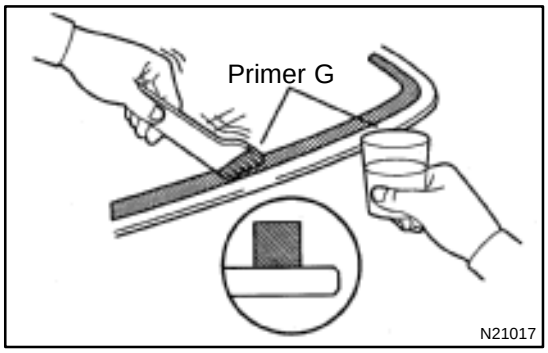

8. COAT CONTACT SURFACE OF GLASS WITH PRIMER ”G”

(a) Using a brush or a sponge, coat the edge of the glass and the contact surface with Primer G.

(b) Before the primer dries, wipe it off with a clean shop rag.

NOTICE:

Let the primer coating dry for 3 minutes or more. Do not keep any of the opened Primer G for later use.

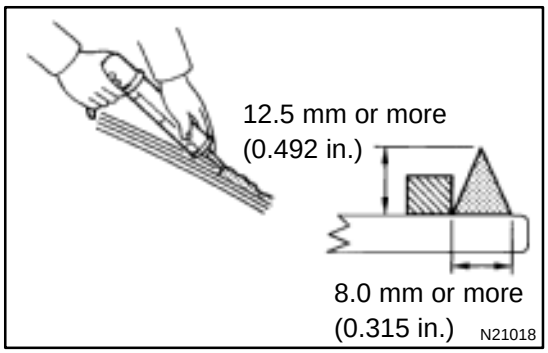

9. APPLY ADHESIVE

(a) Cut off the tip of the cartridge nozzle. Fill the cartridge with adhesive.

Part No. 08850 – 00801 or equivalent

HINT:

After cutting off the tip, use all adhesive within the time described in the chart below.

Temperature	Tackfree time
35 ˚C (95 ˚F)	15 minute
20 ˚C (68 ˚F)	100 minute
5 ˚C (41 ˚F)	8 hour

(b) Load the cartridge into the sealer gun.

(c) Coat the glass with adhesive as shown.

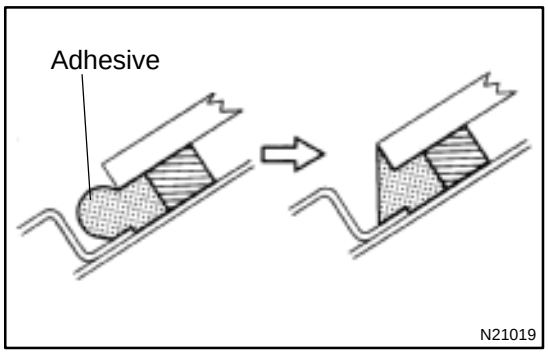

10. INSTALL GLASS

HINT:

Confirm that the dam is attached the body panel as shown in the illustration.

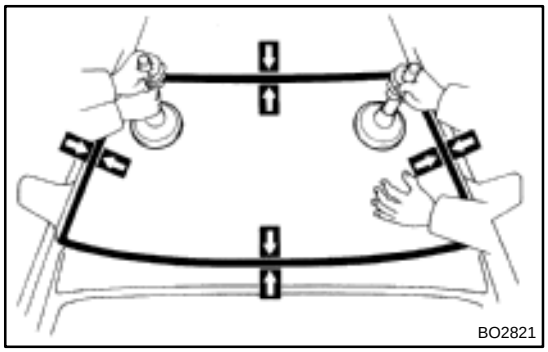

(a) Position the glass so that the reference marks are lined up, and press in gently along the rim.

(b) Using a spatula, apply adhesive on the glass rim.

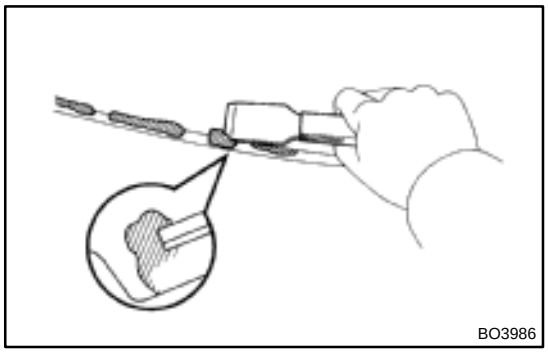

(c) Use a scraper to remove any excess or protruding adhesive.

NOTICE:

Take care not to drive the vehicle during the time described in the chart below.

Temperature	Minimum time prior to drive the vehicle
35 ˚C (95 ˚F)	1.5 hour
20 ˚C (68 ˚F)	5 hour
5 ˚C (41 ˚F)	24 hour

(d) Hold the windshield glass in place securely with a protective tape or equivalent until the adhesive hardened.

11. INSPECT FOR LEAKS AND REPAIR

(a) Do a leak test after the hardening time has elapsed.

(b) Seal any leak with sealant.
Part No. 08833 – 00030 or equivalent

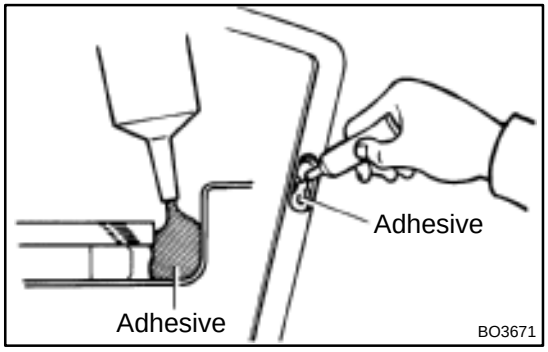

12. APPLY ADHESIVE AT MOULDING INSTALLATION AREA
Part No. 08833 – 00030 or equivalent

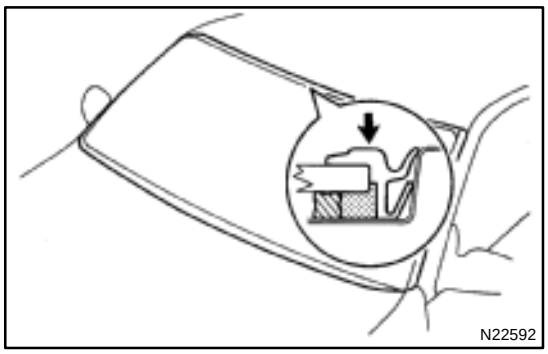

13. INSTALL WINDSHIELD UPPER MOULDING

Place the moulding onto the body and tap it in by hand.

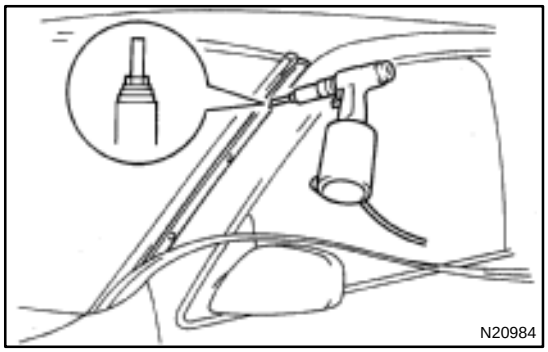

14. INSTALL WINDSHIELD OUTSIDE MOULDING

(a) Install the pawl of the outside moulding to the upper moulding to set the moulding to the body.

(b) Using an air riveter with nose piece, install the new 3 rivets and outside moulding.

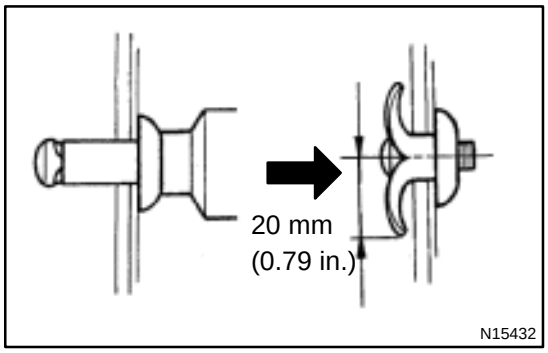

CAUTION:

To avoid personal injury and short of the wiring when installing ø 5.0 mm (0.20 in.) rivets keep your hands out of the 20 mm (0.79 in.) radius that the caulked ø 5.0 mm (0.20 in.) rivet will cover.

HINT:

Install the rivet firmly pressed at a right angle (90˚) against the installation hole.

15. INSTALL THESE PARTS:

(a) Cowl louvers

(b) Weatherstrips

(c) Wiper arms

Torque: 24 N·m (245 kgf·cm, 18 ft·lbf)

(d) Front pillar garnishes

(e) Map light assembly

(f) Sun visors and holders

(g) Inner rear view mirror

BACK WINDOW GLASS

COMPONENTS

BO0LR–01

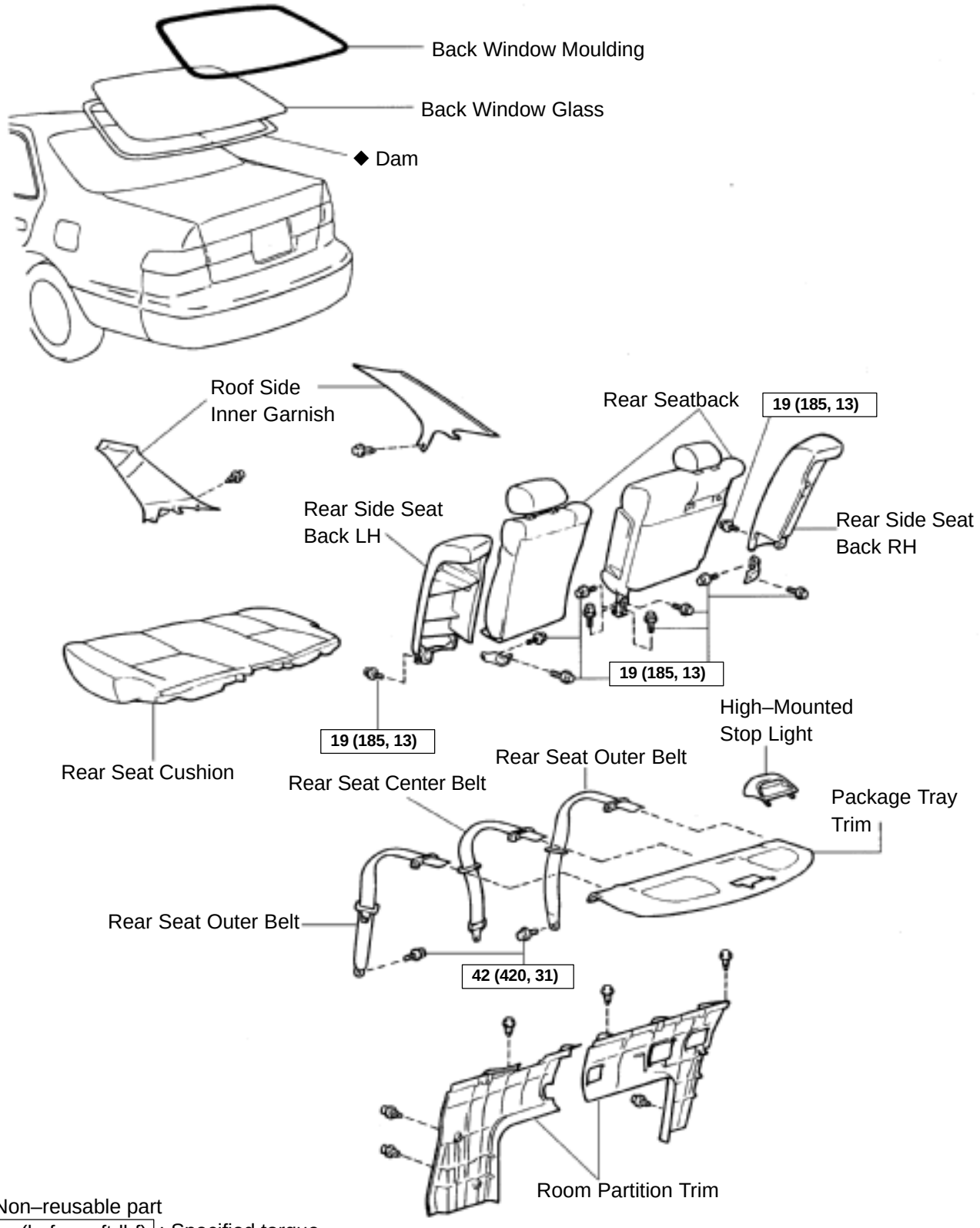

◆ Non–reusable part

N·m (kgf·cm, ft·lbf) : Specified torque

N20948

BO0LS–01

REMOVAL

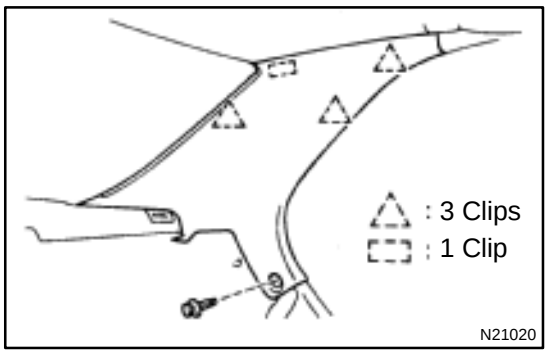

1. REMOVE REAR SEAT CUSHION AND SEATBACKS

2. REMOVE ROOF SIDE INNER GARNISHES

(a) Remove the clips.

(b) Pull the garnish to remove it.

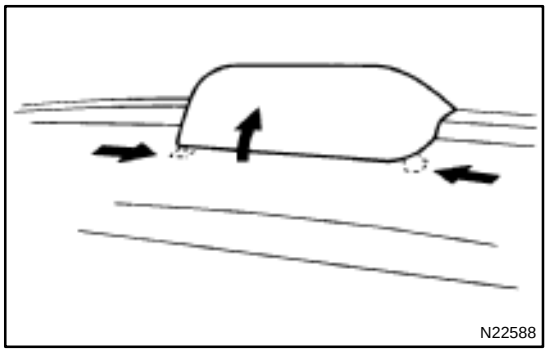

3. REMOVE HIGH–MOUNTED STOP LIGHT

(a) Push on the both side of the cover to release the claws by your hand and remove the cover as shown in the illustration.

(b) Remove the 2 bolts and stop light, then disconnect the connector.

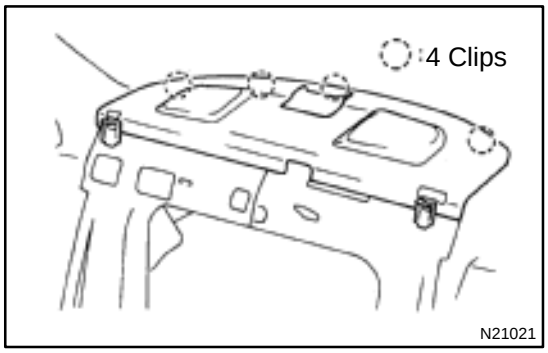

4. REMOVE PACKAGE TRAY TRIM

(a) Remove the bolts holding the rear seat belt lower side to the body.

(b) Remove the seat belts with seat belt hole covers from the package trim.

(c) Remove the trim by pulling forward.

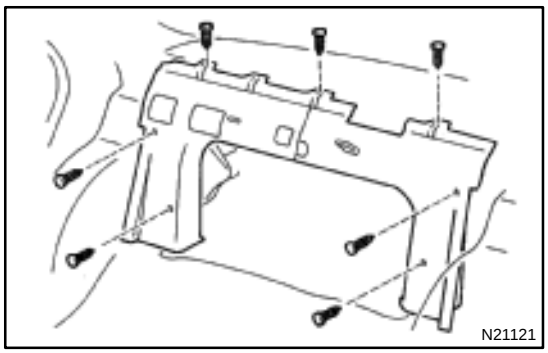

5. REMOVE ROOM PARTITION TRIMS

Remove the 6 clips and room partition trims.

6. REMOVE THESE PARTS

(a) Assist grips.

(b) Rear side of roof headlining.

7. DISCONNECT DEFOGGER WIRE CONNECTORS

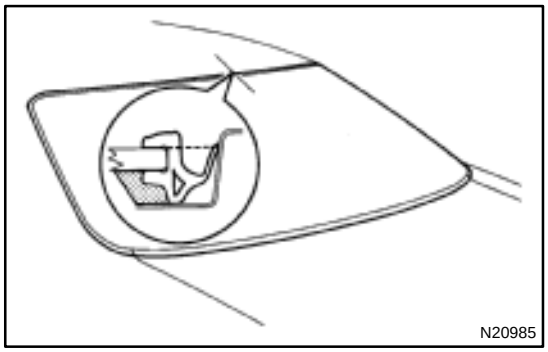

8. REMOVE BACK WINDOW MOULDING

Using a knife, cut off the moulding as shown.

NOTICE:

Do not damage the body with the knife.

9. REMOVE BACK WINDOW GLASS

Remove the glass in the same way as windshield.

(See page BO–43)

BO0LT–01

INSTALLATION

HINT:

Refer to the installation of windshield, install back window glass by the following operations.

(See page BO–45)

1. CLEAN AND SHAPE CONTACT SURFACE OF BODY

2. CLEAN REMOVED GLASS

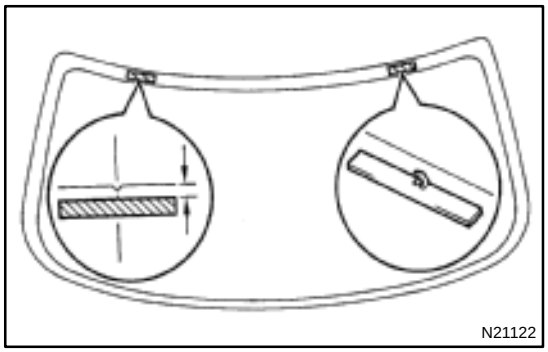

3. REPLACE STOPPERS

4. POSITION GLASS

5. CLEAN CONTACT SURFACE OF GLASS

6. INSTALL DAM

Install the dam with double–stick tape as show in the illustration.

NOTICE:

Do not touch the glass face after cleaning it.

7. COAT CONTACT SURFACE OF BODY WITH PRIMER ”M”

8. COAT CONTACT SURFACE OF GLASS WITH PRIMER ”G”

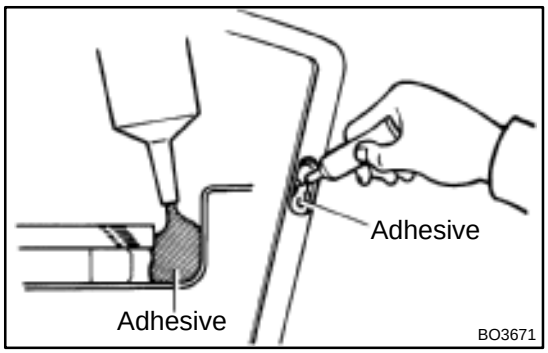

9. APPLY ADHESIVE AT MOULDING INSTALLATION AREA

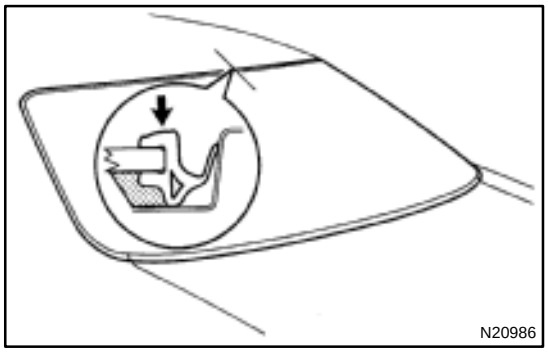

10. INSTALL BACK WINDOW MOULDING

Place the moulding onto the body and tap it by hand.

11. APPLY ADHESIVE

12. INSTALL GLASS

13. INSPECT FOR LEAKS AND REPAIR

14. CONNECT DEFOGGER CONNECTORS

15. INSTALL THESE PARTS:

(a) Rear side of roof headlining

(b) Assist grips

(c) Package tray trim

(d) Room partition trims
(e) Seat belt lower side bolts
Torque: 42 N·m (420 kgf·cm, 31 ft·lbf)
(f) High–mounted stop light
(g) Roof side inner garnish
(h) Rear seatbacks and seat cushion
Torque: 18 N·m (185 kgf·cm, 13 ft·lbf)

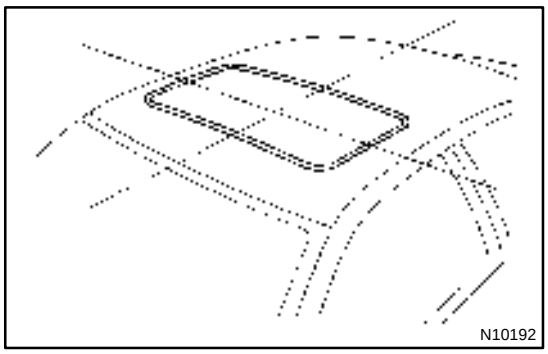
N10192

SLIDING ROOF (TMC Made)

BO0M1–01

ON–VEHICLE INSPECTION

INSPECT SLIDING ROOF GLASS ALIGNMENT

(a) Start the engine and check the operation time of the sliding roof.
Operation time:
Approx. 6 secs.

(b) Check for abnormal noise or binding during operation.

(c) With the sliding roof fully closed, check for water leakage.

(d) Check for a difference in level between the sliding roof weatherstrip and roof panel.
Except rear end:
0 ± 1.5 mm (0 ± 0.059 in.)
Rear end:
0 + 1.5 mm (0 + 0.059 in.)
0 – 1.0 mm (0 – 0.039 in.)

BO0M2–01

COMPONENTS

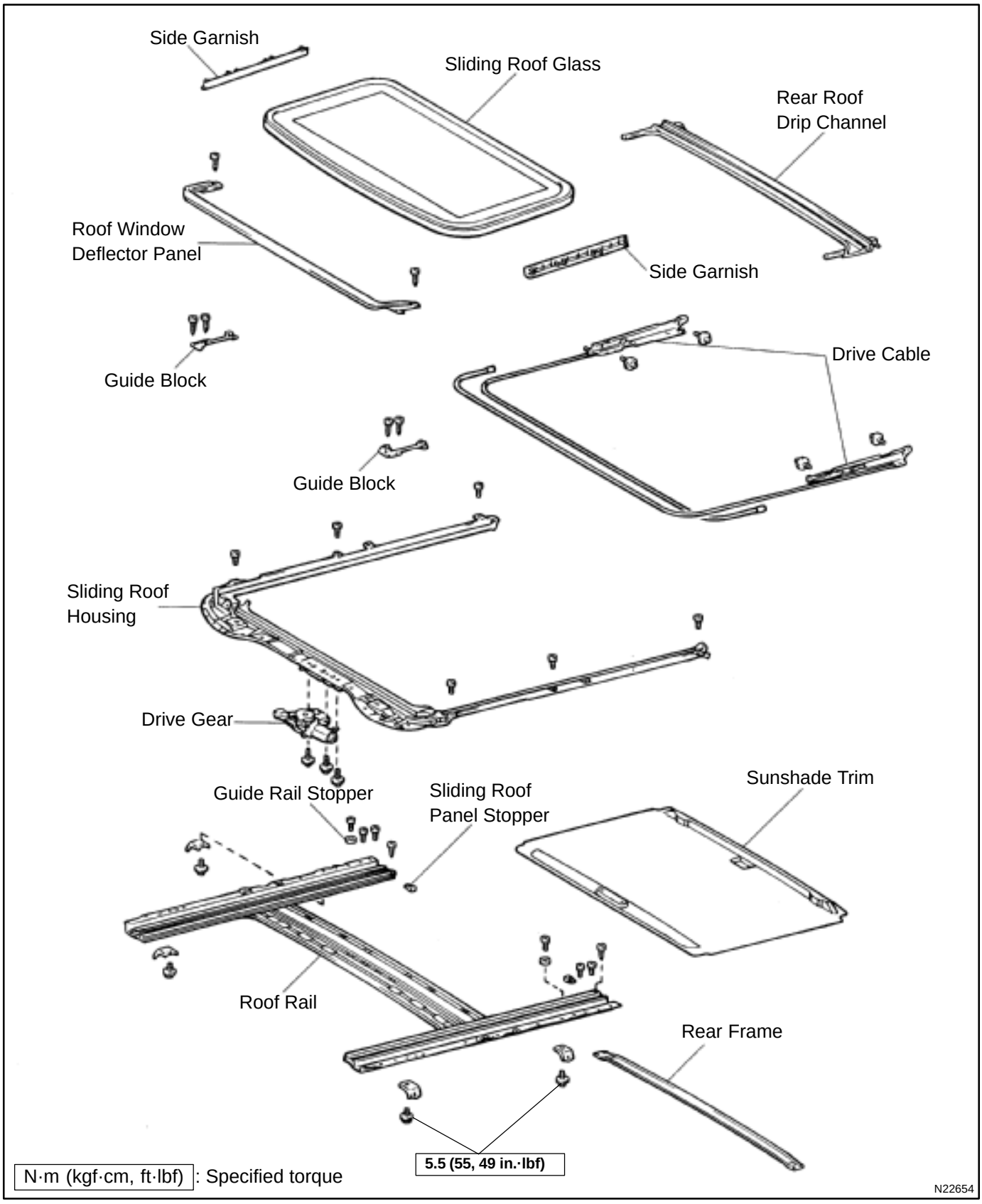

BO0M3–01

REMOVAL

1. REMOVE ROOF HEADLINING
(See page BO–83)

2. REMOVE SIDE GARNISH

Using a screwdriver, remove the garnishes.

HINT:

Tape the screwdriver tip before use.

3. REMOVE SLIDING ROOF GLASS ASSEMBLY

(a) Using a torx wrench, remove the 4 screws.

(b) Pull the glass upward to remove it.

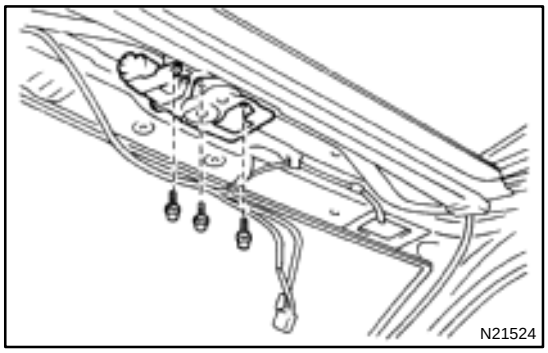
N21524

4. REMOVE DRIVE GEAR

NOTICE:

Remove the drive gear with the sliding roof is full closed.

(a) Disconnect the connector.

(b) Remove the 3 bolts and drive gear.

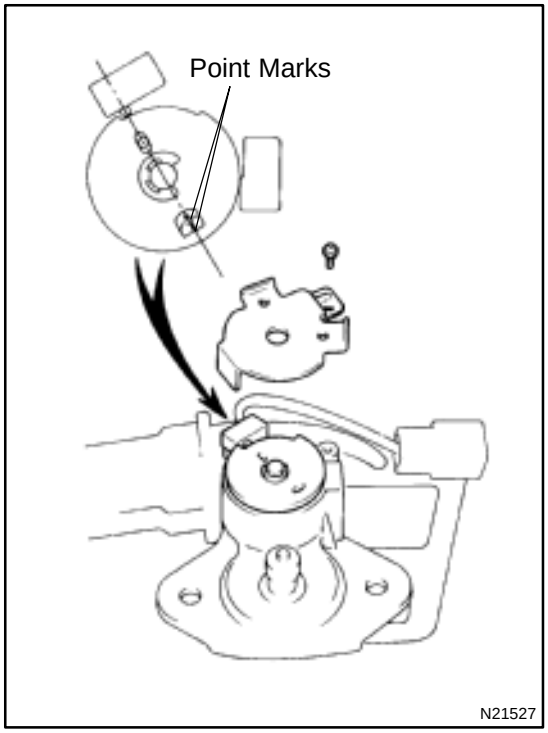

N21527

(c) Remove the screw and cam plate cover.

(d) Turn the drive gear to align the point marks as shown in the illustration.

(e) Install the cam plate cover and screw.

NOTICE:

At the time of installation, please refer to the following item. If the sliding roof position and drive gear full close position is not matched, the sliding roof does not operate normally.

5. REMOVE SLIDING ROOF HOUSING

(a) Disconnect the 4 drain hoses from the housing.

(b) Remove the 8 bolts and 4 brackets.

Torque: 5.5 N·m (55 kgf·cm, 49 in.·lbf)

(c) Remove the 6 nuts, then remove the housing as shown on the following page.

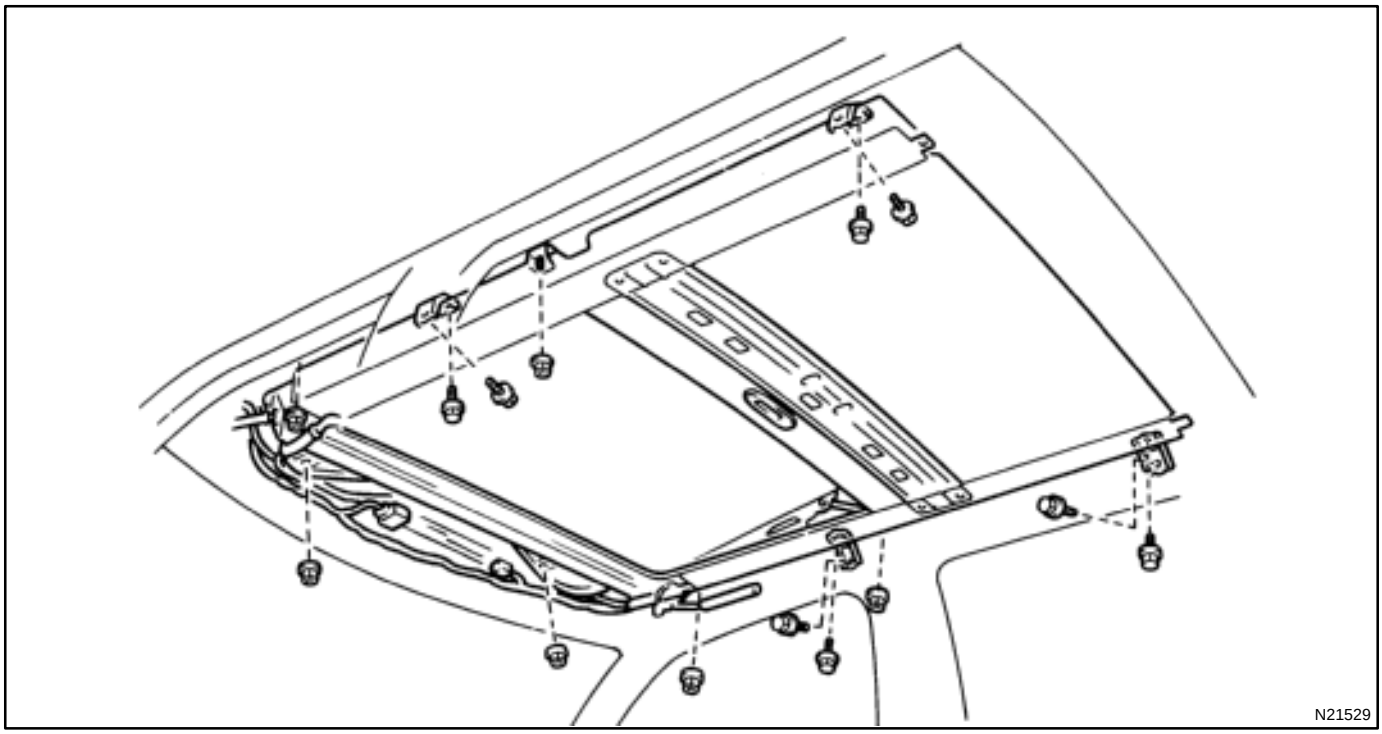

BO0M4–01

DISASSEMBLY

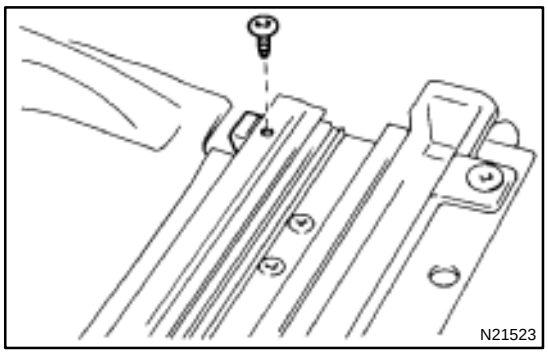

1. REMOVE SLIDING ROOF PANEL STOPPER

Remove the 2 screws and 2 stoppers.

2. REMOVE SUNSHADE TRIM

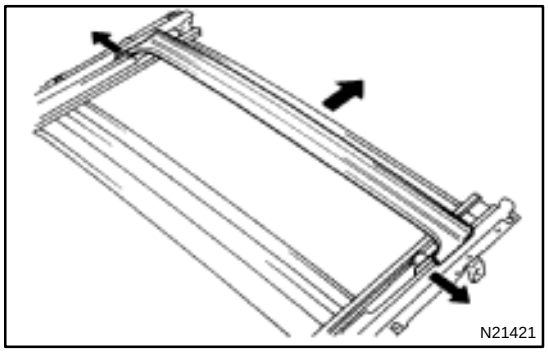

3. REMOVE REAR ROOF DRIP CHANNEL

Remove the rear roof drip channel as shown in the illustration.

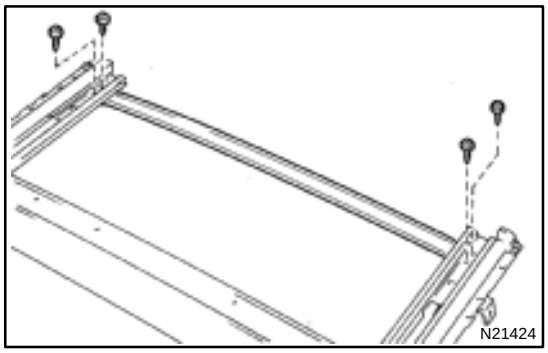

4. REMOVE REAR FRAME

Remove the 4 screws and rear frame.

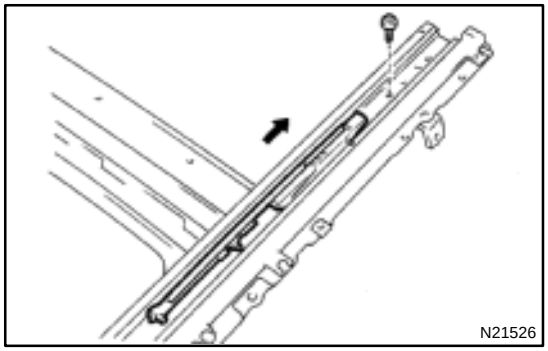

5. REMOVE DRIVE CABLE

(a) Remove the screw and guide rail stopper.

(b) Slide the drive cable rearward, then remove it.

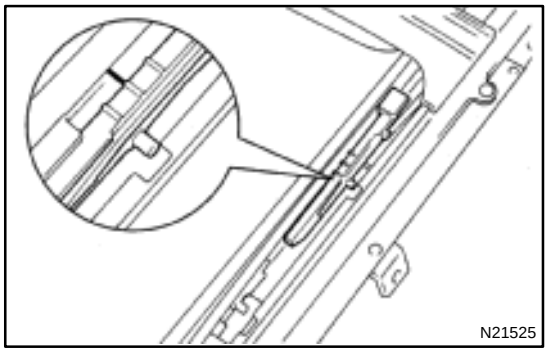

HINT:

At the time of reassembly, please refer to the following items.

- Adjust the drive cable to a closed and tilted down position.
- Slide the cable forward or backward to align the 2 marks as shown.
- Slide the cable to the forefront with your hand.

6. REMOVE ROOF WINDOW DEFLECTOR PANEL

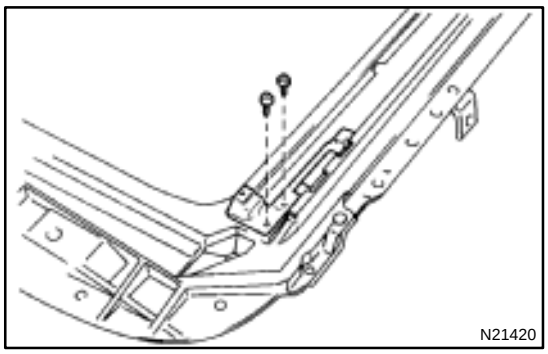

7. REMOVE GUIDE BLOCK

Remove the 2 screws and guide block.

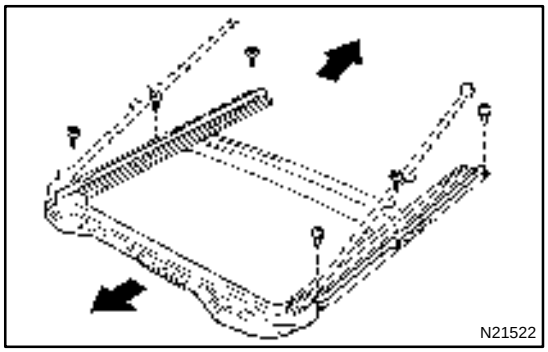

8. REMOVE SLIDING ROOF HOUSING

Remove the 6 screws and sliding roof housing.

BO0M5–01

ADJUSTMENT

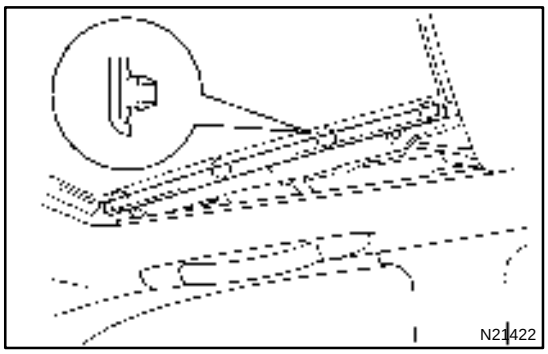

1. REMOVE SIDE GARNISH

Before making adjustments, using a screwdriver, remove the side garnishes.

HINT:

- Tape the screwdriver tip before use.
- After adjustment, reinstall the side garnishes.

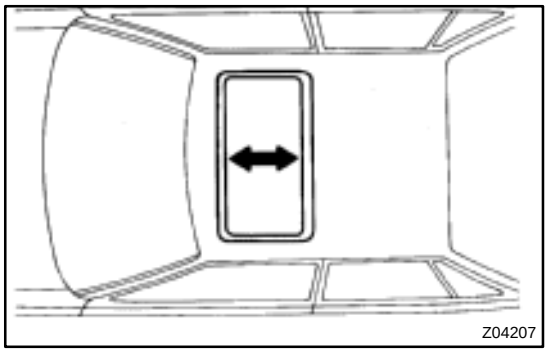

2. TO ADJUST FORWARD OR REARWARD

(a) Using a torx wrench, loosening the sliding roof glass installation screws.

(b) Adjust the sliding roof glass forward and rearward.

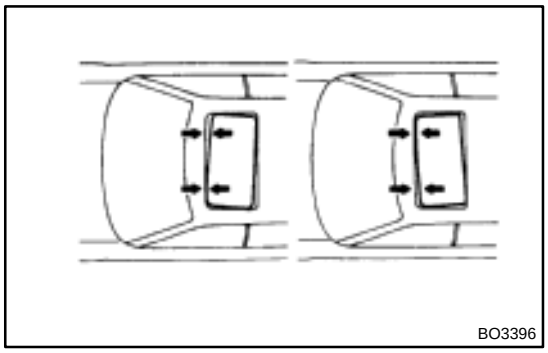

3. TO ADJUST CLEARANCE (Difference in left and right clearance)

(a) When the front or rear alignment is not correct, remove the drive gear and sliding roof glass, then adjust the drive rail.

NOTICE:

Remove the drive gear with sliding roof is full closed.

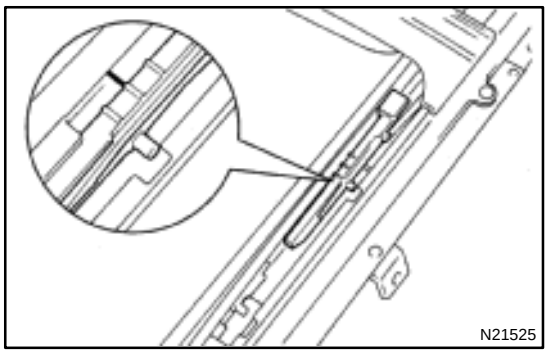

(b) Adjust by slide the cable forward or rearward to align the 2 marks as shown.

(c) Install the drive gear and sliding roof glass.

REASSEMBLY

Reassembly is in the reverse order of disassembly (See page BO–57).

BO0M7–01

INSTALLATION

Installation is in the reverse order of removal (See page BO–55).

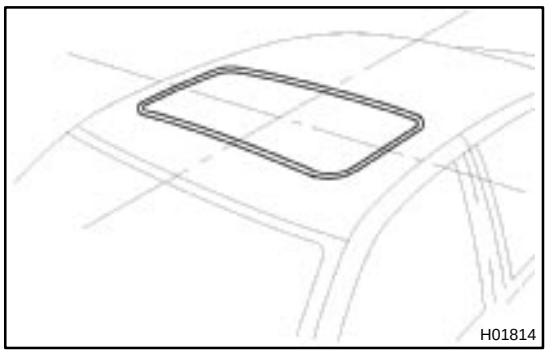

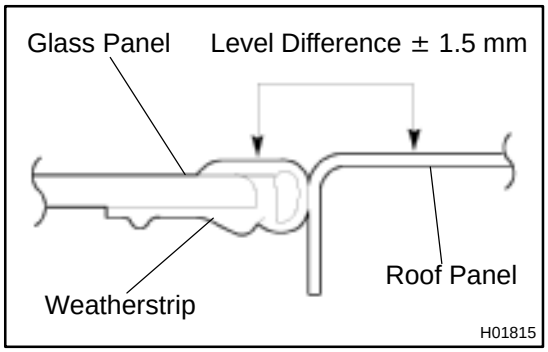

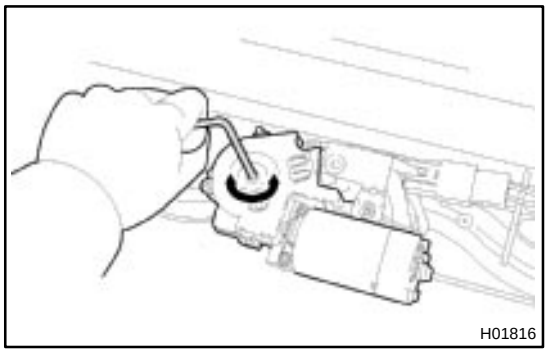

SLIDING ROOF (TMMK Made)

BO0LU–01

ON–VEHICLE INSPECTION

INSPECT SLIDING ROOF GLASS ALIGNMENT

(a) Start the engine and check the operation time of the sliding roof.

Operation time:

Approximately 6 sec.

(b) Check for abnormal noise or binding during operation.

(c) Check for water leakage with the sliding roof fully closed.

(d) Check the alignment between the sliding roof weatherstrip and the roof panel.

All sides:

0 ± 1.5 mm (0 ± 0.059 in.)

HINT:

At the time of installation, please refer to the following item.

To align the glass to the roof surface, loosen the 4 screws, then adjust and retighten.

If the sliding roof does not operate:

(e) Remove the map light assembly.

(f) Manually operate the sliding roof by inserting a hex wrench into the motor to turn the drive shaft.

BO0LV–01

COMPONENTS

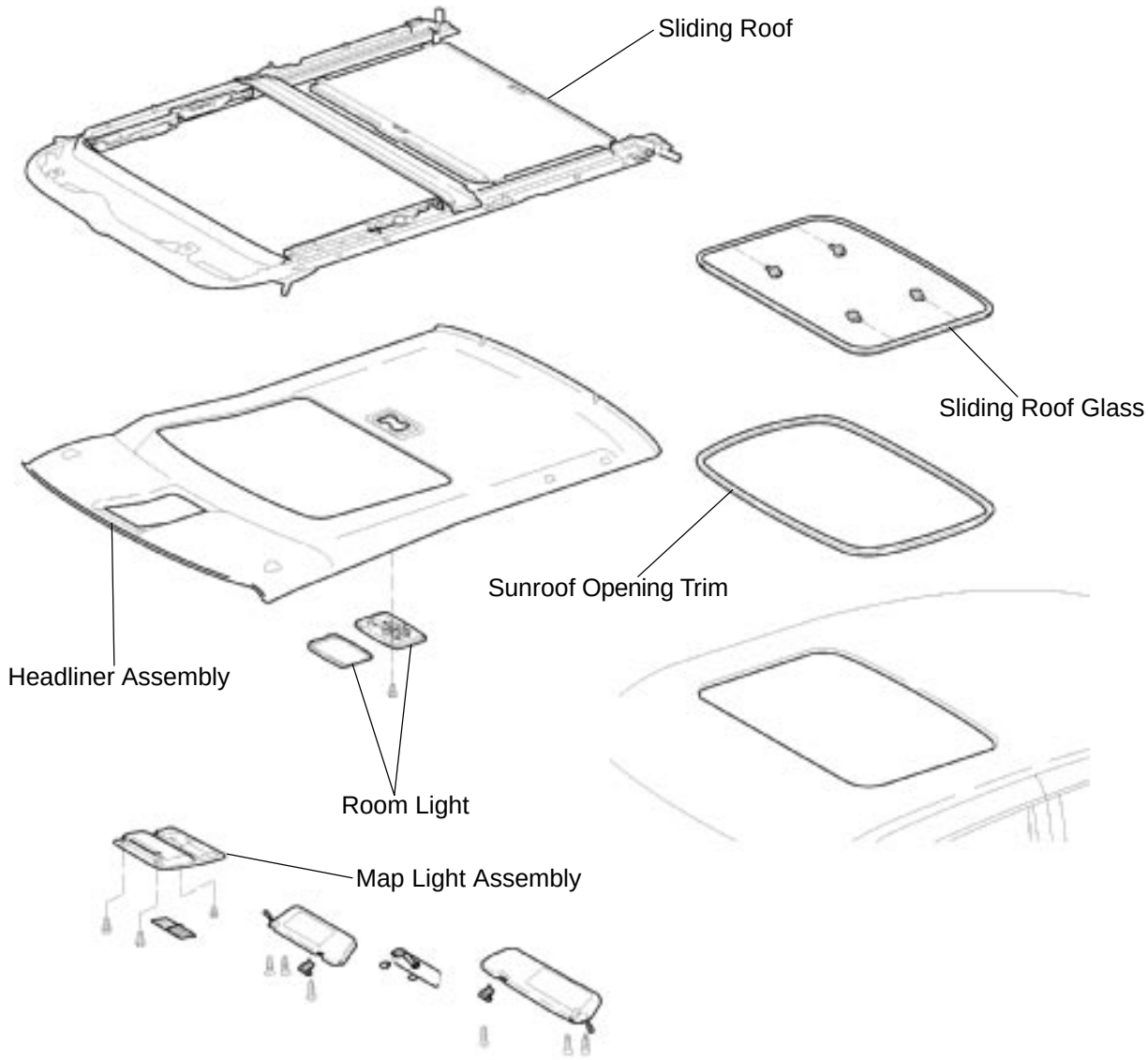

H01812

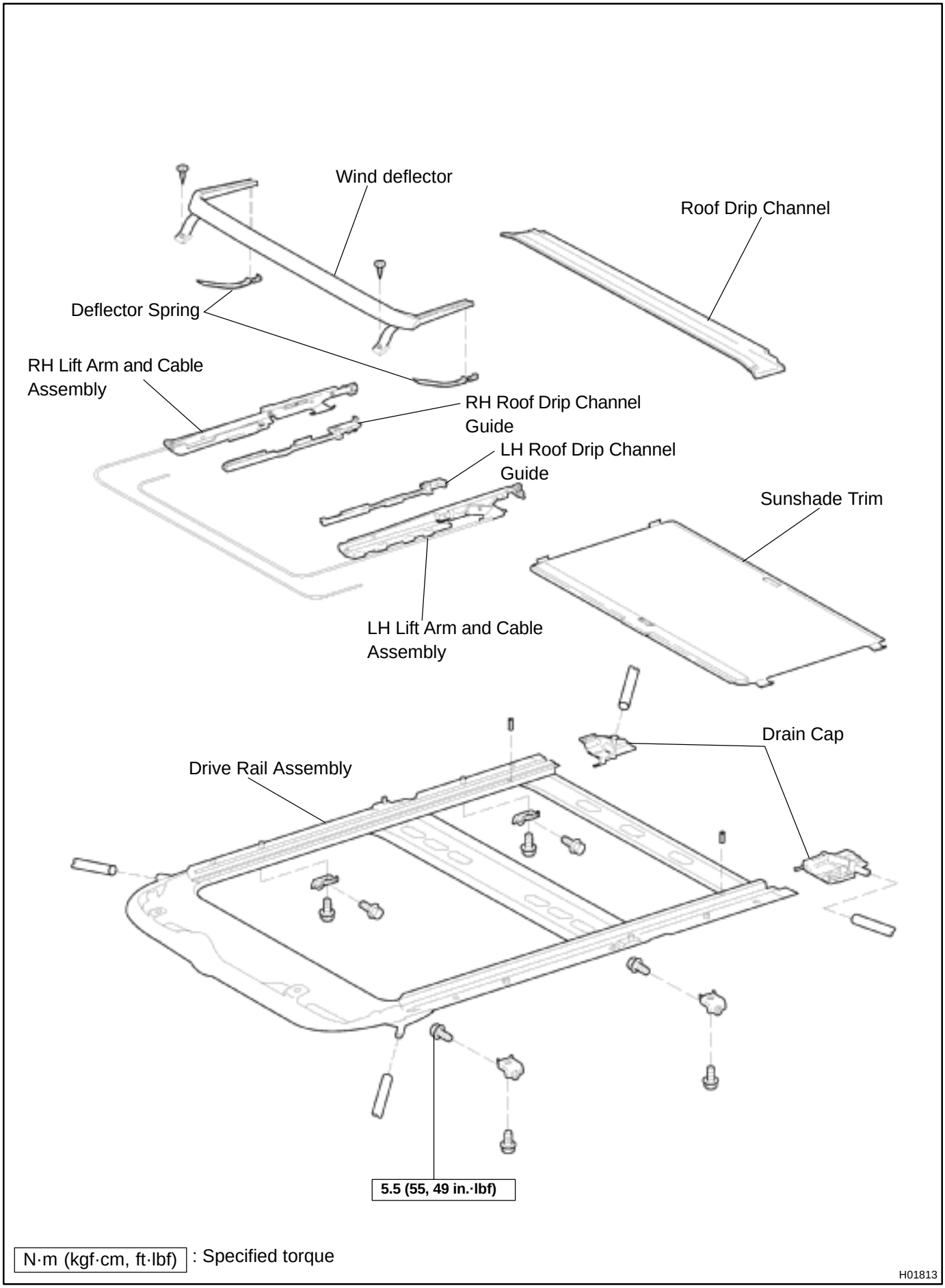
Wind deflector
Roof Drip Channel
Deflector Spring
RH Lift Arm and Cable Assembly
RH Roof Drip Channel Guide
LH Roof Drip Channel Guide
Sunshade Trim
LH Lift Arm and Cable Assembly
Drain Cap
Drive Rail Assembly
5.5 (55, 49 in.·lbf)
N·m (kgf·cm, ft·lbf) : Specified torque
H01813

BO0LW–01

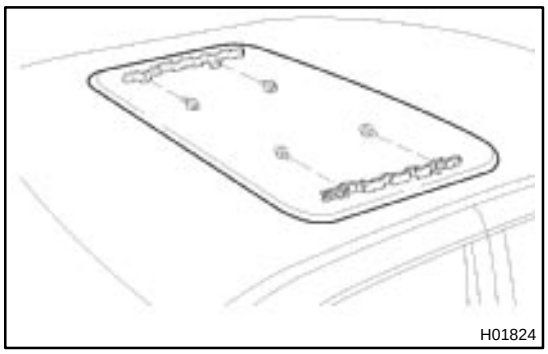
H01824

REMOVAL

1. REMOVE ROOF HEADLINING
(See page BO–83)

2. REMOVE SIDE GARNISHES

HINT:
At the time of installation, please refer to the following item.
Soak the garnishes in water to soften them before assembly.

3. REMOVE GLASS PANEL ASSEMBLY

(a) Remove the 4 glass panel adjustment screws.

HINT:
At the time of installation, please refer to the following item.
Adjust the height of the glass panel, then tighten the 4 screws.

(b) Pull the glass upward to remove it.

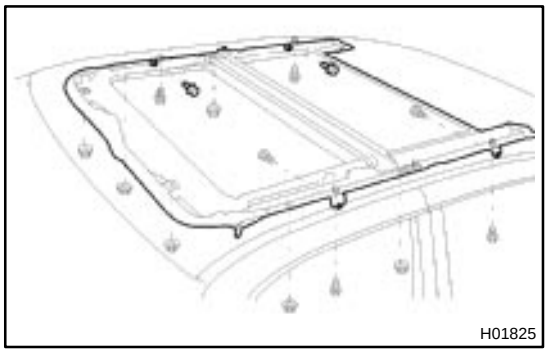
H01825

4. REMOVE SLIDING ROOF ASSEMBLY

(a) Remove the 4 drain hoses from the sliding roof assembly.

(b) Remove the 8 bolts and 4 brackets.
Torque: 5.5 N·m (55 kgf·cm, 49 in.·lbf)

(c) Remove the 6 nuts and the sliding roof assembly.

BO0LX–01

DISASSEMBLY

1. REMOVE SLIDING ROOF HOUSING DRAIN CAP

Pull the drain cap rearward to remove it.

HINT:

At the time of reassembly, please refer to the following item.

Apply seal packing to the drain cap.

Seal packing:

Part No.1 08826 – 00090 or equivalent

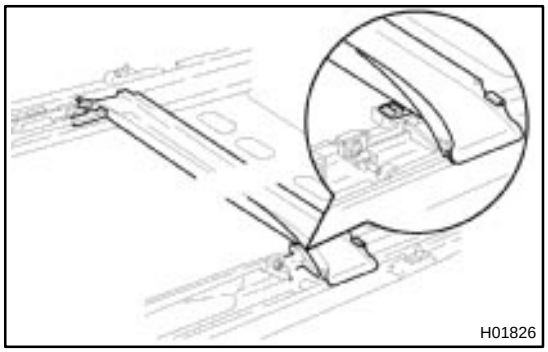

2. REMOVE REAR ROOF DRIP CHANNEL

Unclip the roof drip channel from the roof drip channel guide.

HINT:

At the time of reassembly, please refer to the following item.

Aligh the rear roof drip channel to the roof drip channel guide hook.

3. REMOVE SUNSHADE TRIM

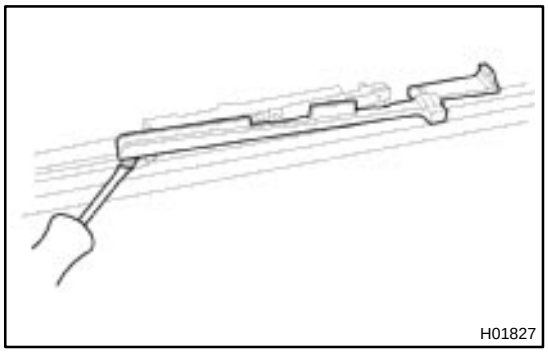

4. REMOVE LH AND RH ROOF DRIP CHANNEL GUIDE

(a) Using a screwdriver, remove the guide from the lift arm assembly.

HINT:

Tape the screwdriver tip before using.

(b) Slide the guide out of the side rail.

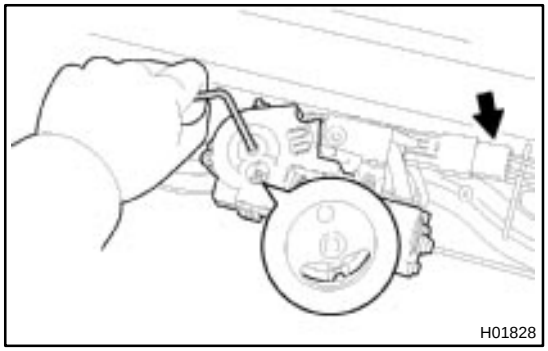

5. REMOVE DRIVE GEAR ASSEMBLY

(a) Use a hex wrench to align the gear pointer with the housing pointer.

(b) Disconnect the harness connector.

(c) Remove the 3 screws and the drive gear assembly.

HINT:

At the time of reassembly, please refer to the following item.

Aligh the drive gear assembly during reassembly.

(See page BO–68).

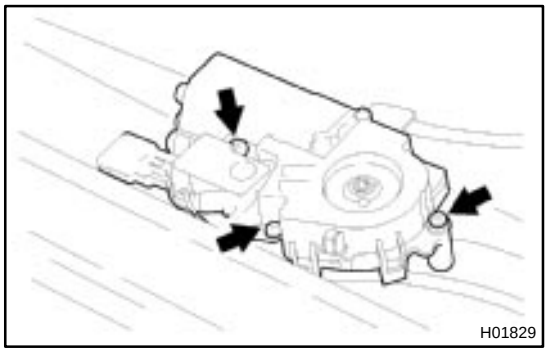

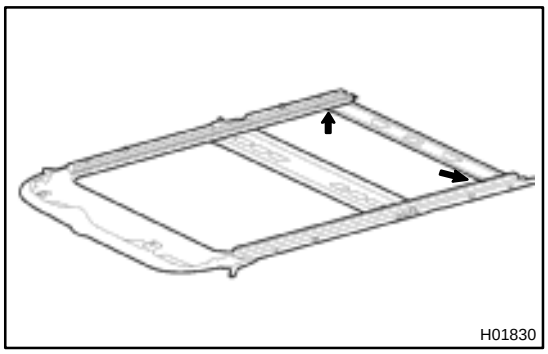

6. REMOVE LH AND RH SIDING ROOF LIFT ARM AND CABLE ASSEMBLIES

(a) Using a drill, cut the flange portion of the stop pin (rivet) from each side rail.

HINT:

At the time of reassembly, please refer to the following item.

Use two new rivets.

(b) Slide the LH sliding roof lift arm and drive cable from its side rail.

(c) Slide the RH sliding roof lift arm and drive cable from its side rail.

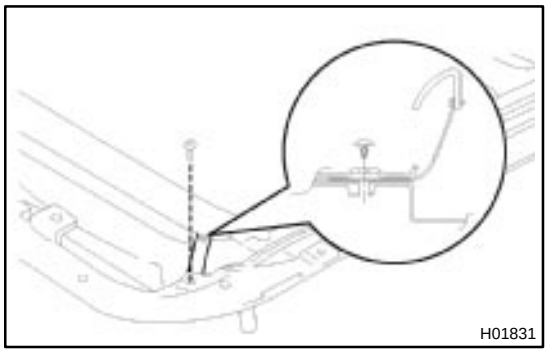

7. REMOVE WIND DEFLECTOR

(a) Remove the 2 screws from the front rail assembly.

HINT:

At the time of reassembly, please refer to the following item.

Insert the strap into the front rail assembly as shown.

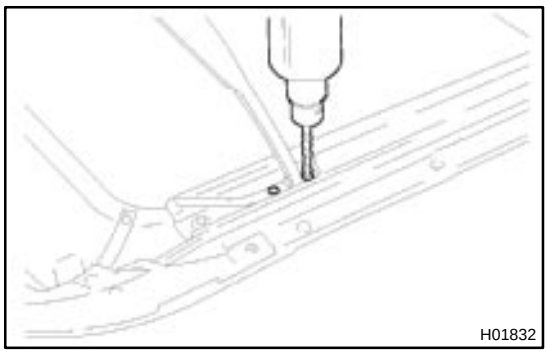

(b) Using a drill, cut the flange portion of the 4 rivets.

NOTICE:

Be careful not to damage the side rail (rivet) holes when drilling.

HINT:

At the time of reassembly, please refer to the following item.

Use 4 new special sealing type rivets.

Part No. 09884–26003

(c) Remove the deflector and spring assembly.

(d) Remove the spring from the deflector.

BO0LY–01

ADJUSTMENT

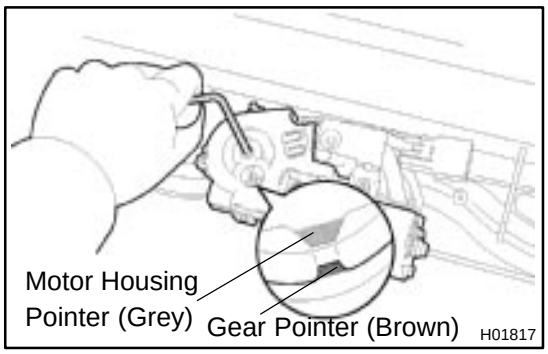

1. ALIGN THE MOTOR TO ”O” POSITION

NOTICE:

The ”O” position is the same as the sliding roof ”flush ” position (sliding roof closed).

Use the vehicle sliding roof switch or a hex wrench to align the gear pointer with the motor housing pointer as shown.

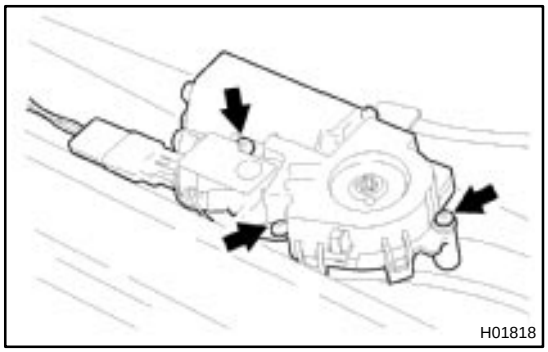

NOTICE:

Use only the sliding roof switch to electrically operate the motor or sliding roof. Do not use any other electrical source to power the motor. If the sliding roof switch (under vehicle power) is not available, use a hex wrench to align the motor pointers.

2. REMOVE DRIVE GEAR ASSEMBLY

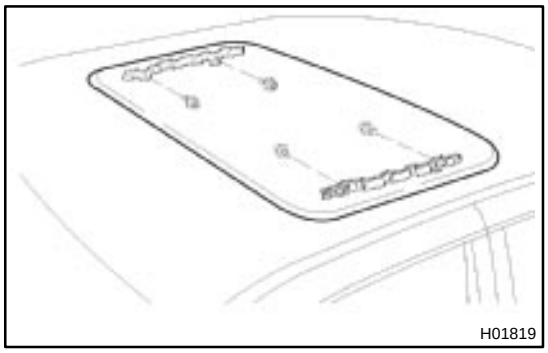

3. REMOVE GLASS PANEL

(a) Remove the 4 glass panels adjustment screws.

HINT:

At the time of installation, please refer to the following item.

Adjust the height of the glass panel, then tighten the 4 screws.

(b) Pull the glass upward to remove it.

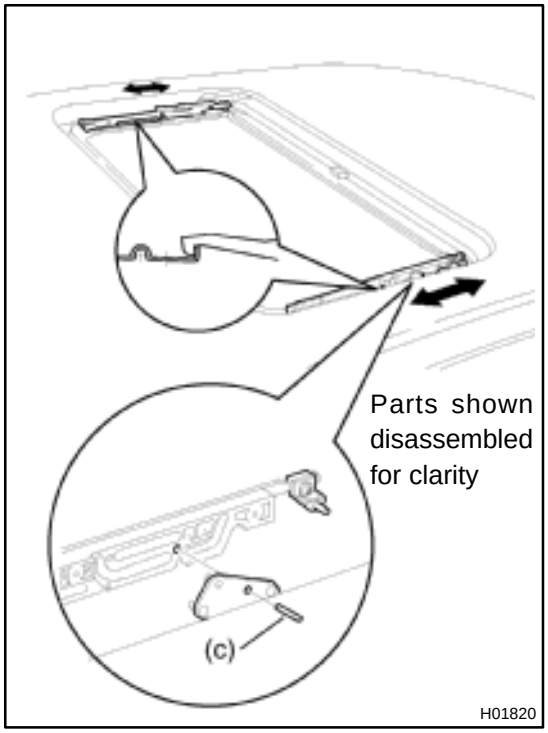

4. ALIGN SLIDING ROOF COMPONENTS

(a) Verify the hook appears as shown.

(b) Align the cable arm hole with the lift arm hole.

HINT:

Using a screwdriver, move the LH and RH cable assemblies forward and backward to align the holes in the cable arm and lifter arm.

(c) Temporarily insert a 3 mm (0.12 in.) pin through the alignment holes in the cable arm and lifter arm.

HINT:

Verify the cam block alignment hole is aligned with the lift arm alignment hole. Misalignment at this point will result in a malfunction of the sliding roof mechanism.

5. REINSTALL DRIVE GEAR ASSEMBLY

HINT:

Before reinstalling the drive gear assembly, double check the alignment of the gear pointers.

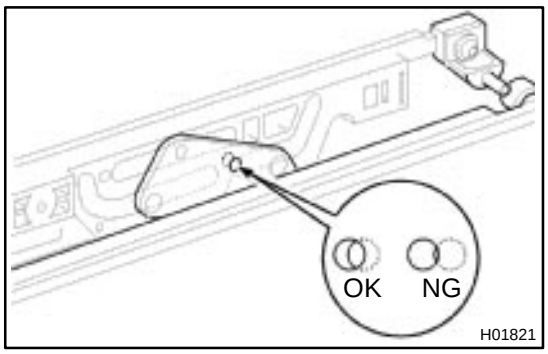

6. VERIFY CORRECT INSTALLATION TIMING

(a) Cycle the unit once (vent position closed, slide open, slide completely closed).

HINT:

After cycling the unit closed from the slide open position, verify the alignment holes in the cable arm and cam block are aligned and the motor pointers are in the ”O” position.

The timing of the sliding roof is okay if the holes are within 1/2 a diameter of each other as shown when closed from the ”side open” position.

NOTICE:

The holes will normally not align when moving the sliding roof from the vent open position to the closed position.

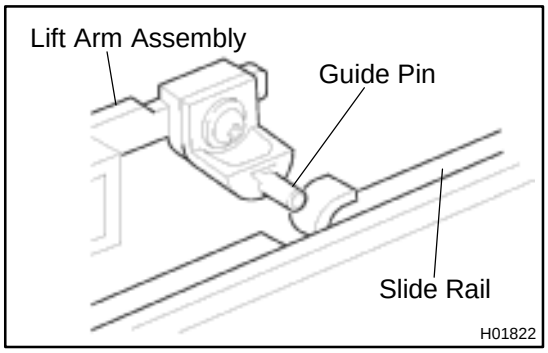

(b) There should be a slight interference between the guide pin and the curved ”lead–in” of the side rail. Confirm by cycling the unit. A clicking sound from the hook indicates the adjustment is incorrect.

If the guide pin has been disturbed, readjust as follows:

(1) Loosen the screw and adjust the pin so there is a slight interference.
(2) Tighten the screw and cycle the unit.
(3) Confirm the hook smoothly engages the wind deflector spring.
(4) Repeat if necessary.

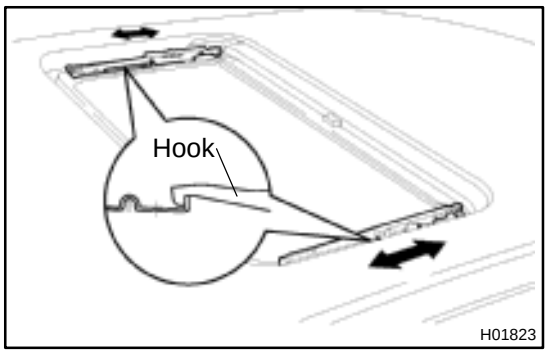

7. REINSTALL GLASS PANEL

REASSEMBLY

Reassembly is in the reverse order of disassembly (See page BO–66).

BO0M0–01

INSTALLATION

Installation is in the reverse order of removal (See page BO–65).

NOTICE:

Check and adjust the sliding roof after installation (See page BO–62).

INSTRUMENT PANEL

COMPONENTS

BO0MB–01

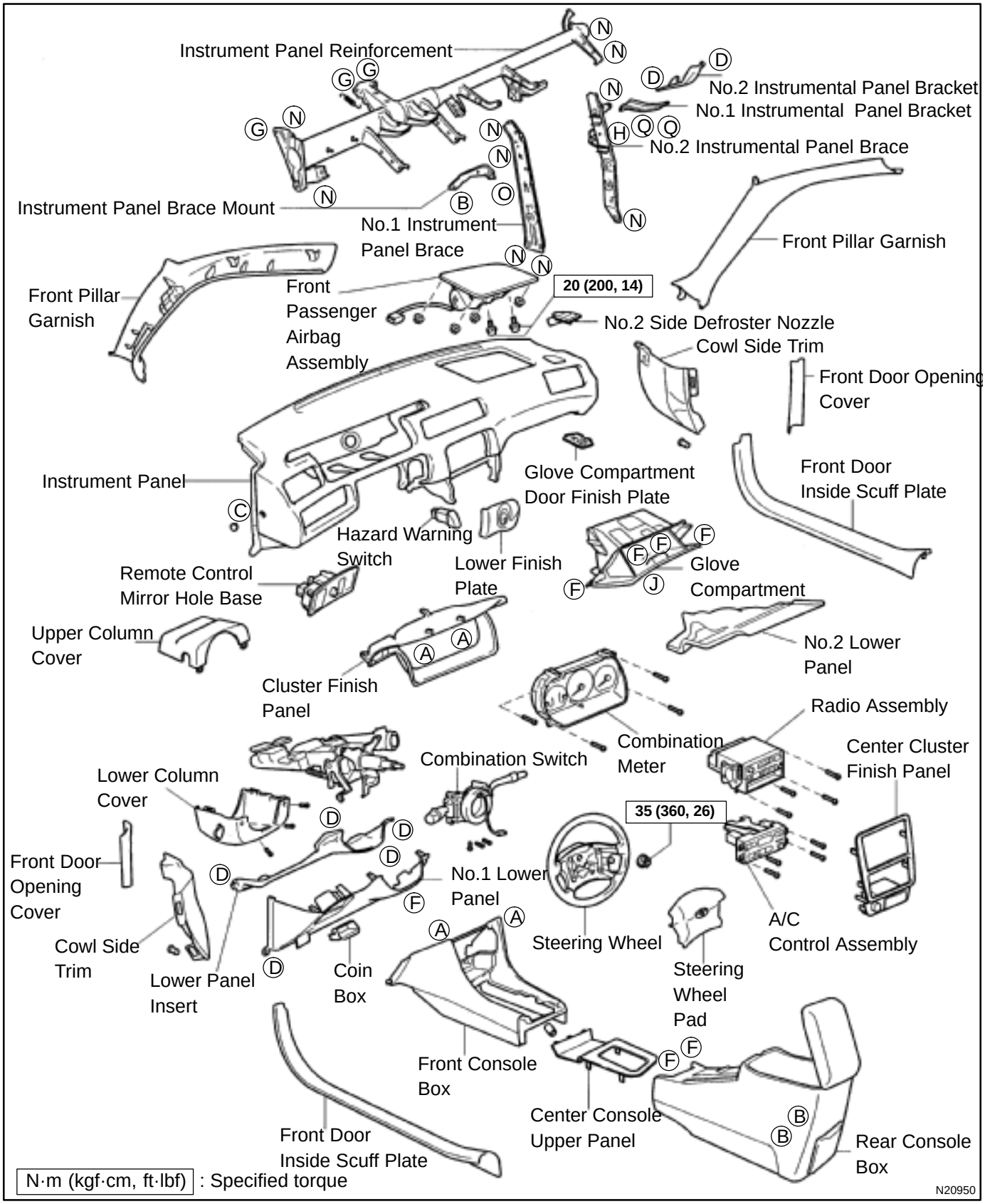

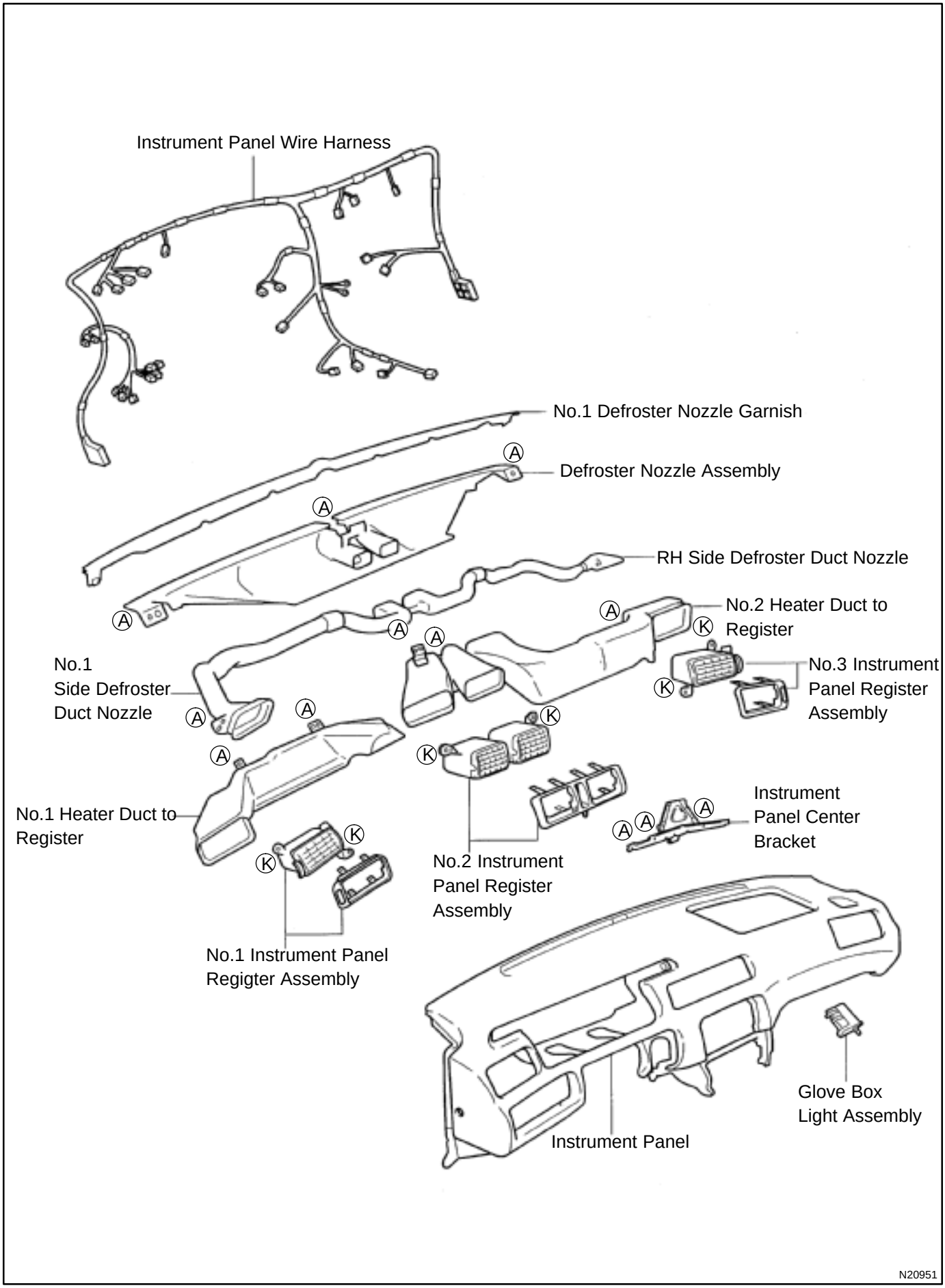
Instrument Panel Wire Harness
No.1 Defroster Nozzle Garnish
Defroster Nozzle Assembly
RH Side Defroster Duct Nozzle
No.2 Heater Duct to Register
No.1 Side Defroster Duct Nozzle
No.3 Instrument Panel Register Assembly
No.1 Heater Duct to Register
Instrument Panel Center Bracket
No.2 Instrument Panel Register Assembly
No.1 Instrument Panel Regigter Assembly
Glove Box Light Assembly
Instrument Panel
N20951

HINT:
Screw shapes and size are indicated in the table below. The code (”A”–”P”) correspond to those indicated on the previous page.

mm (in.)

Code	Shape	Size	Code	Shape	Size	Code	Shape	Size
A		ø = 5.2 (0.21) L = 16 (0.63)	B		ø = 6.0 (0.24) L = 16 (0.63)	C		ø = 6.0 (0.24) L = 20 (0.79)
D		ø = 6.0 (0.24) L = 20 (0.79)	E		ø = 5.0 (0.20) L = 10 (0.39)	F		ø = 5.2 (0.21) L = 20 (0.79)
G	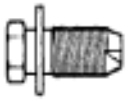	ø = 8.0 (0.31) L = 22 (0.87)	H		ø = 6.0 (0.24) L = 20 (0.79)	I		ø = 6.0 (0.24) L = 20 (0.79)
J		ø = 6.0 (0.24) L = 18 (0.79)	K		ø = 5.0 (0.20) L = 14 (0.55)	L		ø = 5.0 (0.20) L = 12 (0.47)
M		ø = 8.0 (0.31) L = 18 (0.17)	N		8 x 1.25	O		6 x 1.00
P		6 x 1.00						

H01983

BO0MC–01

REMOVAL

1. REMOVE THESE PARTS:

HINT:

Tape a screwdriver tip before use.

(a) Front door inside scuff plates
(b) Cowl side trims
(c) Front pillar garnishes
(d) Front door opening covers
(e) Lower finish plate

2. REMOVE STEERING WHEEL

(See page SR–11)

3. REMOVE STEERING COLUMN COVERS

(a) Remove the steering tilt handle.
(b) Remove the 3 screws, then the upper and lower column covers.

4. REMOVE COMBINATION SWITCH

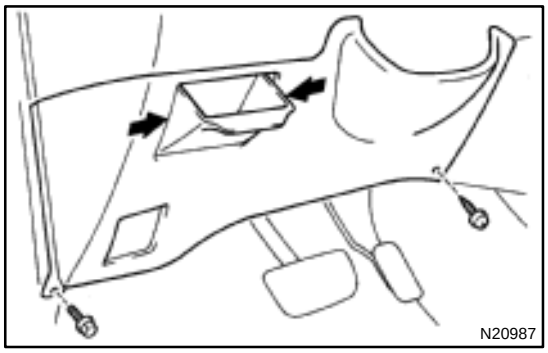
N20987

5. REMOVE No.1 LOWER PANEL

(a) Remove the 2 screws and hood lock release lever.
(b) Press on the sides of the coin box while pulling the coin box outward, and remove the coin box.
(c) Remove the screw, bolt and the No.1 lower panel.

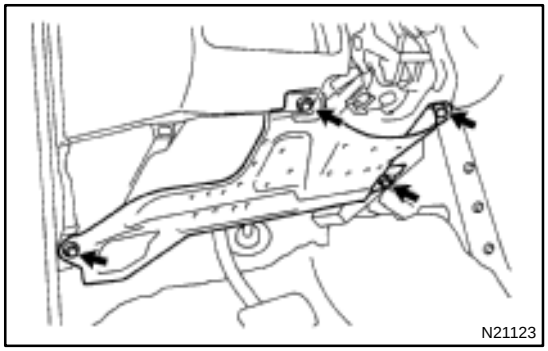
N21123

6. REMOVE LOWER PANEL INSERT

(a) Remove the 2 screws holding the DLC3 to the LH lower panel.
(b) Remove the 4 bolts, and the panel.

7. REMOVE No.2 LOWER COVER

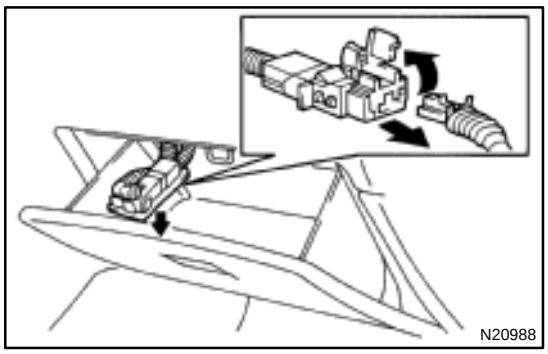

8. REMOVE GLOVE COMPARTMENT ASSEMBLY

(a) Using a screwdriver, remove the glove compartment door finish plate to the glove compartment box inside.

NOTICE:

When handling the airbag connector, be careful not to damage the airbag wire harness.

HINT:

Tape the screwdriver tip before use.

(b) Pull up and disconnect the airbag connector.

(c) Remove the 4 screws, bolt and glove compartment assembly.

9. REMOVE CENTER CONSOLE UPPER PANEL

Using a screwdriver, remove the panel, then disconnect the connector.

HINT:

Tape the screwdriver tip before use.

10. REMOVE REAR CONSOLE BOX

Remove the 2 bolts, 2 screws and the console box.

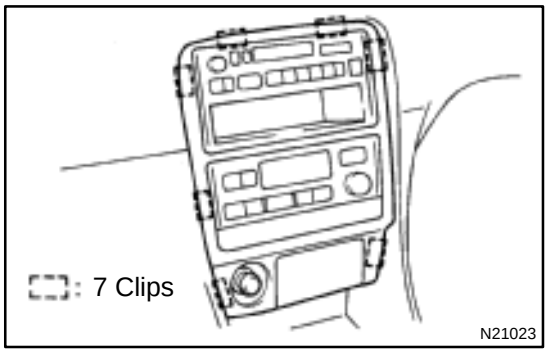

11. REMOVE CENTER CLUSTER FINISH PANEL

Using a screwdriver, remove the panel, then disconnect the connector.

HINT:

Tape the screwdriver tip before using.

12. REMOVE FRONT CONSOLE BOX

Remove the 2 screws and the front console box.

13. REMOVE RADIO ASSEMBLY

14. REMOVE A/C CONTROL ASSEMBLY

(See page AC–82)

15. REMOVE HAZARD WARNING SWITCH

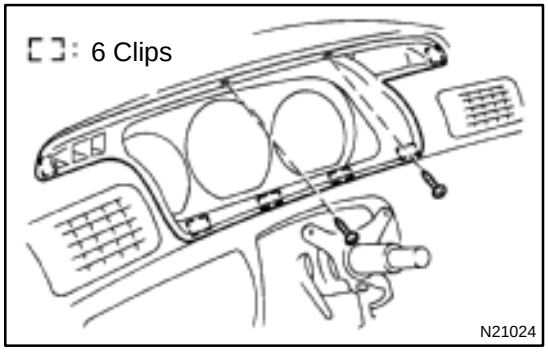

16. REMOVE CLUSTER FINISH PANEL

(a) Remove the 2 screws.

(b) Using a screwdriver, remove the panel.

HINT:

Tape the screwdriver tip before use.

17. REMOVE COMBINATION METER

18. REMOVE REMOTE CONTROL MIRROR HOLE BASE

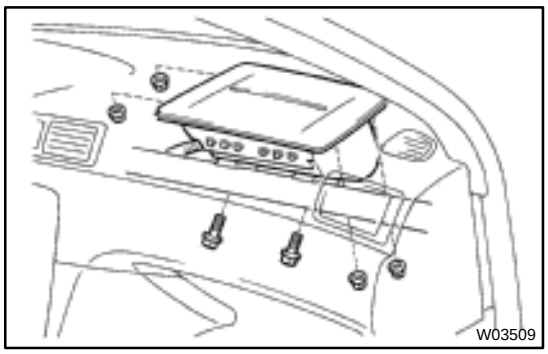

19. REMOVE FRONT PASSENGER AIRBAG ASSEMBLY (See page RS–28)

Remove the 2 bolts, 4 nuts and the front passenger airbag assembly.

Torque:
Bolt: 20 N·m (200 kgf·cm, 14 ft·lbf)

CAUTION:

- **Store the front passenger airbag door facing upward (never downward).**
- **Never disassemble the front passenger airbag assembly.**

NOTICE:

The 2 bolts to the instrument panel have been anti–rust treated. After removing the front passenger airbag assembly, always replace the bolts and nuts with new ones.

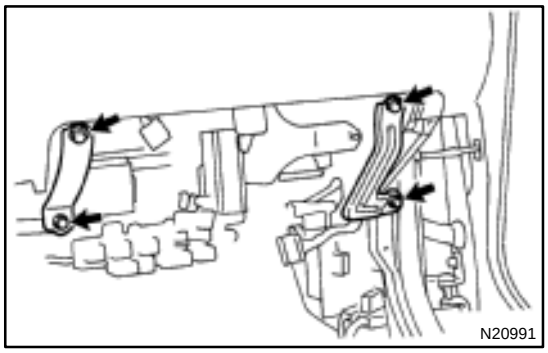

20. REMOVE No.1 AND No.2 INSTRUMENT PANEL BRACKETS

Remove the 4 bolts and the No.1 and No.2 panel brackets.

21. REMOVE NO.2 SIDE DEFROSTER NOZZLE

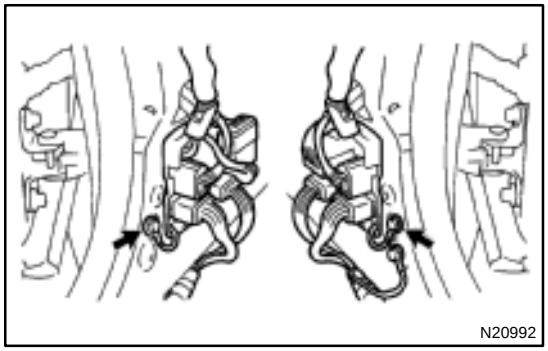

22. REMOVE INSTRUMENT PANEL ASSEMBLY

(a) Disconnect the connectors from the LH and RH connector holders.
(b) Remove the bolts holding the ground wire to the body.
(c) Remove the connector holder from the body.

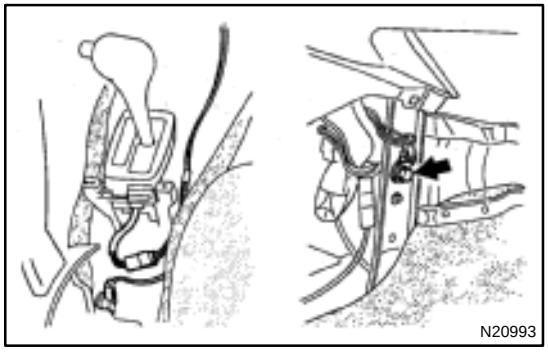

(d) Disconnect the connectors.
(e) Remove the bolt holding the ground wire to the No.2 instrument panel brace.

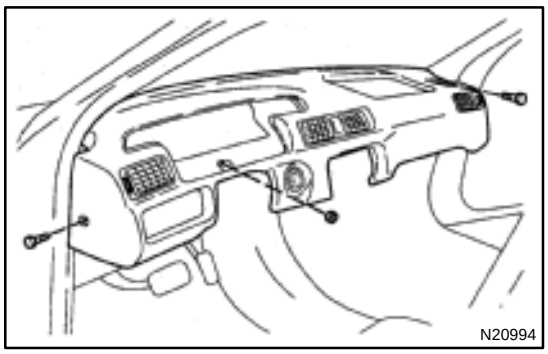

(f) Remove the bolt, nut, screw and the instrument panel assembly.

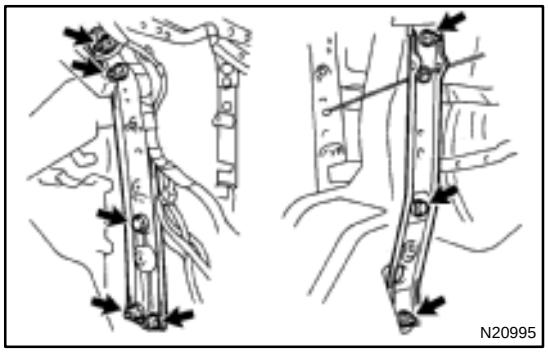

23. REMOVE INSTRUMENT PANEL BRACES

(a) Remove the wire brackets and connector.
(b) Remove the bolt and connector from the No.1 instrument panel brace.
(c) w/ Wireless Control:
Remove the nut and the wireless control unit from the No.1 instrument panel brace.
(d) Remove the nut holding the radio antenna to the No.2 instrument panel brace.
(e) Remove a nut and brace mount bracket.
(f) Remove the 6 nuts, 2 bolts and No.1 and No.2 instrument panel braces.

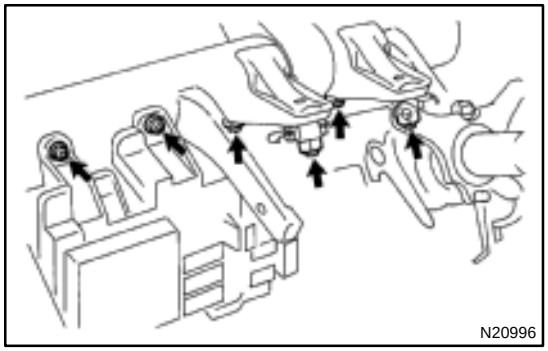

24. REMOVE INSTRUMENT PANEL REINFORCEMENT

(a) Remove the connectors from the steering column tube.
(b) Remove the 4 wire brackets and connectors.
(c) Remove the 2 nuts and bolt holding the No.1 Junction Box (J/B) to the reinforcement.
(d) Remove the 4 nuts and the steering column from the reinforcement.
(e) Remove the brake pedal spring from the reinforcement and brake pedal.

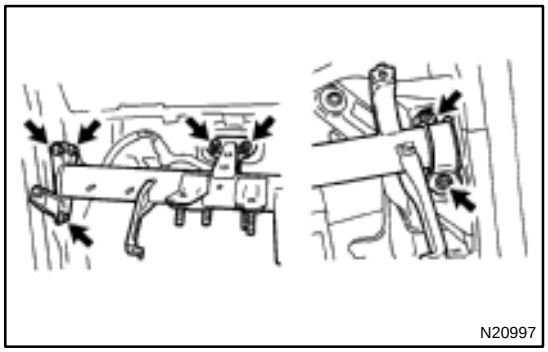

(f) Remove the 4 nuts, 3 bolts and the reinforcement.

BO0MD–01

DISASSEMBLY

1. REMOVE THESE PARTS:

(a) No.1 defroster nozzle garnish
(b) No.1 defroster nozzle
(c) RH side defroster duct nozzle
(d) No.1 side defroster duct nozzle
(e) No.1 heater duct to register
(f) No.2 heater duct to register
(g) No.2 register assembly
(h) No.3 register assembly
(i) No.1 register assembly

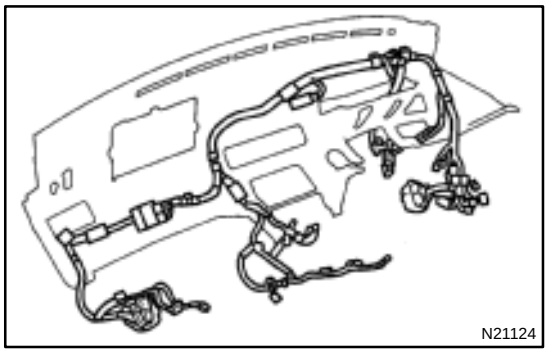
N21124

2. REMOVE INSTRUMENT PANEL WIRE HARNESS

Remove the 2 brackets, 8 clips and wire harness.

3. REMOVE INSTRUMENT PANEL CENTER BRACKET

4. REMOVE THESE PARTS:

(a) Clock unit
(b) Glove box light assembly

BO0ME–01

REASSEMBLY

Reassembly is in the reverse order of disassembly (See page BO–79).

INSTALLATION

Reassembly is in the reverse order of removal (See page BO–75).

ROOF HEADLINING

BO0MG–01

COMPONENTS

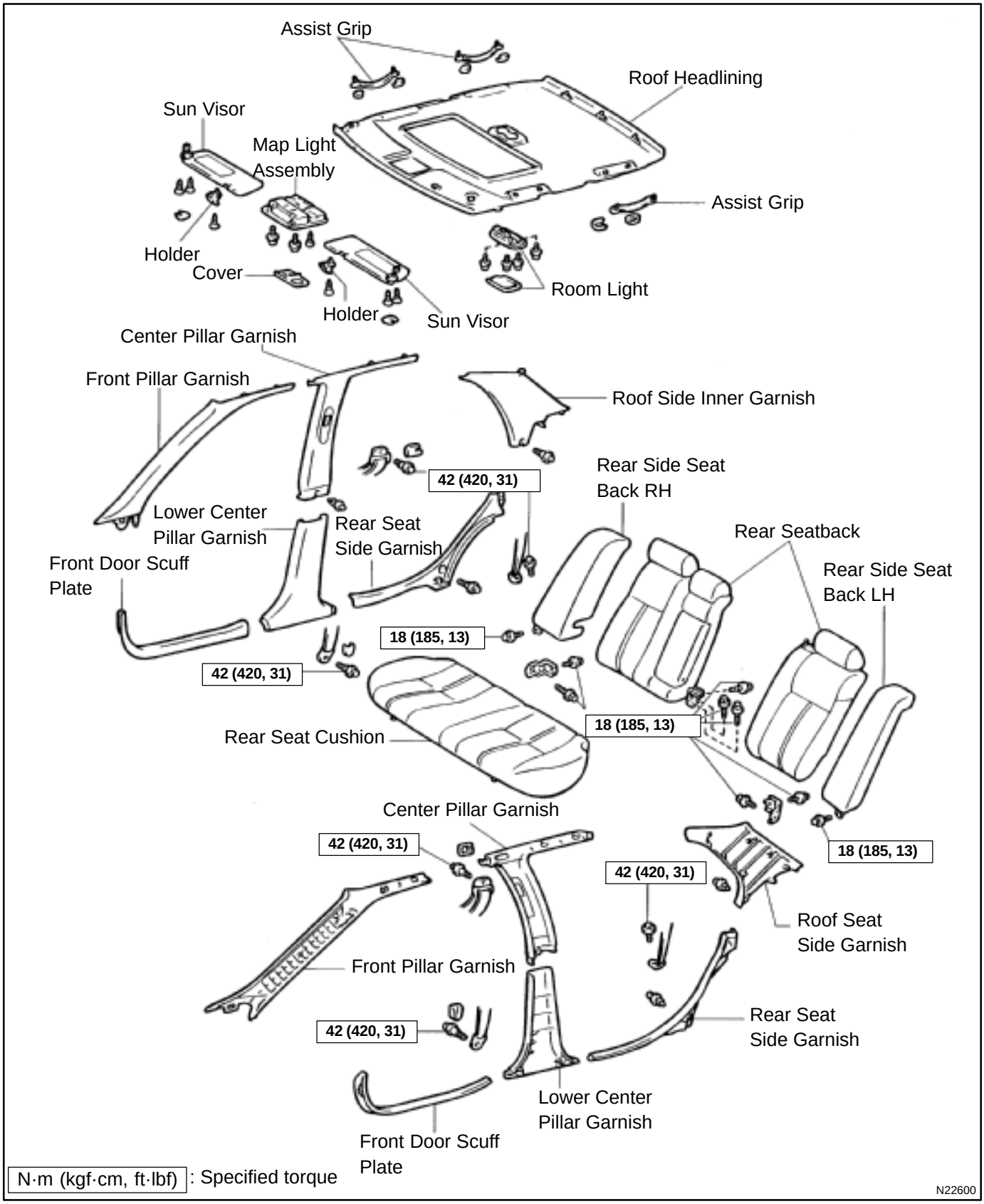

BO0MH–01

REMOVAL

1. REMOVE THESE PARTS:

(a) Rear seat cushion
(b) Rear seatback and rear side seatbacks
(c) Front door scuff plates
(d) Front seat belt shoulder anchor bolts
(e) Sun visor and holders
(f) Assist grips
(g) Front pillar garnishes
(h) Rear door scuff plates
(i) Lower center pillar garnishes

2. REMOVE ROOF SIDE INNER GARNISH
(See page BO–28)

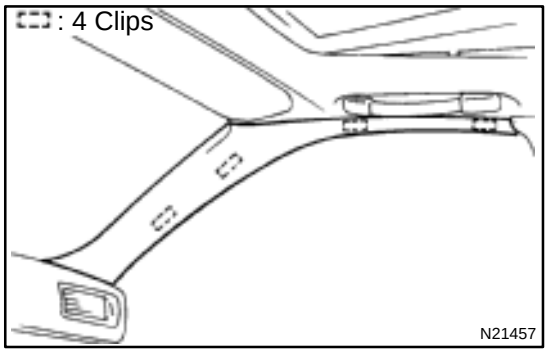

3. REMOVE FRONT PILLAR GARNISH

(a) Pry out clips by your hand.
(b) Pull the garnish upward to remove it.

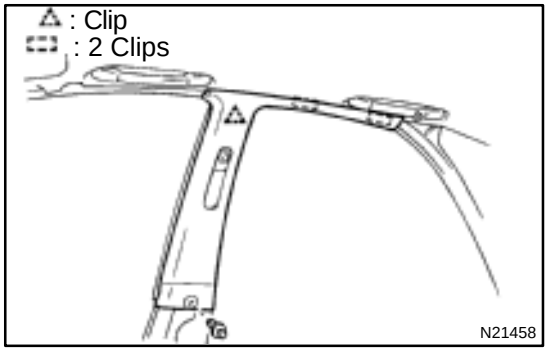

4. REMOVE CENTER PILLAR GARNISH

(a) Remove the clip.
(b) Pry off the garnish.

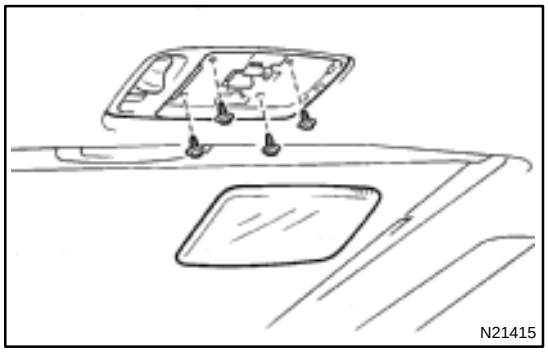

5. REMOVE ROOM LIGHT

(a) Using a screwdriver, remove the room light cover.

HINT:

Tape the screwdriver tip before use.

(b) Remove the 4 screws, then disconnect the connector.

6. REMOVE MAP LIGHT ASSEMBLY

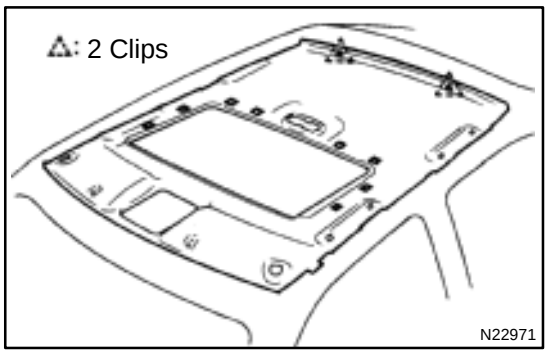

7. REMOVE ROOF HEADLINING

(a) Remove the 2 clips from the roof panel rear end.
(b) Remove the headlining.
(c) Bring out the headlining.

BO0MI–01

INSTALLATION

Installation is in the reverse order of removal (See page BO–83).

BO0MI–01

INSTALLATION

Installation is in the reverse order of removal (See page BO–83).

FRONT SEAT (Power Seat for TMC Made)

BO0MJ–01

COMPONENTS

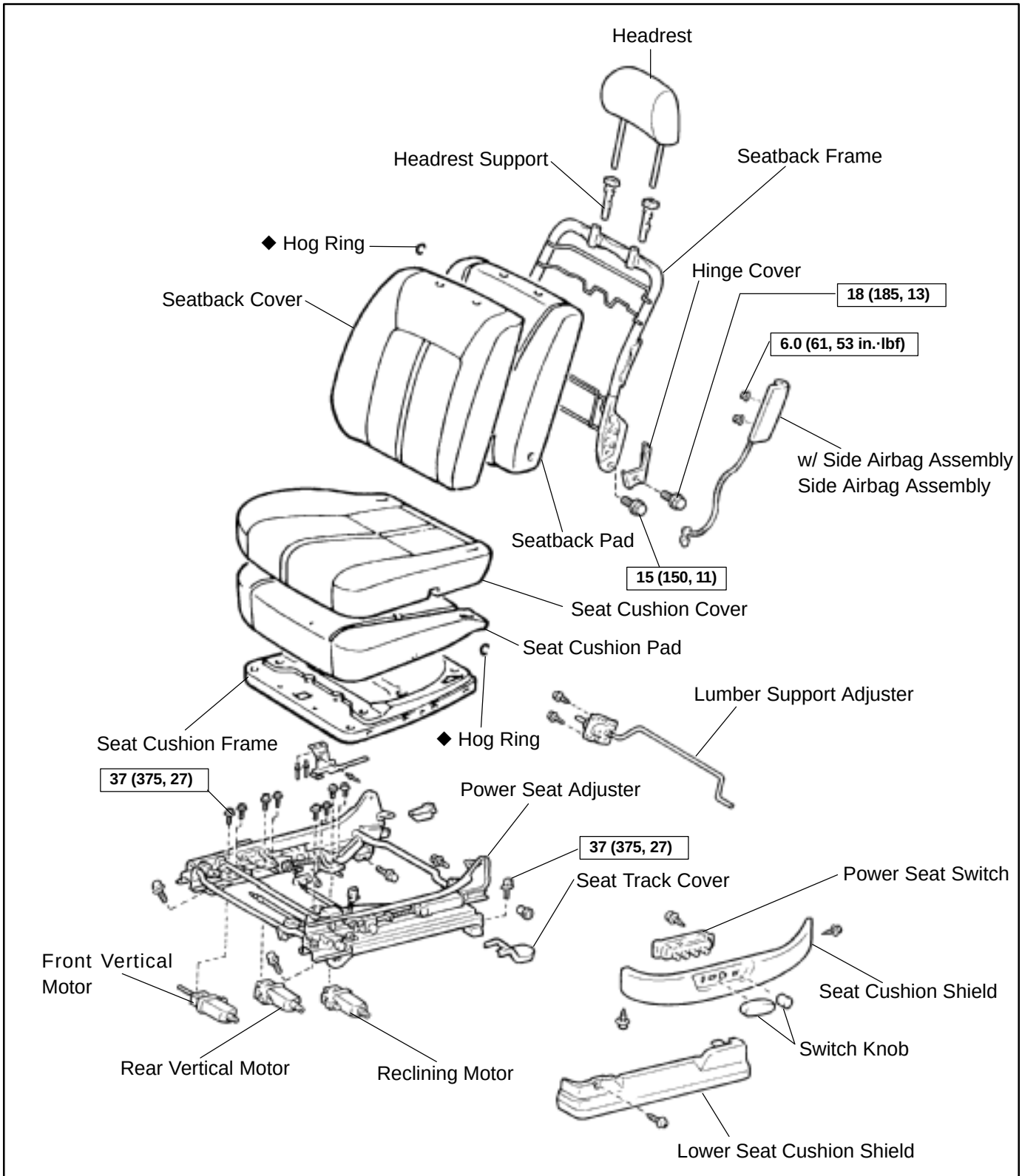

N·m (kgf·cm, ft·lbf) : Specified torque

◆ Non–reusable part

H01977

BO0MK–01

REMOVAL

REMOVE FRONT SEAT

(a) Using a screwdriver, remove the seat track covers.

HINT:

Tape the screwdriver tip before use.

(b) Remove the 4 bolts.

(c) Disconnect the connector.

(d) Remove the front seat.

NOTICE:

Be careful not to damage the body.

BO0ML–01

DISASSEMBLY

1. REMOVE THESE PARTS:

(a) Headrest
(b) Switch knobs
(c) Seat cushion shield
(d) Lower seat cushion shield
(e) Power seat switch

2. REMOVE SEATBACK ASSEMBLY

(a) Remove the 3 clips of the side airbag wire harness from the seat cushion frame.
(b) Remove the 4 bolts and seatback assembly.

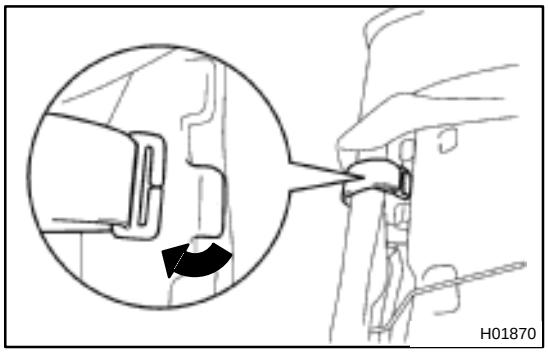

3. REMOVE SEATBACK COVER

(a) Remove the hog rings and hooks.
(b) Remove the hook as shown in the illustration.
(c) Remove the headrest supports.
(d) Remove the hog rings and seatback frame from seatback cover with pad.
(e) Remove the hog rings and seatback cover from seatback pad.

4. REMOVE SIDE AIRBAG ASSEMBLY

Remove the 1 clip of side airbag wire harness, 2 nuts and side airbag assembly from the seatback frame.

CAUTION:

- **Do not store the side airbag assembly with the airbag deployment direction facing down.**
- **Never disassemble the side airbag assembly.**

5. REMOVE LUMBER SUPPORT ADJUSTER

Remove the 2 screws and lumber support adjuster.

6. REMOVE SEAT CUSHION ASSEMBLY

Remove the 4 bolts and seat cushion assembly.

7. REMOVE SEAT CUSHION COVER

(a) Remove the 2 clips, hook and seat cushion frame from seat cushion cover with pad.
(b) Remove the hog rings and seat cushion cover from the seat cushion pad.

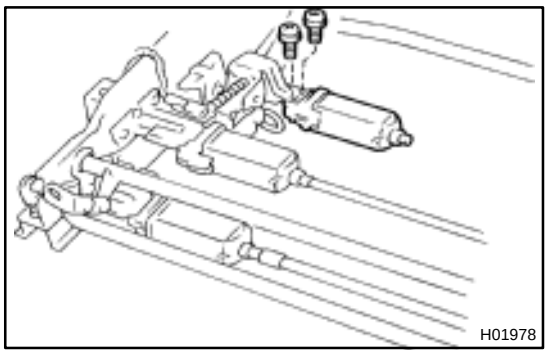

8. REMOVE REAR VERTICAL MOTOR

Remove the 2 screws and front vertical motor.

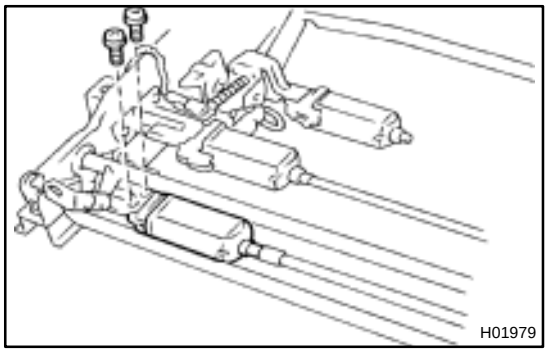

9. REMOVE SLIDE MOTOR

(a) Remove the 2 screws.

(b) Disconnect the No.1 drive cable, then remove the slide motor.

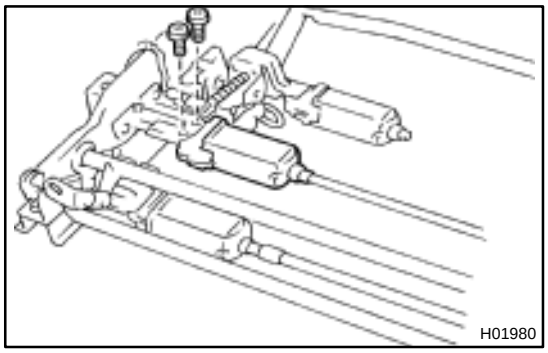

10. REMOVE RECLINING MOTOR

(a) Remove the 2 screws.

(b) Disconnect the No.2 drive cable, then remove the reclining motor.

BO0MM–01

REASSEMBLY

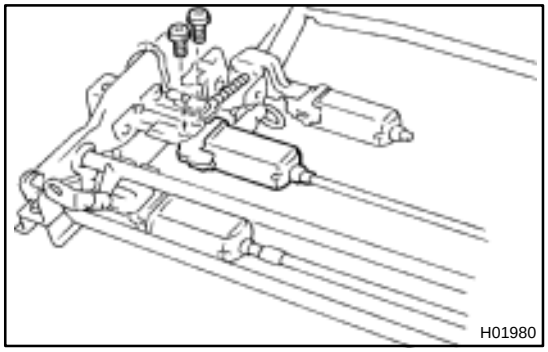

1. INSTALL RECLINING MOTOR

Connect the No.2 drive cable, then install the reclining motor with 2 screws.

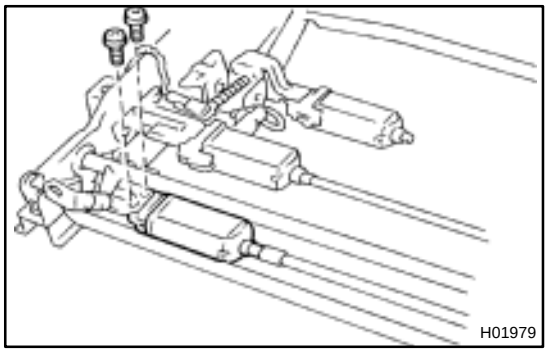

2. INSTALL SLIDE MOTOR

Connect the No.1 drive cable, then install the slide motor with 2 screws.

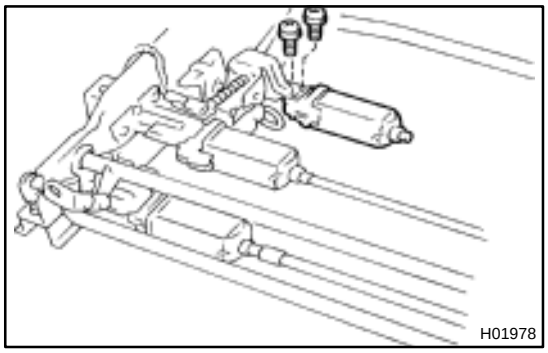

3. INSTALL REAR VERTICAL MOTOR

Install the front vertical motor with 2 screws.

4. INSTALL LOWER SEAT CUSHION SHIELD

5. INSTALL SEAT CUSHION COVER

(a) Install the seat cushion cover with new hog rings to seat cushion pad.

(b) Install the seat cushion cover with pad to the seat cushion frame with hook and 2 clips.

HINT:

Install the hog rings to prevent wrinkles as least as possible.

6. INSTALL SEAT CUSHION ASSEMBLY

Install the seat cushion assembly with 4 bolts.

7. INSTALL SIDE AIRBAG ASSEMBLY

Install the side airbag assembly with 2 new nuts and 1 clip of side airbag wire harness to the seatback frame.

Torque: 6.0 N·m (61 N·m, 53 in.·lbf)

NOTICE:

- **Make sure that the side airbag assembly is installed to the specified torque.**
- **If the side airbag assembly has been dropped, or there are cracks, dents or other defects in the case or connector, replace the side airbag assembly with a new one.**

8. INSTALL SEATBACK COVER

(a) Install the seatback cover with new hog rings to the seatback pad.

(b) Install the seatback cover with pad to the seatback frame with new hog rings.

(c) Install the headrest supports.

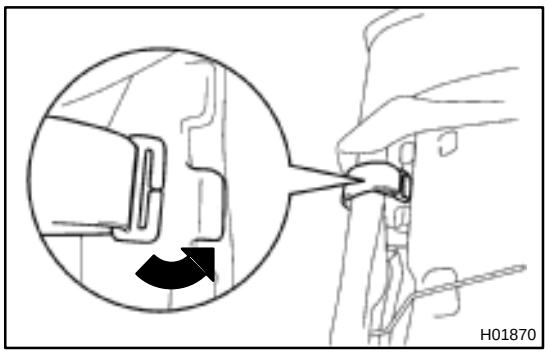

(d) Hang the hook onto the seatback frame.

CAUTION:

Take care to hung the hook securely. Otherwise the seat cover slides, it might cause incorrect deploying.

9. INSTALL SEATBACK ASSEMBLY

(a) Install the seatback assembly with 4 bolts.

(b) Install the 2 clips of the side airbag wire harness to the seat cushion frame.

(c) Install a new hog rings and 7 hooks.

HINT:

Install the hog rings to prevent wrinkles as least as possible.

10. INSTALL THESE PARTS:

(a) Power seat switch

(b) Lower Seat cushion shield

(c) Seat cushion shield

(d) Switch knobs

(e) Headrest

BO0MN–01

INSTALLATION

Installation is in the reverse order of removal (See page BO–87).

FRONT SEAT (Power Seat for TMMK Made)

BO0MU–01

COMPONENTS

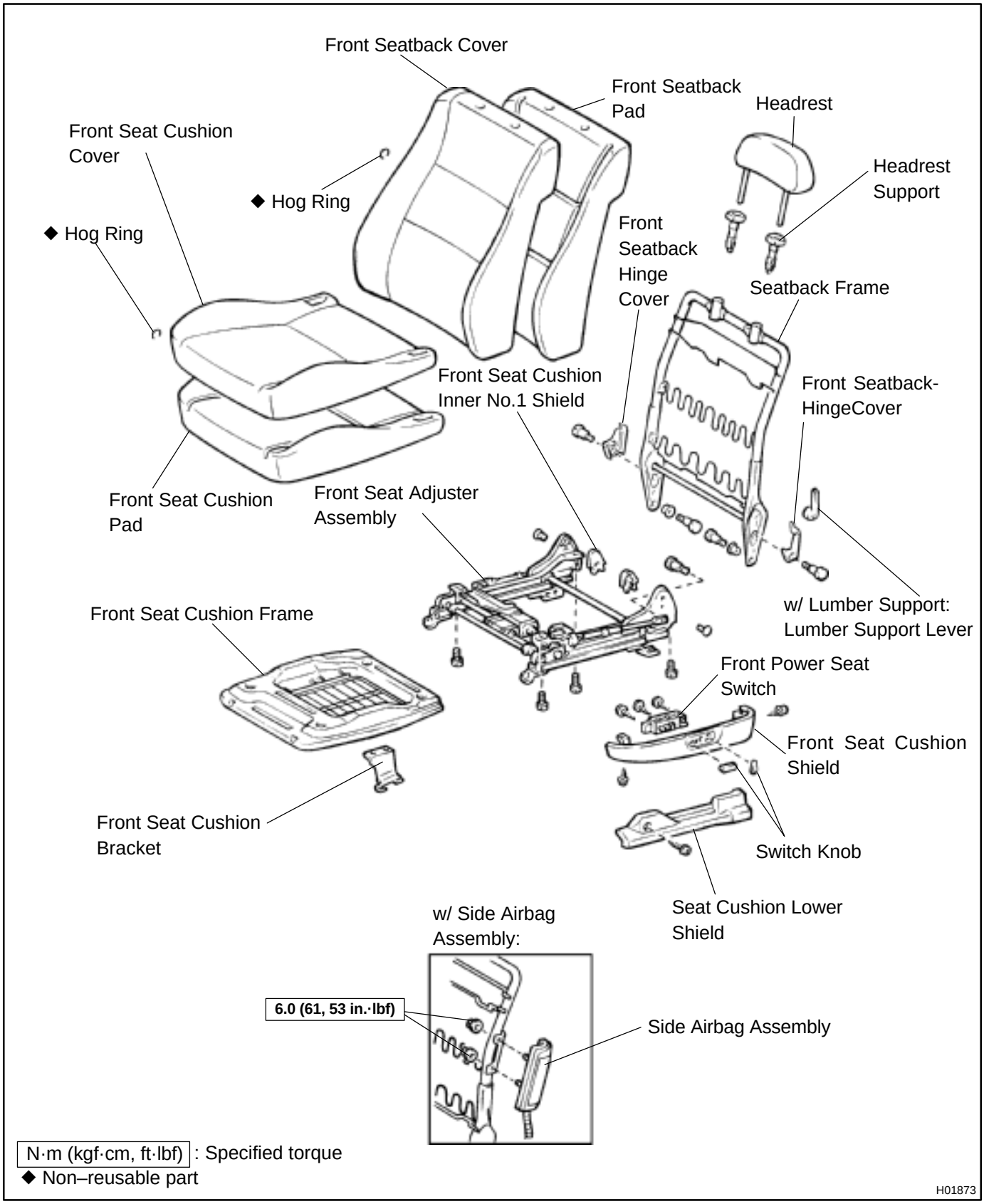

N·m (kgf·cm, ft·lbf) : Specified torque
◆ Non–reusable part

H01873

BO0MV–01

REMOVAL

REMOVE FRONT SEAT

(a) Using a screwdriver, remove the seat track covers.

HINT:

Tape the screwdriver tip before use.

(b) Remove the 4 bolts.

(c) w/ Side Airbag Assembly:
Disconnect the connector.

(d) Disconnect the front power seat connector.

(e) Remove the front seat.

NOTICE:

Be careful not to damage the body.

BO0MW–01

DISASSEMBLY

1. REMOVE THESE PARTS:

(a) Switch knob
(b) Front seat cushion shield
(c) Front power seat switch
(d) Seat cushion lower shield
(e) w/ Lumber Support:
Lumber support lever
(f) Headrest
(g) Front seat inner belt

2. REMOVE SEATBACK ASSEMBLY

(a) w/ Side Airbag Assembly:
Remove the side airbag wire harness after removing clips.
(b) Remove the hog rings.
(c) Remove the bolts and front seatback hinge cover.
(d) Remove the seatback assembly.

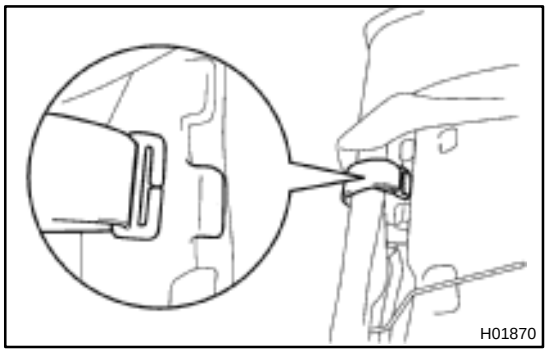
H01870

3. REMOVE SEATBACK COVER

(a) w/ Side Airbag Assembly:
Remove the hook from the seatback frame.
(b) Remove the headrest supports.
(c) Remove the seatback frame from the seatback cover with pad.
(d) Remove the seatback cover from the seatback pad.

4. w/ Side Airbag Assembly:
REMOVE SIDE AIRBAG ASSEMBLY

Remove the 2 nuts and side airbag assembly from the seatback frame.

CAUTION:

- **Do not store the side airbag assembly with the airbag deployment direction facing down.**
- **Never disassemble the side airbag assembly.**

5. REMOVE SEAT CUSHION ASSEMBLY

Remove the 4 bolts and seat cushion assembly from the seat adjuster.

6. REMOVE SEAT CUSHION COVER

(a) Remove the seat cushion frame.
(b) Remove the seat cushion cover from the seat cushion pad.

7. REMOVE THESE PARTS:

(a) Front seat cushion inner No.1 shield
(b) Front seat cushion bracket
(c) Front seat cushion inner shield

BO0MX–01

REASSEMBLY

1. INSTALL THESE PARTS:

(a) Front seat cushion inner shield

(b) Front seat cushion bracket

(c) Front seat cushion inner No.1 shield

2. INSTALL SEAT CUSHION COVER

(a) Install the seat cushion cover to seat cushion pad.

(b) Install the seat cushion cover with pad to the seat cushion frame.

3. INSTALL SEAT CUSHION ASSEMBLY

Install the seat cushion assembly with 4 bolts to the seat adjuster.

HINT:

Tighten the 4 bolts temporarily, then from the bolts on the rear side tighten completely.

4. w/ Side Airbag Assembly:

INSTALL SIDE AIRBAG ASSEMBLY

Install the side airbag assembly with 2 nuts to the seatback frame.

Torque: 6.0 N·m (61 kgf·cm, 53 in.·lbf)

NOTICE:

- **Make sure that the side airbag assembly is installed to the specified torque.**
- **If the side airbag assembly has been dropped, or there are cracks, dents or other defects in the case or connector, replace the side airbag assembly with a new one.**
- **When installing the side airbag assembly, take care is not pinched between other parts.**

5. INSTALL SEATBACK COVER

(a) Install the seatback cover to the seatback pad.

(b) Install the seatback cover with pad to the seatback frame.

(c) Install the headrest supports.

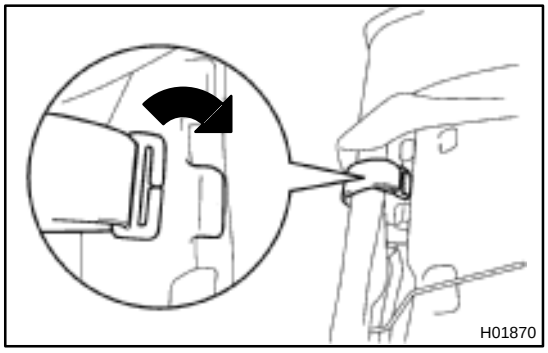

(d) w/ Side Airbag Assembly:

Hang the hook on to the seatback frame.

CAUTION:

Take care to hung the hook securely. Otherwise the seat cove slides, it might cause incorrect deploying.

6. INSTALL SEATBACK ASSEMBLY

(a) Install the seatback assembly with 4 bolts.

HINT:

Tighten the 4 bolts temporarily, then from the bolt on the front right side tighten completely.

(b) Install Front Seatback hinge cover with bolts.

(c) Install a new hog rings.

HINT:

Install the hog rings to prevent wrinkles as least as possible.

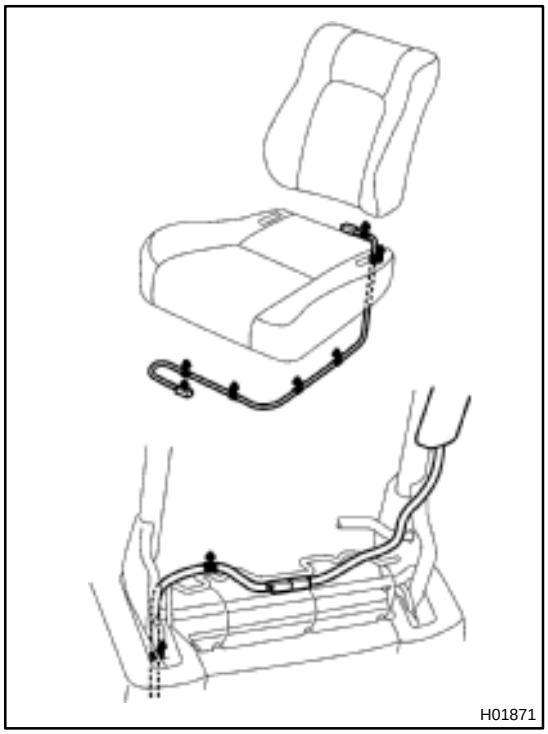

(d) w/ Side Airbag Assembly:
Securely fix the side airbag wire harness to seat cushion by clips.

7. INSTALL THESE PARTS:

(a) Front seat inner belt

(b) Headrest

(c) w/ Lumber Support:
Lumber support lever

(d) Seat cushion lower shield

(e) Front power seat switch

(f) Front seat cushion shield

(g) Switch knob

BO0MY–01

INSTALLATION

INSTALL FRONT SEAT

(a) Mount the seat to the vehicle.

(b) w/ Side Airbag:
Connect the connector.

(c) Connect the front power seat connector.

(d) Tighten the bolts on the rear side temporarily, from the bolt on the inner side tighten completely.

(e) Slide the seat to the most rear position to install the bolts on the front side.

FRONT SEAT (Manual Seat for TMC Made)

BO0MZ–01

COMPONENTS

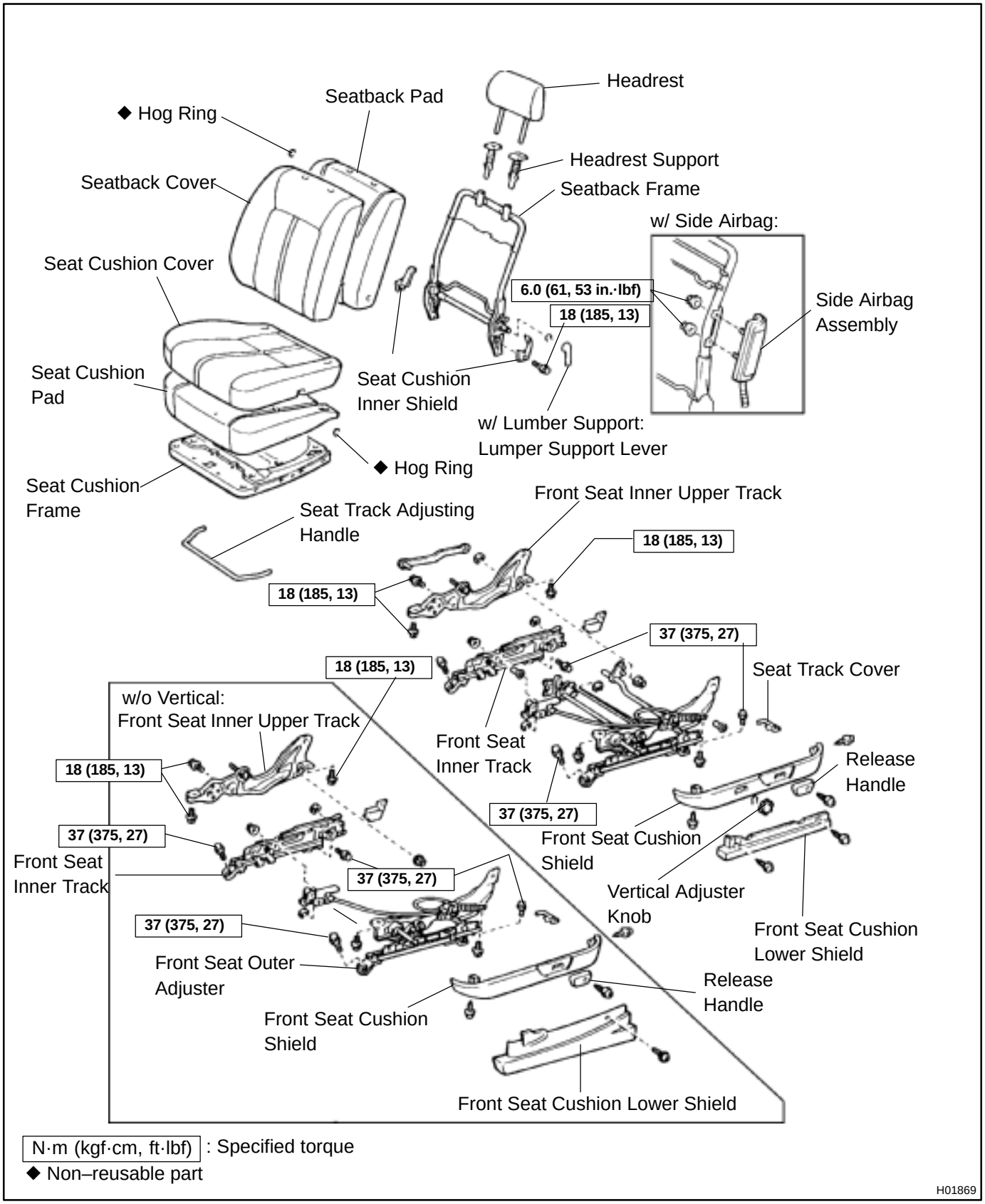

N·m (kgf·cm, ft·lbf) : Specified torque

◆ Non–reusable part

H01869

BO0N0–01

REMOVAL

REMOVE FRONT SEAT

(a) Using a screwdriver, remove the seat track outer cover.

HINT:

Tape the screwdriver tip before use.

(b) Remove the 4 bolts.

(c) w/ Side Airbag Assembly:
Disconnect the connector.

(d) Remove the front seat.

NOTICE:

Be careful not to damage the body.

BO0N1–01

DISASSEMBLY

1. REMOVE THESE PARTS:

(a) Release handle
(b) Front seat cushion shield
(c) Vertical Seat Adjuster:
Vertical adjuster knob
(d) Front seat cushion lower shield
(e) Seat cushion inner shield
(f) w/ Lumber Support:
Lumber support lever
(g) Headrest
(h) Front seat inner belt

2. REMOVE SEATBACK ASSEMBLY

(a) w/ Side Airbag Assembly:
Remove the side airbag wire harness after removing clips.
(b) Remove the bolts and seatback assembly.

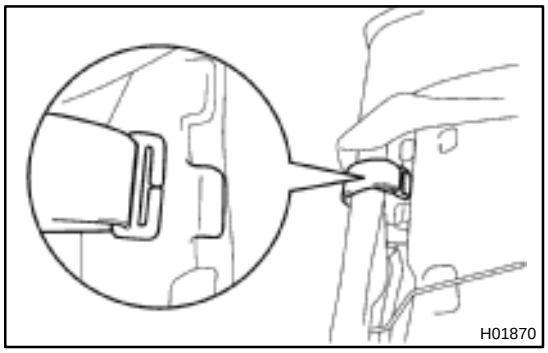

3. REMOVE SEATBACK COVER

(a) Remove the hog rings.
(b) w/ Side Airbag Assembly:
Remove the hook from the seatback frame.
(c) Remove the headrest supports.
(d) Remove the seatback frame from the seatback cover with pad.
(e) Remove the seatback cover from the seatback pad.

4. w/ Side Airbag Assembly:
REMOVE SIDE AIRBAG ASSEMBLY

Remove the 1 clip of side airbag wire harness, 2 nuts and side airbag assembly from the seatback frame.

CAUTION:

- **Do not store the side airbag assembly with the airbag deployment direction facing down.**
- **Never disassemble the side airbag assembly.**

5. REMOVE SEAT CUSHION ASSEMBLY

Remove the 4 bolts and seat cushion assembly from the seat adjuster.

6. REMOVE SEAT CUSHION COVER

(a) Remove the seat cushion frame.
(b) Remove the seat cushion cover from the seat cushion pad.

7. REMOVE SEAT TRACK ADJUSTING HANDLE

Remove the seat track handle.

8. REMOVE FRONT SEAT OUTER ADJUSTER

Remove the E ring and front seat outer adjuster from the front seat inner truck with upper track.

BO0N2–01

INSPECTION

INSPECT RECLINING LOCK POSITION AND SLIDING LOCK POSITION SLIPPING OFF

(a) When reclining the seat, inspect that the outer and inner tracks are released at the same time.

HINT:

When the reclining lock positions slip off, disassemble the seat to adjust the position.

(b) When sliding the seat, inspect that the outer and inner tracks are locked at the same time.

HINT:

When sliding lock positions slip off, loosen the bolts to adjust the position.

BO0N3–01

REASSEMBLY

1. Vertical Seat Adjuster:

INSTALL FRONT SEAT OUTER ADJUSTER

Install front seat outer adjuster to front seat inner adjuster with E ring, nuts and bolts.

2. w/o Vertical Seat Adjuster:

INSTALL FRONT SEAT OUTER AND INNER ADJUSTER

Install the adjusters to the seat cushion frame.

3. INSTALL SEAT TRACK ADJUSTING HANDLE

Install the seat track adjusting handle.

4. Vertical Seat Adjuster:

INSTALL SEAT CUSHION COVER

(a) Install the seat cushion cover to seat cushion pad.

(b) Install the seat cushion cover with pad to the seat cushion frame.

5. INSTALL SEAT CUSHION ASSEMBLY

Install the seat cushion assembly with 4 bolts to the seat adjuster.

HINT:

Tighten the 4 bolts temporarily, then from the bolts on the rear side tighten completely.

Torque: 18 N·m (185 kgf·cm, 13 ft·lbf)

6. w/ Side Airbag Assembly:

INSTALL SIDE AIRBAG ASSEMBLY

Install the side airbag assembly with new 2 nuts to the seatback frame.

Torque: 6.0 N·m (61 kgf·cm, 53 in.·lbf)

NOTICE:

- **Make sure that the side airbag assembly is installed to the specified torque.**
- **If the side airbag assembly has been dropped, or there are cracks, dents or other defects in the case or connector, replace the side airbag assembly with a new one.**
- **When installing the side airbag assembly, take care is not pinched between other parts.**

7. INSTALL SEATBACK COVER

(a) Install the seatback cover to the seatback pad.

(b) Install the seatback cover with pad to the seatback frame.

(c) Install the headrest supports.

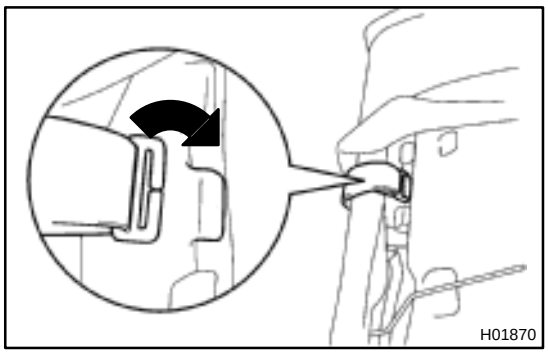

(d) w/ Side Airbag Assembly:
Hang the hook on to the seatback frame.

CAUTION:
Take care to hung the hook securely. Otherwise the seat cover slides, it might cause incorrect deploying.

8. INSTALL SEATBACK ASSEMBLY

(a) Install the seatback assembly with bolts.
Torque: 18 N·m (185 kgf·cm, 13 ft·lbf)

(b) Install new hog rings.

HINT:
Install the hog rings to prevent wrinkles as least as possible.

(c) w/ Side Airbag Assembly:
Securely fix the side airbag wire harness to seat cushion and seatback by clips.

9. INSTALL THESE PARTS:

(a) Front seat inner belt
(b) Headrest
(c) Lumber support lever
(d) Seat cushion inner shield
(e) Front seat cushion shield
(f) Vertical Seat Adjuster:
Vertical adjuster knob
(g) Front seat cushion lower shield
(h) Release handle

BO0N4–01

INSTALLATION

INSTALL FRONT SEAT

(a) Slide the front seat to the most front position.

NOTICE:

Make sure that seat adjuster locks.

(b) Without holding the seat track handle, mount the seat to the vehicle.

HINT:

If holding the seat track handle, the adjusted most front positions slip off.

(c) Tighten the bolts on the rear side temporarily, from the bolt on the inner side tighten completely.
Torque: 37 N·m (375 kgf·cm, 27 ft·lbf)

(d) Slide the seat to the most rear position to install the bolts on the front side.
Torque: 37 N·m (375 kgf·cm, 27 ft·lbf)

FRONT SEAT (Manual Seat for TMMK Made)

BO0MO–01

COMPONENTS

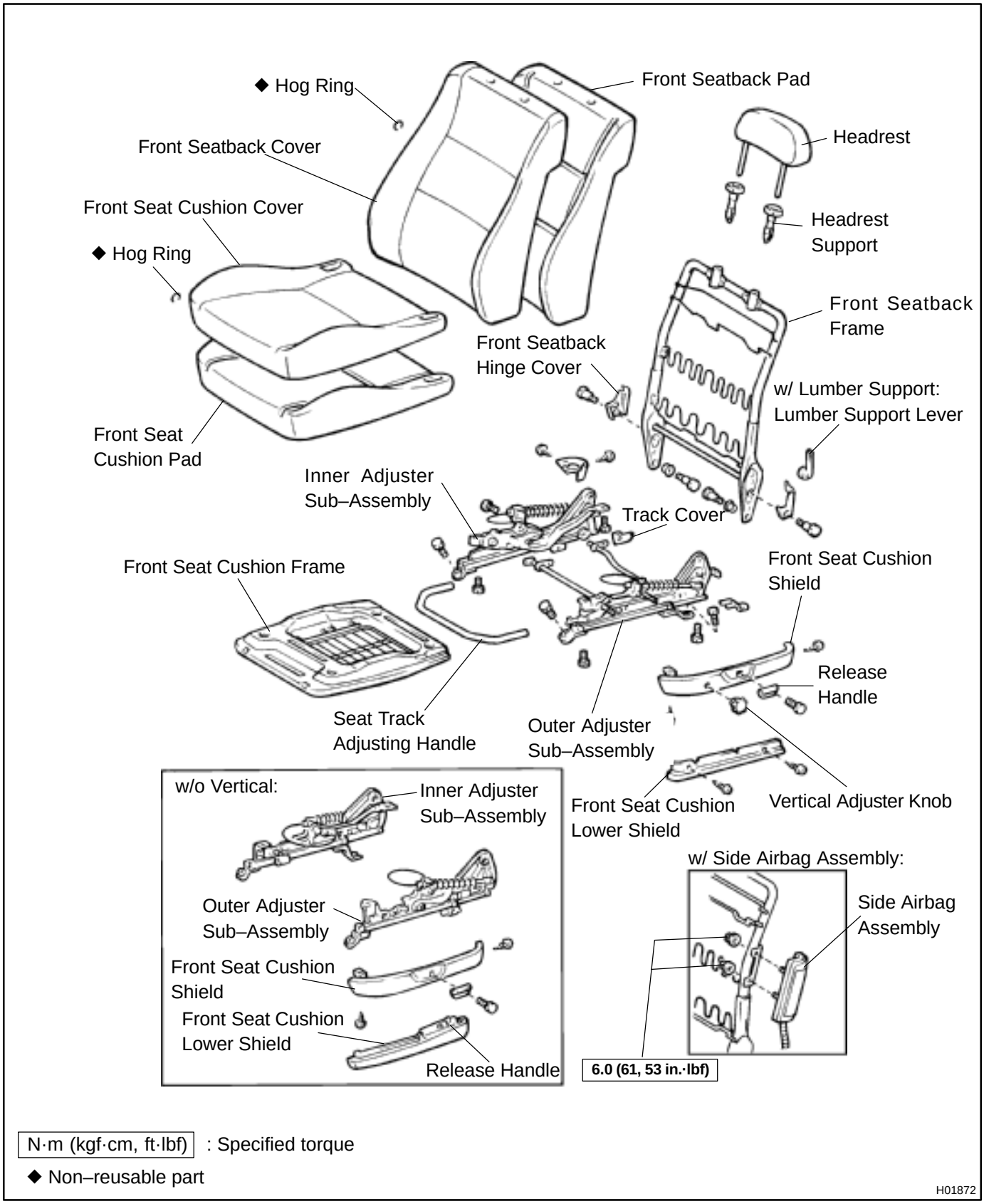

BO0MP–01

REMOVAL

REMOVE FRONT SEAT

(a) Using a screwdriver, remove the seat track covers.

HINT:

Tape the screwdriver tip before use.

(b) Remove the 4 bolts.

(c) w/ Side Airbag Assembly:
Disconnect the connector.

(d) Remove the front seat.

NOTICE:

Be careful not to damage the body.

BO0MQ–01

DISASSEMBLY

1. REMOVE THESE PARTS:

(a) Release handle
(b) Front seat cushion shield
(c) Vertical Seat Adjuster:
Vertical adjuster knob
(d) Front seat cushion lower shield
(e) Front seatback hinge cover.
(f) w/ Lumber Support:
Lumber support lever
(g) Headrest
(h) Front seat inner belt

2. REMOVE SEATBACK ASSEMBLY

(a) w/ Side Airbag Assembly:
Remove the side airbag wire harness after removing clips.
(b) Remove the hog rings.
(c) Remove the bolts and seatback assembly.

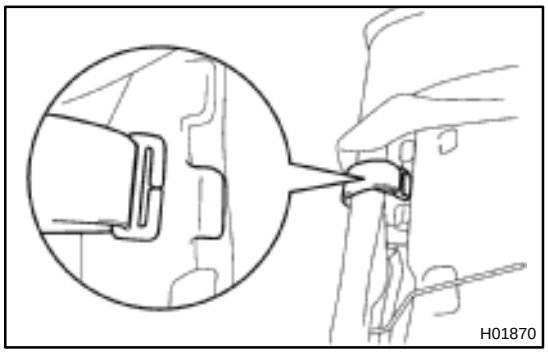
H01870

3. REMOVE SEATBACK COVER

(a) w/ Side Airbag Assembly:
Remove the hook from the seatback frame.
(b) Remove the headrest supports.
(c) Remove the seatback frame from the seatback cover with pad.
(d) Remove the seatback cover from the seatback pad.

4. w/ Side Airbag Assembly:
REMOVE SIDE AIRBAG ASSEMBLY

Remove the 2 nuts and side airbag assembly from the seatback frame.

CAUTION:

- **Do not store the side airbag assembly with the airbag deployment direction facing down.**
- **Never disassemble the side airbag assembly.**

5. REMOVE SEAT CUSHION ASSEMBLY

Remove the 4 bolts and seat cushion assembly from the seat adjuster.

6. REMOVE SEAT CUSHION COVER

(a) Remove the seat cushion frame.
(b) Remove the seat cushion cover from the seat cushion pad.

7. REMOVE RECLINING CONNECTING PIPE

Remove the reclining connecting pipe.

8. REMOVE SEAT TRACK ADJUSTING HANDLE

Remove the seat track adjusting handle.

9. REMOVE OUTER ADJUSTER SUB–ASSEMBLY

Remove the outer adjuster sub–assembly from the inner adjuster sub–assembly.

BO0MR–01

INSPECTION

INSPECT RECLINING LOCK POSITION AND SLIDING LOCK POSITION SLIPPING OFF

(a) When reclining the seat, inspect that the outer and inner tracks are released at the same time.

HINT:

When the reclining lock positions slip off, disassemble the seat to adjust the position.

(b) When sliding the seat, inspect that the outer and inner tracks are locked at the same time.

HINT:

When sliding lock positions slip off, loosen the bolts to adjust the position.

BO0MS–01

REASSEMBLY

1. INSTALL OUTER ADJUSTER SUB–ASSEMBLY

Install the outer adjuster sub–assembly to the inner adjuster sub–assembly.

2. INSTALL SEAT ADJUSTING HANDLE

Install the seat track adjusting handle.

3. INSTALL RECLINING CONNECTING PIPE

(a) Adjust the reclining lock positions of the seat adjusters.

(b) Slide the seat adjusters to the most front position.

(c) Place the adjusters on a spacer to adjust the seat rails in parallel and install the connecting pipe.

HINT:

When installing the connecting pipe with raising up the adjusters, the lock positions adjusted in 3–(a) step slip off, lock error will occur.

4. INSTALL SEAT CUSHION COVER

(a) Install the seat cushion cover to seat cushion pad.

(b) Install the seat cushion cover with pad to the seat cushion frame.

5. INSTALL SEAT CUSHION ASSEMBLY

Install the seat cushion assembly with 4 bolts to the seat adjuster.

HINT:

Tighten the 4 bolts temporarily, then from the bolts on the rear side tighten completely.

6. w/ Side Airbag Assembly:
INSTALL SIDE AIRBAG ASSEMBLY

Install the side airbag assembly with 2 nuts to the seatback frame.

Torque: 6.0 N·m (61 kgf·cm, 53 in.·lbf)

NOTICE:

- **Make sure that the side airbag assembly is installed to the specified torque.**
- **If the side airbag assembly has been dropped, or there are cracks, dents or other defects in the case or connector, replace the side airbag assembly with a new one.**
- **When installing the side airbag assembly, take care is not pinched between other parts.**

7. INSTALL SEATBACK COVER

(a) Install the seatback cover to the seatback pad.

(b) Install the seatback cover with pad to the seatback frame.

(c) Install the headrest supports.

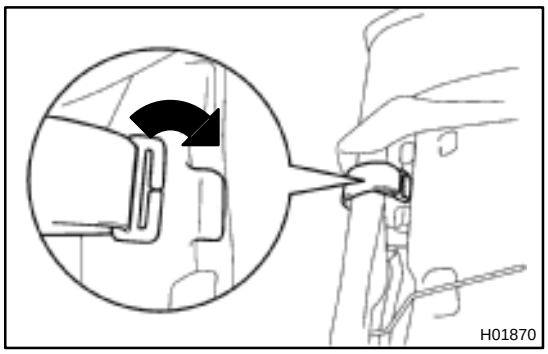

(d) w/ Side Airbag Assembly:
Hang the hook on to the seatback frame.

CAUTION:
Take care to hung the hook securely. Otherwise the seat cover slides, it might cause incorrect deploying.

8. INSTALL SEATBACK ASSEMBLY

(a) Install the seatback assembly with 4 bolts.

HINT:
Tighten the 4 bolts temporarily, then from the bolt on the front right side tighten completely.

(b) Install a new hog rings.

HINT:
Install the hog rings to prevent wrinkles as least as possible.

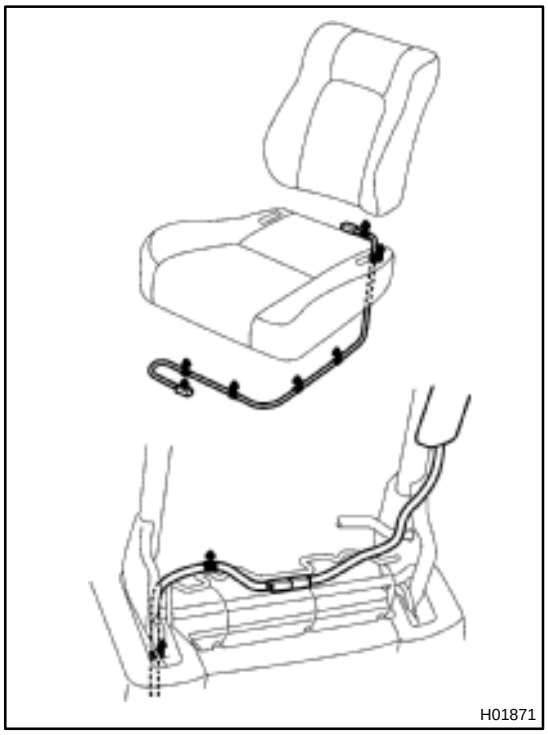

(c) w/ Side Airbag Assembly:
Securely fix the side airbag wire harness to seat cushion by clips.

9. INSTALL THESE PARTS:

(a) Front seat inner belt
(b) Headrest
(c) w/ Lumber Support:
Lumber support lever
(d) Front seatback hinge cover
(e) Front seat cushion lower shield
(f) Vertical Seat Adjuster:
Vertical adjuster knob
(g) Front seat cushion shield
(h) Release handle

BO0MT–01

INSTALLATION

INSTALL FRONT SEAT

(a) Slide the front seat to the most front position.

NOTICE:

Make sure that seat adjuster locks.

(b) Without holding the seat track handle, mount the seat to the vehicle.

HINT:

If holding the seat track handle, the adjusted most front positions slip off.

(c) Tighten the bolts on the rear side temporarily, from the bolt on the inner side tighten completely.

(d) Slide the seat to the most rear position to install the bolts on the front side.

REAR SEAT (TMC Made)

BO0NA–01

COMPONENTS

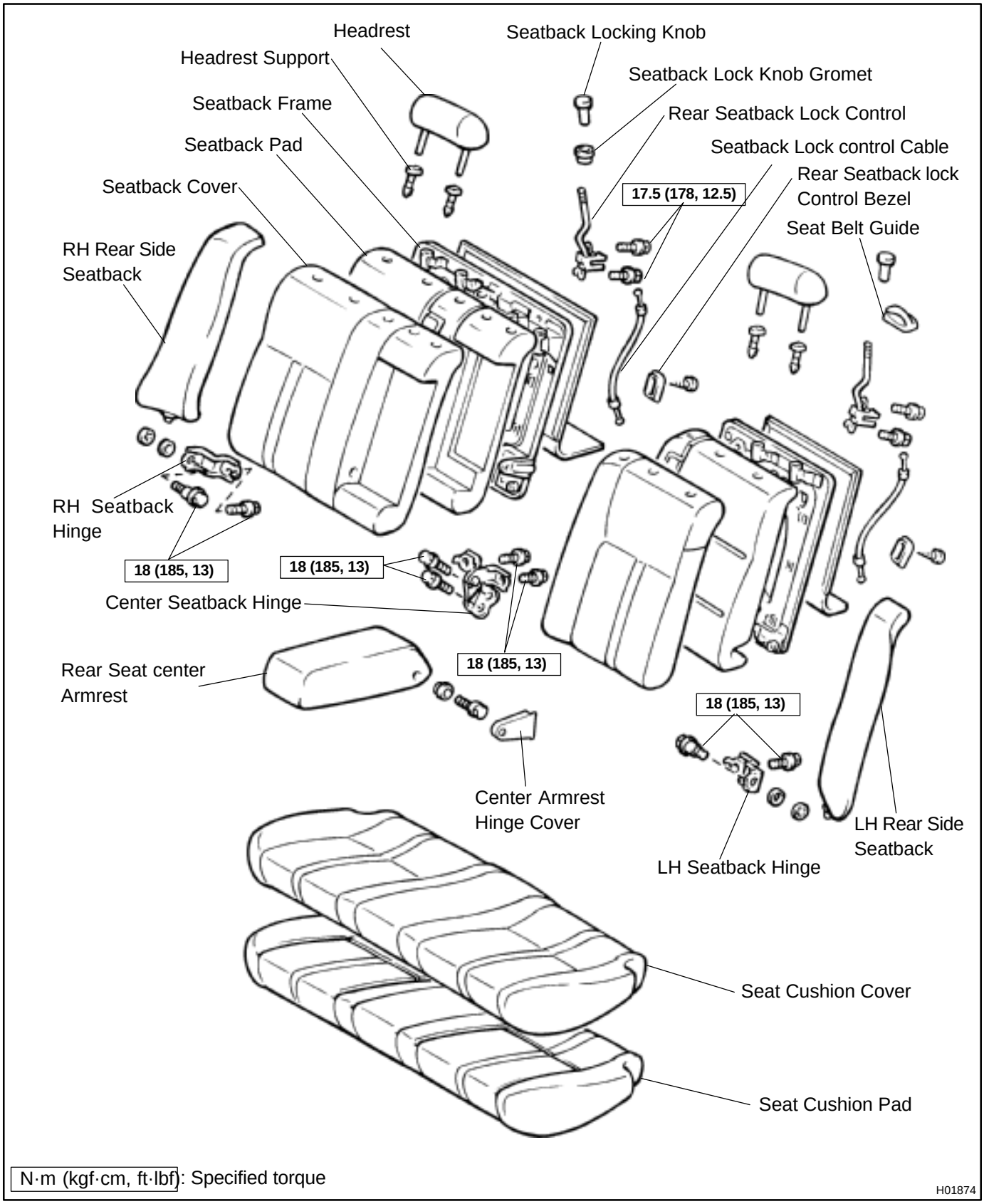

N·m (kgf·cm, ft·lbf): Specified torque

H01874

BO0NB–01

REMOVAL

1. REMOVE LH SEATBACK ASSEMBLY

(a) Release lock to lean the seat back to front.

(b) Remove the clips.

(c) Remove the 2 bolts and LH seatback assembly.

2. REMOVE RH SEAT BACK ASSEMBLY

(a) Release lock to lean the seatback to front.

(b) Remove the clips.

(c) Remove the 2 bolts and RH seatback assembly.

3. REMOVE SEAT CUSHION ASSEMBLY

(a) Remove the seat cushion assembly.

HINT:

Remove the rear seat inner with center belt from seat cushion slit to remove the seat cushion.

(b) Remove the 2 lock hooks.

4. REMOVE LH AND RH REAR SIDE SEATBACK

(a) Remove the bolt and LH rear side seatback.

(b) Remove the bolt and RH rear side seatback.

5. REMOVE SEATBACK HINGE

(a) Remove the bolts and LH seatback hinge and RH seatback hinge.

(b) Remove the 2 bolts and center seatback hinge.

Torque: 18 N·m (185 kgf·cm, 13 ft·lbf)

BO0NC–01

DISASSEMBLY

1. REMOVE SEAT CUSHION COVER

Remove the hog rings and seat cushion cover from the seat cushion pad.

2. REMOVE THESE PARTS:

HINT:

Remove the clips to turn over the seatback cover before performing the following steps.

(a) Headrest
(b) Rear seatback lock control Bezel.
(c) Rear seatback Board
(d) Headrest supports
(e) Seatback locking knob
(f) Seatback lock knob Gromet
(g) Rear seat center armrest

3. REMOVE SEATBACK COVER

(a) Remove the hog rings and seatback frame from the seatback cover with pad.
(b) Remove the hog rings and seatback cover from the seatback pad.

4. REMOVE SEATBACK LOCK

(a) Remove the rear seatback lock control cable.
(b) Remove the 2 bolts and rear seatback lock control.
Torque: 17.5 N·m (178 kgf·cm, 12.5 ft·lbf)

REASSEMBLY

Reassembly is in the reverse order of disassembly (See page BO–115).

BO0NE–01

INSTALLATION

Installation is in the reverse order of removal (See page BO–114).

REAR SEAT (TMMK Made)

BO0N5–01

COMPONENTS

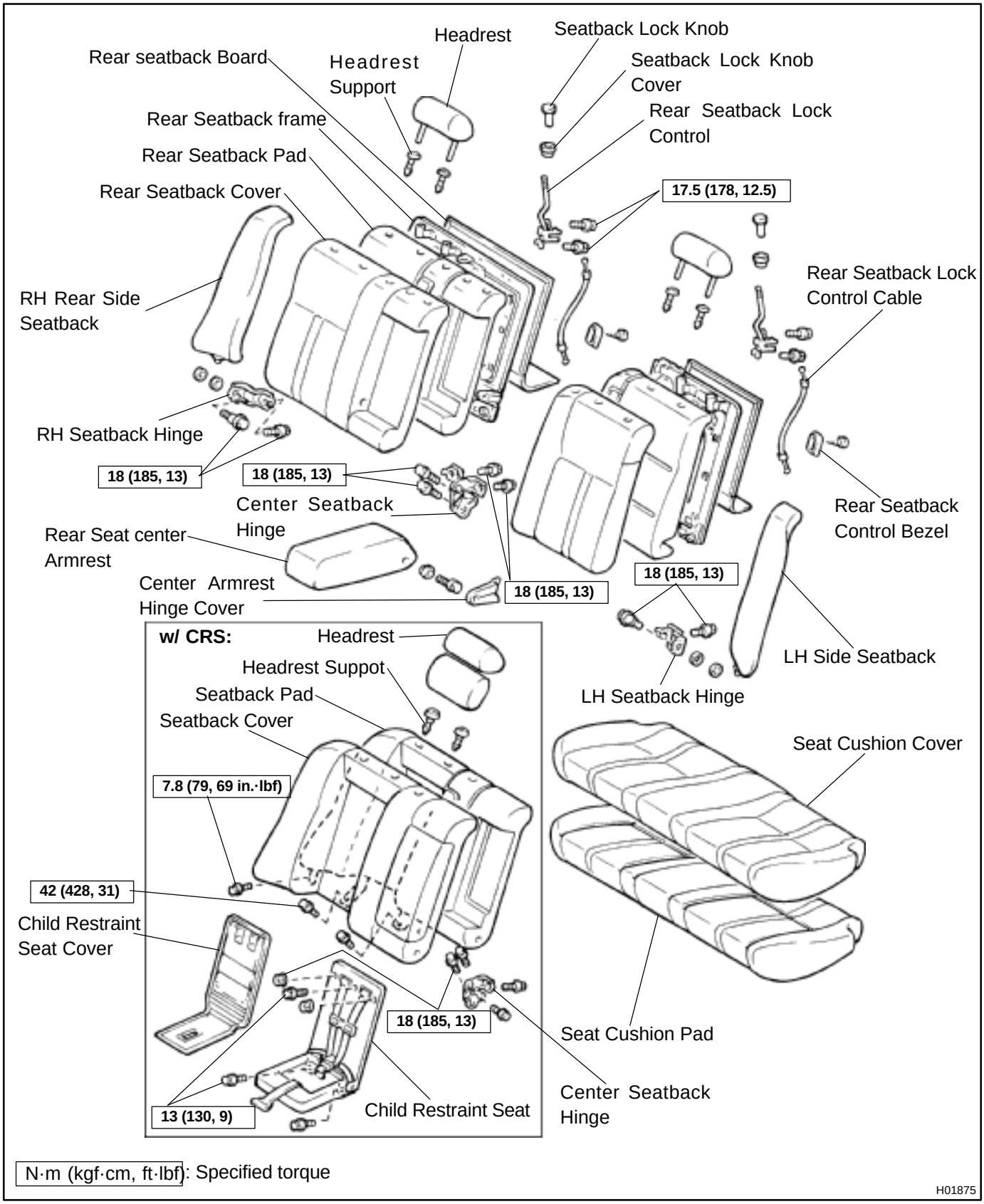

N·m (kgf·cm, ft·lbf): Specified torque

H01875

BO0N6–01

REMOVAL

1. REMOVE SEAT CUSHION ASSEMBLY

(a) Remove the seat cushion assembly.

HINT:

Remove the rear seat inner with center belt from seat cushion slit to remove the seat cushion.

(b) Remove the 2 lock hooks.

2. REMOVE LH SEATBACK ASSEMBLY

(a) Release lock to lean the seatback to front.

(b) Remove the 2 bolts and LH seatback assembly.

3. w/ CRS:

REMOVE CHILD RESTRAINT SEAT

(a) Remove child restraint seat cover.

(b) Remove the 3 bolts and 2 nuts.

Torque: 13 N·m (130 kgf·cm, 9 ft·lbf)

(c) Remove the child restraint seat.

4. w/o CRS:

REMOVE RH SEATBACK ASSEMBLY

(a) Release lock to lean the seatback to front.

(b) Remove the clips.

(c) Remove the bolts and RH seatback assembly.

5. w/ CRS:

REMOVE RH SEATBACK ASSEMBLY

(a) Remove the 3 bolts.

Torque:
RH bolt: 7.8 N·m (80 kgf·cm, 69 in.·lbf)
Center bolt: 42 N·m (428 kgf·cm, 31 ft·lbf)

(b) Remove the RH seatback assembly.

6. REMOVE LH AND RH REAR SIDE SEATBACK

(a) Remove the bolt and LH rear side seatback.

(b) Remove the bolt and RH rear side seatback.

7. REMOVE SEATBACK HINGE

(a) Remove the bolt and LH seatback hinge.

(b) Remove the 2 bolts and center seatback hinge.

Torque: 18 N·m (185 kgf·cm, 13 ft·lbf)

(c) w/o CRS:

Remove the bolt and RH seatback hinge.

Torque: 18 N·m (185 kgf·cm, 13 ft·lbf)

BO0N7–01

DISASSEMBLY

1. REMOVE SEAT CUSHION COVER

Remove the hog rings and seat cushion cover from the seat cushion pad.

2. REMOVE THESE PARTS:

HINT:

Remove the clips to turn over the seatback cover before performing the following steps.

(a) Headrest
(b) Rear seatback control Bezel
(c) Headrest supports
(d) Seatback lock knob
(e) Seatback lock knob cover
(f) Rear seat center armrest

3. REMOVE SEATBACK COVER

(a) Remove the hog rings and seatback frame from the seatback cover with pad.
(b) Remove the hog rings and seatback cover from the satback pad.

4. REMOVE SEATBACK LOCK

(a) Remove the rear seatback lock control cable.
(b) Remove the 2 bolts and rear seatback lock control.
Torque: 17.5 N·m (178 kgf·cm, 12.5 ft·lbf)

BO0N8–01

REASSEMBLY

Reassembly is in the reverse order of disasssembly (See page BO–120).

BO0N9–01

INSTALLATION

Installation is in the reverse order of removal (See page BO–119).

SEAT BELT

COMPONENTS

BO0NF–01

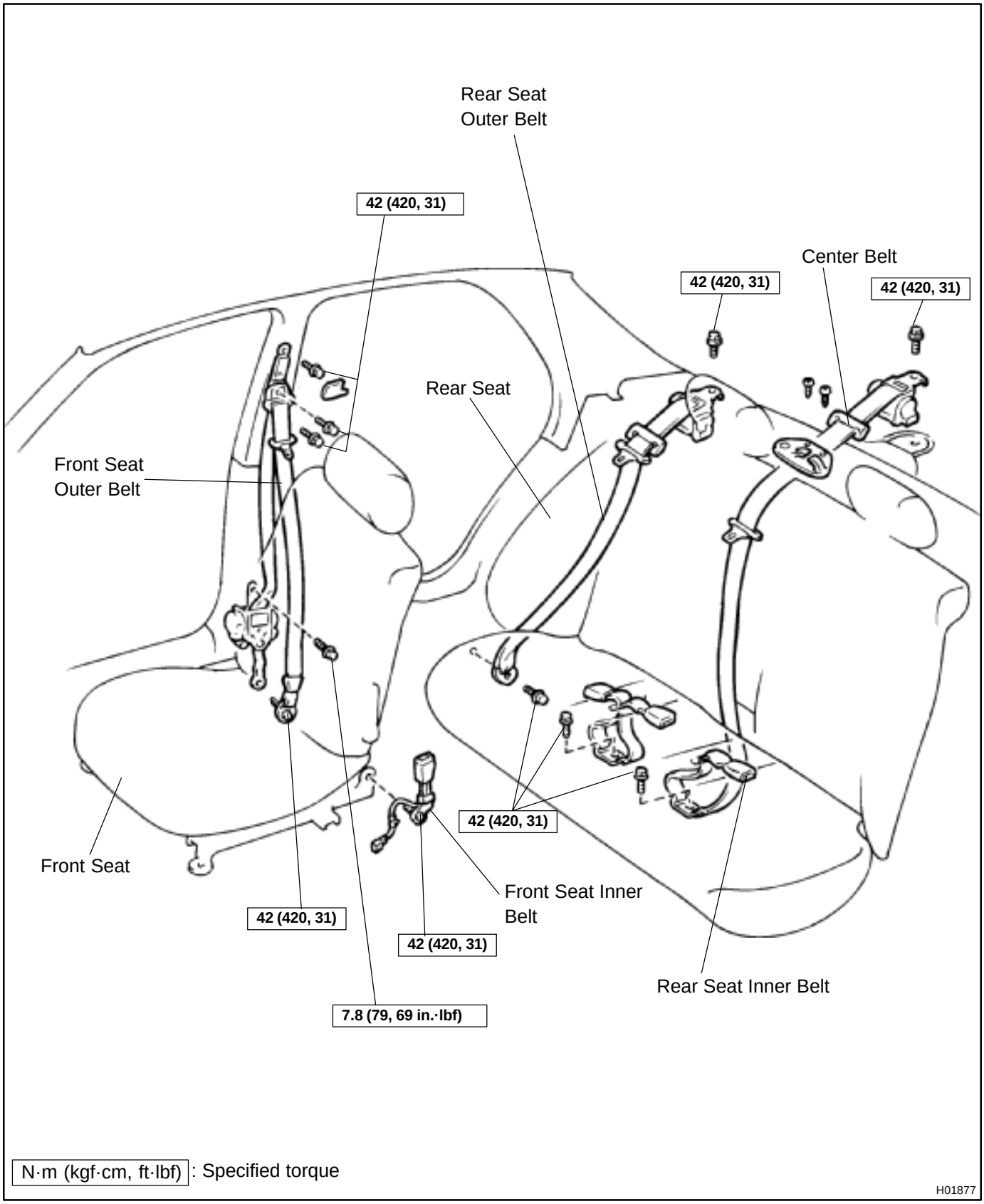

BO0NG–01

INSPECTION

CAUTION:

Replace the seat belt assembly (outer belt, inner belt, bolts, nuts or sill–bar) if it has been used in a severe impact. The entire assembly should be replaced even if damage is not obvious.

1. All Seat Belt:
RUNNING TEST (IN SAFE AREA)

(a) Fasten the front seat belts.

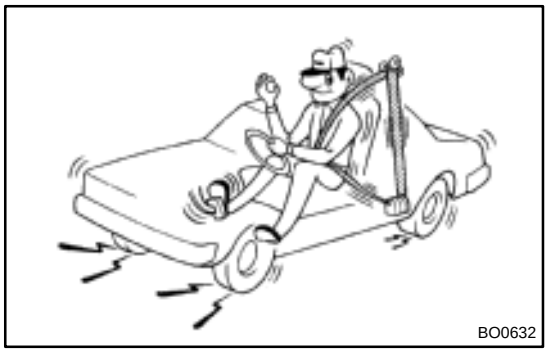
BO0632

(b) Drive the car at 10 mph (16 km/h) and slam on the brakes. Check that the belt locks and cannot be extended at this time.

HINT:

Conduct this test in a safe area. If the belt does not lock, remove the belt mechanism assembly and conduct the following static check. Also, whenever installing a new belt assembly, verify the proper operation before installation.

2. Driver's Seat Belt (ELR):
STATIC TEST

(a) Make sure that the belt locks when pulled out quickly.
(b) Remove the locking retractor assembly.
(c) Tilt the retractor slowly.

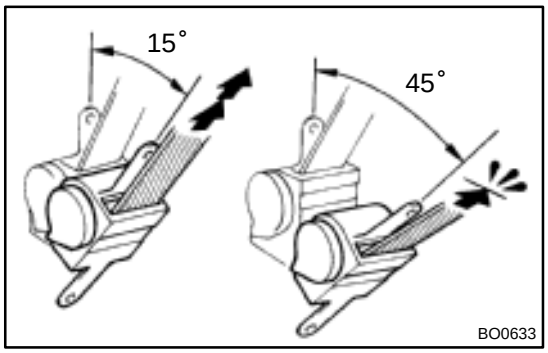

BO0633

(d) Make sure that the belt can be pulled out at a tilt of 15 degrees or less, and cannot be pulled out over 45 degrees of tilt.

If a problem is found, replace the assembly.

3. Front RH Seat Belt and Rear Seat Belt (ALR/ELR):
STATIC TEST

(a) Make sure that the belt locks when pulled out quickly.
(b) Remove the locking retractor assembly.
(c) Pull out the whole belt and measure the length of the whole belt.
Then retract the belt slightly and pull it out again
(d) Make sure that the belt cannot be extended further.

If a problem is found, replace the assembly.

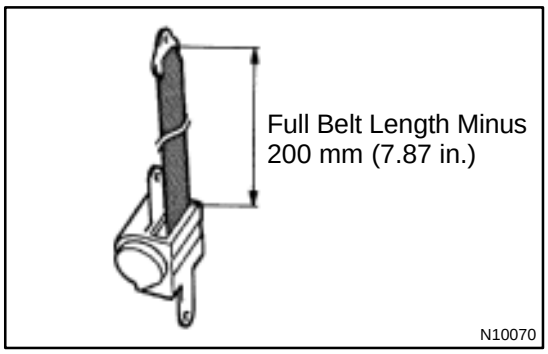

(e) Retract the whole belt, then pull out the belt until 200 mm (7.87 in.) of belt remains retracted.

(f) Tilt the retractor slowly.

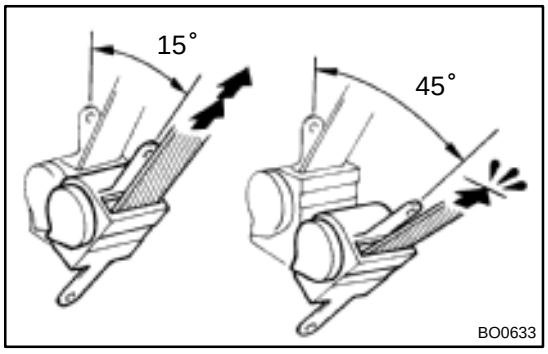

(g) Make sure that the belt can be pulled out at a tilt of 15 degrees or less, and cannot be pulled out at over 45 degrees of tilt.

If a problem is found, replace the assembly.

SEAT BELT PRETENSIONER

BO0NH–01

REMOVAL

NOTICE:

- **If the wiring connector of the supplemental restraint system is disconnected with the ignition switch at ON or ACC, diagnostic trouble codes will be recorded.**
- **Never use SRS parts from another vehicle. When replacing parts, replace them with new parts.**

1. REMOVE THESE PARTS:

(a) Front door scuff plate

(b) Center pillar lower garnish

2. REMOVE FRONT SEAT OUTER BELT

CAUTION:

Never disassemble the front seat outer belt.

NOTICE:

When removing the front outer seat belt, take care not to pull the seat belt pretensioner wire harness.

(a) Remove the bolts and floor anchor.

(b) Using a screwdriver, remove the anchor caps.

HINT:

Tape the screwdriver tip before use.

(c) Remove the bolt and shoulder anchor.

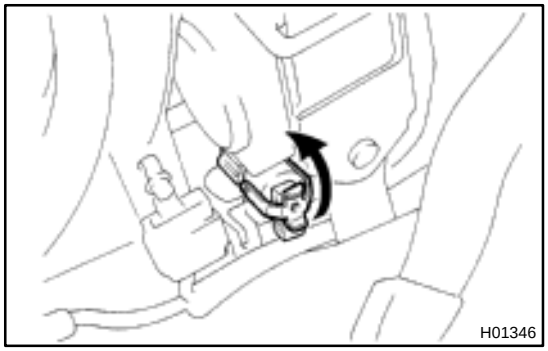

(d) Disconnect the pretensioner connector as shown in the illustration.

(e) Remove the 2 bolts and front seat outer belt.

BO0NI–01

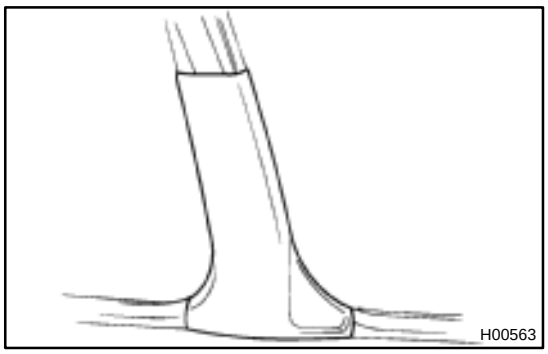

INSPECTION

1. PRETENSIONER IS NOT ACTIVATED

(a) Perform a diagnostic system check.
(See page DI–626)

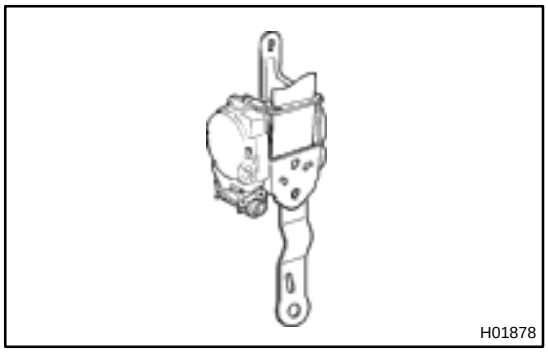

(b) Perform a visual check which includes the following items with the front seat outer belt removed from the vehicle.
- Check for cuts and cracks in, or marked discoloration of the center pillar lower garnish.
- Check for cuts and cracks in wire harnesses, and for chipping in connectors.
- Check for deformation of the center pillar.

CAUTION:
For removal and installation of the front seat outer belt, see page BO–123.
Be sure to follow the correct procedure.

2. PRETENSIONER IS ACTIVATED

(a) Perform a diagnostic system check.
(See page DI–626)

(b) Perform a visual check which includes the following items with the front seat outer belt removed from the vehicle.
- Check for deformation of the center pillar.
- Check for damage on the connector and wire harness.

BO0NJ–01

DISPOSAL

HINT:

When scrapping vehicles equipped with a supplemental restraint system or disposing of a front seat outer belt (with seat belt pretensioner) always first activate the seat belt pretensioner in accordance with the procedure described below. If any abnormality occurs with the seat belt pretensioner operation, contact the SERVICE DEPT. of the DISTRIBUTOR. when disposing of a front seat outer belt (with seat belt pretensioner) deployed in a collision, follow the same procedure given in step 1–(d) in ”DISPOSAL”.

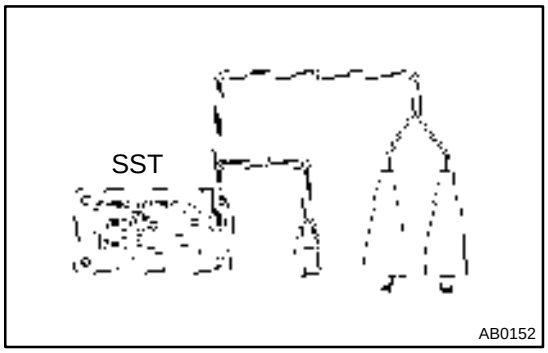

CAUTION:

- **Never dispose of front seat outer belt which has an undeployed pretensioner.**
- **The seat belt pretensioner produces a sizeable exploding sound when it deploys, so perform the operation out–of–door and where it will not create a nuisance to nearby residents.**
- **When deploying the seat belt pretensioner, always use the specified SST. (SRS Airbag Deployment Tool) Perform the operation in a place away from electrical noise.**

  SST 09082–00700, 09082–00740
- **When deploying a front seat outer belt (with seat belt pretensioner), perform the operation from at least 10 m (33 ft) away from the front seat outer belt.**
- **Use gloves and safety glasses when handling a front seat outer belt with operated pretensioner.**
- **Always wash your hands with water after completing the operation.**
- **Do not apply water, etc. to a front seat outer belt with operated pretensioner.**

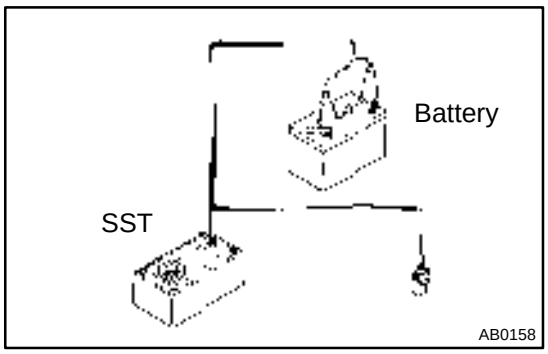

1. SEAT BELT PRETENSIONER DEPLOYMENT WHEN SCRAPPING VEHICLE

HINT:
Have a battery ready as the power source to deploy the airbag.

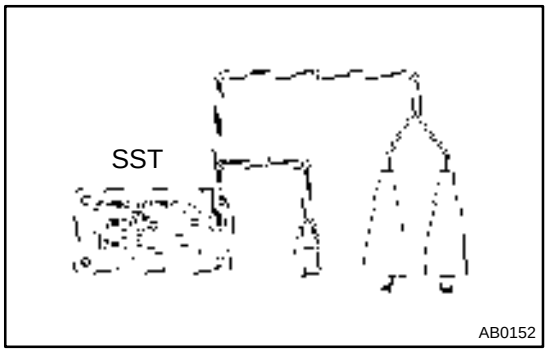

(a) Check functioning of SST

CAUTION:
When deploying the seat belt pretensioner, always use the specified SST: SRS Airbag Deployment Tool.

SST 09082–00700, 09082–00740

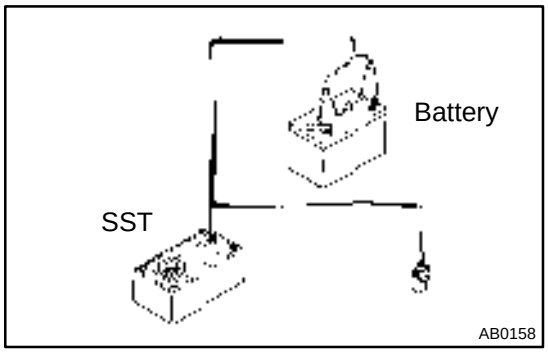

(1) Connect the SST to battery.
Connect the red clip of the SST to the battery positive (+) terminal and the black clip to the battery negative (–) terminal.

HINT:
Do not connect the yellow connector which will be connected with the seat belt pretensioner.

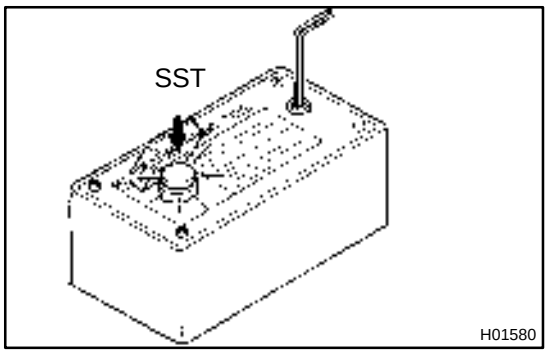

(2) Check functioning of SST
Press the SST activation switch, and check the LED of the SST activation switch lights up.

CAUTION:
If the LED lights up when the activation switch is not being pressed, SST malfunction is probable, so definitely do not use the SST.

(b) Install the SST.
(1) Remove the front door scuff plate.
(2) Remove the center pillar lower garnish.
(3) Disconnect the pretensioner connector as shown in the illustration.
(4) Buckle the front seat belt and check that there is no looseness and slack in the front seat inner belt and front seat outer belt.

SST 09082–00700, 09082–00740

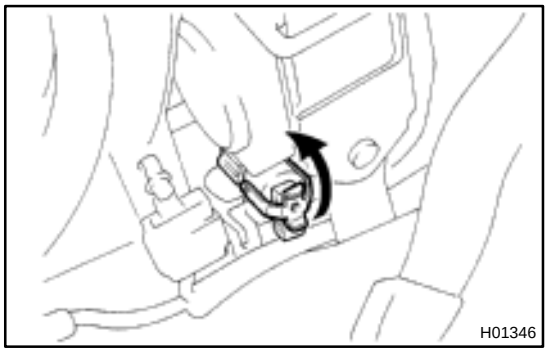

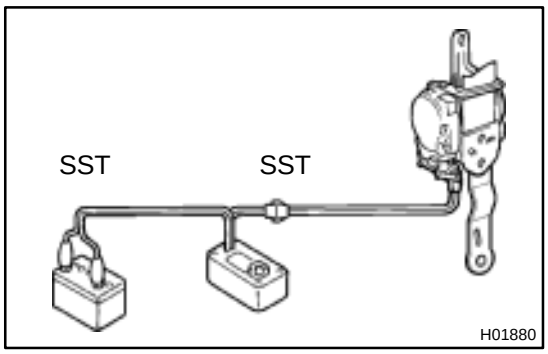

(5) Connect the 2 SST, then connect them to the seat belt pretensioner.

SST 09082–00700, 09082–00740

NOTICE:

To avoid damaging the SST connector and wire harness, do not lock the secondary lock of secondary lock of the twin lock.

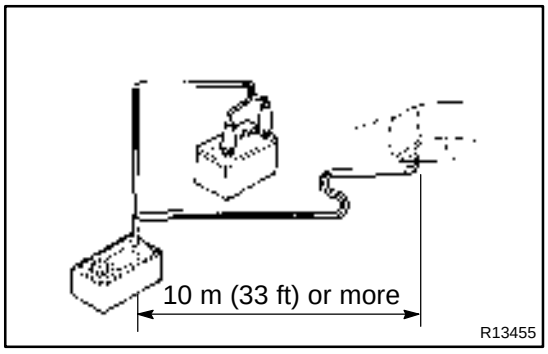

(6) Move the SST to at least 10mm (33 ft) from the front of the vehicle.

(7) Close all the doors and windows of the vehicle.

NOTICE:

Take care not to damage the SST wire harness.

(8) Connect the SST red clip the battery positive (–) terminal and the black clip to the negative (+) terminal.

(c) Deploy the airbag.

(1) Confirm that no one is inside the vehicle or within 10 m (33 ft) area around of the vehicle.

(2) Press the SST activation switch and activate the seat belt pretensioner.

HINT:

The seat belt pretensioner operates simultaneously as the LED of the SST activation switch light up.

(d) Disposal of front seat outer belt (with seat belt pretensioner).

CAUTION:

- **The front seat outer belt is very hot when the seat belt pretensioner is deployed, so leave it alone for at least 30 minutes after deployment.**
- **Use gloves and safety glasses when handling a front seat outer belt with deployed seat belt pretensioner.**
- **Always wash your hands with water after completing the operation.**
- **Do not apply water, etc. to a front seat outer belt with deployed seat belt pretensioner.**

  When scrapping a vehicle, activate the seat belt pretensioner and scrap the vehicle with operated front seat outer belt still installed.

2. DEPLOYMENT WHEN DISPOSING OF FRONT SEAT OUTER BELT ONLY

NOTICE:

- **When disposing of the front seat outer belt (with seat belt pretensioner) only, never use the customer's vehicle to deploy the seat belt pretensioner.**
- **Be sure to following the procedure given below when deploying the seat belt pretensioner.**

HINT:

Have a battery ready as the power source when deploying the seat belt pretensioner.

(a) Remove the front seat outer belt
(See page BO–123)

HINT:

Cut the belt near the seat belt retractor.

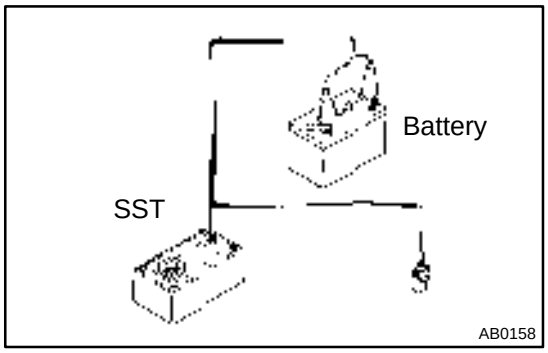

(b) Check functioning of SST.
(See step 1–(a))
SST 09082–00700, 09082–00740

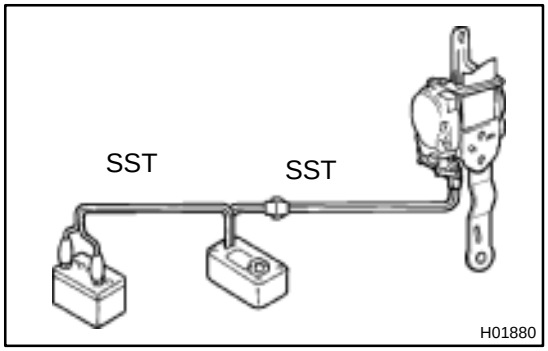

(c) Install the SST.
(1) Connect the 2 SST, then connect them to the seat belt pretensioner.
SST 09082–00700, 09082–00740

NOTICE:

To avoid damaging the SST connector and wire harness, do not lock the secondary lock of the twin lock.

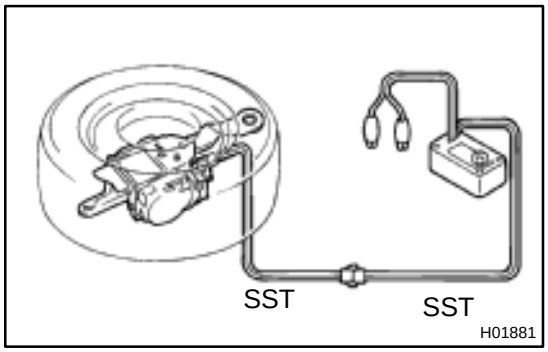

(2) Locate the front seat outer belt on the ground and cover it by the disc wheel with tire.

NOTICE:

Place the front seat outer belt shown in the illustration.

(3) Move the SST to as least 10 m (33 ft) from the disc wheel.

NOTICE:

Take care not to damage the SST wire harness.

(d) Deploy the seat belt pretensioner.
(1) Connect the SST red clip to the battery positive (+) terminal and black clip to the battery negative (–) terminal.
(2) Check that no one is within 10 m (33 ft) area around of the disc wheel.
(3) Press the SST activation switch and activate the seat belt pretensioner.

HINT:
The seat belt pretensioner operates simultaneously as the LED of the SST activation switch lights up.

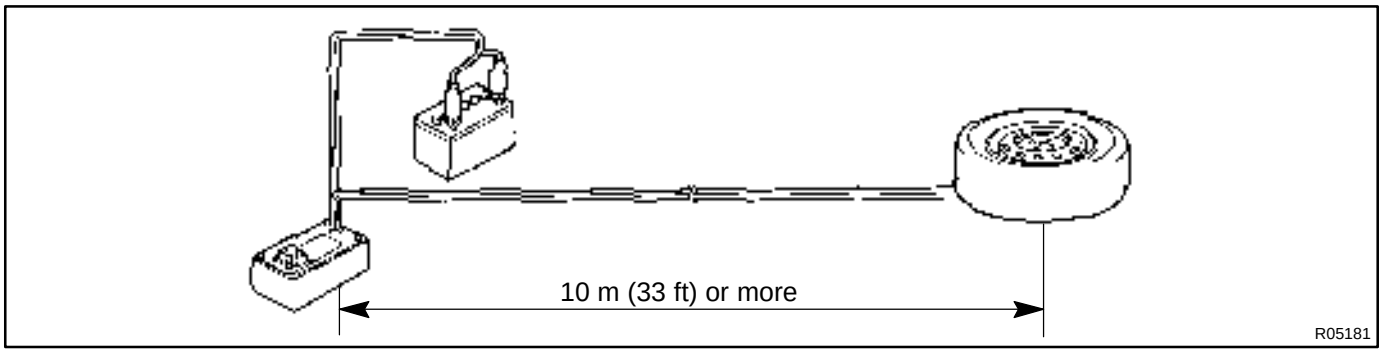

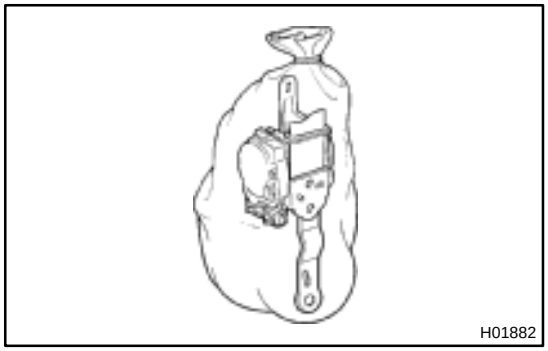

(e) Disposal of front seat outer belt (with seat belt pretensioner).

CAUTION:
- **The front seat outer belt is very hot when the seat belt pretensioner is deployed, so leave it alone for at least 30 minutes after deployment.**
- **Use gloves and safety glasses when handling a front seat outer belt with deployed seat belt pretensioner.**
- **Always wash your hands with water after completing the operation.**
- **Do not apply water, etc. to a front seat outer belt with deployed seat belt pretensioner.**

(1) Remove the disc wheel and SST.
(2) Place the front seat outer belt in a vinyl bag, tie the end tightly and dispose of in it the same way as other general parts.

BO0NK–01

REPLACEMENT

REPLACE REQUIREMENTS

In the following cases, replace the seat belt pretensioner.

- If the seat belt pretensioner has been activated.
- If the seat belt pretensioner has been found to be faulty in troubleshooting.
- If the front seat outer belt has been found to be faulty during the check in items 1–(b) or 2–(b).
- If the front seat outer belt has been dropped.

CAUTION:

For removal and installation of the seat belt pretensioner, see page BO–126 and BO–134.
Be sure to follow the correct procedure.

BO0NL–01

INSTALLATION

NOTICE:

Never use seat belt pretensioner from another vehicle. When replace parts, replace them with new parts.

1. INSTALL FRONT SEAT OUTER BELT

(a) Install the front seat belt parts by following the reverse order of removal and torque the following bolts.

(1) Front seat outer belt retractor

Torque: 7.8 N·m (80 kgf·cm, 69 in.·lbf)

(2) Seat belt shoulder anchor

Torque: 42 N·m (430 kgf·cm, 31 ft·lbf)

(3) Seat belt floor anchor

Torque: 42 N·m (430 kgf·cm, 31 ft·lbf)

NOTICE:

- **Make sure that the front seat outer belt is installed with the specified torque.**
- **If the front seat outer belt has been dropped, or there are cracks, dents or other defects in the case or connector, replace the front seat outer belt with a new one.**
- **When installing the front seat outer belt, take care that the wiring does not interfere with other parts and is not pinched between other parts.**

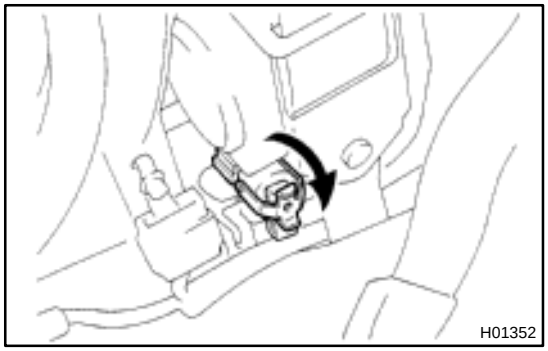

(b) Connect the pretensioner connector as shown in the illustration.

(c) w/ Seat Belt Warning:
Connect the retractor switch connector.

2. INSTALL THESE PARTS:

(a) Center pillar lower garnish

(b) Front door scuff plate

BODY ELECTRICAL SYSTEM

BE09Y–01

PRECAUTION

Take care to observe the following precautions when performing inspections or removal and replacement of body electrical related parts.

1. HEADLIGHT SYSTEM

- Halogen bulbs have pressurized gas inside and require special handling. They can burst if scratched or dropped. Hold a bulb only by its plastic or metal case. Don't touch the glass part of a bulb with bare hands.

2. SRS (SUPPLEMENTAL RESTRAINT SYSTEM)

- The CAMRY is equipped with an SRS (Supplemental Restraint System) such as the driver airbag and front passenger airbag. Failure to carry out service operation in the correct sequence could cause the SRS to unexpectedly deploy during servicing, possibly leading to a serious accident. Before servicing (including removal or installation of parts, inspection or replacement), be sure to read the precautionary notices in the RS section.

3. AUDIO SYSTEM

- If the negative (–) terminal cable is disconnected from the battery, the preset AM, FM 1 and FM 2 stations stored in memory are erased, so make sure to note the stations and reset them after the negative (–) terminal cable is reconnected to the battery.
- If the negative (–) terminal cable is disconnected from the battery, the "ANTI–THEFT SYSTEM" will operate when the cable is reconnected, but the radio, tape player and CD player will not operate. Be sure to input the correct ID number so that the radio, tape player and CD player can be operated again.

4. MOBILE COMMUNICATION SYSTEM

- If the vehicle is equipped with a mobile communication system, refer to precautions in the IN section.

BE09Z–03

PROBLEM SYMPTOMS TABLE

POWER OUTLET

Symptom	Suspect Area	See page
Electric power source cannot be taken out of the power outlet	11. Battery 12. POWER OUTLET Fuse (I/P J/B No.1) 13. Wire Harness	– – –

HEADLIGHT AND TAILLIGHT SYSTEM (USA)

Symptom	Suspect Area	See page
Headlight does not light. (Taillight is normal)	1. HEAD–(LH, RH) Fuse (E/G Room J/B No.2) 2. Headlight Bulb 3. Wire Harness	– – –
Headlight does not light. (Taillight does not light up)	1. HEAD–(LH, RH) Fuse (E/G Room J/B No.2) 2. Headlight Control Relay (E/G Room J/B No.2) 3. Headlight Bulb 4. Wire Harness	– BE–24 – –
Only one side light does not light.	1. HEAD–(LH, RH) Fuse (E/G Room J/B No.2) 2. Headlight Bulb 3. Wire Harness	– – –
”Lo–Beam” does not light.	1. Headlight Bulb 2. Light Control Switch 3. Wire Harness	– BE–24 –
”Hi–Beam” does not light.	1. Headlight Dimmer Switch 2. Light Control Switch 3. Wire Harness	BE–24 BE–24 –
”Flash” does not light.	1. Headlight Dimmer Switch 2. Wire Harness	BE–24 –
”Auto Turn–off System” does not operate.	1. GAUGE Fuse (I/P J/B No.1) 2. DOME Fuse (E/G Room J/B No.2) 3. Integration Relay (I/P J/B No.2) 4. Door Courtesy Switch (Driver’s) 5. Ignition Switch 6. Wire Harness	– – BE–14 BE–24 BE–14 –
Taillight does not light. (Headlight does not light)	1. Light Control Switch 2. Integration Relay (I/P J/B No.1) 3. Wire Harness	BE–24 BE–14 –
Taillight does not light. (Headlight is normal)	1. TAIL Fuse (I/P J/B No.1) 2. Taillight Control Relay (I/P J/B No.1) 3. Light Control Switch 4. Integration Relay (I/P J/B No.1) 5. Wire Harness	– BE–24 BE–24 BE–14 –
Only one side light does not light.	1. Bulb 2. Wire Harness	– –
Rear Combination light does not light.	1. Bulb 2. Light Failure Sensor 3. Wire Harness	– BE–37 –
”Auto Turn–off System” does not operate.	1. GAUGE Fuse (I/P J/B No.1) 2. Integration Relay (I/P J/B No.1) 3. Door Courtesy Switch (Driver’s) 4. Wire Harness	– BE–14 BE–32 –

HEADLIGHT AND TAILLIGHT SYSTEM (CANADA)

Symptom	Suspect Area	See page
Headlight does not light. (Taillight is normal)	1. Wire Harness	–
Headlight does not light. (Taillight does not light up)	1. Wire Harness	–
Only one side light does not light.	1. Headlight Bulb 2. HEAD LO (LH, RH) Fuse (E/G Room R/B No.2) 3. Wire Harness	– – –
”Lo–Beam” does not light.	1. Headlight Bulb 2. HEAD LO (LH, RH) Fuse (E/G Room R/B No.2) 3. Headlight Control Relay (E/G Room J/B No.2) 4. Integration Relay (I/P J/B No.1) 5. Light Control Switch 6. Wire Harness	– – BE–24 BE–14 BE–24 –
”Hi–Beam” does not light.	1. Headlight Bulb 2. ECU–B Fuse (E/G Room J/B No.2) 3. HEAD HI (LH, RH) Fuse (E/G Room J/B No.2) 4. DRL Fuse (E/G Room R/B No.2) 5. Daytime Running Light Relay No.2 (E/G Room R/B No.2) 6. Daytime Running Light Relay No.3 (E/G Room R/B No.2) 7. Daytime Running Light Relay No.4 (E/G Room R/B No.2) 8. Daytime Running Light Relay (Main) 9. Headlight Dimmer Switch 10.Wire Harness	– – – – – BE–24 – BE–24 – BE–24 BE–24 BE–24 –
”Flash” does not light.	1. Headlight Bulb 2. ECU–B Fuse (E/G Room J/B No.2) 3. HEAD HI (LH, RH) Fuse (E/G Room J/B No.2) 4. DRL Fuse (E/G Room R/B No.2) 5. Daytime Running Light Relay No.2 (E/G Room R/B No.2) 6. Daytime Running Light Relay No.3 (E/G Room R/B No.2) 7. Daytime Running Light Relay No.4 (E/G Room R/B No.2) 8. Daytime Running Light Relay (Main) 9. Headlight Dimmer Switch 10.Wire Harness	– – – – – BE–24 – BE–24 – BE–24 BE–24 BE–24 –
”Auto Turn–off System” does not operate.	1. GAUGE Fuse (I/P J/B No.1) 2. DOME Fuse (E/G Room J/B No.2) 3. Integration Relay (I/P J/B No.2) 4. Door Courtesy Switch (Driver’s) 5. Ignition Switch 6. Wire Harness	– – BE–14 BE–24 BE–14 –
Headlight does not light with engine running and light control SW OFF.	1. Headlight Bulb 2. ECU–B Fuse (E/G Room J/B No.2) 3. GAUGE Fuse (I/P J/B No.1) 4. HEAD HI (LH, RH) Fuse (E/G Room J/B No.2) 5. Daytime Running Light Relay (Main) 6. Wire Harness 7. Other Parts*	– – – – BE–24 – –

Taillight does not light. (Headlight does not light)	1. Integration Relay (I/P J/B No.1) 2. Light Control Switch 3. Wire Harness	BE–14 BE–24 –
Taillight does not light. (Headlight is normal)	1. TAIL Fuse (I/P J/B No.1) 2. Taillight Control Relay (I/P J/B No.1) 3. Integration Relay (I/P J/B No.1) 4. Light Control Switch 5. Wire Harness	– BE–24 BE–14 BE–24 –
Only one side light does not light.	1. Bulb 2. Wire Harness	– –
Rear Combination light does not light.	1. Bulb 2. Light Failure Sensor 3. Wire Harness	– BE–37 –
”Auto Turn–off System” does not operate.	1. GAUGE Fuse (I/P J/B No.1) 2. Integration Relay (I/P J/B No.1) 3. Door Courtesy Switch (Driver’s) 4. Wire Harness	– BE–14 BE–24 –

*Terminal L of generator and parking brake switch

TURN SIGNAL AND HAZARD WARNING SYSTEM

Symptom	Suspect Area	See page
”Hazard” and ”Turn” do not light up.	1. Hazard Warning Switch 2. Turn Signal Flasher 3. Wire Harness	BE–30 BE–30 –
The flashing frequency is abnormal.	1. Bulb 2. Turn Signal Switch 3. Wire Harness	– BE–30 –
Hazard warning light does not light up. (Turn is normal.)	1. HORN Fuse (E/G Room J/B No.2) 2. Wire Harness	– –
Hazard warning light does not light up in one direction.	1. Hazard Warning Switch 2. Wire Harness	BE–30 –
*1Turn signal does not light up.	1. Ignition Switch 2. TURN Fuse (I/P J/B No.1) 3. Turn Signal Switch 4. Wire Harness	BE–14 – BE–30 –
*2Turn signal does not light up.	1. TURN Fuse (I/P J/B No.1) 2. Turn Signal Switch 3. Wire Harness	– BE–30 –
Turn signal does not light up in one direction.	1. Turn Signal Switch 2. Wire Harness	BE–30 –
Only one bulb does not light up.	1. Bulb 2. Wire Harness	– –

*1: Combination meter, wiper and washer do not operate.
*2: Combination meter, wiper and washer are normal.

INTERIOR LIGHT SYSTEM

Symptom	Suspect Area	See page
”Illuminated Entry System” does not operate.	1. Door Courtesy Switch 2. Integration Relay (I/P J/B No.1) 3. Wire Harness	BE–32 BE–14 –
Only one interior light does not light up.	1. Bulb 2. Wire Harness	– –
Interior light does not light up (All).	1. DOME Fuse (E/G Room J/B No.2) 2. Wire Harness	– –

Dome light does not light up.	1. Bulb 2. Dome Light 3. Wire Harness	– BE–32 –
Map Light does not light up.	1. Bulb 2. Map Light 3. Wire Harness	– BE–32 –
Luggage compartment light does not light up.	1. Bulb 2. Luggage compartment door courtesy switch 3. Wire Harness	– BE–32 –

BACK–UP LIGHT SYSTEM

Symptom	Suspect Area	See page
Back–Up Light does not light up.	1. GAUGE Fuse (I/P J/B No.1) 2. Ignition Switch 3. Wire Harness 4. Bulb	– BE–14 – –
Back–Up Light remains always ON.	1. Back–Up Light Switch (M/T) 2. Park/Neutral Position Switch (A/T) (A140E) (A541E) 3. Wire Harness	BE–35 DI–424 DI–479 –
Only one light does not light up.	1. Bulb 2. Wire Harness	– –

STOP LIGHT SYSTEM

Symptom	Suspect Area	See page
Stop light does not light up.	1. STOP Fuse (I/P J/B No.1) 2. Stop Light Switch 3. Wire Harness	– BE–37 –
Only one light always lights up.	1. Wire Harness	–
Only one light does not light.	1. Bulb 2. Wire Harness	– –

WIPER AND WASHER SYSTEM

*1: Inspect wiper arm and blade set position

Symptom	Suspect Area	See page
Wiper and washers do not operate.	1. WIPER Fuse (I/P J/B No.1) 2. Wiper Switch 3. Wiper Motor 4. Wire Harness	– BE–40 BE–40 –
Wipers do not operate in LO or HI.	1. Wiper Switch 2. Wiper Motor 3. Wire Harness	BE–40 BE–40 –
Wipers do not operate in INT.	1. Wiper Switch 2. Wiper Motor 3. Wire Harness	BE–40 BE–40 –
Washer motor does not operate.	1. Washer Switch 2. Washer Motor 3. Wire Harness	BE–40 BE–40 –
Wipers do not operate when washer switch in ON.	1. Washer Motor 2. Wire Harness	BE–40 –

Washer fluid does not operate.	1. Washer Hose and Nozzle	–
● In wiper switch HI position, the wiper blade is in contact with the body. ● When the wiper switch is OFF, the wiper blade does not retract or the retract position is wrong.	1. *1Wiper Switch 2. Wire Harness	BE–40 –

COMBINATION METER
METER, GAUGES AND ILLUMINATION:

Symptom	Suspect Area	See page
Tachometer, Fuel Gauge and Engine Coolant Temperature Gauge do not operate.	1. GAUGE Fuse (I/P J/B No.1) 2. Meter Circuit Plate 3. Wire Harness	– BE–46 –
Speedometer does not operate.	1. No.1 Vehicle Speed Sensor 2. Meter Circuit Plate 3. Wire Harness	BE–47 BE–46 –
Tachometer does not operate.	1. Igniter (5S–FE) (1MZ–FE) 2. Meter Circuit Plate 3. Wire Harness	IG–1 IG–1 BE–46 –
Fuel Gauge does not operate or abnormal operation.	1. Fuel Receiver Gauge 2. Fuel Sender Gauge 3. Meter Circuit Plate 4. Wire Harness	BE–47 BE–47 BE–46 –
Engine Coolant Temperature Gauge does not operate or abnormal operation	1. Engine Coolant Temperature Receiver Gauge 2. Engine Coolant Temperature Sender Gauge 3. Meter Circuit Plate 4. Wire Harness	BE–47 BE–47 BE–46 –
All illumination lights do not light up.	1. TAIL Fuse (I/P J/B No.1) 2. Light Control Rheostat 3. Wire Harness	– BE–47 –
Brightness does not change even when rheostat turned.	1. Bulb 2. Wire Harness	– –
Only one illumination light does not light up.	1. Bulb 2. Wire Harness	– –

COMBINATION METER
WARNING LIGHTS:

Symptom	Suspect Area	See page
Warning lights do not light up. (Except Discharge, Open Door and SRS)	1. GAUGE Fuse (I/P J/B No.1) 2. Meter Circuit Plate 3. Wire Harness	– BE–46 –
Low Oil Pressure warning light does not light up.	1. Bulb 2. Low Oil Pressure Warning Switch 3. Meter Circuit Plate 4. Wire Harness	– BE–47 BE–46 –
Fuel Level warning light does not light up.	1. Bulb 2. Fuel Level Warning Switch 3. Meter Circuit Plate 4. Wire Harness	– BE–47 BE–46 –
ABS warning light does not light up.	1. Bulb 2. ABS ECU 3. Wire Harness	– IN–31 –

Seat Belt warning light does not light up.	1. Bulb 2. Seat Belt Buckle Switch 3. Integration Relay (I/P J/B No.1) 4. Wire Harness	– BE–47 BE–47 –
Discharge warning light does not light up.	1. IGN Fuse (I/P J/B No.1) 2. Bulb 3. Wire Harness 4. Generator (5S–FE) (1MZ–FE)	– – – CH–1 CH–1
Light Failure warning light does not light up.	1. Bulb 2. Light Failure Sensor 3. Bulb Check Relay 4. Wire Harness 5. Taillight system	– BE–37 BE–47 – BE–24
Brake warning light does not light up.	1. Bulb 2. Parking Brake Switch 3. Brake Fluid Level Warning Switch 4. Bulb Check Relay 5. Meter Circuit Plate 6. Wire Harness	– BE–47 BE–47 BE–47 BE–46 –
SRS Warning light does not light up.	1. ECU–B Fuse (E/G Room J/B No.2) 2. Bulb 3. Airbag Sensor Assembly 4. Meter Circuit Plate 5. Wire Harness	– – DI–626 BE–46 –
Open Door warning light does not light up.	1. DOME Fuse (E/G Room J/B No.2) 2. Bulb 3. Door Courtesy Switch 4. Meter Circuit Plate 5. Wire Harness	– – BE–32 BE–46 –
Washer Level warning light does not light up.	1. Bulb 2. Washer Fluid Level Warning Switch 3. Meter Circuit Plate 4. Wire Harness	– BE–47 BE–46 –

COMBINATION METER INDICATOR LIGHTS:

Symptom	Suspect Area	See page
O/D OFF indicator light does not light up.	1. Bulb 2. O/D OFF Switch (A140E) (A541E) 3. Meter Circuit Plate 4. Wire Harness	– DI–431 DI–487 BE–46 –
Cruise Control indicator light does not light up.	1. Bulb 2. Cruise Control ECU 3. Meter Circuit Plate 4. Wire Harness	– IN–31 BE–46 –
High beam indicator light does not light up.	1. Bulb 2. Meter Circuit Plate 3. Wire Harness 4. Headlight System	– BE–46 – BE–22
Turn indicator light does not light up.	1. Bulb 2. Meter Circuit Plate 3. Wire Harness 4. Turn Signal and Hazard Warning System	– BE–46 – BE–29

Shift indicator lights do not light up.	1. Bulb 2. Meter Circuit Plate 3. Park/Neutral Position Switch (A140E) (A541E) 4. Wire Harness	– BE–46 DI–424 DI–479 –
Only one shift indicator does not light up.	1. Bulb 2. Meter Circuit Plate	– BE–46
Malfunction indicator light does not light up.	1. Bulb 2. ECM 3. Meter Circuit Plate 4. Wire Harness	– – BE–46 –
SLIP indicator light does not light up.	1. Bulb 2. Traction ECU 3. Meter Circuit Plate 4. Wire Harness	– – BE–46 –
TRAC OFF indicator light does not light up.	1. Bulb 2. Traction ECU 3. Meter Circuit Plate 4. Wire Harness	– – BE–46 –
Security indicator light does not light up.	1. Bulb 2. Security ECU 3. Meter Circuit Plate 4. Wire Harness	– – BE–46 –
Indicator lights do not light up. (Except Turn, Hi–beam and security)	1. GAUGE Fuse (I/P J/B No.1) 2. Wire Harness	– –

DEFOGGER SYSTEM

Symptom	Suspect Area	See page
All defogger systems do not operate.	1. DEFOG M–Fuse (I/P J/B No.1) 2. HTR Fuse (I/P J/B No.1) 3. Defogger Relay (I/P J/B No.1) 4. Defogger Switch 5. Wire Harness	– – BE–56 BE–56 –
Rear window defogger does not operate.	1. Defogger Wire 2. Choke Coil 3. Wire Harness	BE–56 – –
Mirror defogger does not operate.	1. MIR/HTR Fuse (I/P J/B No.1) 2. Mirror Defogger 3. Wire Harness	– BE–56 –

POWER WINDOW CONTROL SYSTEM

Symptom	Suspect Area	See page
Power window does not operate (ALL). (Power Door Lock does not operate)	1. POWER M–Fuse (I/P J/B No.1) 2. Power Main Relay (I/P J/B No.1) 3. Wire Harness	– BE–60 –
Power window does not operate (ALL). (Power Door Lock is normal)	1. Ignition Switch 2. Power Window Master Switch 3. Wire Harness	BE–14 BE–60 –
”One Touch Power Window System” does not operate.	1. Power Window Master Switch	BE–60
Only one window glass does not move.	1. Power Window Master Switch 2. Power Window Switch 3. Power Window Motor 4. Wire Harness	BE–60 BE–60 BE–60 –
”Window Lock System” does not operate.	1. Power Window Master Switch	BE–60

”Window Lock Illumination” does not light up.	1. Power Window Master Switch	BE–60
Key–off power window does not operate.	1. GAUGE Fuse (I/P J/B No.1) 2. Integration Relay (I/P J/B No.1) 3. Ignition Switch 4. Door Courtesy Switch 5. Wire Harness	– BE–60 BE–14 BE–32 –

POWER DOOR LOCK CONTROL SYSTEM

Symptom	Suspect Area	See page
”Door lock system” does not operate at all.	1. POWER M–Fuse (I/P J/B No.1) 2. CIG Fuse (I/P J/B No.1) 3. DOOR Fuse (I/P J/B No.1) 4. Integration Relay (I/P J/B No.1) 5. Wire Harness	– – – BE–70 –
Door lock system does not operate by manual switch.	1. Power Window Master Switch 2. Door Lock Manual Switch 3. Integration Relay (I/P J/B No.1) 4. Wire Harness	BE–60 BE–70 BE–70 –
Door lock system does not operate by door key.	1. Door Key Lock and Unlock Switch 2. Integration Relay (I/P J/B No.1) 3. Wire Harness 4. Door Lock Link Disconnected	BE–70 BE–70 – –
Fault in 2–Operation unlock function of Driver’s side door key lock and unlock switch.	1. Door Key Lock and Unlock Switch 2. Integration Relay (I/P J/B No.1) 3. Wire Harness	BE–70 BE–70 –
Fault in key confine prevention operate.	1. Integration Relay (I/P J/B No.1) 2. Key Unlock Warning Switch 3. Door Courtesy Switch 4. Wire Harness	BE–70 BE–14 BE–32 –
Only one door lock does not operate.	1. Door Lock Motor 2. Wire Harness	BE–70 –

SLIDING ROOF SYSTEM

Symptom	Suspect Area	See page
Sliding roof system does not operate. (Door Lock does not operate)	1. POWER M–Fuse (I/P J/B No.1) 2. Power Main Relay (I/P J/B No.1) 3. Wire Harness	– BE–60 –
Sliding roof system does not operate. (Door Lock is normal)	1. Ignition Switch 2. Sliding Roof Control Relay and Switch 3. Sliding Roof Motor and Limit Switch 4. Wire Harness	BE–14 BE–74 BE–74 –
Sliding roof system operates abnormally.	1. Sliding Roof Control Relay and Switch 2. Sliding Roof Motor and Limit Switch 3. Wire Harness	BE–74 BE–74 –
Sliding roof system stops operation half way. (Stones of foreign material trapped in motor assembly)	1. Sliding Roof Control Relay and Switch 2. Sliding Roof Motor and Limit Switch 3. Wire Harness	BE–74 BE–74 –
”Key–off Sliding Roof” operation does not operate.	1. DOME Fuse (E/G Room J/B No.2) 2. GAUGE Fuse (I/P J/B No.1) 3. Ignition Switch 4. Integration Relay (I/P J/B No.1) 5. Wire Harness	– – BE–14 BE–14 –

POWER SEAT CONTROL SYSTEM

Symptom	Suspect Area	See page
Power seat does not operate. (Door lock system does not operate)	1. POWER M–Fuse (I/P J/B No.1) 2. Wire Harness	– –
Power seat does not operate. (Door lock system is normal)	1. Power Seat Swtich (D,P) 2. Wire Harness	BE–78 –
”Slide operation” does not operate.	1. Power Seat Switch (D, P) 2. Wire Harness 3. Slide Motor (D, P)	BE–78 – BE–78
”Lifter Operation” does not operate.	1. Power Seat Switch (D, P) 2. Wire Harness 3. Lifter Motor (D, P)	BE–78 – BE–78
”Reclining Operation” does not operate.	1. Power Seat Switch (D, P) 2. Wire Harness 3. Reclining Motor (D, P)	BE–78 – BE–78

(D): Driver’s seat
(P): Passenger’s seat

POWER MIRROR CONTROL SYSTEM

Symptom	Suspect Area	See page
Mirror does not operate.	1. CIG Fuse (I/P J/B No.1) 2. Mirror Switch 3. Mirror Motor 4. Wire Harness	– BE–83 BE–83 –
Mirror operates abnormally.	1. Mirror Switch 2. Mirror Motor 3. Wire Harness	BE–83 BE–83 –

POWER SOURCE

LOCATION

BE0A0–03

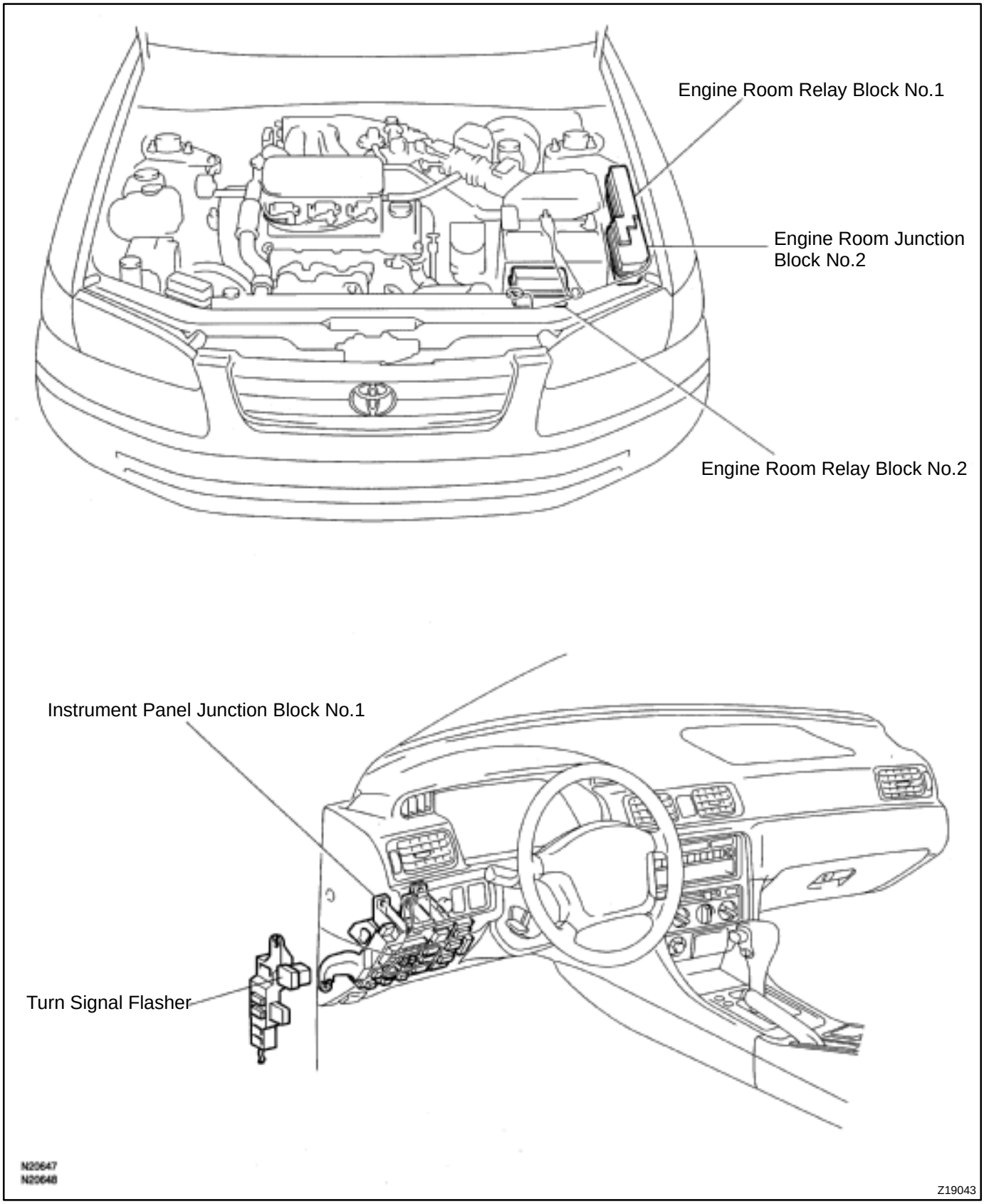

POWER OUTLET

LOCATION

BE0A1–03

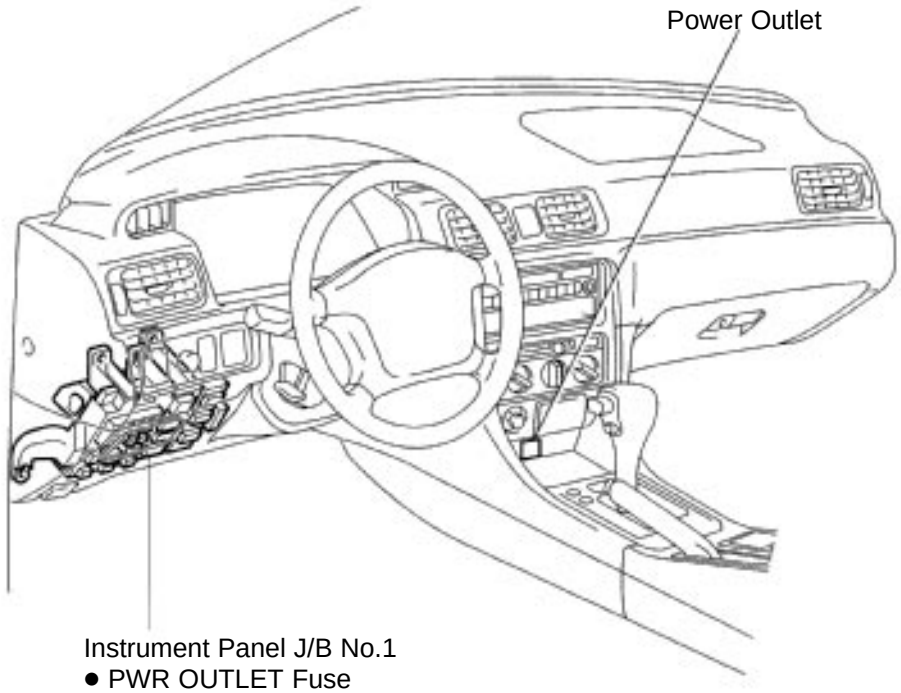

N20688

IGNITION SWITCH AND KEY UNLOCK WARNING SWITCH

BE0A2–03

LOCATION

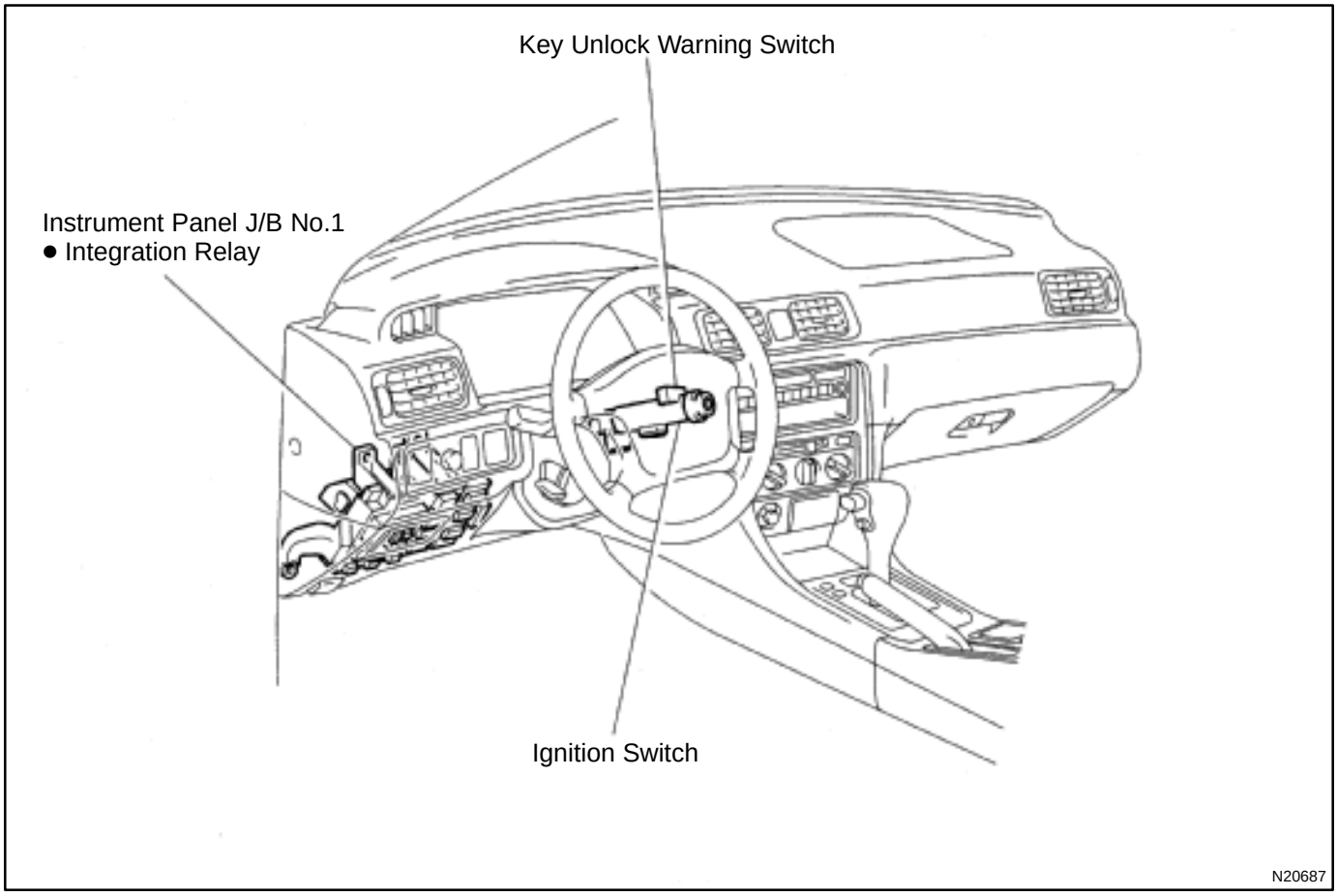

BE0A3–02

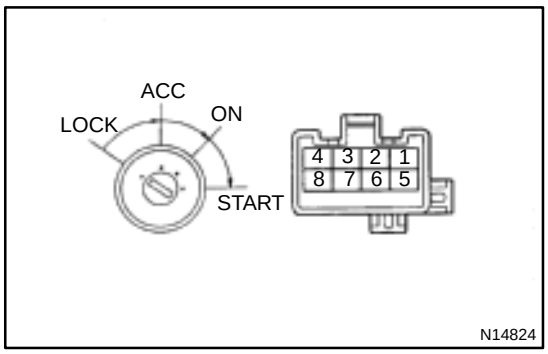

INSPECTION

1. INSPECT IGNITION SWITCH CONTINUITY

Switch position	Tester connection	Specified condition
LOCK	–	No continuity
ACC	2 – 3	Continuity
ON	2 – 3 – 4 6 – 7	Continuity
START	1 – 2 – 4 6 – 7 – 8	Continuity

If continuity is not as specified, replace the switch.

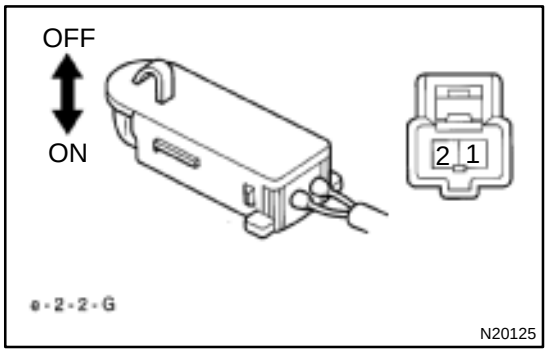

2. INSPECT KEY UNLOCK WARNING SWITCH CONTINUITY

Switch position	Tester connection	Specified condition
OFF (Key removed)	–	No continuity
ON (Key set)	1 – 2	Continuity

If continuity is not as specified, replace the switch.

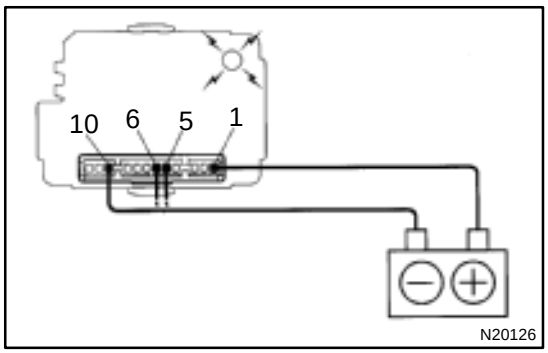

3. Key unlock warning system: INSPECT INTEGRATION RELAY (TYPE A) OPERATION

(a) Connect the positive (+) lead from the battery to terminal 1.

(b) Connect the negative (–) lead from the battery to terminals 5, 6 and 10.

(c) Check the buzzer sounds.

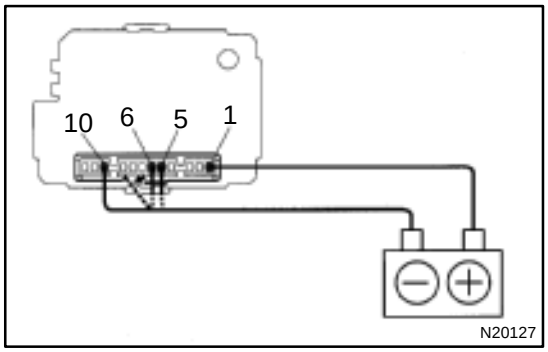

(d) Disconnect the negative (–) lead from the battery to terminal 6.

(e) Check that the buzzerr stops sounding.

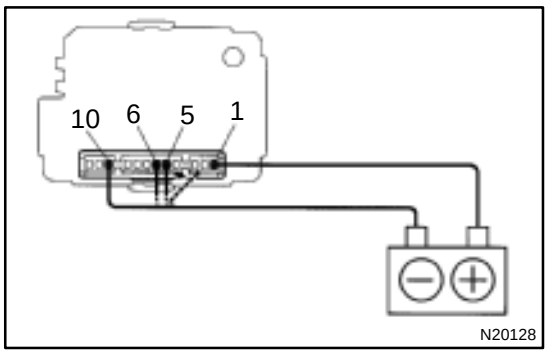

(f) Connect the negative (–) lead from the battery to terminal 6.
(g) Disconnect the negative (–) lead from the battery to terminal 5.
(h) Check that the buzzerr stops sounding.

If operation is not as specified, replace the relay.

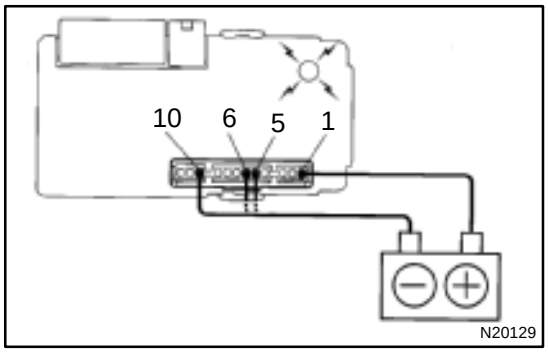

4. Key unlock warning system:
INSPECT INTEGRATION RELAY (TYPE B) OPERATION

(a) Connect the positive (+) lead from the battery to terminal 1.
(b) Connect the negative (–) lead from the battery to terminals 5, 6 and 10.
(c) Check the buzzerr sounds.

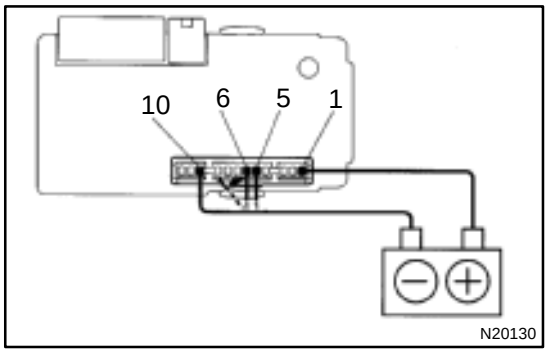

(d) Disconnect the negative (–) lead from the battery to terminal 6.
(e) Check that the buzzerr stops sounding.

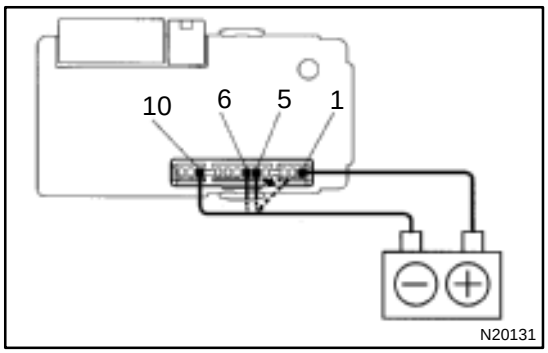

(f) Connect the negative (–) lead from the battery to terminal 6.
(g) Disconnect the negative (–) lead from the battery to terminal 5.
(h) Check that the buzzerr stops sounding.

If operation is not as specified, replace the relay.

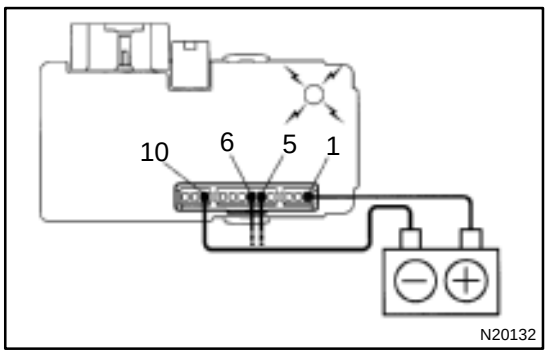

5. Key unlock warning system:
INSPECT INTEGRATION RELAY (TYPE C) OPERATION

(a) Connect the positive (+) lead from the battery to terminal 1.
(b) Connect the negative (–) lead from the battery to terminals 5, 6 and 10.
(c) Check the buzzerr sounds.

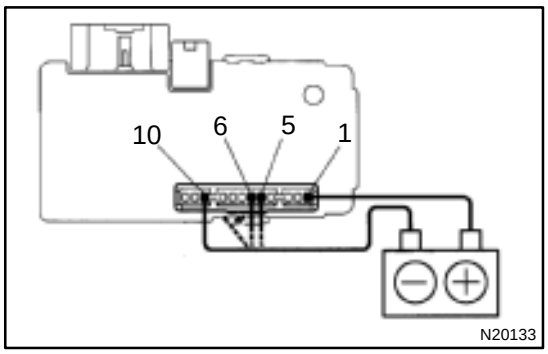

(d) Disconnect the negative (–) lead from the battery to terminal 6.
(e) Check that the buzzerr stops sounding.

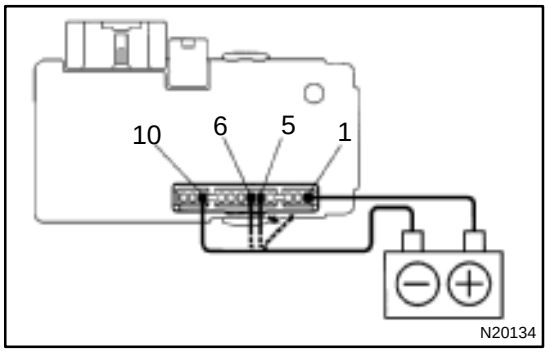

(f) Connect the negative (–) lead from the battery to terminal 6.
(g) Disconnect the negative (–) lead from the battery to terminal 5.
(h) Check that the buzzerr stops sounding.

If operation is not as specified, replace the relay.

Junction block side:

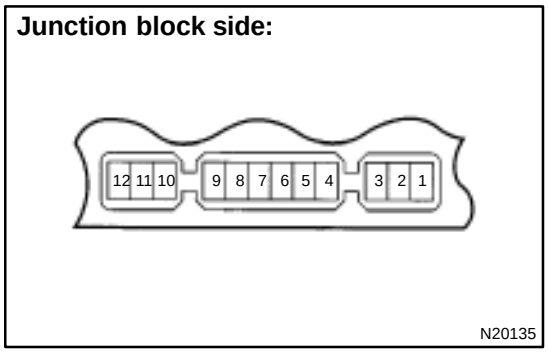

6. INSPECT INTEGRATION RELAY (TYPE A) CIRCUIT

(a) Remove the relay from the junction block No.1 and inspect the connector on the junction block side.

Tester connection	Condition	Specified condition
2 – Ground 4 – Ground	Passenger's door courtesy switch OFF (Door closed)	No continuity
2 – Ground 4 – Ground	Passenger's door courtesy switch ON (Door opened)	Continuity
5 – Ground	Key unlock warning switch OFF	No continuity
5 – Ground	Key unlock warning switch ON	Continuity
6 – Ground	Driver's door courtesy switch OFF	No continuity
6 – Ground	Driver's door courtesy switch ON	Continuity
8 – Ground	Buckle switch OFF (Seat belt unfastened)	No continuity
8 – Ground	Buckle switch ON (Seat belt fastened)	Continuity
10 – Ground	Constant	Continuity
1 – Ground	Constant	Battery positive voltage
7 – Ground 9 – Ground	Ignition switch LOCK or ACC	No voltage
7 – Ground 9 – Ground	Ignition switch ON	Battery positive voltage

Wire harness side:

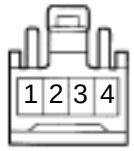

h-4-1 N20136

(b) Disconnect the connector from the integration relay and inspect the connector on the wire harness side.

Tester connection	Condition	Specified condition
1 – Ground	Light control switch OFF	No continuity
1 – Ground	Light control switch HEAD or TAIL	Continuity
4 – Ground	Light control switch OFF or TAIL	No continuity
4 – Ground	Light control switch HEAD	Continuity
2 – Ground 3 – Ground	Constant	Battery positive voltage

If the circuit is as specified, try replacing the relay with a new one.

If the circuit is not as specified, inspect the circuits connected to other parts.

Junction block side:

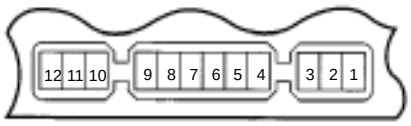

N20135

7. INSPECT INTEGRATION RELAY (TYPE B) CIRCUIT

(a) Remove the relay from the junction block No.1 and inspect the connector on the junction block side.

Tester connection	Condition	Specified condition
2 – Ground	All door courtesy switches OFF (Except Driver's Door/ Door closed)	No continuity
2 – Ground	One of the door courtesy switches ON (Except Driver's Door/ Door opened)	Continuity
4 – Ground	Door courtesy switches except that of the driver's door OFF (Door closed)	No continuity
4 – Ground	One of the door courtesy switches except that of the driver's door ON (Door opened)	Continuity

5 – Ground	Key unlock warning switch OFF	No continuity
5 – Ground	Key unlock warning switch ON	Continuity
6 – Ground	Driver's door courtesy switch OFF (Door closed)	No continuity
6 – Ground	Driver's door courtesy switch ON (Door opened)	Continuity
8 – Ground	Buckle switch OFF (Seat belt unfastened)	No continuity
8 – Ground	Buckle switch ON (Seat belt fastened)	Continuity
10 – Ground	Constant	Continuity
1 – Ground	Constant	Battery positive voltage
7 – Ground 9 – Ground	Ignition switch LOCK or ACC	No voltage
7 – Ground 9 – Ground	Ignition switch ON	Battery positive voltage
11 – Ground	Ignition switch LOCK	No voltage
11 – Ground	Ignition switch ACC or ON	Battery positive voltage

Wire harness side:

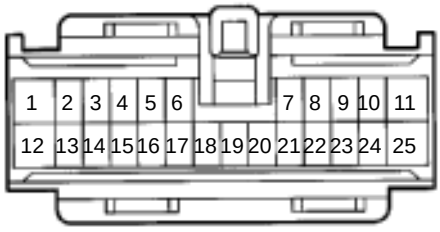

Connector "A"

Wire harness side:

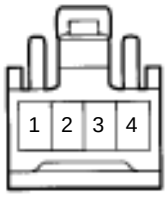

eh–25–1
h–4–1

Connector "B"

N20137

(b) Disconnect the connector from the integration relay and inspect the connectors on the wire harness side.

Tester connection	Condition	Specified condition
A3 – Ground	Constant	Continuity
A5 – Ground	Driver's door unlock detection switch OFF (Door locked)	No continuity
A5 – Ground	Driver's door unlock detection switch ON (Door unlocked)	Continuity
A6 – Ground	Passenger's door courtesy switch OFF (Door closed)	No continuity

A6 – Ground	Passenger's door courtesy switch ON (Door opened)	Continuity
A7 – Ground	Passenger's door unlock detection switch OFF (Door locked)	No continuity
A7 – Ground	Passenger's door unlock detection switch ON (Door unlocked)	Continuity
A9 – Ground	Rear door unlock detection switch OFF (Door locked)	No continuity
A9 – Ground	Rear door unlock detection switch ON (Door unlocked)	Continuity
A11 – A12 A12 – A25	Constant	Continuity
A16 – Ground	Door lock manual switch OFF or UNLOCK	No continuity
A16 – Ground	Door lock manual switch LOCK	Continuity
A17 – Ground	Door lock manual switch OFF or LOCK	No continuity
A17 – Ground	Door lock manual switch UNLOCK	Continuity
A18 – Ground	Driver's and passenger's door key lock and unlock switch OFF or UNLOCK	No continuity
A18 – Ground	Driver's or passenger's door key lock and unlock switch LOCK	Continuity
A19 – Ground	Driver's door key lock and unlock switch OFF or LOCK	No continuity
A19 – Ground	Driver's door key lock and unlock switch UNLOCK	Continuity
A20 – Ground	Passenger's door key lock and unlock switch OFF or LOCK	No continuity
A20 – Ground	Passenger's door key lock and unlock switch UNLOCK	Continuity
A1 – Ground	Constant	Battery positive voltage
B1 – Ground	Light control switch OFF	No voltage
B1 – Ground	Light control switch TAIL or HEAD	Battery positive voltage
B4 – Ground	Light control switch OFF or TAIL	No voltage
B4 – Ground	Light control switch HEAD	Battery positive voltage
B2 – Ground B3 – Ground	Constant	Battery positive voltage

If the circuit is as specified, try replacing the relay with a new one.

If the circuit is not as specified, inspect the circuits connected to other parts.

Junction block side:

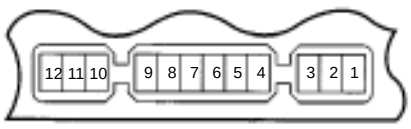

N20135

8. INSPECT INTEGRATION RELAY (TYPE C) CIRCUIT

(a) Remove the relay from the junction block No.1 and inspect the connector on the junction block side.

Tester connection	Condition	Specified condition
2 – Ground	All door courtesy switches OFF (Except Driver's Door/ Door closed)	No continuity
2 – Ground	One of the door courtesy switches ON (Except Driver's Door/ Door opened)	Continuity
4 – Ground	Door courtesy switches except that of the driver's door OFF (Door closed)	No continuity
4 – Ground	One of the door courtesy switches except that of the driver's door ON (Door opened)	Continuity
5 – Ground	Key unlock warning switch OFF	No continuity
5 – Ground	Key unlock warning switch ON	Continuity
6 – Ground	Driver's door courtesy switch OFF (Door closed)	No continuity
6 – Ground	Driver's door courtesy switch ON (Door opened)	Continuity
8 – Ground	Buckle switch OFF (Seat belt unfastened)	No continuity
8 – Ground	Buckle switch ON (Seat belt fastened)	Continuity
10 – Ground	Constant	Continuity
1 – Ground	Constant	Battery positive voltage
7 – Ground 9 – Ground	Ignition switch LOCK or ACC	No voltage
7 – Ground 9 – Ground	Ignition switch ON	Battery positive voltage
11 – Ground	Ignition switch LOCK	No voltage
11 – Ground	Ignition switch ACC or ON	Battery positive voltage

Wire harness side:

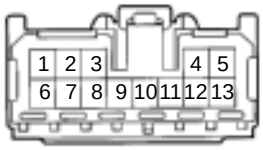

Connector "A"

Wire harness side:

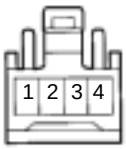

Connector "B"

e-13-1-A
h-4-1

N20138

(b) Disconnect the connector from the integration relay and inspect the connectors on the wire harness side.

Tester connection	Condition	Specified condition
A1 – Ground	Door lock manual switch OFF or UNLOCK	No continuity
A1 – Ground	Door lock manual switch LOCK	Continuity
A2 – Ground	Door lock manual switch OFF or LOCK	No continuity
A2 – Ground	Door lock manual switch UNLOCK	Continuity
A3 – Ground	Driver's and passenger's door key lock and unlock switch OFF or UNLOCK	No continuity
A3 – Ground	Driver's or passenger's door key lock and unlock switch LOCK	Continuity
A4 – Ground	Driver's door key lock and unlock switch OFF or LOCK	No continuity
A4 – Ground	Driver's door key lock and unlock switch UNLOCK	Continuity
A5 – Ground	Passenger's door key lock and unlock switch OFF or LOCK	No continuity
A5 – Ground	Passenger's door key lock and unlock switch UNLOCK	Continuity
A6 – A7	Constant	Continuity
A8 – Ground	Passenger's door courtesy switch OFF (Door closed)	No continuity
A8 – Ground	Passenger's door courtesy switch ON (Door opened)	Continuity
A9 – Ground	Driver's door unlock detection switch OFF (Door closed)	No continuity
A9 – Ground	Driver's door unlock detection switch ON (Door opened)	Continuity
A10 – Ground	Passenger's door unlock detection switch OFF (Door closed)	No continuity
A10 – Ground	Passenger's door unlock detection switch ON (Door opened)	Continuity
A11 – Ground	Rear door unlock detection switch OFF (Door closed)	No continuity
A11 – Ground	Rear door unlock detection switch ON (Door opened)	Continuity
A12 – Ground	Constant	Continuity
A13 – Ground	Constant	Battery positive voltage
B1 – Ground	Light control switch OFF	No voltage
B1 – Ground	Light control switch TAIL or HEAD	Battery positive voltage
B4 – Ground	Light control switch OFF or TAIL	No voltage
B4 – Ground	Light control switch HEAD	Battery positive voltage
B2 – Ground B3 – Ground	Constant	Battery positive voltage

If the circuit is as specified, try replacing the relay with a new one.

If the circuit is not as specified, inspect the circuits connected to other parts.

HEADLIGHT AND TAILLIGHT SYSTEM

BE0A4–02

LOCATION

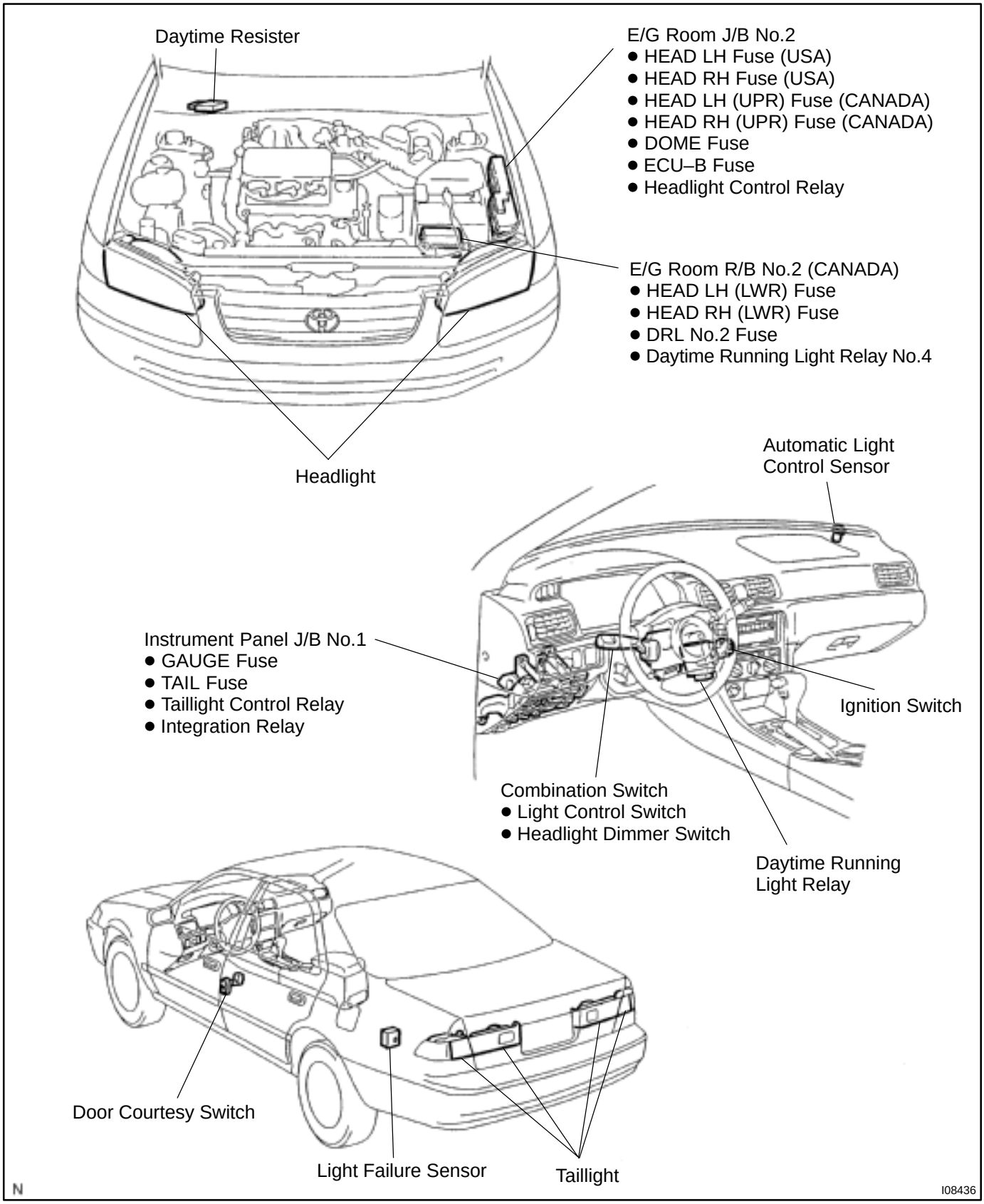

BE0A5–02

COMPONENTS

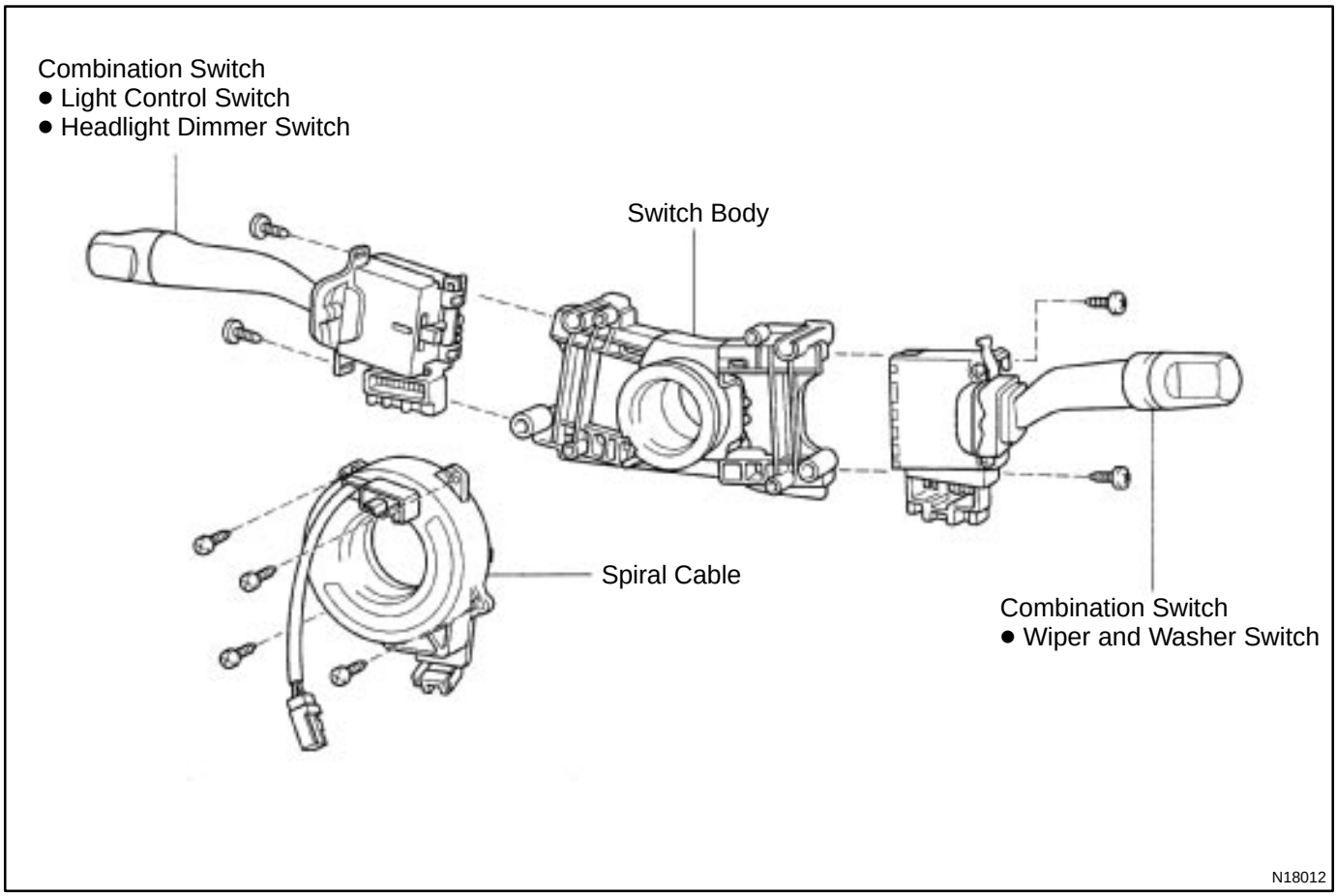

BE10D–01

INSPECTION

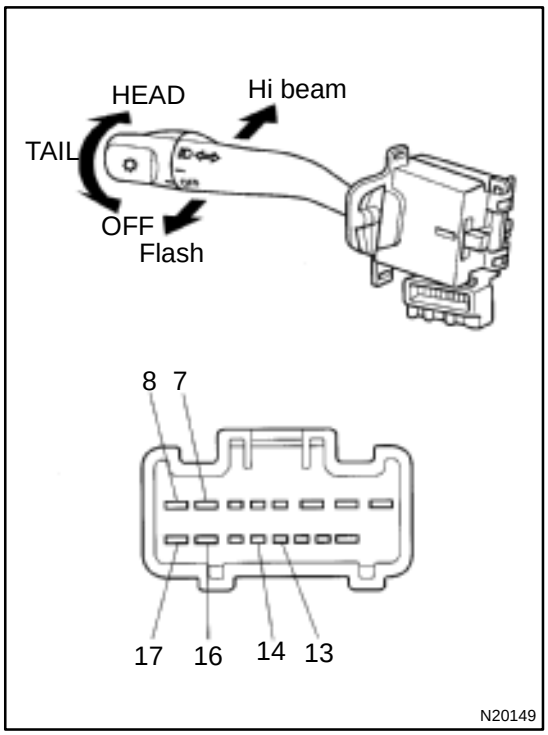

1. INSPECT LIGHT CONTROL SWITCH CONTINUITY

Switch position	Tester connection	Specified condition
OFF	–	No continuity
TAIL	14 – 16	Continuity
HEAD	13 – 14 – 16	Continuity

If continuity is not as specified, replace the switch.

2. INSPECT HEADLIGHT DIMMER SWITCH CONTINUITY

Switch position	Tester connection	Specified condition
Low beam	16 – 17	Continuity
High beam	7 – 16	Continuity
Flash	7 – 8 – 16	Continuity

If continuity is not as specified, replace the switch.

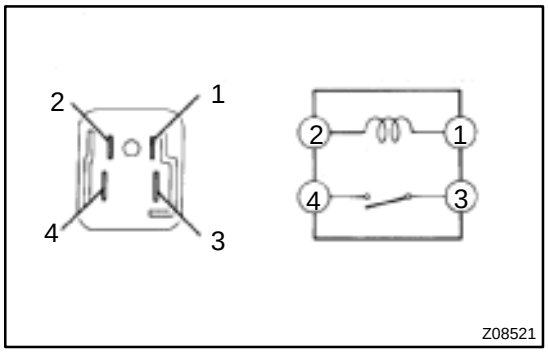

3. INSPECT HEADLIGHT CONTROL RELAY CONTINUITY

Condition	Tester connection	Specified condition
Constant	1 – 2	Continuity
Apply B+ between terminals 1 and 2.	3 – 4	Continuity

If continuity is not as specified, replace the relay.

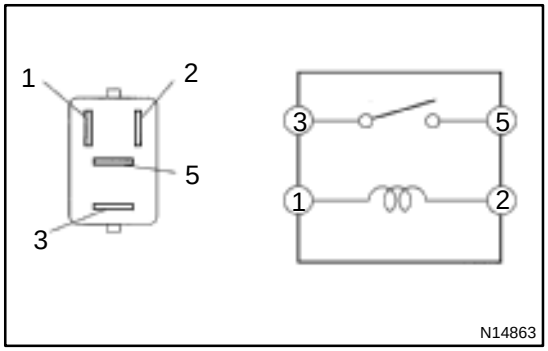

4. INSPECT TAILLIGHT CONTROL RELAY CONTINUITY

Condition	Tester connection	Specified condition
Constant	1 – 2	Continuity
Apply B+ between terminals 1 and 2.	3 – 5	Continuity

If continuity is not as specified, replace the relay.

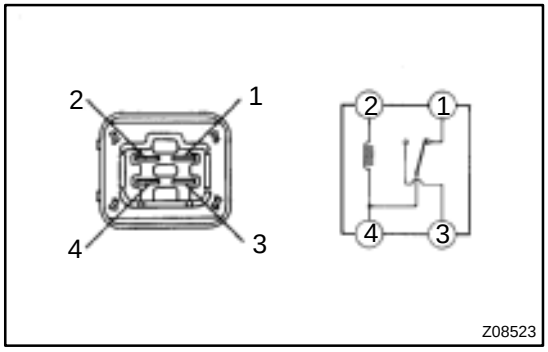

5. INSPECT HEADLIGHT DIMMER RELAY CONTINUITY

Condition	Tester connection	Specified condition
Constant	1 – 4, 2 – 4	Continuity
Apply B+ between terminals 2 and 4.	3 – 4	Continuity

If continuity is not as specified, replace the relay.

Wire harness side:



Y I08219

6. INSPECT DAYTIME RUNNING LIGHT RELAY (MAIN) CIRCUIT

Disconnect the connector from the relay and inspect the connector on the wire harness side.

Tester connection	Condition	Specified condition
2 – Ground	Light control switch position OFF or TAIL	No continuity
2 – Ground	Light control switch position HEAD	Continuity
3 – Ground	Headlight dimmer switch position Low beam	No continuity
3 – Ground	Headlight dimmer switch position High beam of Flash	Continuity
4 – Ground	Brake fluid level warning position OFF	No continuity
4 – Ground	Brake fluid level warning position ON	Continuity
12 – Ground	Constant	Continuity
14 – Ground	Parking brake switch position OFF (Parking brake lever released)	No continuity
14 – Ground	Parking brake switch position ON (Parking brake lever pulled up)	Continuity
17 – Ground	Light control switch position OFF or HEAD	No voltage
17 – Ground	Light control switch position TAIL	Continuity
20 – Ground	Constant	Continuity
21 – Ground	Constant	Continuity
13 – Ground	Engine Stop	No voltage
13 – Ground	Engine Running	Battery positive voltage
16 – Ground	Constant	Battery positive voltage
18 – Ground	Ground terminal 19	Battery positive voltage
19 – Ground	Constant	Battery positive voltage
22 – Ground	Constant	Battery positive voltage
23 – Ground	Ignition switch position LOCK or ACC	No voltage
23 – Ground	Ignition switch position ON or START	Battery positive voltage

If circuit is as specified, try replacing the relay with a new one.
If circuit is not as specified, inspect the circuits connected to other parts.

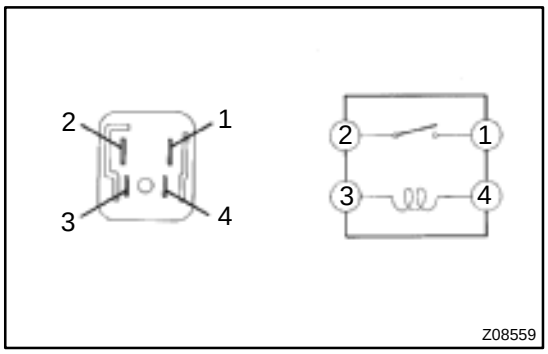

7. INSPECT DAYTIME RUNNING LIGHT NO.4 RELAY CONTINUITY

Condition	Tester connection	Specified condition
Constant	3 – 4	Continuity
Apply B+ between terminals 3 and 4.	1 – 2	Continuity

If continuity is not as specified, replace the relay.

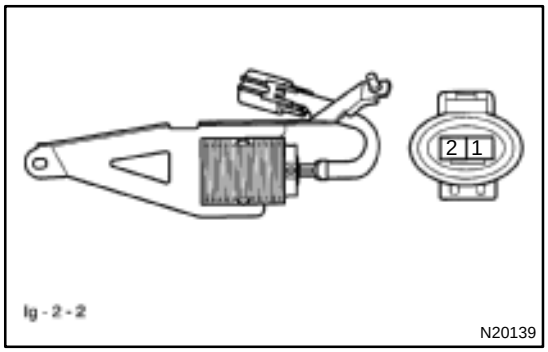

8. INSPECT DAYTIME RUNNING LIGHT RESISTER CONTINUITY

Condition	Tester connection	Specified condition
Constant	1 – 2	Approx. 250mΩ

If continuity is not as specified, replace the resistor.

9. INSPECT LIGHT AUTO TURN OFF SYSTEM
(See Integration relay circuit on page BE–14)

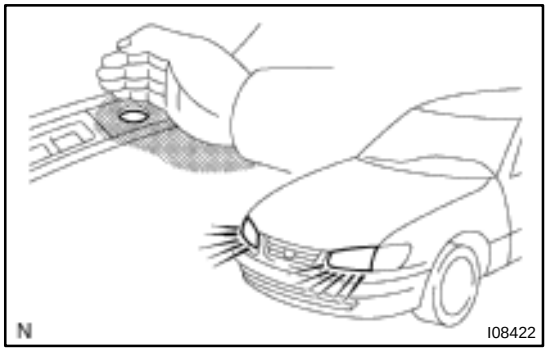

10. INSPECT AUTOMATIC LIGHT CONTROL

(a) Turn the ignition switch ON.
(b) Turn the light control switch to OFF.
(c) Parking brake lever released.
(d) Gradually cover the top of the sensor.
(e) Verify that the lights should turn ON the accessory lights and the headlights.

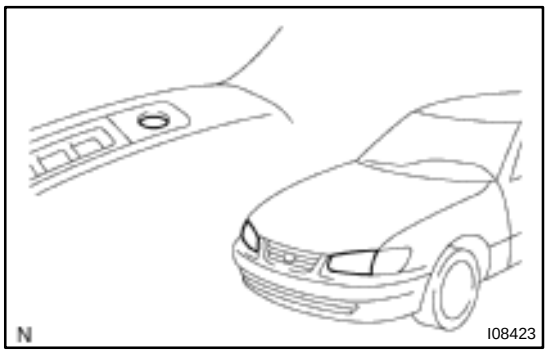

11. INSPECT AUTOMATIC LIGHT CONTROL

(a) Gradually expose the sensor.
(b) Verify that the lights should turn OFF the headlights and the accessory lights.

12. INSPECT LIGHT–OFF CONDITION

(a) Turn the ignition switch ON.
(b) Gradually cover the top of the sensor.
Lights auto ON:

13. INSPECT LIGHTS–ON CONDITION

(a) Open the driver's door while the ignition switch is OFF.
(b) Turn the light control switch to OFF leaving the door open and cover the top of the sensor, and verify that the lights go on when the ignition switch is turned ON.

Wire harness side:



I01254

14. INSPECT AUTOMATIC LIGHT CONTROL SENSOR CIRCUIT

Connector disconnected:

Disconnect the connector from the sensor and inspect the connector on the wire harness side, as shown in the table.

Tester connection	Condition	Specified condition
3 – Ground	Constant	Constant
1 – Ground	Ignition switch LOCK or ACC	No voltage
1 – Ground	Ignition switch ON	Battery positive voltage
4 – Ground	Ignition switch LOCK or ACC	No voltage
4 – Ground	Ignition switch ON	5.2 – 9.0 v

If circuit is as specified, perform the inspection on the following page.

If the circuit is not as specified, inspect the circuit connected to other parts.

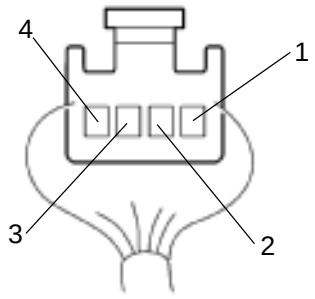

I01255

15. INSPECT AUTOMATIC LIGHT CONTROL SENSOR CIRCUIT

Connector disconnected:

Connect the wire harness side connector to the sensor and inspect wire harness side connector from the back side, as shown.

HINT:

- Ignition switch ON.
- Light control switch OFF.
- Vehicle's surroundings are bright.

Tester connection	Condition	Specified condition
3 – Ground	Constant	Continuity
1 – Ground	Ignition switch LOCK or ACC	No voltage
1 – Ground	Ignition switch ON	9.5 V or more
Vehicle under the direct sun light. (Sensor is not covered)		Taillight and Headlight are ON.

If circuit is as specified, try replacing the sensor with a new one.

If the circuit is not as specified, inspect the circuit connected to other parts.

BE0A7–02

ADJUSTMENT

1. ADJUST HEADLIGHT AIMING

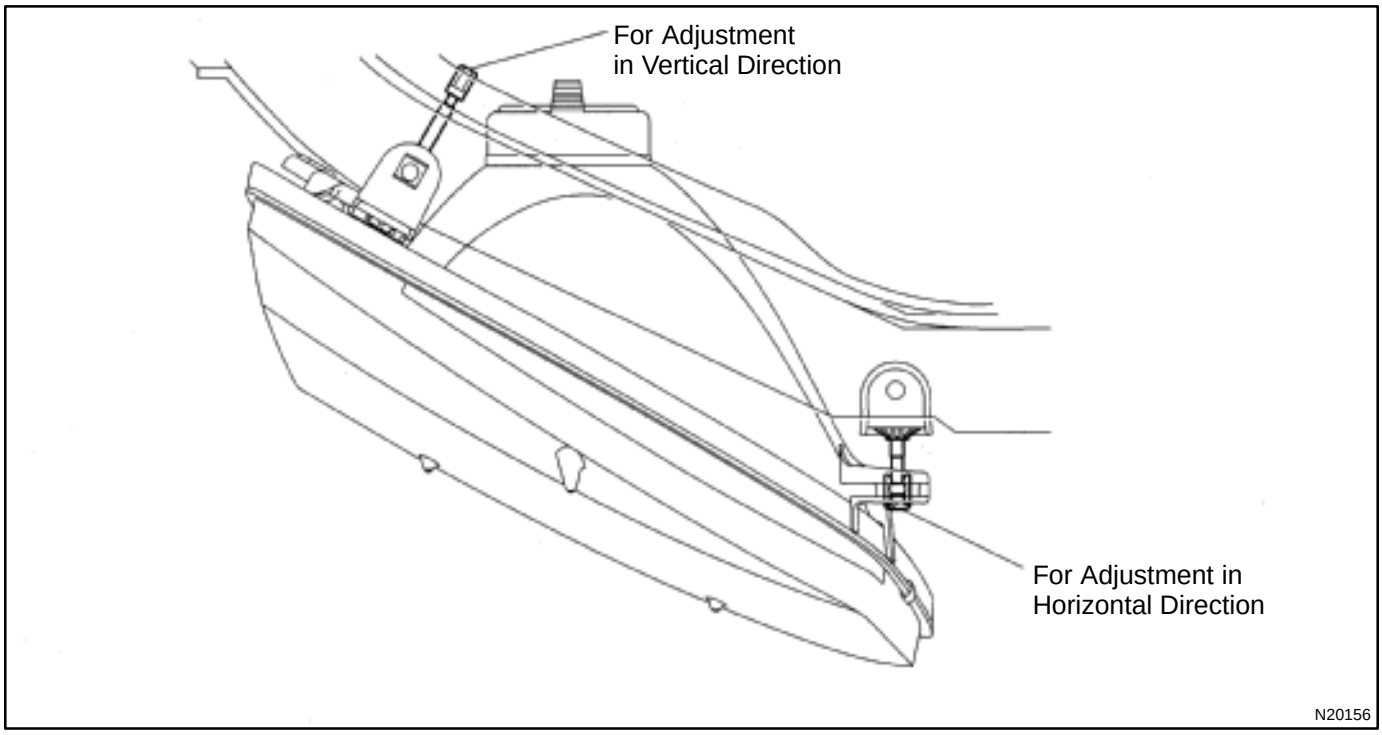

2. ADJUST SPIRAL CABLE

(See page SR–16)

TURN SIGNAL AND HAZARD WARNING SYSTEM

BE0A8–03

LOCATION

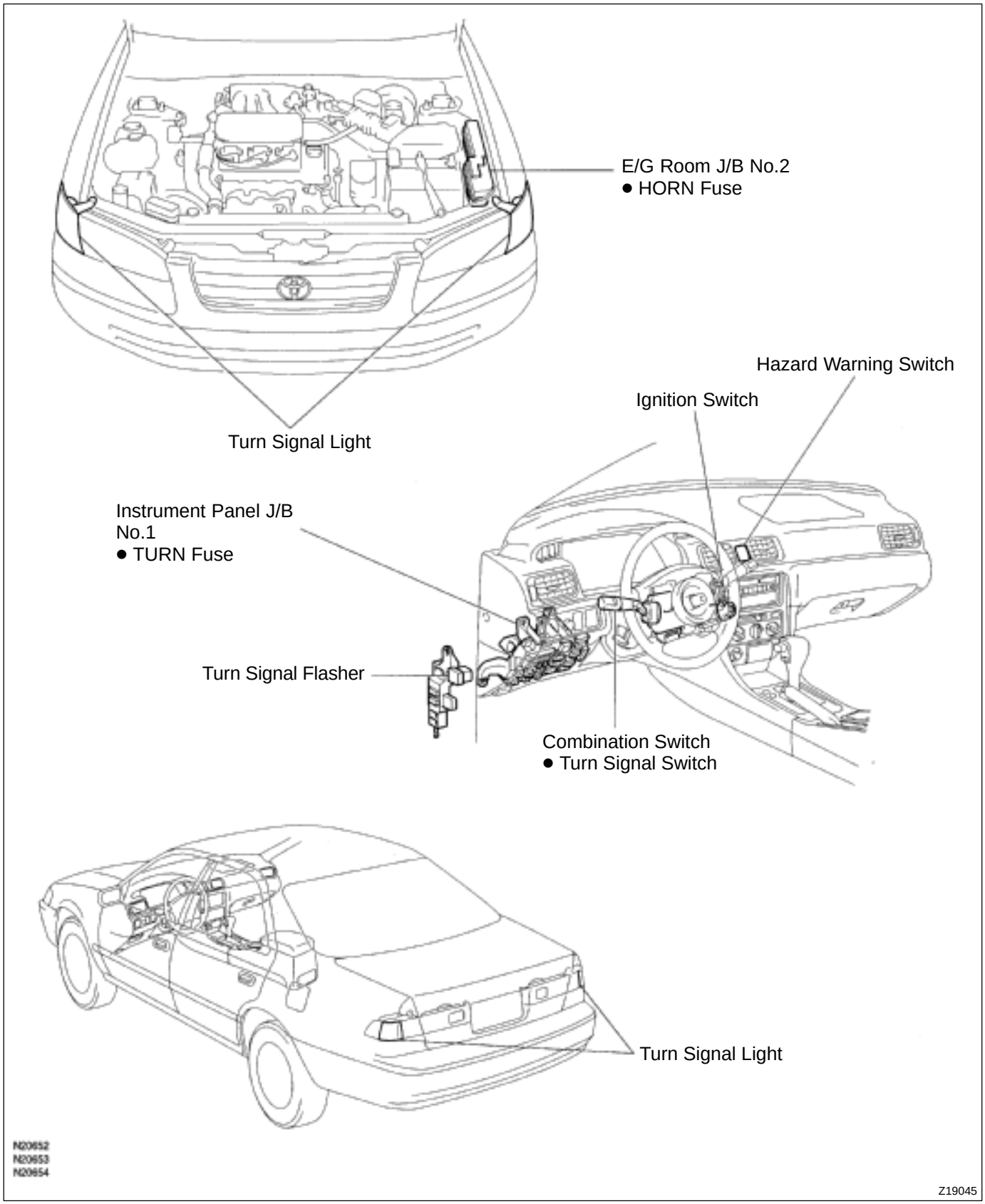

BE0A9–02

INSPECTION

1. INSPECT TURN SIGNAL SWITCH CONTINUITY

Switch position	Tester connection	Specified condition
Left turn	1 – 2	Continuity
Neutral	–	No continuity
Right turn	2 – 3	Continuity

If continuity is not as specified, replace the switch.

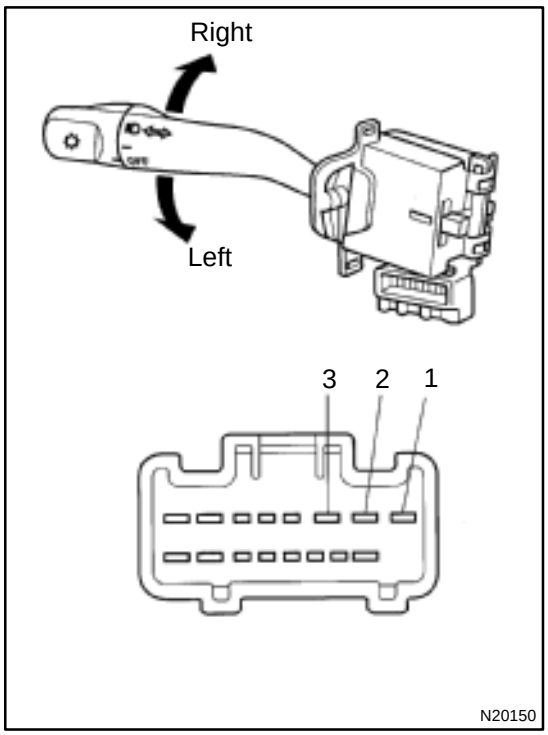

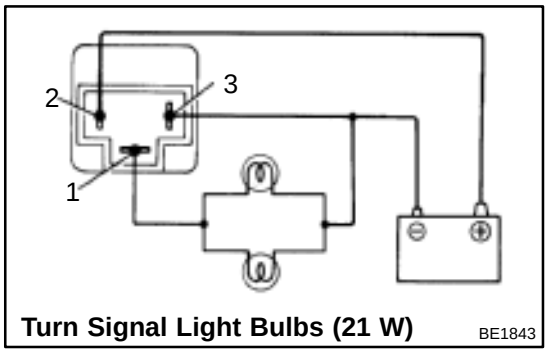

Turn Signal Light Bulbs (21 W)

2. INSPECT TURN SIGNAL FLASHER OPERATION

(a) Connect the positive (+) lead from the battery to terminal 2 and the negative (–) lead to terminal 3.

(b) Connect the 2 turn signal light bulbs in parallel to each other to terminals 1 and 3, check that the bulbs flash.

HINT:

The turn signal lights should flash 60 to 120 times per minute. If one of the front or rear turn signal lights has an open circuit, the number of flashes will be more than 140 per minute.

If operation is not as specified, replace the flasher.

3. INSPECT HAZARD WARNING SWITCH CONTINUITY

Switch position	Tester connection	Specified condition
Switch OFF	7 – 10	Continuity
Switch ON	5 – 6 – 9 7 – 8	Continuity
Illumination circuit	2 – 3	Continuity

If continuity is not as specified, replace the switch.

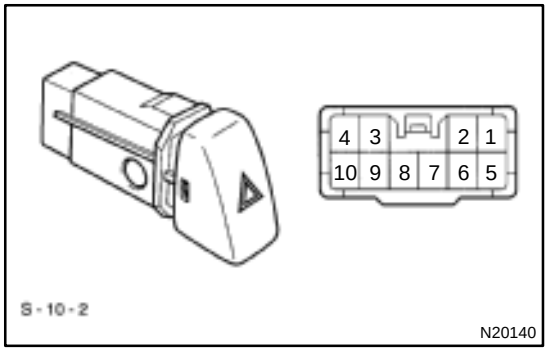

INTERIOR LIGHT SYSTEM

BE0AA–03

LOCATION

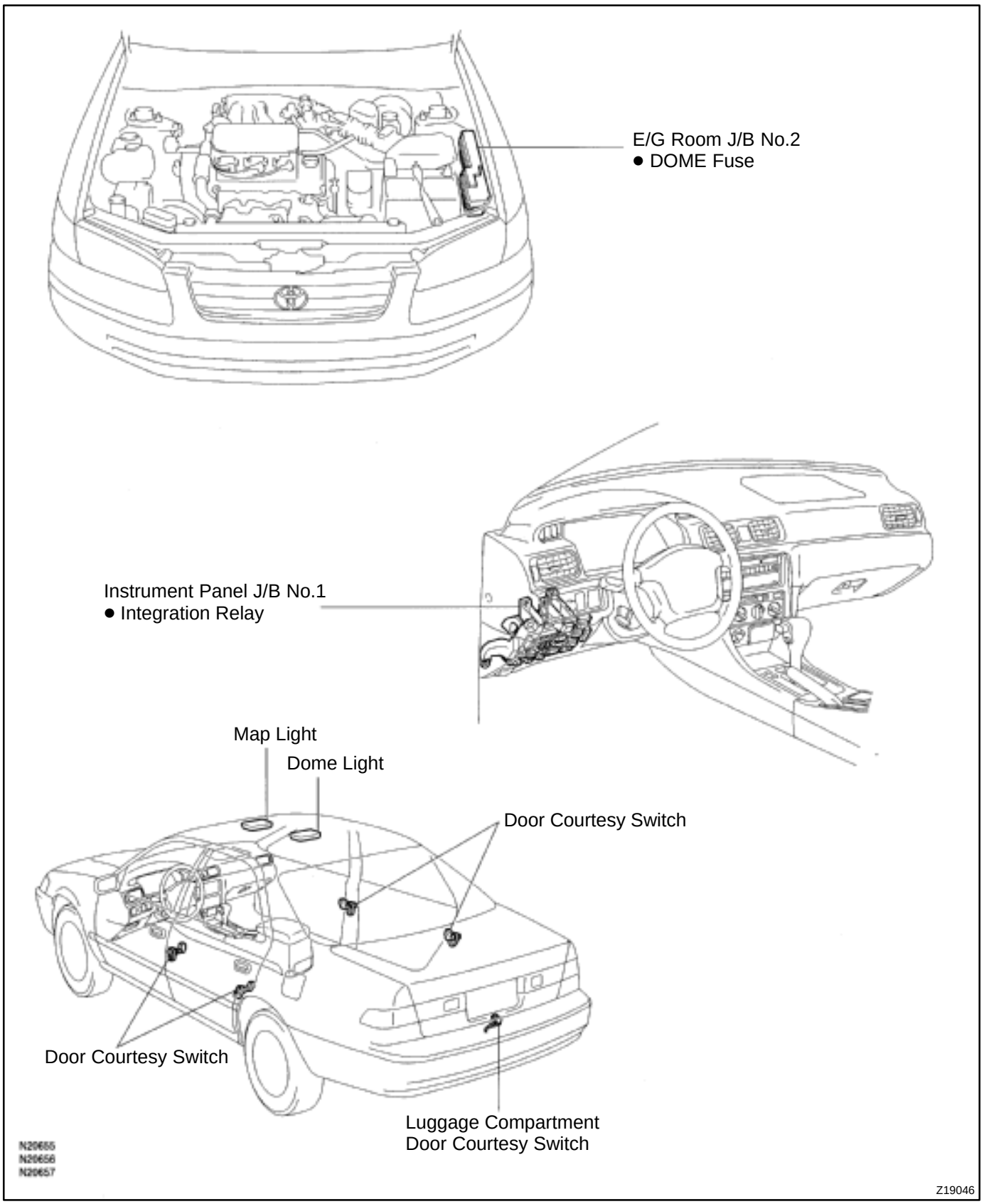

BE0AB–03

INSPECTION

1. INSPECT MAP LIGHT SWITCH CONTINUITY

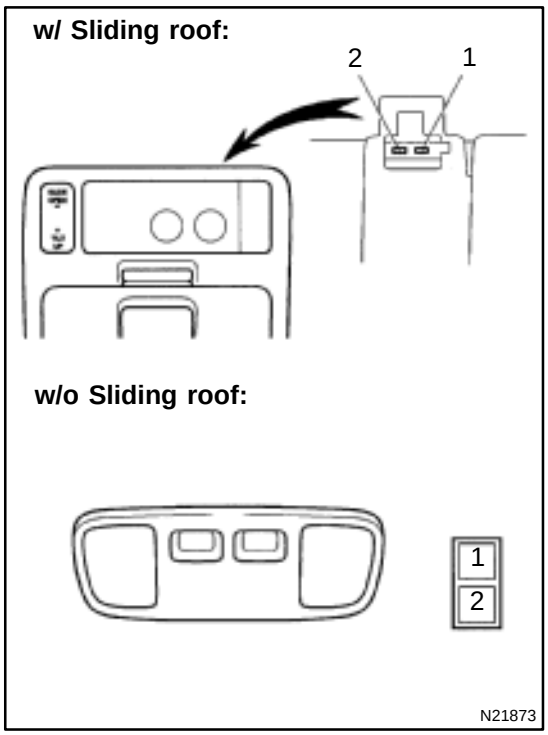

Switch position	Tester connection	Specified condition
OFF	–	No continuity
ON	1 – 2	Continuity

If continuity is not as specified, replace the light assembly or bulb.

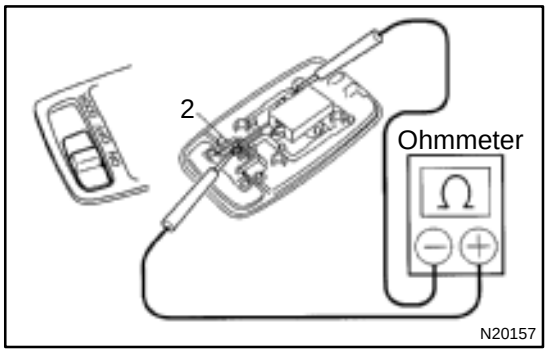

2. INSPECT DOME LAMP SWITCH

(a) Disconnect the connector from the dome lamp.

(b) Turn the dome lamp switch ON, check that continuity exists between terminal 2 and body ground.

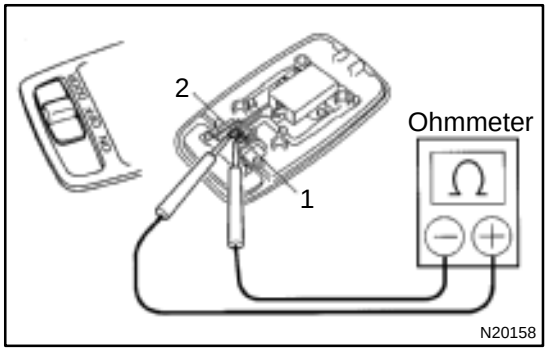

(c) Turn the dome lamp switch DOOR, check that there is continuity exists between terminal 1 and 2.

If operation is not as specified, replace the switch.

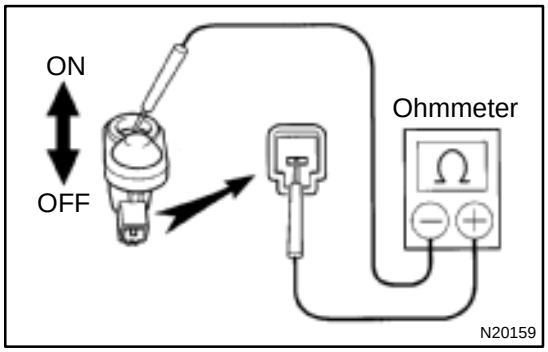

3. INSPECT DOOR COURTESY SWITCH CONTINUITY

(a) Check that continuity exists between terminal and the switch body with the switch ON (switch pin released: opened door).

(b) Check that no continuity exists between terminal and the switch body with the switch OFF (switch pin pushed in: closed doors).

If operation is not as specified, replace the switch.

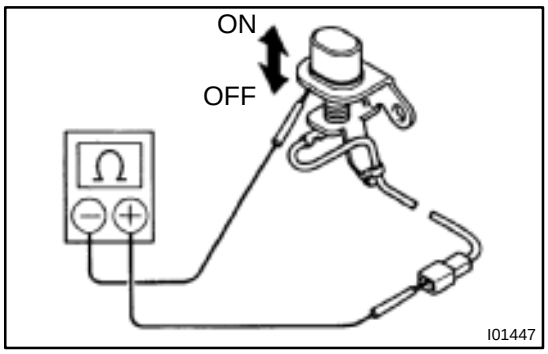

4. INSPECT LUGGAGE COMPARTMENT DOOR COURTESY SWITCH CONTINUITY

(a) Check that continuity exists between terminal and switch body with the switch ON (switch pin released: opened door).

(b) Check that no continuity exists between the terminal and switch body with the switch OFF (switch pin pushed in: closed door).

If operation is not as specified, replace the switch.

5. INSPECT ILLUMINATED ENTRY SYSTEM

(See Integration relay circuit on page BE–14)

BACK–UP LIGHT SYSTEM

BE0AC–02

LOCATION

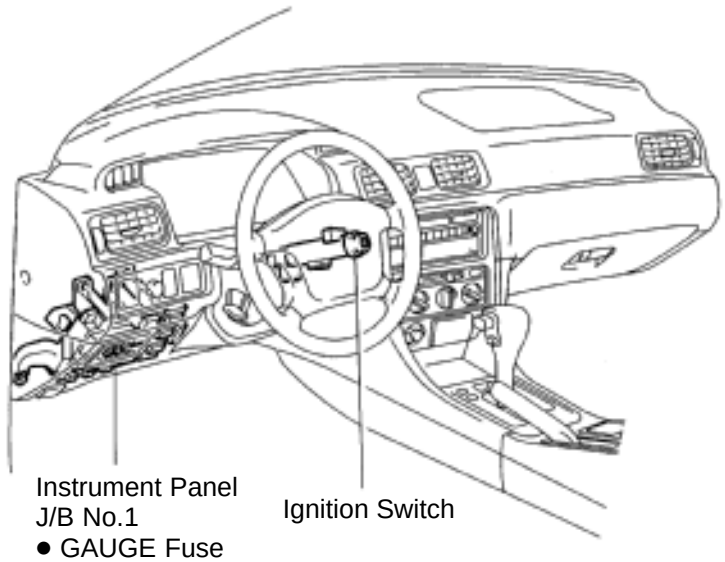

Instrument Panel
J/B No.1
● GAUGE Fuse

Ignition Switch

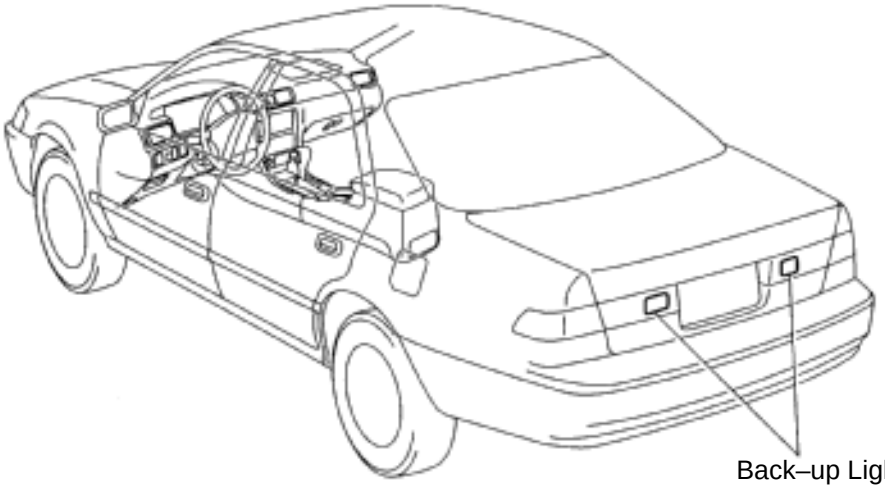

Back–up Light

5S–FE engine:

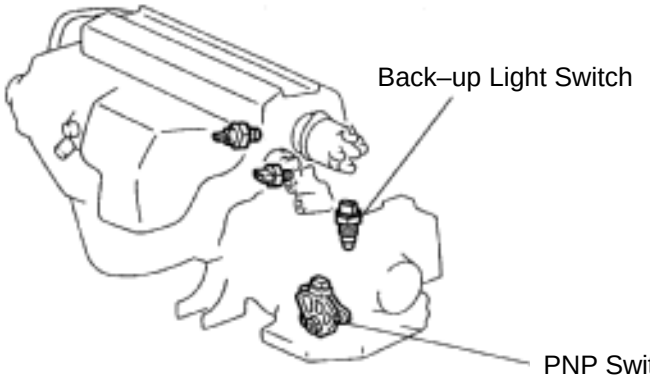

Back–up Light Switch

PNP Switch

N20658
N20659
N20660

1MZ–FE engine:

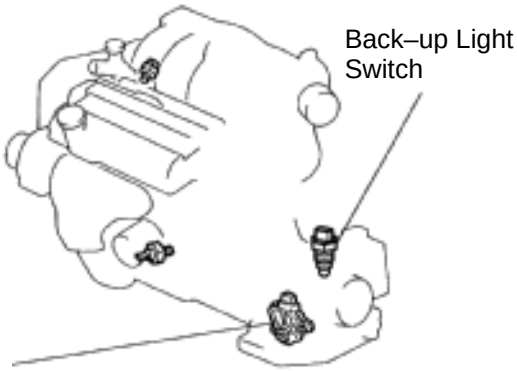

Back–up Light Switch

Z19047

BE0AD–02

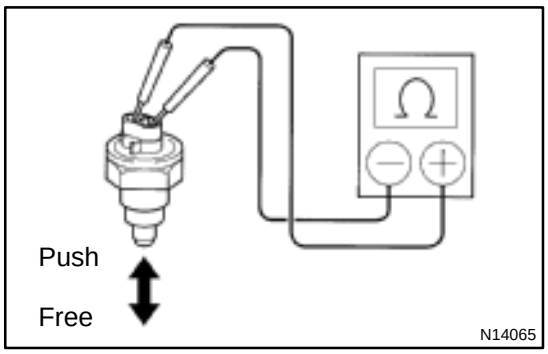

INSPECTION

INSPECT BACK–UP LIGHT SWITCH CONTINUITY

Condition	Tester connection	Specified condition
Free	–	No continuity
Push	1 – 2	Continuity

If continuity is not as specified, replace the switch.

STOP LIGHT SYSTEM

LOCATION

BE0AE–02

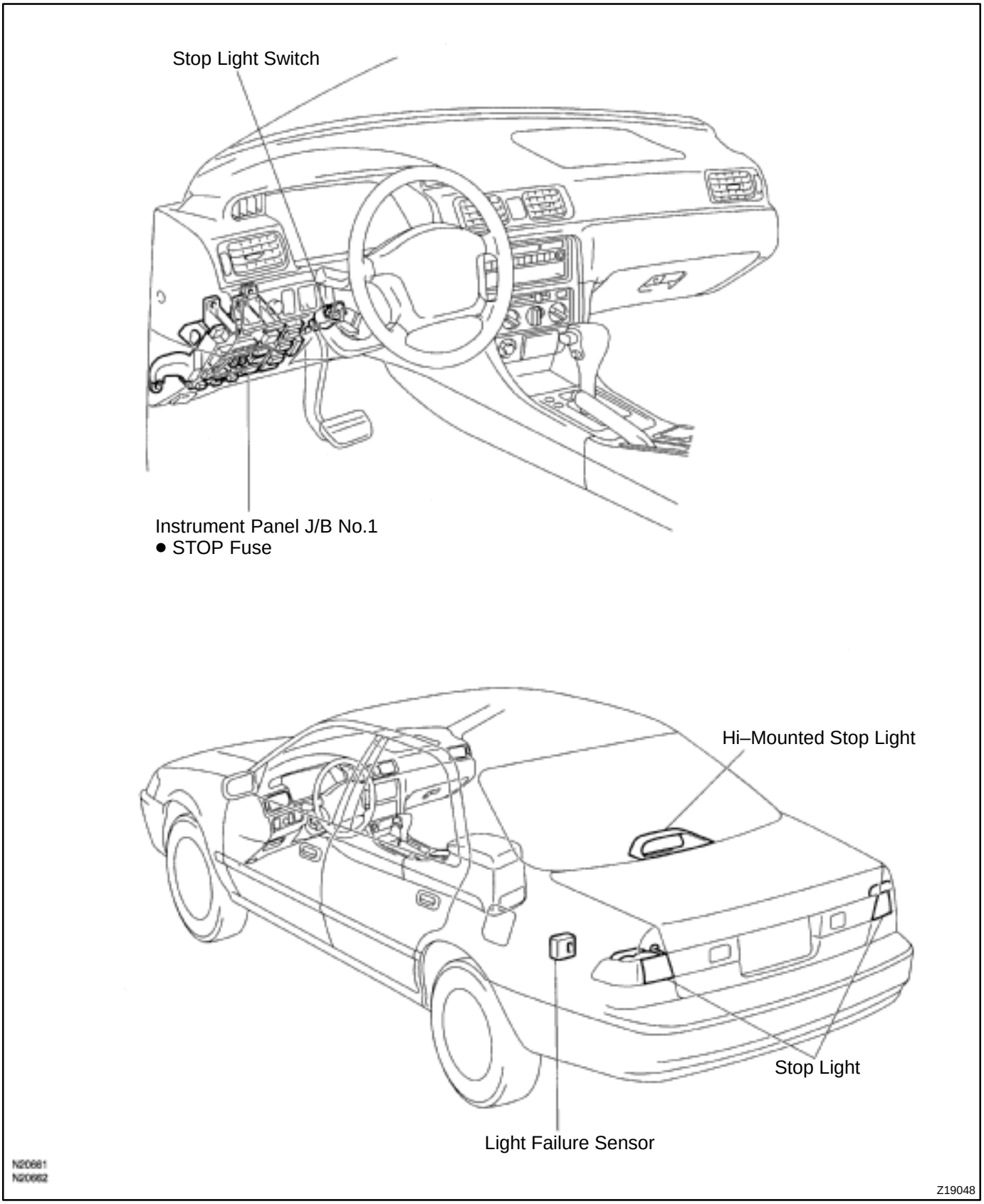

BE0AF–02

INSPECTION

1. w/o Cruise control:
INSPECT STOP LIGHT SWITCH CONTINUITY

Switch position	Tester connection	Specified condition
Switch pin free	1 – 2	Continuity
Switch pin pushed in	1 – 2	No continuity

If continuity is not as specified, replace the switch.

2. w/ Cruise control:
INSPECT STOP LIGHT SWITCH CONTINUITY

Switch position	Tester connection	Specified condition
Switch pin free	1 – 2	Continuity
Switch pin pushed in	1 – 2	No continuity
Switch pin free	3 – 4	No continuity
Switch pin pushed in	3 – 4	Continuity

If continuity is not as specified, replace the switch.

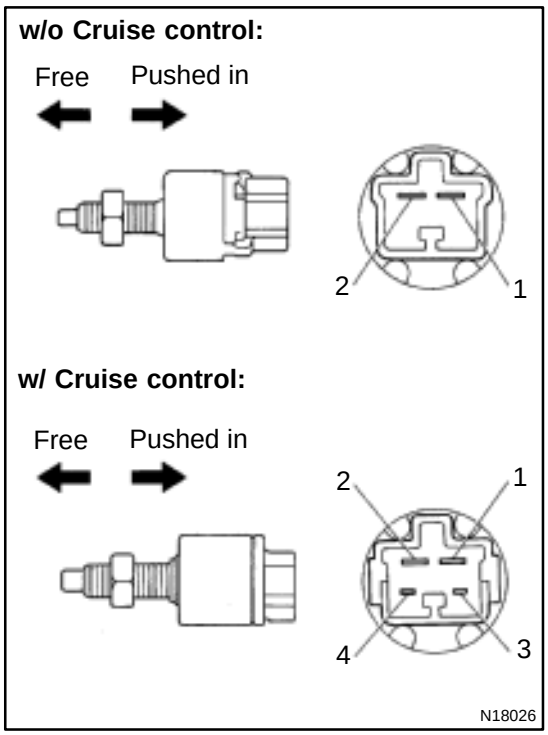

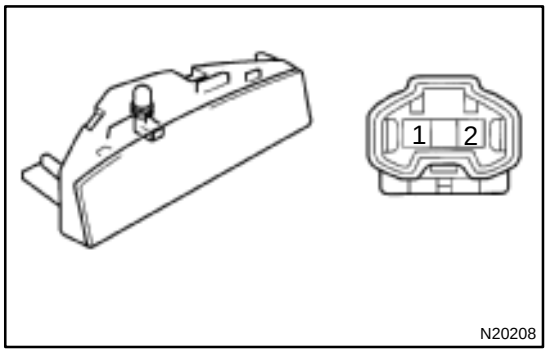

3. INSPECT HI–MOUNTED STOP LIGHT ASSEMBLY CONTINUITY

Using the ohmmeter, check that continuity exists between terminals.

If continuity is not as specified, replace the bulb or light assembly.

Wire harness side:

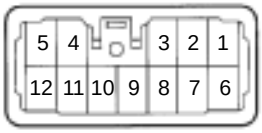

e–12–2–B N20209

4. INSPECT LIGHT FAILURE RELAY CIRCUIT

Disconnect the connector from the relay and inspect the connector on the wire harness side, as shown.

Tester connection	Condition	Specified condition
1 – Ground	Constant	Continuity*
2 – Ground	Constant	Continuity*
9 – Ground	Constant	Continuity*
11 – Ground	Constant	Continuity
3 – Ground	Light control switch OFF	No voltage
3 – Ground	Light control switch TAIL or HEAD	Battery positive voltage
4 – Ground	Ignition switch LOCK or ACC	No voltage
4 – Ground	Ignition switch ON	Battery positive voltage
7 – Ground	Stop light switch OFF	No voltage
7 – Ground	Stop light switch ON	Battery positive voltage
8 – Ground	Ignition switch LOCK or ACC	No voltage
8 – Ground	Ignition switch ON	Battery positive voltage

*: There is resistance because this circuit is grounded through the bulb.

If the circuit is as specified, replace the relay.

If the circuit is not as specified, inspect the circuits connected to other parts.

WIPER AND WASHER SYSTEM

BE0AG–03

LOCATION

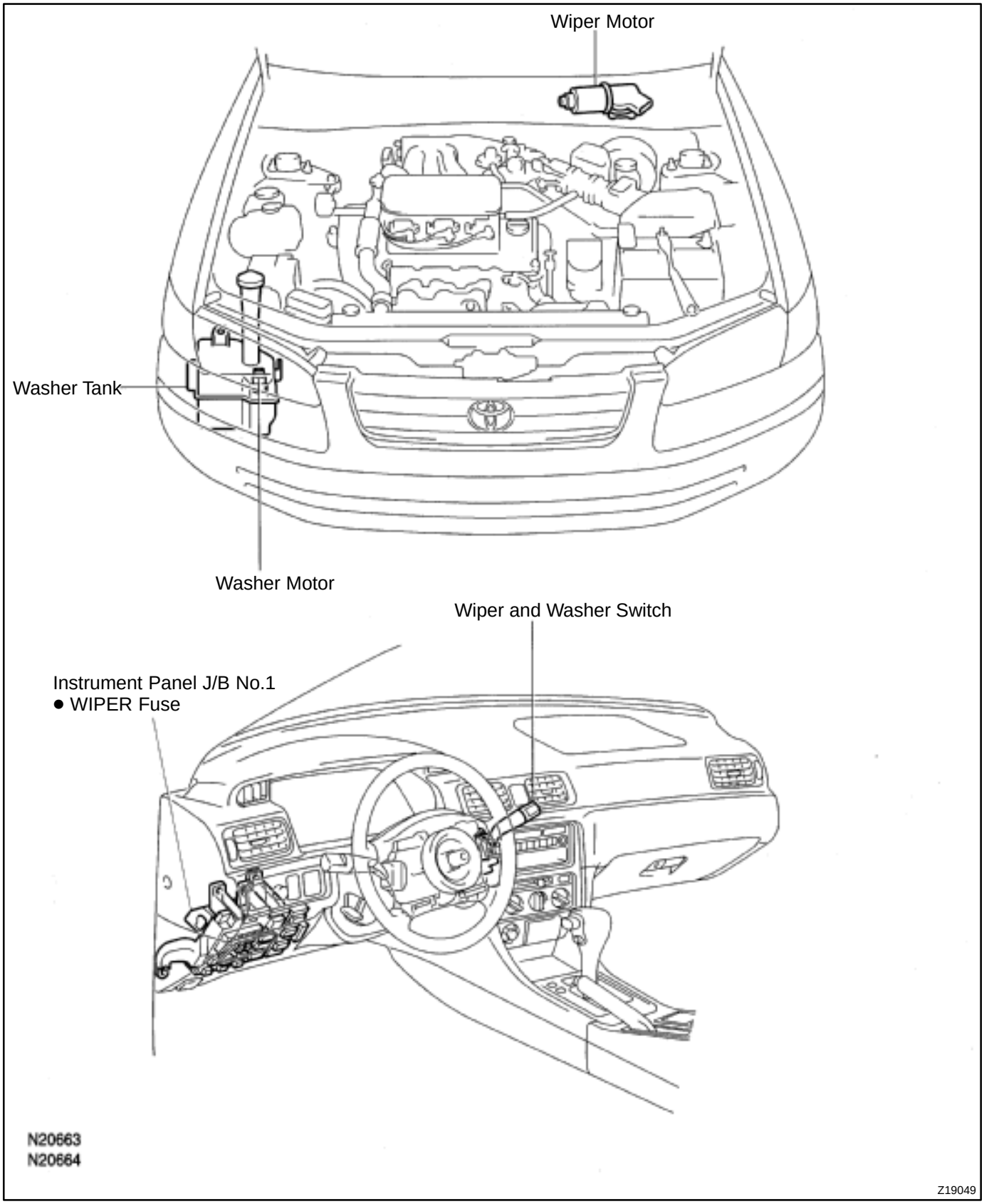

BE0AH–03

INSPECTION

1. INSPECT FRONT WIPER AND WASHER SWITCH CONTINUITY

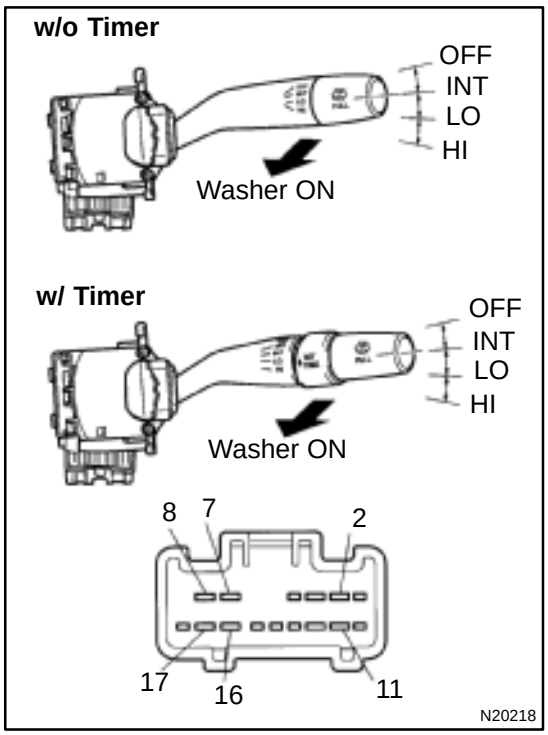

Switch position	Tester connection	Specified condition
OFF	7 – 16	Continuity
INT	7 – 16	Continuity
LO	7 – 17	Continuity
HI	8 – 17	Continuity
Washer ON	2 – 11	Continuity

If continuity is not as specified, replace the switch.

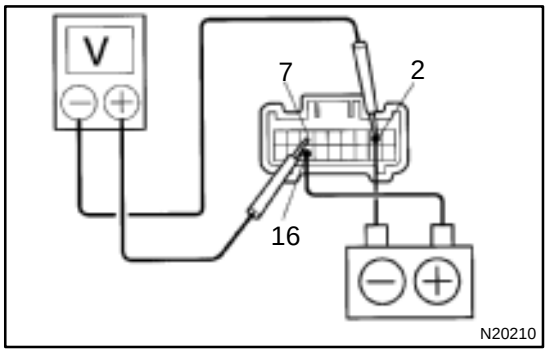

2. INSPECT INTERMITTENT OPERATION

(a) Turn the wiper switch to INT position.

(b) Turn the intermittent time control switch to FAST position.

(c) Connect the positive (+) lead from the battery to terminal 16 and the negative (–) lead to terminal 2.

(d) Connect the positive (+) lead from the voltmeter to terminal 7 and the negative (–) lead to terminal 2, check that the meter needle indicates battery positive voltage.

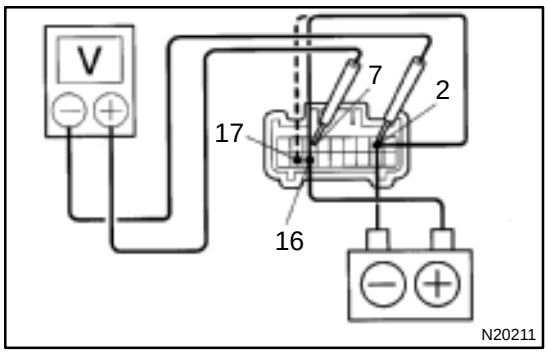

(e) After connecting terminal 16 to terminal 17, connect it to terminal 2, check the voltage rises from 0 volts to battery positive voltage within the time, as shown in the table.

INT time control switch position	Voltage
FAST	Approx. 2 sec. — Battery positive voltage — 0 V
SLOW	10.7 ± 5 sec. — Battery positive voltage — 0 V
Non variable type	3.3 ± 1 sec. — Battery positive voltage — 0 V

If operation is not as specified, replace the wiper and washer switch.

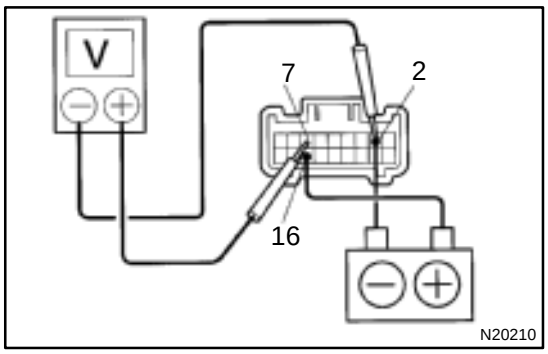

3. INSPECT WASHER LINKED OPERATION

(a) Connect the positive (+) lead from the battery to terminal 16 and the negative (–) lead to terminal 2.

(b) Connect the positive (+) lead from the voltmeter to terminal 7 and the negative (–) lead to terminal 2.

(c) Push in the washer switch, and check that the voltage changes as shown in the chart.

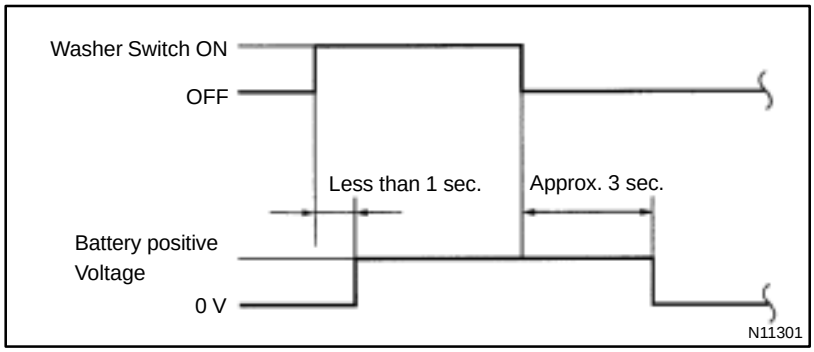

If operation is not as specified, replace the wiper and washer switch.

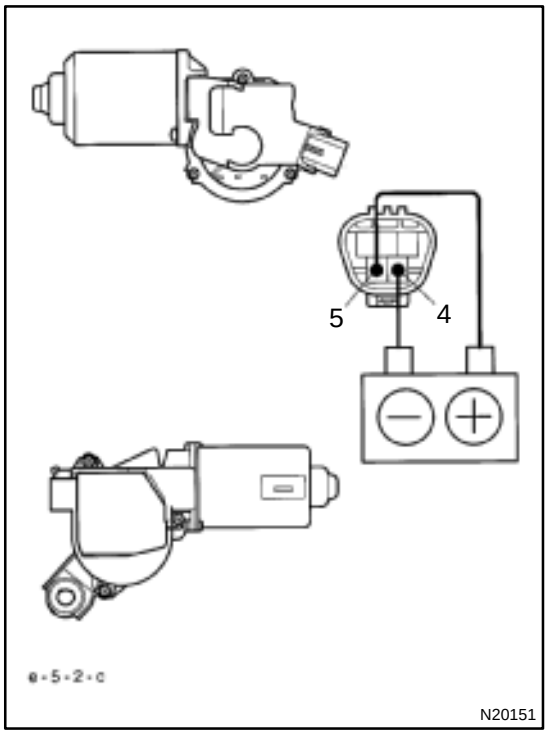

4. Low speed:
INSPECT FRONT WIPER MOTOR OPERATION

Connect the positive (+) lead from the battery to terminal 5 and the negative (–) lead to terminal 4, check that the motor operates at low speed.

If operation is not as specified, replace the motor.

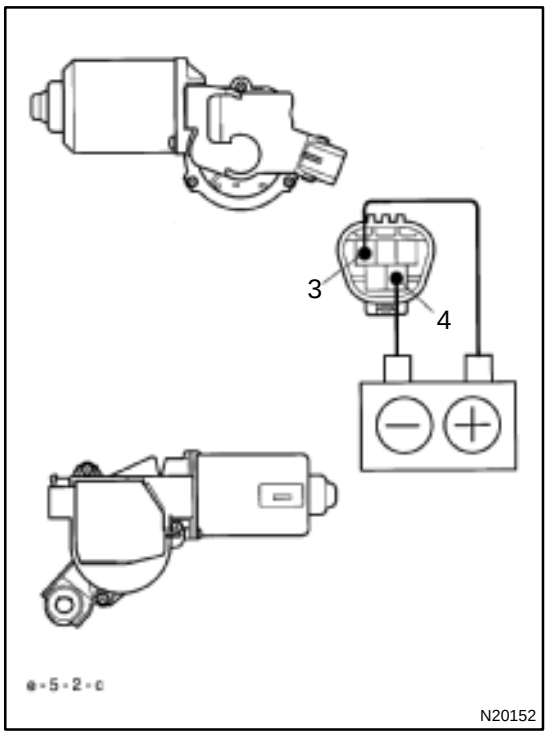

5. High speed:
INSPECT FRONT WIPER MOTOR OPERATION

Connect the positive (+) lead from the battery to terminal 3 and the negative (–) lead to terminal 4, check that the motor operates at high speed.

If operation is not as specified, replace the motor.

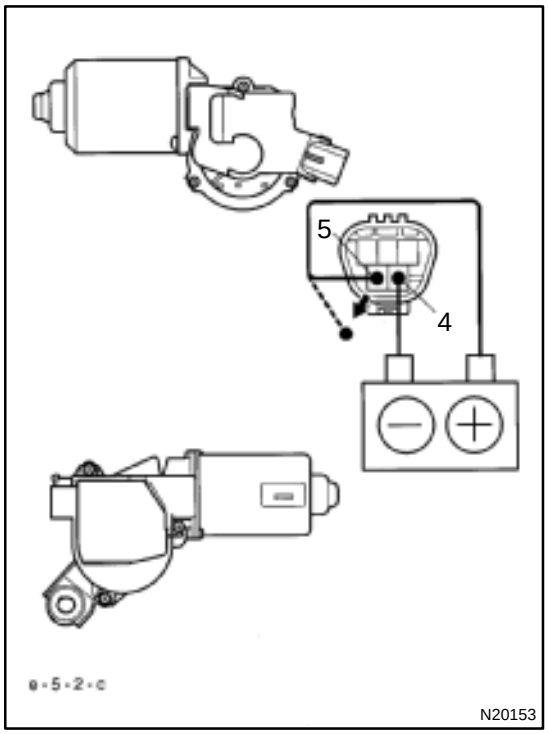

6. Stopping in stop position:
INSPECT FRONT WIPER MOTOR OPERATION

(a) Operate the motor at low speed and stop the motor operation anywhere except in the stop position by disconnecting positive (+) lead from terminal 5.

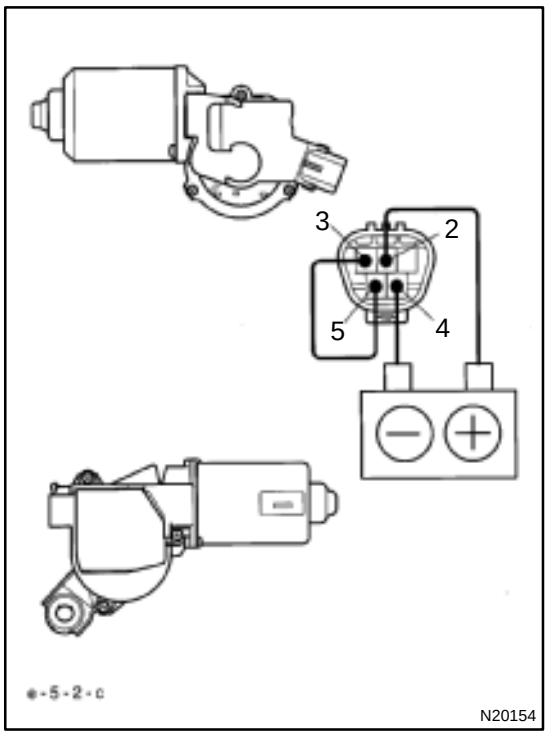

(b) Connect terminals 3 and 5.
(c) Connect the positive (+) lead from the battery to terminal 2 and negative (–) lead to terminal 4, check that the motor stops running in the stop position after the motor operates again.

If operation is not as specified, replace the motor.

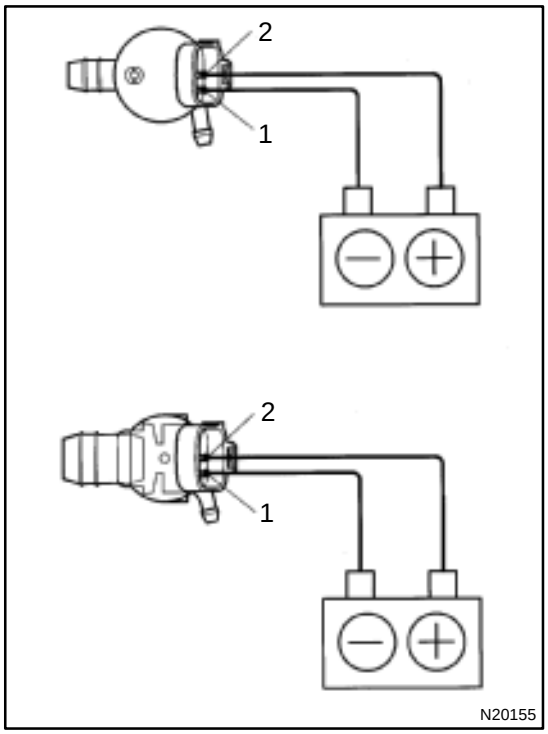

7. INSPECT WASHER MOTOR OPERATION

Connect the positive (+) lead from the battery to terminal 2 and the negative (–) lead to terminal 1, check that the motor operates.

NOTICE:

These tests must be performed quickly (within 20 seconds) to prevent the coil from burning out.

If operation is not as specified, replace the motor.

COMBINATION METER

LOCATION

BE0AI–03

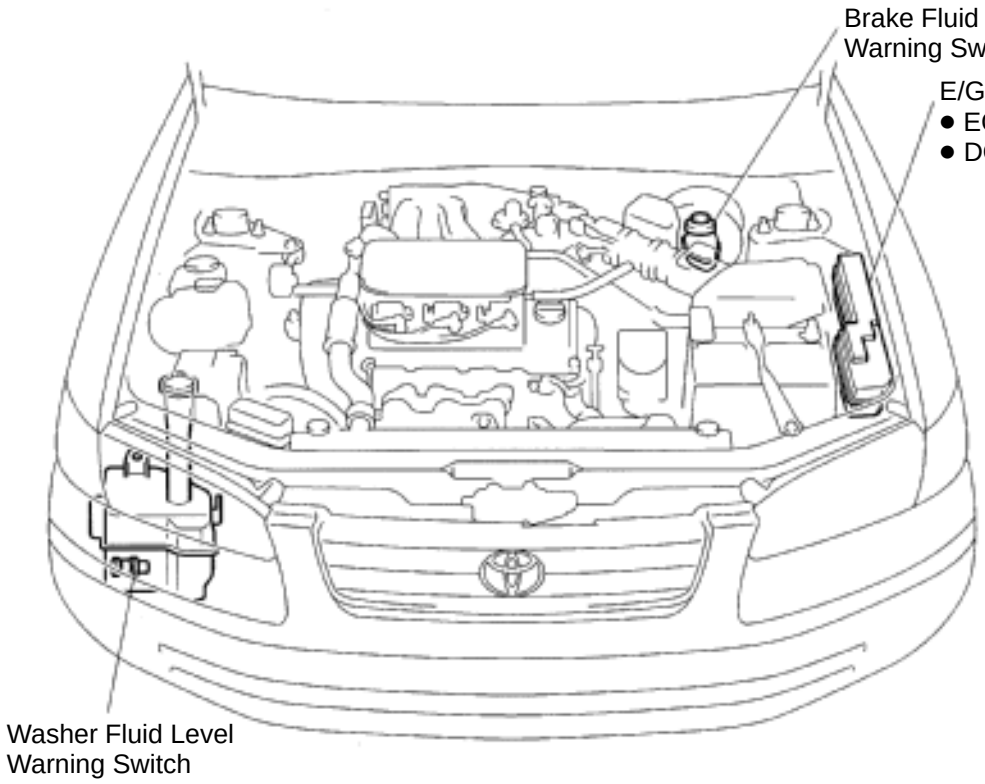

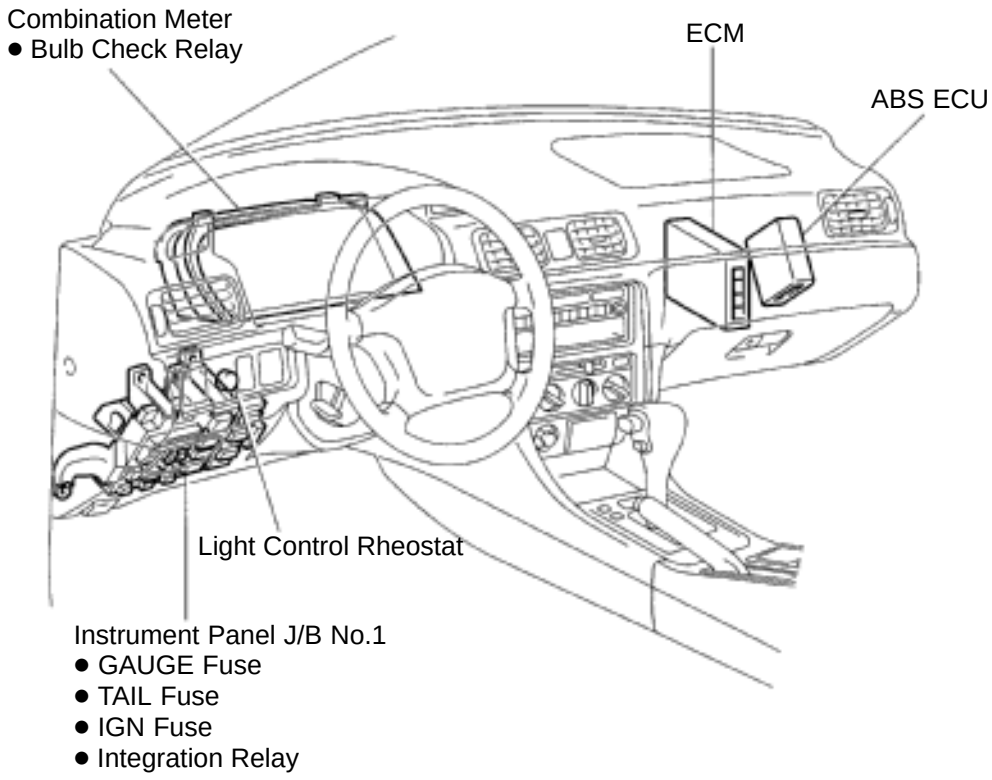

N20665
N20666

Z19050

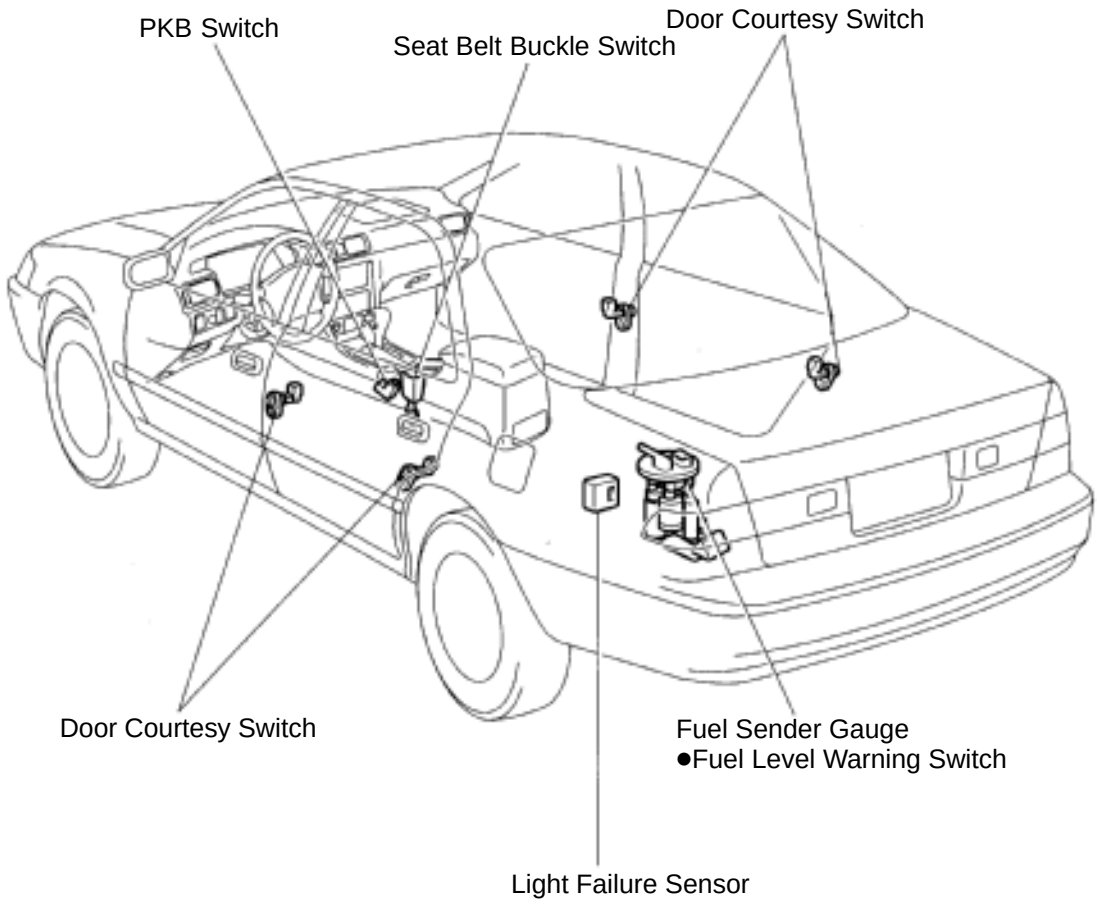

5S–FE engine:

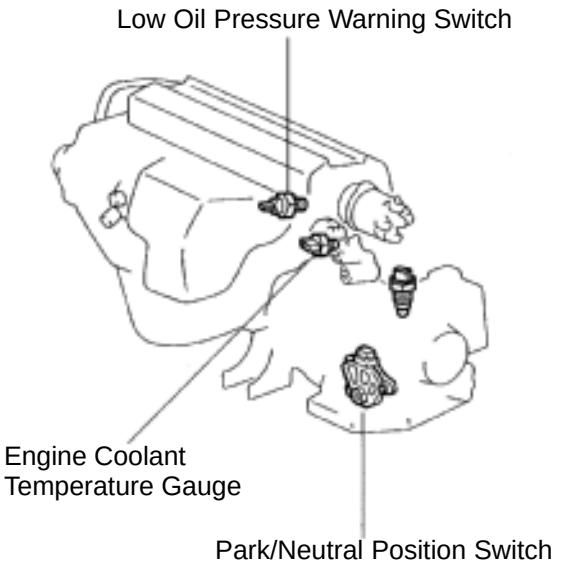

N20867
N20880

1MZ–FE engine:

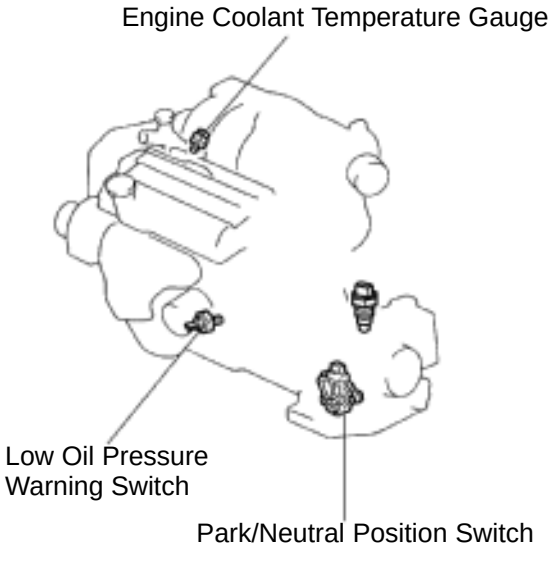

Z19055

BE0AJ–03

CIRCUIT

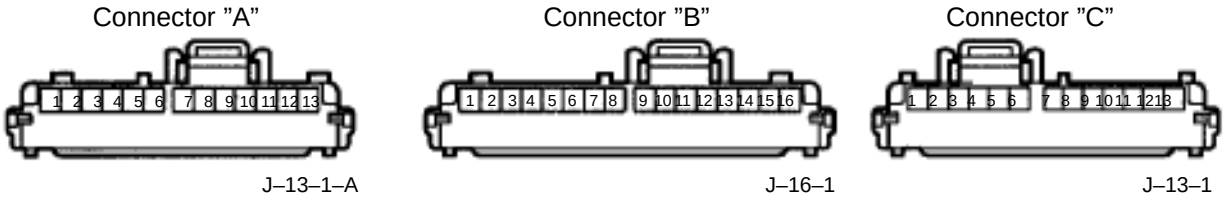

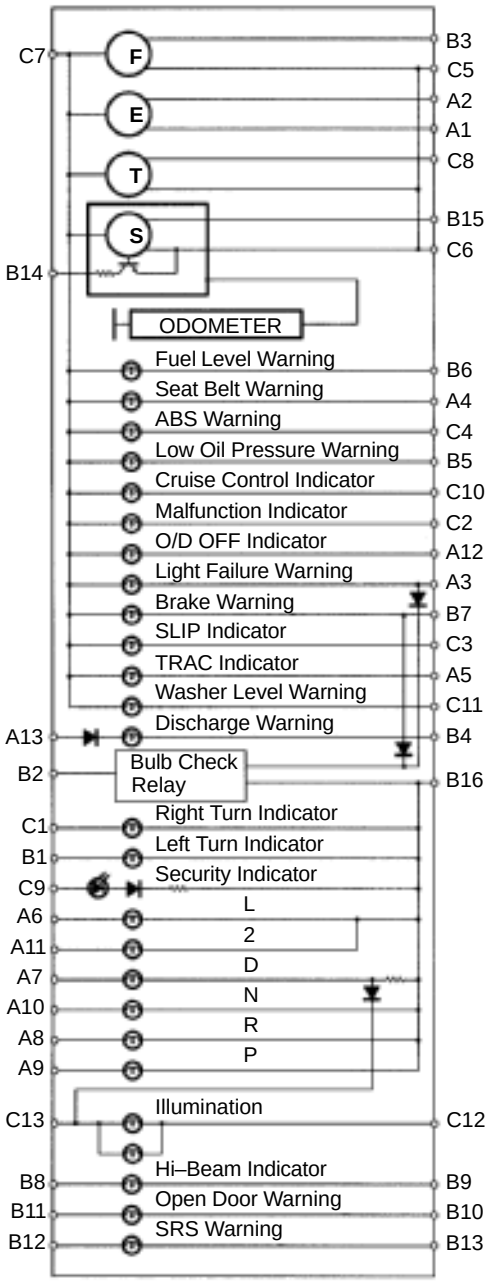

Ⓕ : Fuel Gauge
Ⓔ : Engine Coolant Temperature Gauge
Ⓣ : Tachometer
Ⓢ : Speedometer

N20107 N20108

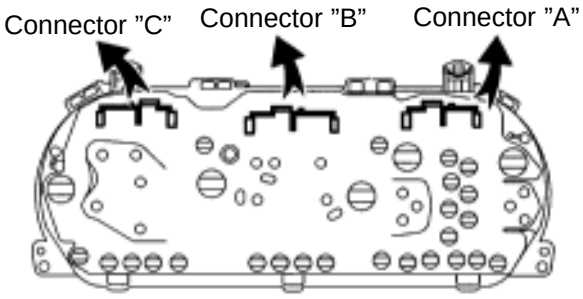

No.		Wire Harness Side
A	1	Engine coolant temperature sender gauge
	2	Ground
	3	Light failure sensor
	4	Integration relay
	5	Traction ECU
	6	Park/neutral position switch (A/T)
	7	Park/neutral position switch (A/T)
	8	Park/neutral position switch (A/T)
	9	Park/neutral position switch (A/T)
	10	Park/neutral position switch (A/T)
	11	Park/neutral position switch (A/T)
	12	O/D OFF switch (A/T)
	13	IGN fuse
B	1	Turn signal switch
	2	ST relay
	3	Fuel sender gauge
	4	Generator
	5	Oil pressure switch
	6	Fuel sender gauge
	7	Parking brake switch and brake fluid level warning switch
	8	Headlight dimmer switch
	9	Headlight dimmer switch
	10	Door courtesy switch
	11	DOME fuse
	12	ECU–B fuse
	13	Airbag sensor assembly
	14	ECM
	15	No.1 Vehicle speed sensor
	16	Ground
C	1	Turn signal switch
	2	ECM
	3	Traction ECU
	4	ABS ECU
	5	Ground
	6	No.1 Vehicle speed sensor
	7	GAUGE fuse
	8	Igniter
	9	Security ECU
	10	Cruise control ECU
	11	Washer fluid level warning switch
	12	Light control rheostat
	13	TAIL fuse

Z18937

BE0AK–03

INSPECTION

1. INSPECT SPEEDOMETER ON–VEHICLE

Using a speedometer tester, inspect the speedometer for allowable indication error and check the operation of the odometer.
HINT:
Tire wear and tire over or under inflation will increase the indication error.
If error is excessive, replace the speedometer.

USA (mph)		CANADA (km/h)	
Standard indication	Allowable range	Standard indication	Allowable range
20	18 – 24	20	17 – 24
40	38 – 44	40	38 – 46
60	56 – 66	60	57.5 – 67
80	78 – 88	80	77 – 88
100	98 – 110	100	96 – 109
120	118 – 132	120	115 – 130
		140	134 – 151.5
		160	153 – 173

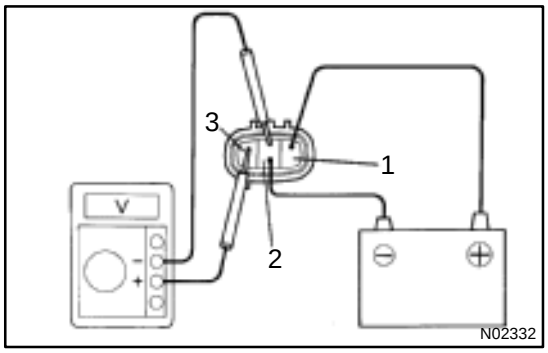

2. INSPECT VEHICLE SPEED SENSOR OPERATION

(a) Connect the positive (+) lead from the battery to terminal 1 and negative (–) lead to terminal 2.
(b) Connect the positive (+) lead from the tester to terminal 3 and the negative (–) lead to terminal 2.
(c) Rotate the shaft.
(d) Check that there is voltage change from approx. 0 V to 11 V or more between terminals 2 and 3.

HINT:
The voltage change should be performed 4 times for every revolution of the speed sensor shaft.
If operation is not as specified, replace the sensor.

3. INSPECT TACHOMETER ON–VEHICLE

(a) Connect a tune–up test tachometer, and start the engine.

NOTICE:

- **Reversing the connection of the tachometer will damage the transistors and diodes inside.**
- **When removing or installing the tachometer, be careful not to drop or subject it to heavy shocks.**

(b) Compare the tester with tachometer indications.
DC 13.5 V 25˚C at (77 ˚F)

Standard indication	Allowable range
700	630 – 770
1,000	900 – 1,100
2,000	1,850 – 2,150
3,000	2,800 – 3,200
4,000	3,800 – 4,200
5,000	4,800 – 5,200
6,000	5,750 – 6,250
7,000	6,700 – 7,300

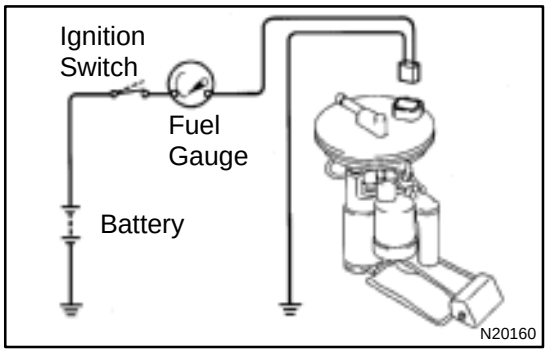

4. INSPECT FUEL RECEIVER GAUGE OPERATION

(a) Disconnect the connector from the sender gauge.

(b) Turn the ignition switch ON, check that the receiver gauge needle indicates EMPTY.

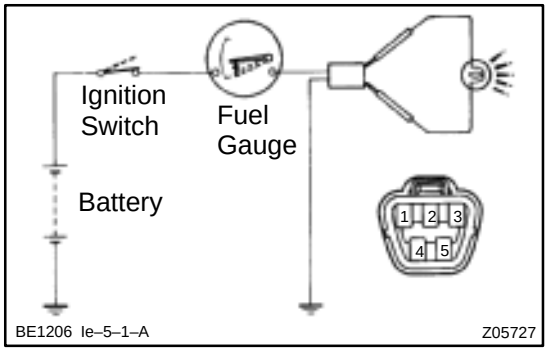

(c) Connect terminals 2 and 3 on the wire harness side connector through a 3.4–W test bulb.

(d) Turn the ignition switch ON, check that the bulb lights up and the receiver gauge needle moves towards the full side.

HINT:

Because of the silicon oil in the gauge, it will take a short time for needle to stabilize.

If operation is not as specified, inspect the receiver gauge resistance.

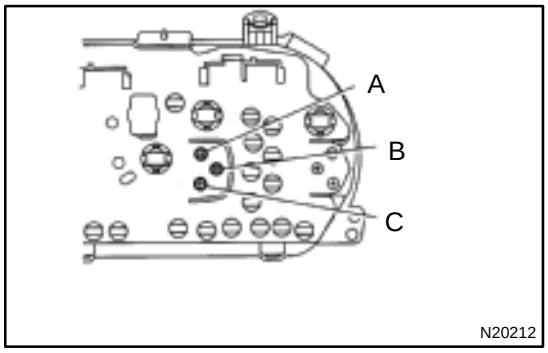

5. INSPECT FUEL RECEIVER GAUGE RESISTANCE

Measure the resistance between terminals.

Tester connection	Resistance (Ω)
A – B	Approx. 126.2
A – C	Approx. 280.5
B – C	Approx. 154.3

If resistance value is not as specified, replace the receiver gauge.

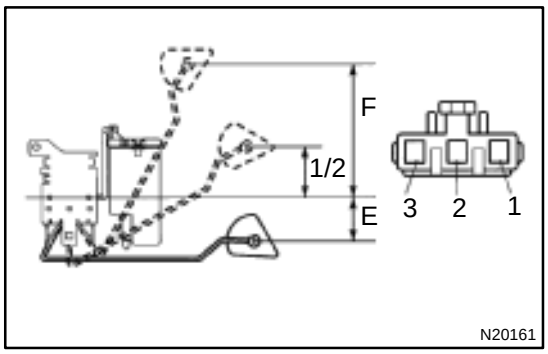

6. INSPECT FUEL SENDER GAUGE RESISTANCE

Measure the resistance between terminals 2 and 3 for each float position.

Float position mm (in.)	Resistance (Ω)
F: Approx. –91.1 (–3.587)	Approx. 3.0
1/2: Approx. –34.2 (–1.346)	Approx. 31.7
E: Approx. 30.8 (1.213)	Approx. 110.0

If resistance value is not as specified, replace the sender gauge.

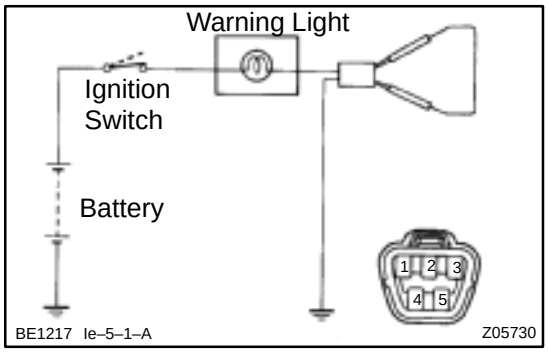

7. INSPECT FUEL LEVEL WARNING LIGHT

(a) Disconnect the connector from the sender gauge.
(b) Connect terminals 1 and 3 on the wire harness side connector.
(c) Turn the ignition switch ON, check that the warning light lights up.

If the warning light does not light up, test the bulb or inspect wire harness.

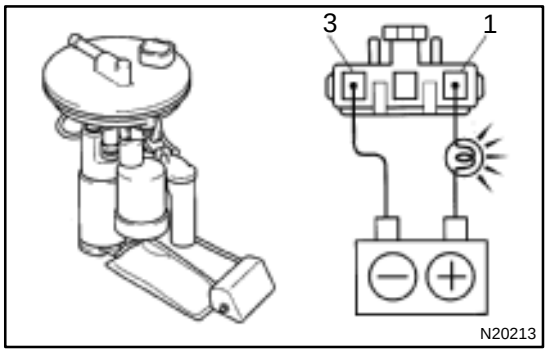

8. INSPECT FUEL LEVEL WARNING SWITCH

(a) Apply battery positive voltage between terminals 1 and 3 through a 3.4–W test bulb, check that the bulb lights up.

HINT:
It takes a short time for the bulb to light up.

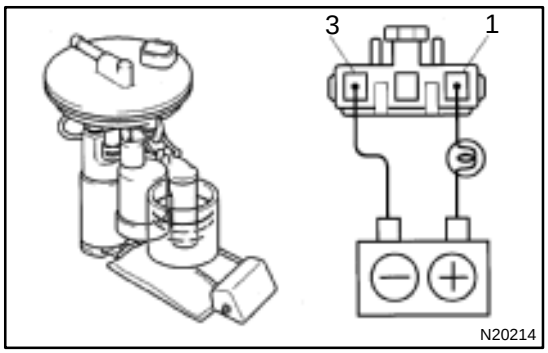

(b) Submerge the switch in fuel, check that the bulb goes out.

If operation is not as specified, replace the sender gauge.

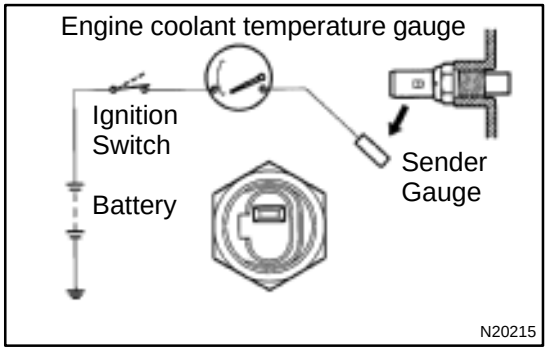

9. INSPECT ENGINE COOLANT TEMPERATURE RECEIVER GAUGE OPERATION

(a) Disconnect the connector from the sender gauge.
(b) Turn the ignition switch ON and check that the receiver gauge needle indicates COOL.

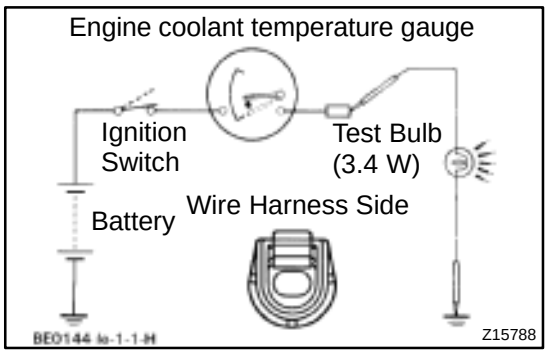

(c) Ground terminal on the wire harness side connector through a 3.4–W test bulb.
(d) Turn the ignition switch ON, and check that the bulb lights up and the receiver gauge needle moves to the hot side.

If operation is as specified, replace the sender gauge.
Then, recheck the system.
If operation is not as specified, measure the receiver gauge resistance.

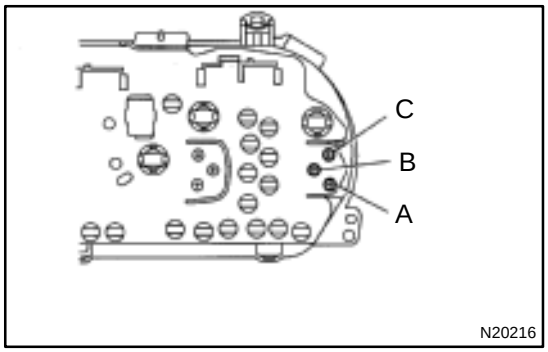

10. INSPECT ENGINE COOLANT TEMPERATURE RECEIVER GAUGE RESISTANCE

Measure the resistance between terminals.

Tester connection	Resistance (Ω) *
A – B	Approx. 175.7
A – C	Approx. 54.0
B – C	Approx. 229.7

*: This circuit includes the diode.
HINT:
Connect the test leads so that the current from the ohmmeter can flow according to the above order.
If resistance value is not as specified, replace the receiver gauge.

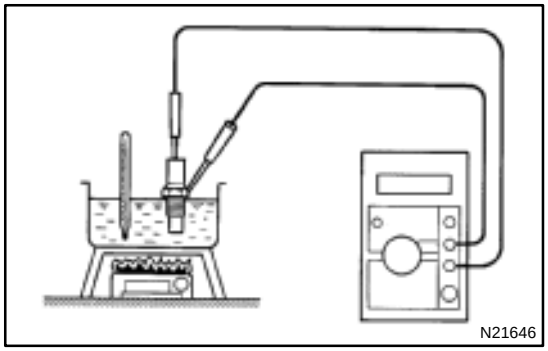

11. INSPECT ENGINE COOLANT TEMPERATURE SENDER GAUGE RESISTANCE

Measure the resistance between the terminal and gauge body.

Temperature ˚C (˚F)	Resistance (Ω)
50 (122.0)	274
120 (248.0)	26.4

If resistance value is not as specified, replace the engine coolant temperature sender gauge.

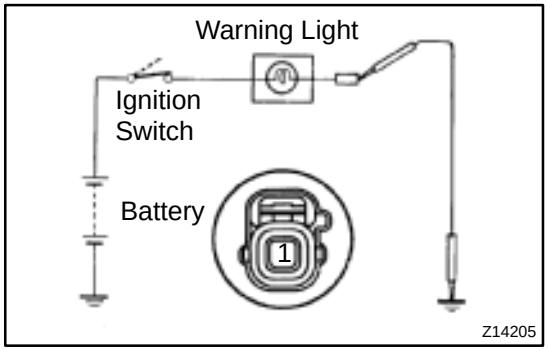

12. INSPECT LOW OIL PRESSURE WARNING LIGHT

(a) Disconnect the connector from the warning switch and ground terminal on the wire harness side connector.
(b) Turn the ignition switch ON and check that the warning light lights up.

If the warning light does not light up, test the bulb.

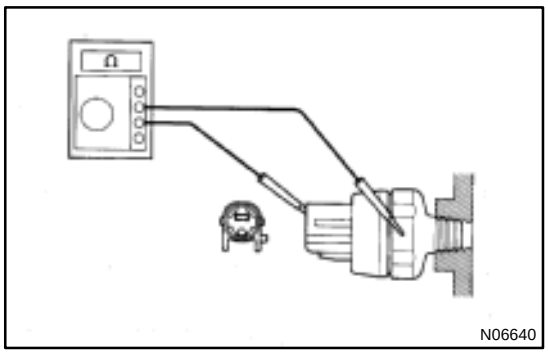

13. INSPECT LOW OIL PRESSURE SWITCH

(a) Disconnect the connector from the switch.
(b) Check that continuity exists between terminal and ground with the engine stopped.
(c) Check that no continuity exists between terminal and ground with the engine running.

HINT:
Oil pressure should be over 24.5 kPa (0.25 kgf/cm^2, 3.55 psi).
If operation is not as specified, replace the switch.

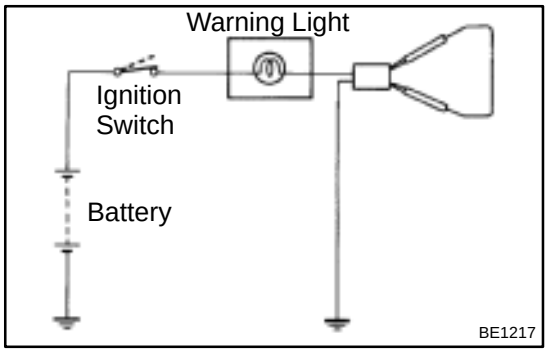

14. INSPECT BRAKE SYSTEM WARNING LIGHT

(a) Disconnect the connector from the brake fluid warning switch.
(b) Release the parking brake pedal.
(c) Connect the terminals on the wire harness side of the level warning switch connector.
(d) Start the engine, check that the warning light lights up.

If the warning light does not light up, test the bulb or wire harness.

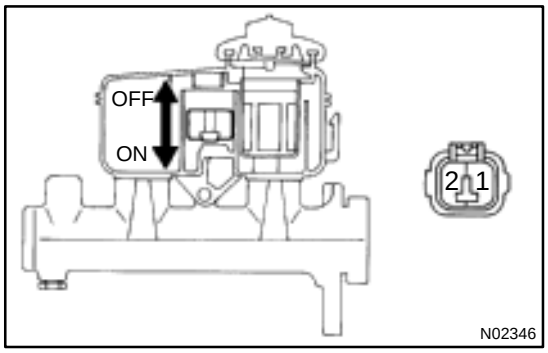

15. INSPECT BRAKE FLUID LEVEL WARNING SWITCH

(a) Remove the reservoir tank cap and strainer.
(b) Disconnect the connector.
(c) Check that no continuity exists between the terminals with the switch OFF (float up).
(d) Use syphon, etc. to take fluid out of the reservoir tank.
(e) Check that continuity exists between the terminals with the switch ON (float down).
(f) Pour the fluid back in the reservoir tank.

If operation is not as specified, replace the switch.

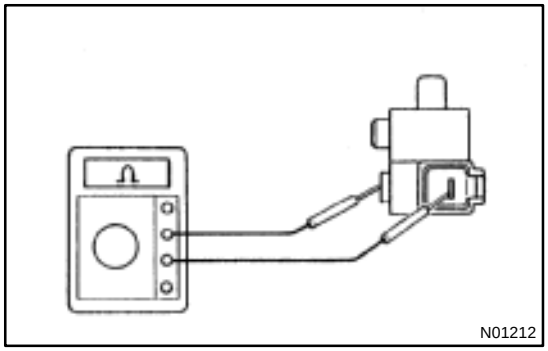

16. INSPECT PARKING BRAKE SWITCH

(a) Check that continuity exists between the terminal and switch body with the switch ON (switch pin released).
(b) Check that no continuity exists between the terminal and switch body with the switch OFF (switch pin pushed in).

If operation is not as specified, replace the switch or inspect ground point.

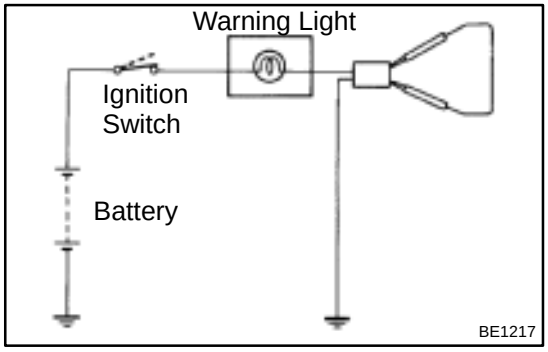

17. INSPECT WASHER FLUID LEVEL WARNING LIGHT

(a) Disconnect the connectors from the level warning switch and parking brake switch.
(b) Connect terminals on the wire harness side connector of the level warning switch connector.
(c) Remove the GAUGE fuse and turn the ignition switch ON, and check that the warning light comes on.

If the warning light does not light up, test the bulb.

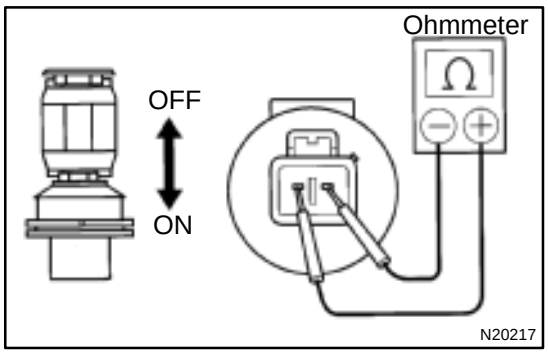

18. INSPECT WASHER FLUID LEVEL WARNING SWITCH

(a) Check that no continuity exists between terminals with the switch OFF (float up).

(b) Check that continuity exists between terminals with the switch ON (float down).

If operation is not as specified, replace the switch.

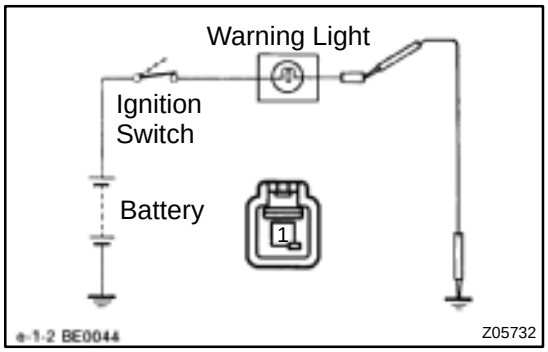

19. INSPECT OPEN DOOR WARNING LIGHT

Disconnect the connector from the door courtesy switch and ground terminal 1 on the wire harness side, and check that the warning light lights up.

If the warning light does not light up, inspect the bulb or wire harness.

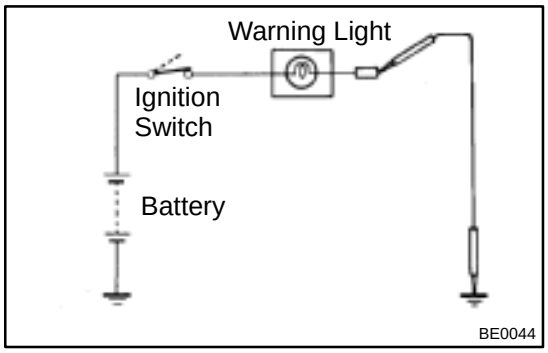

20. INSPECT SEAT BELT WARNING LIGHT

(a) Remove the integration relay from the instrument panel junction block.

(b) Ground terminal 2 on the integration relay with the connectors still connected.

(c) Turn the ignition switch ON and check that the warning light lights up.

If the warning light does not light up, inspect the bulb or wire harness.

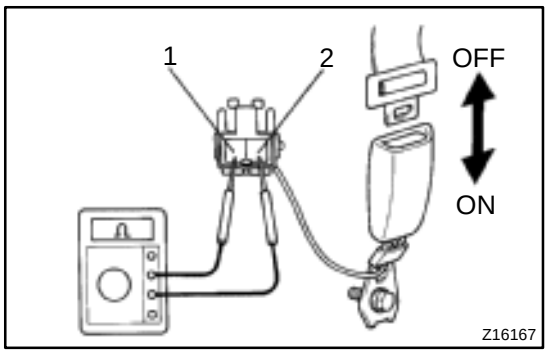

21. w/o Power seat:
INSPECT BUCKLE SWITCH CONTINUITY

(a) Check that continuity exists between the terminals on the switch side connector with the switch ON (belt fastened).

(b) Check that no continuity exists between the terminals on the switch side connector with the switch OFF (belt unfastened).

If operation is not as specified, replace the seat belt inner belt.

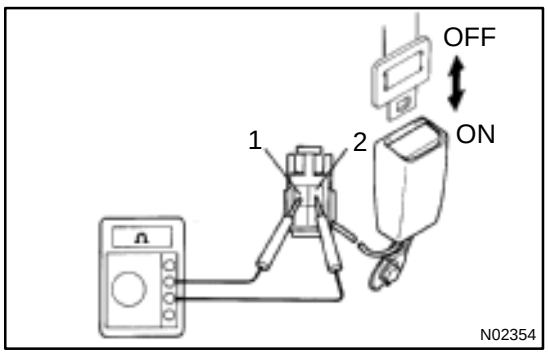

22. w/ Power seat:
INSPECT BUCKLE SWITCH CONTINUITY

(a) Check that continuity exists between terminals 1 and 2 on the switch side connector with the switch ON (belt fastened).

(b) Check that no continuity exists between terminals 1 and 2 on the switch side connector with the switch OFF (belt unfastened).

If operation is not as specified, replace the seat belt inner belt.

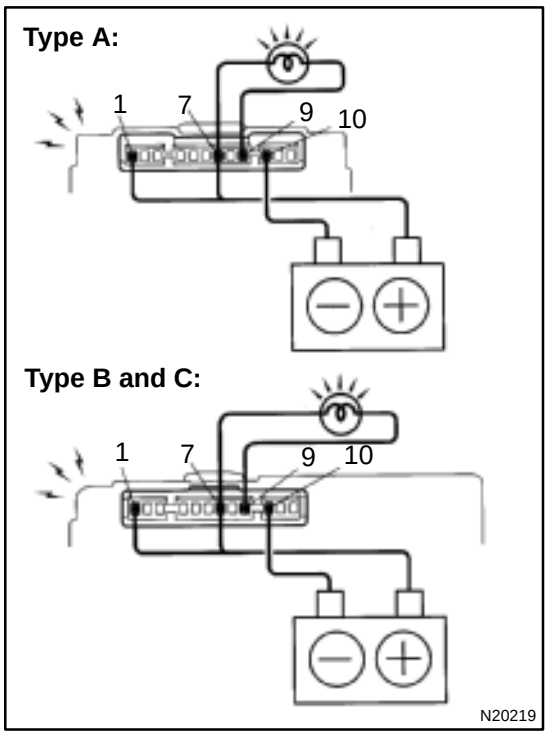

23. INSPECT INTEGRATION RELAY OF SEAT BELT WARNING SYSTEM OPERATION

(a) Connect the positive (+) lead from the battery to terminals 1 and 7.

(b) Connect the terminal 7 to terminal 9 through the 3.4–W test bulb.

(c) Connect the negative (–) lead from the battery to terminal 10.

(d) Check that the bulb lights and the buzzer sounds for 4 – 8 seconds.

(e) Return to step (a) and operate the chime again.

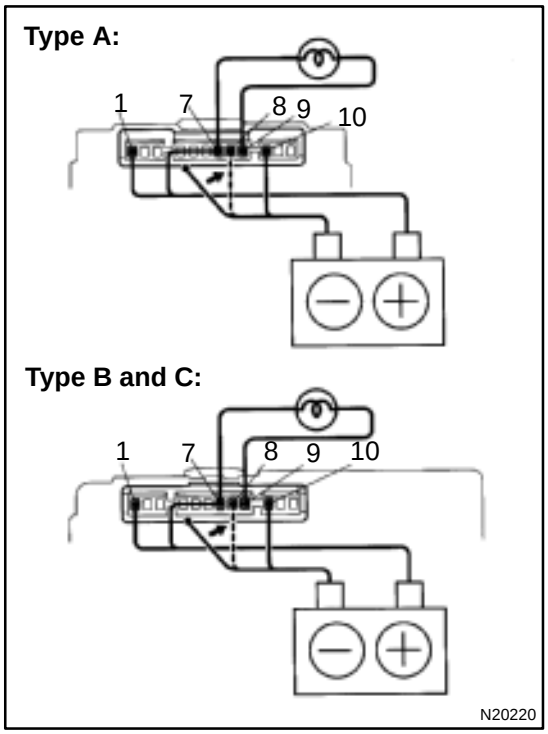

(f) Connect the negative (–) lead from the battery to terminal 8.

(g) Check that the buzzer stops sounding.

HINT:

Check the buzzer within a period of 4 to 8 seconds.

If operation is not as specified, replace the relay.

24. INSPECT INTEGRATION RELAY CIRCUIT

See page BE–14

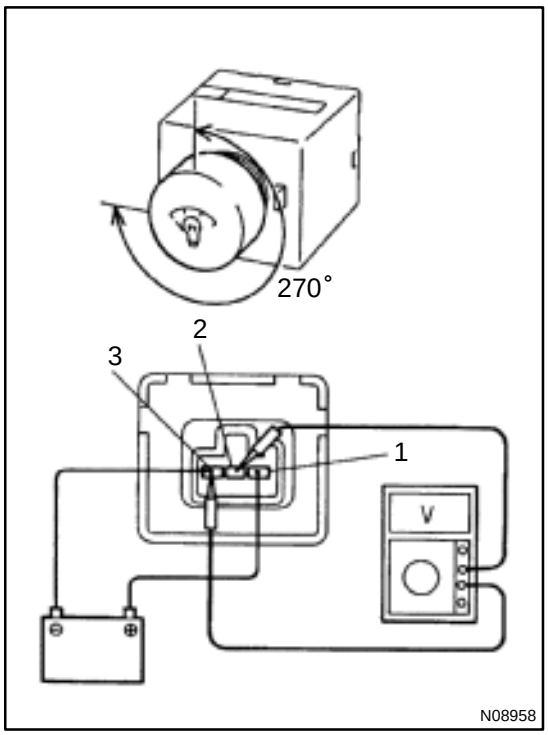

25. INSPECT LIGHT CONTROL RHEOSTAT

(a) Connect the positive (+) lead from the battery to terminal 1 and negative lead (–) to terminal 3.

(b) Connect the positive (+) lead from the voltmeter to terminal 2 and negative lead to terminal 3.

(c) Turn the rheostat knob and check that the voltage changes.

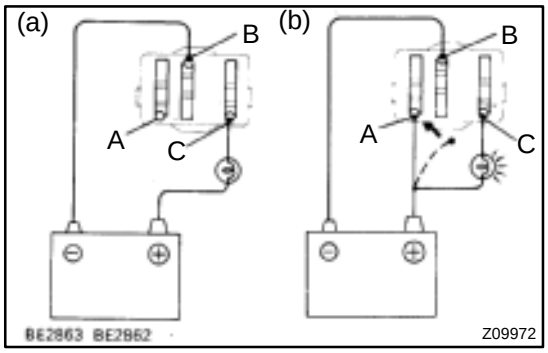

26. INSPECT BULB CHECK RELAY OPERATION

(a) Connect the positive (+) lead from the battery to terminal C through a 1.4–W test bulb and the negative (–) lead to terminal B, check that the test bulb does not light up.

(b) Connect the positive (+) lead from the battery to terminal A and check that the test bulb lights up.

If operation is not as specified, replace the relay.

DEFOGGER SYSTEM

LOCATION

BE0AL–03

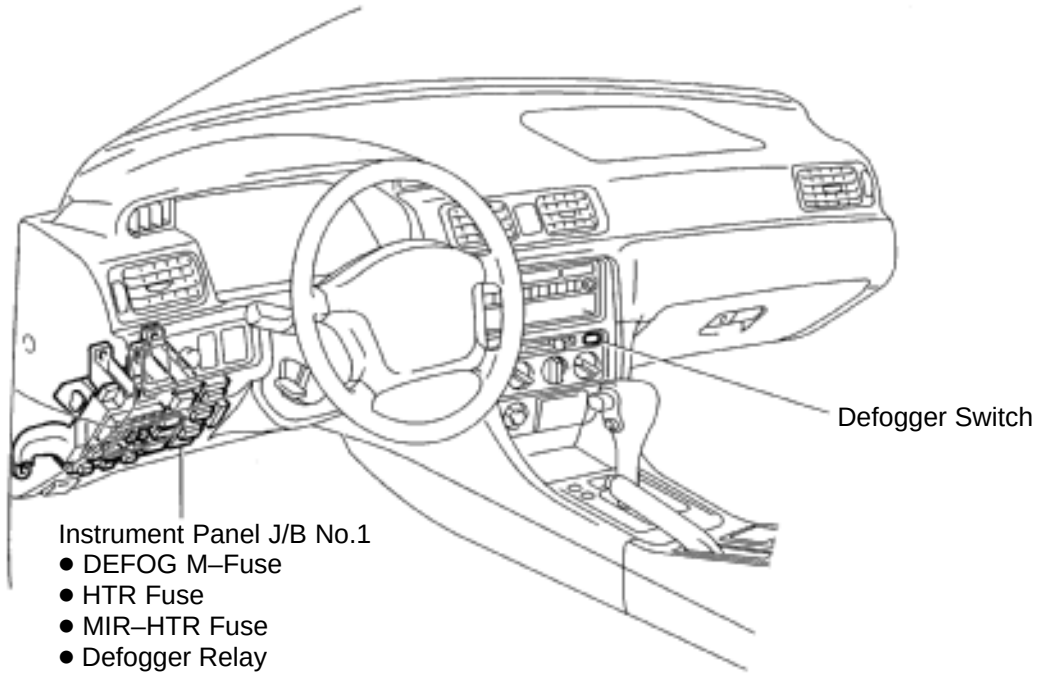

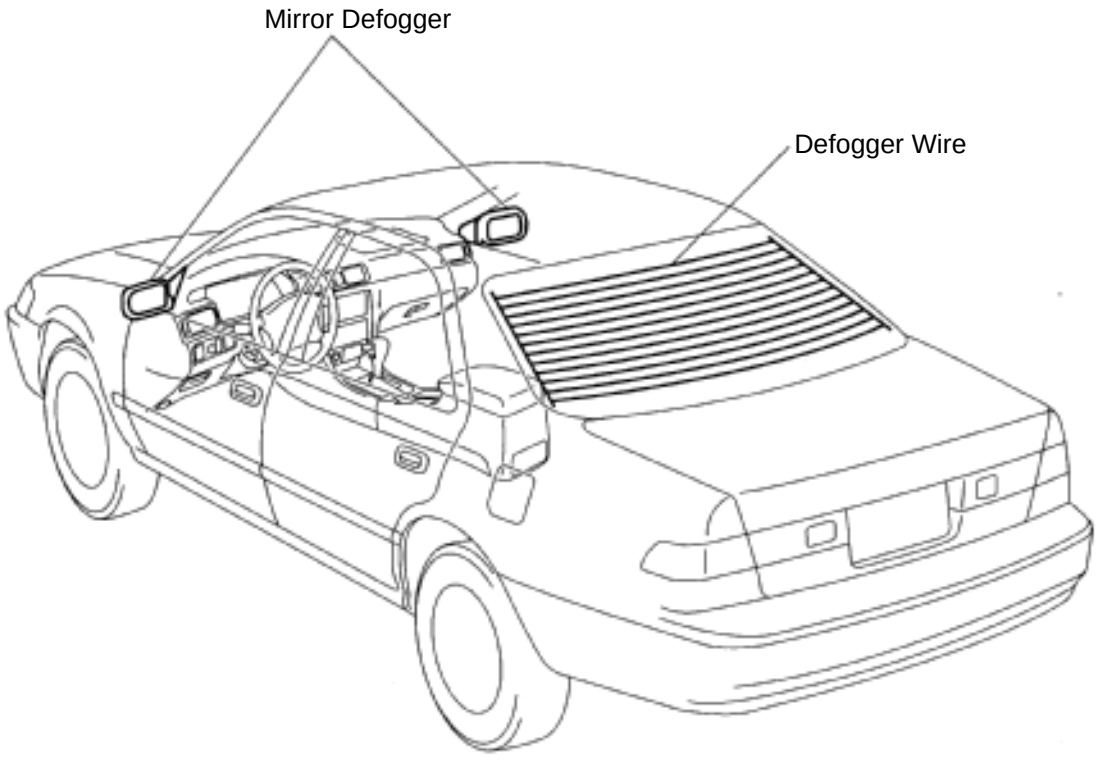

N20668
N20669

Z19051

BE0AM–03

INSPECTION

Switch side:

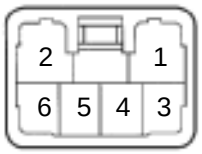

s-6-2 N20315

1. INSPECT DEFOGGER SWITCH CONTINUITY

Check that is continuity exists between terminals 2 and 6.
If continuity is not as specified, check the bulb.

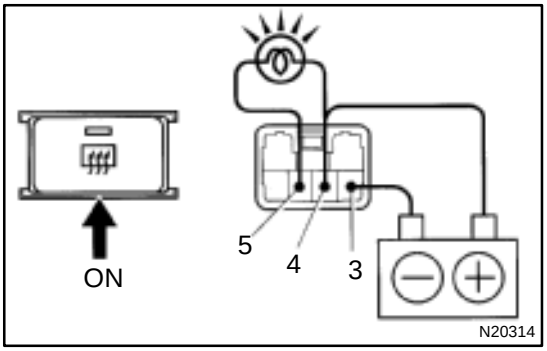

N20314

2. INSPECT DEFOGGER TIMER OPERATION

(a) Connect the positive (+) lead from the battery to terminal 4 and the negative (–) lead to terminal 3.
(b) Connect the positive (+) lead from the battery to terminal 5 through a 3.4–W tester bulb.
(c) Push the defogger switch ON, check that the indicator light and test bulb light up for 12 to 18 minutes, then the indicator light and test bulb light goes out.

If operation is not as specified, replace the switch.

Wire harness side:

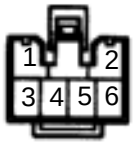

S–6–1 Z08467

3. INSPECT DEFOGGER TIMER CIRCUIT

Disconnect the connector from the switch and inspect the connector on the wire harness side, as shown in the table.

Tester connection	Condition	Specified condition
3 – Ground	Constant	Continuity
4 – Ground	Ignition switch LOCK or ACC	No voltage
4 – Ground	Ignition switch ON	Battery positive voltage
5 – Ground	Ignition switch LOCK or ACC	No voltage
5 – Ground	Ignition switch ON	Battery positive voltage
–	Connect terminals 3 and 5.	Defogger system operation is normal

If the circuit is not as specified, replace the switch.

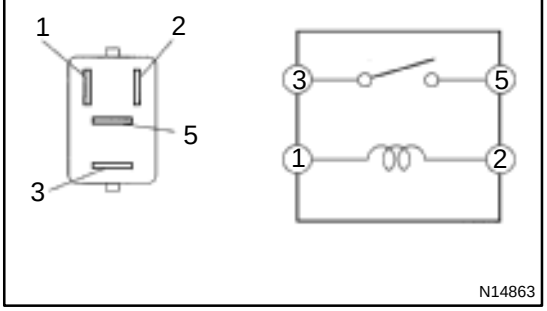

N14863

4. INSPECT DEFOGGER RELAY CONTINUITY

Condition	Tester connection	Specified condition
Constant	1 – 2	Continuity
Apply B+ between terminals 1 and 2.	3 – 5	Continuity

If continuity is not as specified, replace the relay.

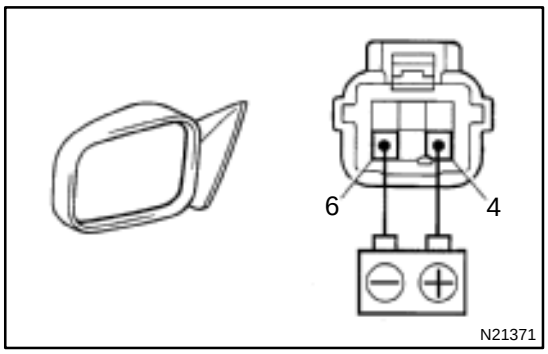

5. w/ Heater:
INSPECT MIRROR DEFOGGER

(a) Connect the positive (+) lead from the battery to terminal 4 and the negative (–) lead to terminal 6.

(b) Check that the mirror becomes warm.

HINT:

It takes short time for the mirror to become warm.

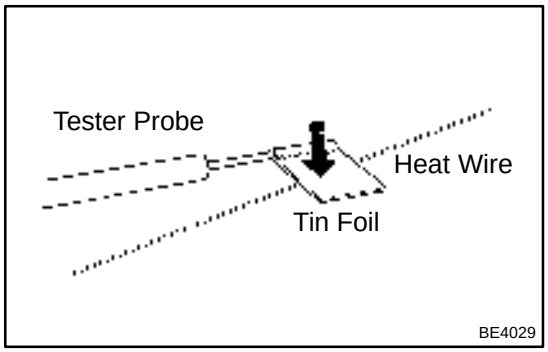

6. INSPECT DEFOGGER WIRE

NOTICE:

- **When cleaning the glass, use a soft, dry cloth, and wipe the glass in the direction of the wire. Take care not to damage the wires.**
- **Do not use detergents or glass cleaners with abrasive ingredients.**
- **When measuring voltage, wind a piece of tin foil around the top of the negative probe and press the foil against the wire with your finger, as shown.**

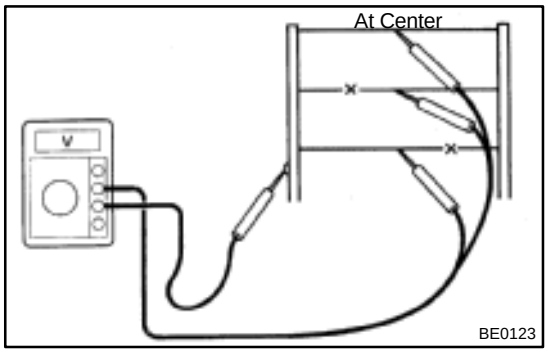

(a) Turn the ignition switch ON.

(b) Turn the defogger switch ON.

(c) Inspect the voltage at the center of each heat wire, as shown.

Voltage	Criteria
Approx. 5V	Okay (No break in wire)
Approx.10V or 0V	Broken wire

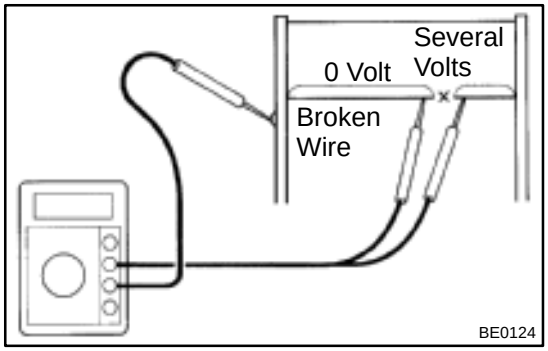

HINT:

If there is approximately 10 V, the wire is broken between the center of the wire and the positive (+) end. If there is no voltage, the wire is broken between the center of the wire and ground.

(d) Place the voltmeter positive (+) lead against the defogger positive (+) terminal.

(e) Place the voltmeter negative (–) lead with the foil strip against the heat wire at the positive (+) terminal end and slide it toward the negative (–) terminal end.

(f) The point where the voltmeter deflects from zero to several V is the place where the heat wire is broken.

HINT:

If the heat wire is not broken, the voltmeter indicates 0 V at the positive (+) end of the heat wire but gradually increases to about 12 V as the meter probe is moved to the other end.

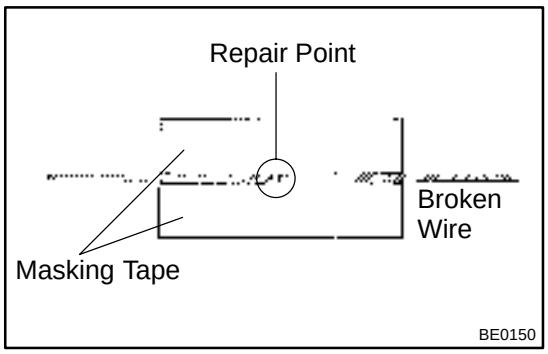

7. IF NECESSARY, REPAIR DEFOGGER WIRE

(a) Clean the broken wire tips with grease, wax and silicone remover.

(b) Place the masking tape along both sides of the wire to be repaired.

(c) Thoroughly mix the repair agent (Dupont paste No. 4817).

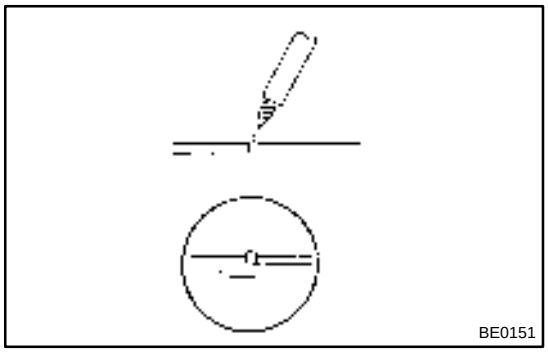

(d) Thoroughly mix the repair agent (Dupont paste No. 4817 or equivalent).

(e) Using a fine tip brush, apply a small amount to the wire.

(f) After a few minutes, remove the masking tape.

(g) Do not repair the defogger wire for at least 24 hours.

POWER WINDOW CONTROL SYSTEM

BE0AN–03

LOCATION

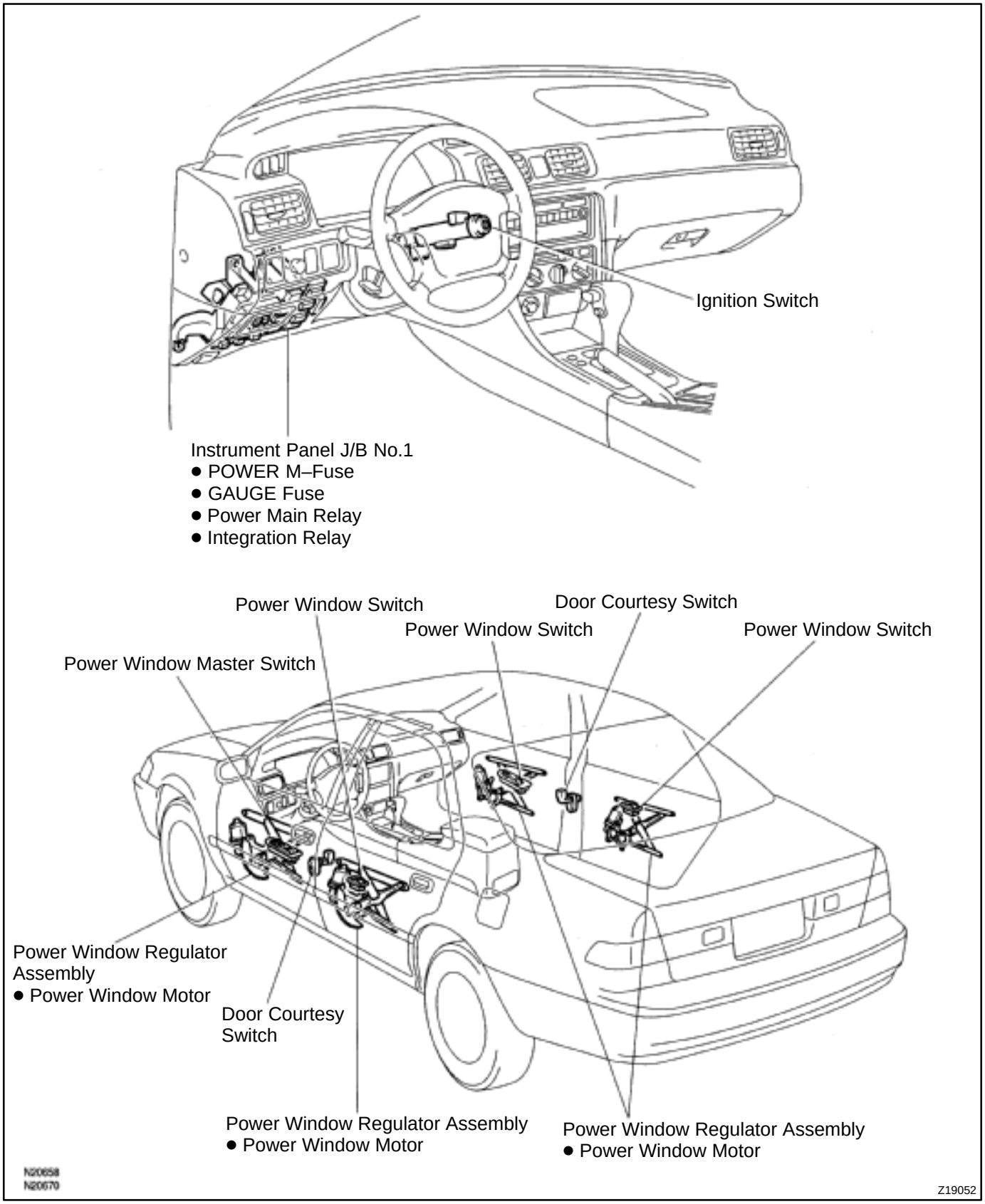

BE0AO–02

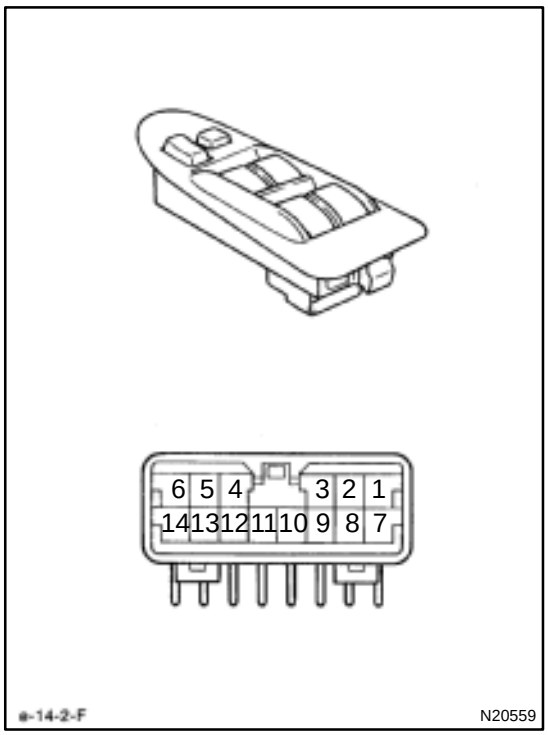

INSPECTION

1. INSPECT POWER WINDOW MASTER SWITCH CONTINUITY

(a) Inspect the front driver's switch.

Window unlock:

Switch position	Tester connection	Specified condition
UP	3 – 8 – 9 4 – 5 – 6	Continuity
OFF	3 – 4 – 5 4 – 5 – 6	Continuity
DOWN	6 – 8 – 9 3 – 4 – 5	Continuity

Window lock:

Switch position	Tester connection	Specified condition
UP	3 – 8 – 9 4 – 5 – 6	Continuity
OFF	3 – 4 – 5 4 – 5 – 6	Continuity
DOWN	6 – 8 – 9 3 – 4 – 5	Continuity

(b) Inspect the front passenger's switch.

Window unlock:

Switch position	Tester connection	Specified condition
UP	8 – 9 – 11 4 – 5 – 13	Continuity
OFF	4 – 5 – 11 4 – 5 – 13	Continuity
DOWN	8 – 9 – 13 4 – 5 – 11	Continuity

Window lock:

Switch position	Tester connection	Specified condition
UP	8 – 9 – 11	Continuity
OFF	11 – 13	Continuity
DOWN	8 – 9 – 13	Continuity

(c) Inspect the rear left switch.

Window unlock:

Switch position	Tester connection	Specified condition
UP	8 – 9 – 10 4 – 5 – 12	Continuity
OFF	4 – 5 – 10 4 – 5 – 12	Continuity
DOWN	8 – 9 – 12 4 – 5 – 10	Continuity

Window lock:

Switch position	Tester connection	Specified condition
UP	8 – 9 – 10	Continuity
OFF	10 – 12	Continuity
DOWN	8 – 9 – 12	Continuity

(d) Inspect the rear right switch.
Window unlock:

Switch position	Tester connection	Specified condition
UP	7 – 8 – 9 4 – 5 – 14	Continuity
OFF	4 – 5 – 7 4 – 5 – 14	Continuity
DOWN	8 – 9 – 14 4 – 5 – 7	Continuity

Window lock:

Switch position	Tester connection	Specified condition
UP	7 – 8 – 9	Continuity
OFF	7 – 14	Continuity
DOWN	8 – 9 – 14	Continuity

If continuity is not as specified, replace the master switch.

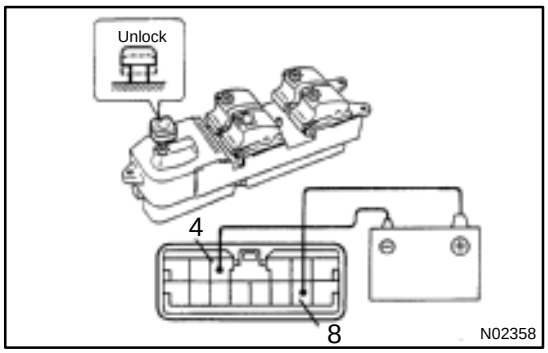

2. INSPECT POWER WINDOW MASTER SWITCH ILLUMINATION

(a) Set the window lock switch to the unlock position.
(b) Connect the positive (+) lead from the battery to terminal 8 and the negative (–) lead to terminal 4, and check that all the illuminations light up.

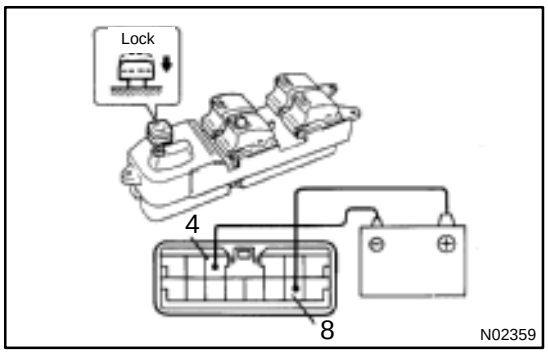

(c) Set the window lock switch to the lock position, check that all the passenger's power window switch illuminations go out.

If operation is not as specified, replace the master switch.

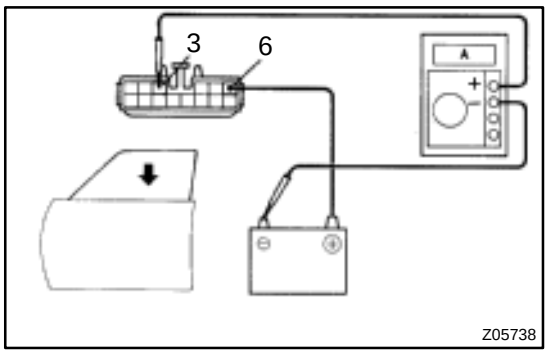

3. Using an ammeter:
INSPECT ONE–TOUCH POWER WINDOW SYSTEM/ CURRENT OF CIRCUIT

(a) Disconnect the connector from the master switch.
(b) Connect the positive (+) lead from the ammeter to terminal 3 on the wire harness side connector and the negative (–) lead to negative terminal of the battery.
(c) Connect the positive (+) lead from the battery to terminal 6 on the wire harness side connector.
(d) As the window goes down, check that the current flow is approximately 7 A.

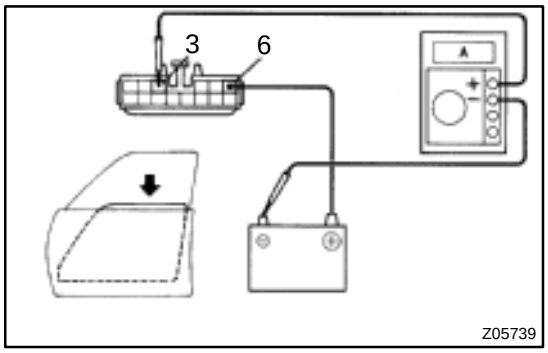

(e) Check that the current increases up to approximately 14.5 A or more when the window stops going down.

HINT:
The circuit breaker opens some 4 – 40 seconds after the window stops going down, so that check must be done before the circuit breaker operates.
If the operation is as specified, replace the master switch.

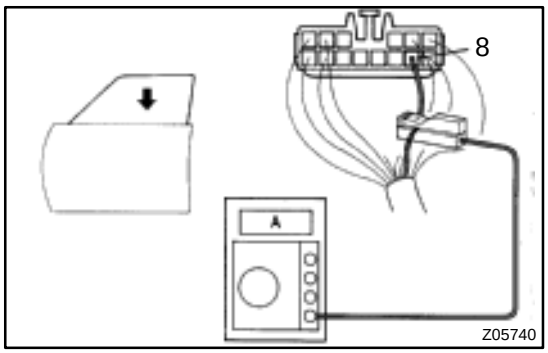

4. Using an ammeter with a current – measuring probe:
INSPECT ONE–TOUCH POWER WINDOW SYSTEM/ CURRENT OF CIRCUIT

(a) Remove the master switch with connector connected.
(b) Attach a current–measuring probe to terminal 8 of the wire harness.
(c) Turn the ignition switch ON and set the power window switch in the down position.
(d) As the window goes down, check that the current flow is approximately 7 A.

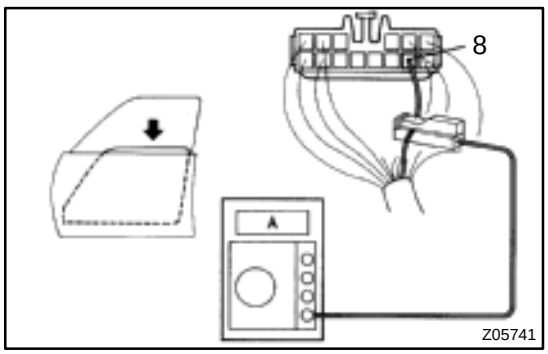

(e) Check that the current increases up to approximately 14.5 A or more when the window stops going down.

HINT:
The circuit breaker opens some 4 – 40 seconds after the window stops going down, so that check must be done before the circuit breaker operates.
If operation is as specified, replace the master switch.

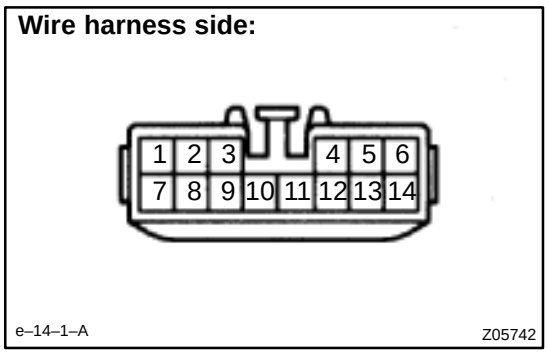

5. INSPECT POWER WINDOW MASTER SWITCH CIRCUIT

Disconnect the connector from the master switch and inspect the connector on the wire harness side, as shown in the following page.

Tester connection	Condition	Specified condition
4 – Ground	Constant	Continuity
8 – Ground	Ignition switch position LOCK or ACC	*No voltage
8 – Ground	Ignition switch position ON	Battery positive voltage

*Exceptions: During 60 seconds after the ignition switch is turned ON to OFF (ACC) or until driver or a passenger's door is opened after the ignition switch is turned ON to OFF (ACC). If the circuit is not as specified, inspect the circuits connected to other parts.

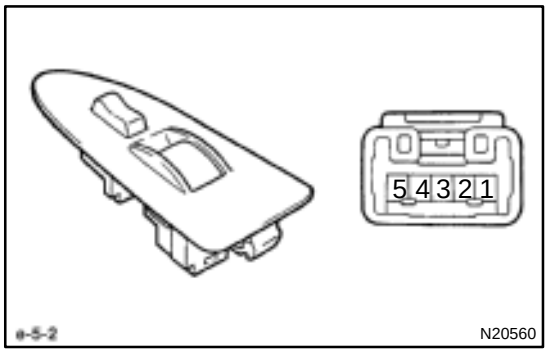

6. Front passenger's door: INSPECT POWER WINDOW SWITCH CONTINUITY

Switch position	Tester connection	Specified condition
UP	1 – 2, 3 – 4	Continuity
OFF	1 – 2, 3 – 5	Continuity
DOWN	1 – 4, 3 – 5	Continuity

If continuity is not as specified, replace the switch.

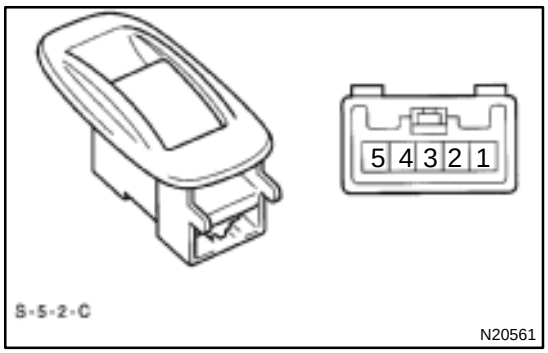

7. Rear door: INSPECT POWER WINDOW SWITCH CONTINUITY

Switch position	Tester connection	Specified condition
UP	1 – 3, 4 – 5	Continuity
OFF	1 – 2, 4 – 5	Continuity
DOWN	1 – 2, 3 – 5	Continuity

If continuity is not as specified, replace the switch.

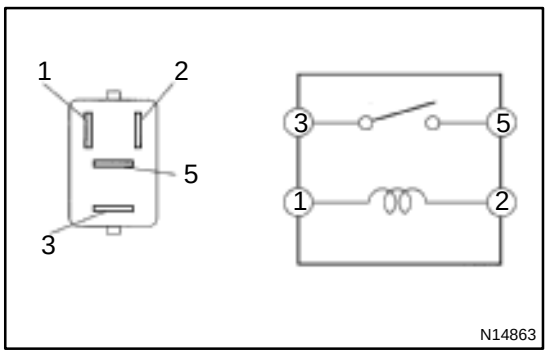

8. INSPECT POWER MAIN RELAY CONTINUITY

Condition	Tester connection	Specified condition
Constant	1 – 2	Continuity
Apply B+ between terminals 1 and 2.	3 – 5	Continuity

If continuity is not as specified, replace the relay.

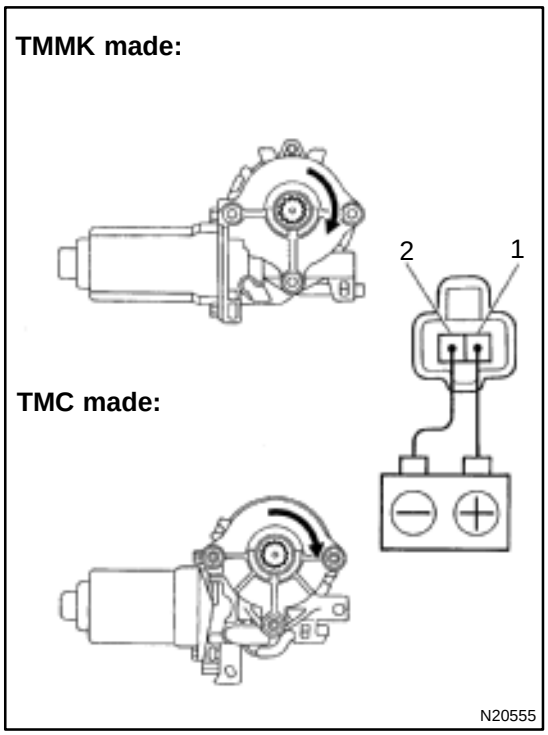

9. Left side door:
INSPECT MOTOR OPERATION

(a) Connect the positive (+) lead from the battery to terminal 1 and the negative (–) lead to terminal 2, and check that the motor turns clockwise.

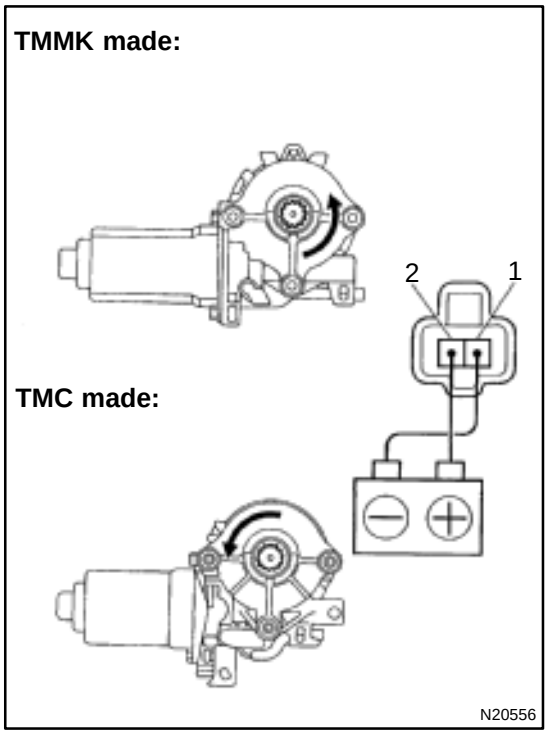

(b) Reverse the polarity, and check that the motor turns counterclockwise.

If operation is not as specified, replace the motor.

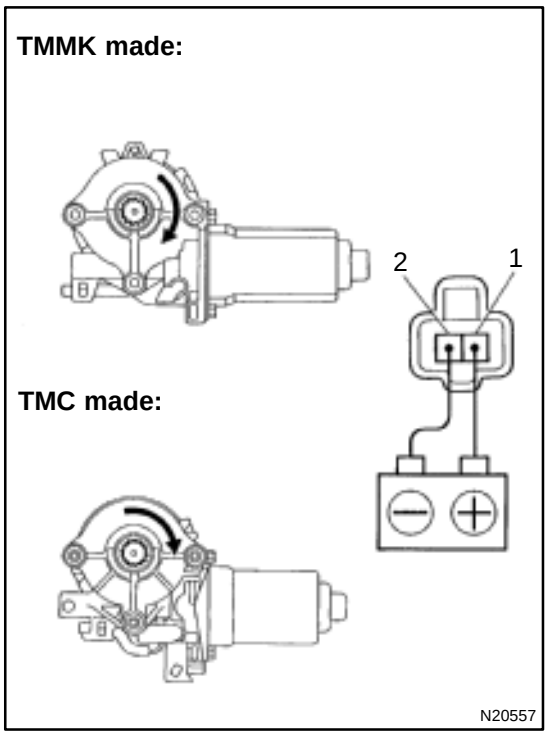

10. Right side door:
INSPECT MOTOR OPERATION

(a) Connect the positive (+) lead from the battery to terminal 1 and the negative (–) lead to terminal 2, and check that the motor turns clockwise.

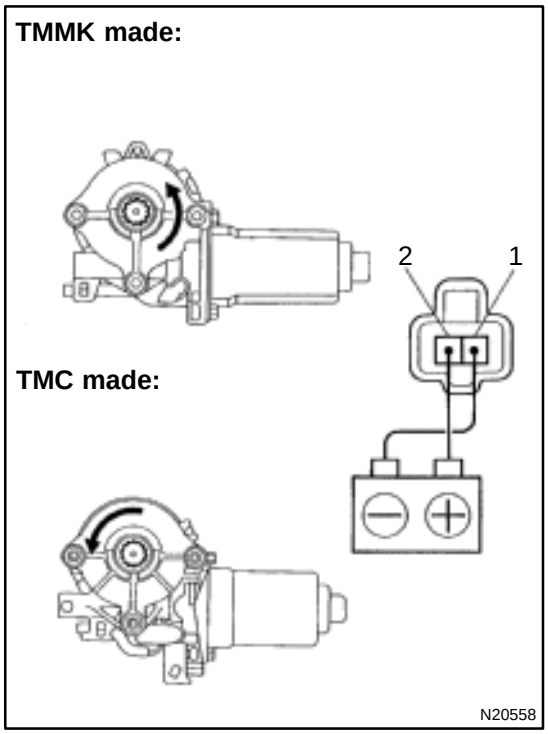

(b) Reverse the polarity, and check that the motor turns counterclockwise.

If operation is not as specified, replace the motor.

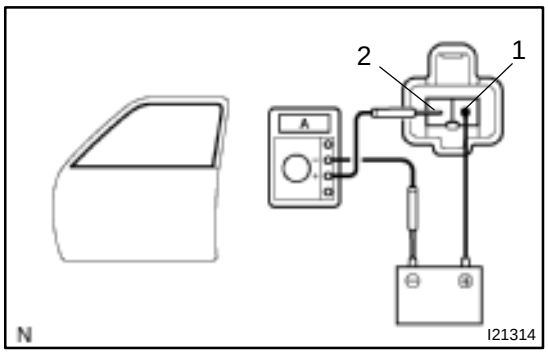

11. Driver's door:
INSPECT POWER WINDOW MOTOR PTC THERMISTOR OPERATION

(a) Disconnect the connector from the master switch.
(b) Connect the positive (+) lead from the ammeter to terminal 2 on the wire harness side connector and the negative (–) lead to negative terminal of the battery.
(c) Connect the positive (+) lead from the battery to terminal 1 on the wire harness side connector, and raise the window to the fully position.
(d) Continue to apply voltage and check that the current changes to less than 1 A within 4 to 90 seconds.
(e) Disconnect the leads from the terminals.

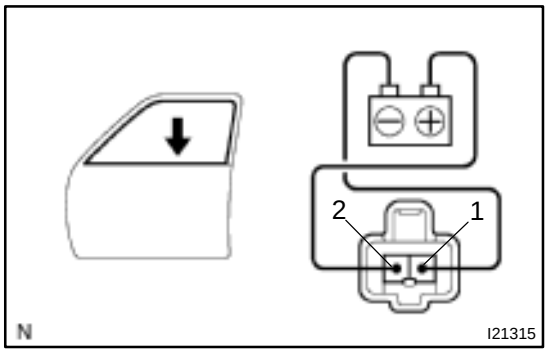

(f) Approximately 60 seconds later, connect the positive (+) lead from the battery to terminal 2 and the negative (–) lead to terminal 1, and check that the window begins to descend.

If operation is not as specified, replace the motor.

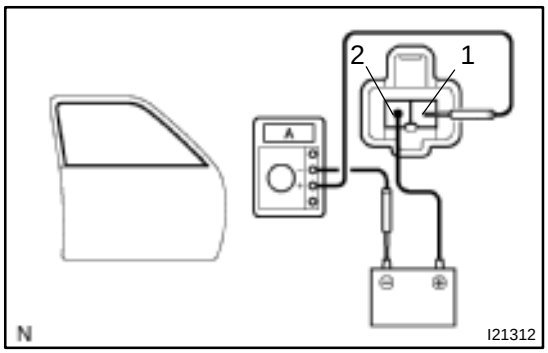

12. Passenger's door:
INSPECT POWER WINDOW MOTOR PTC THERMISTOR OPERATION

(a) Disconnect the connector from the power window switch.
(b) Connect the positive (+) lead from the ammeter to terminal 1 on the wire harness side connector and the negative (–) lead to negative terminal of the battery.
(c) Connect the positive (+) lead from the battery to terminal 2 on the wire harness side connector, and raise the window to the fully position.
(d) Continue to apply voltage and check that the current changes to less than 1 A within 4 to 90 seconds.
(e) Disconnect the leads from the terminals.

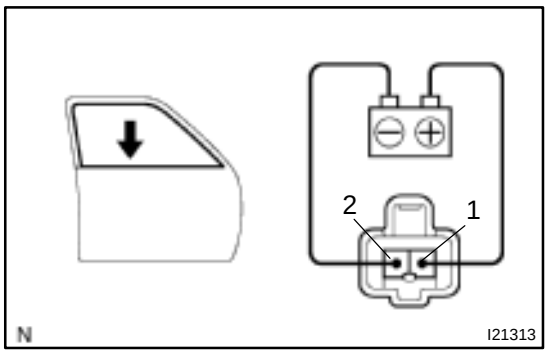

(f) Approximately 60 seconds later, connect the positive (+) lead from the battery to terminal 1 and the negative (–) lead to terminal 2, and check that the window begins to descend.

If operation is not as specified, replace the motor.

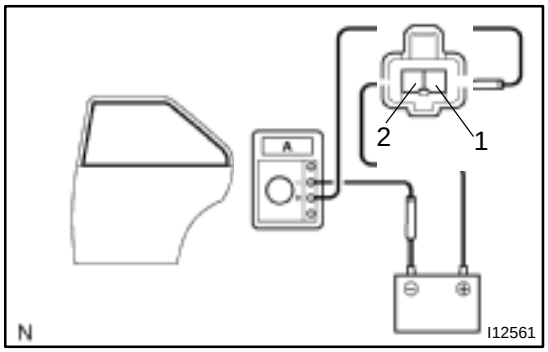

13. Rear Door:
INSPECT POWER WINDOW MOTOR PTC THERMISTOR OPERATION

(a) Disconnect the connector from the power window switch.
(b) Connect the positive (+) lead from the ammeter to terminal 1 on the wire harness side connector and the negative (–) lead to negative terminal of the battery.
(c) Connect the positive (+) lead from the battery to terminal 2 on the wire harness side connector, and raise the window to the fully position.
(d) Continue to apply voltage and check that the current changes to less than 1 A within 4 to 90 seconds.
(e) Disconnect the leads from the terminals.
(f) Approximately 60 seconds later, connect the positive (+) lead from the battery to terminal 2 and the negative (–) lead to terminal 1, and check that the window begins to descend.

If operation is not as specified, replace the motor.

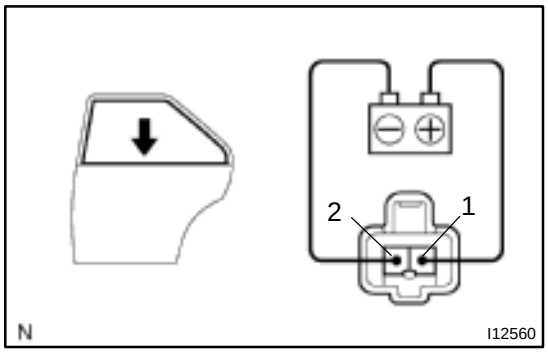

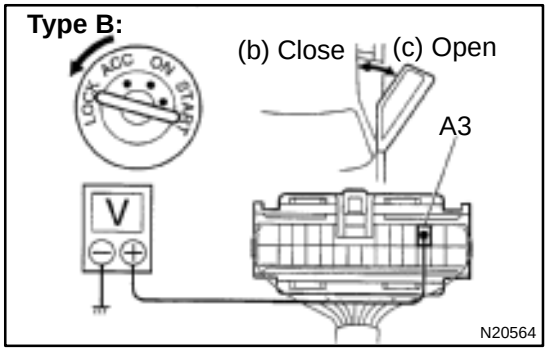

14. Key–off power window signal:
INSPECT INTEGRATION RELAY (TYPE B) OPERATION

HINT:
When the relay circuit is as specified, inspect the key–off power window signal.

(a) Connect the positive (+) lead from the voltmeter to terminal A3 and the negative (–) lead to body ground.
(b) Close the door with ignition switch turned to LOCK or ACC, and check that the meter needle indicates battery positive voltage.
(c) Open the door and check that the meter needle indicates 0 V.

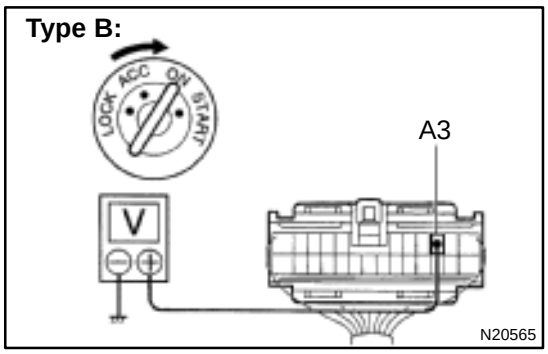

(d) Turn the ignition switch ON and check that the meter needle indicates battery positive voltage again.

If operation is not as specified, replace the relay.

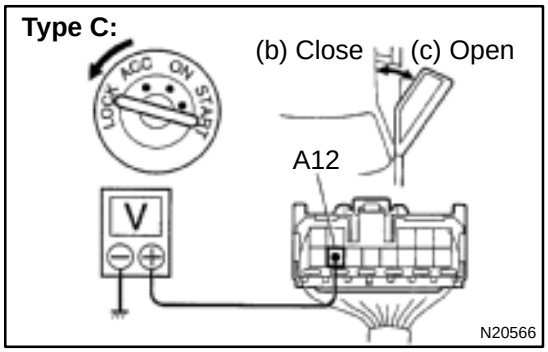

15. Key–off power window signal:
INSPECT INTEGRATION RELAY (TYPE C) OPERATION

HINT:

When the relay circuit is as specified, inspect the key–off power window signal.

(a) Connect the positive (+) lead from the voltmeter to terminal A12 and the negative (–) lead to body ground.

(b) Close the door with ignition switch turned to LOCK or ACC, and check that the meter needle indicates battery positive voltage.

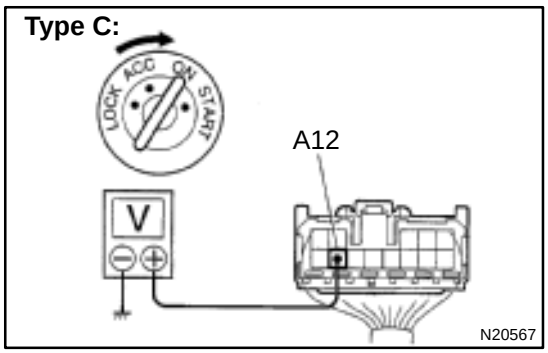

(c) Open the door and check that the meter needle indicates 0 V.

(d) Turn the ignition switch ON and check that the meter needle indicates battery positive voltage again.

If operation is not as specified, replace the relay.

16. INSPECT INTEGRATION RELAY CIRCUIT
(See page XX–XXX)

POWER DOOR LOCK CONTROL SYSTEM

BE0AP–02

LOCATION

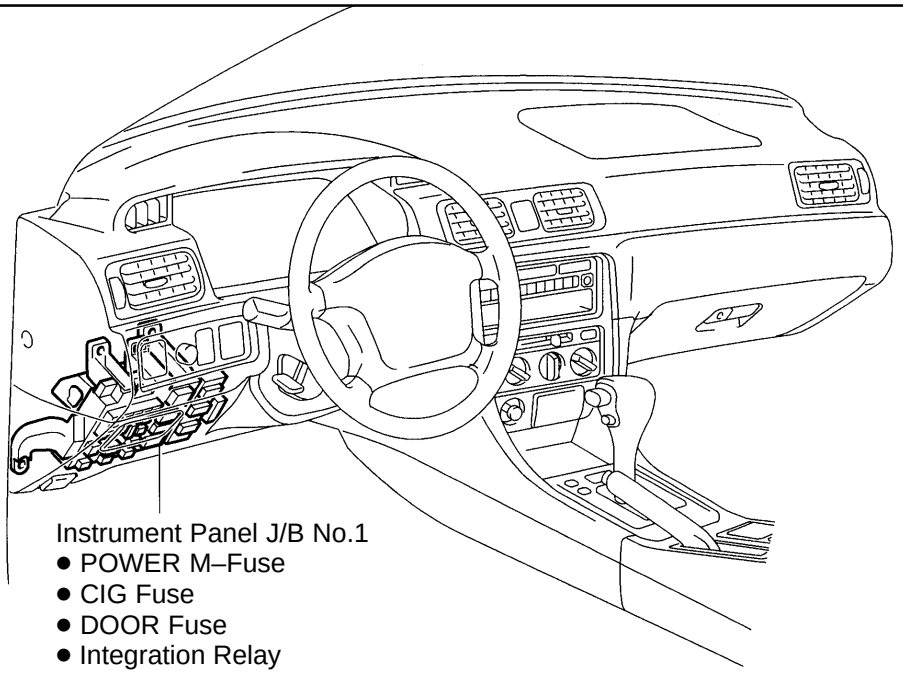

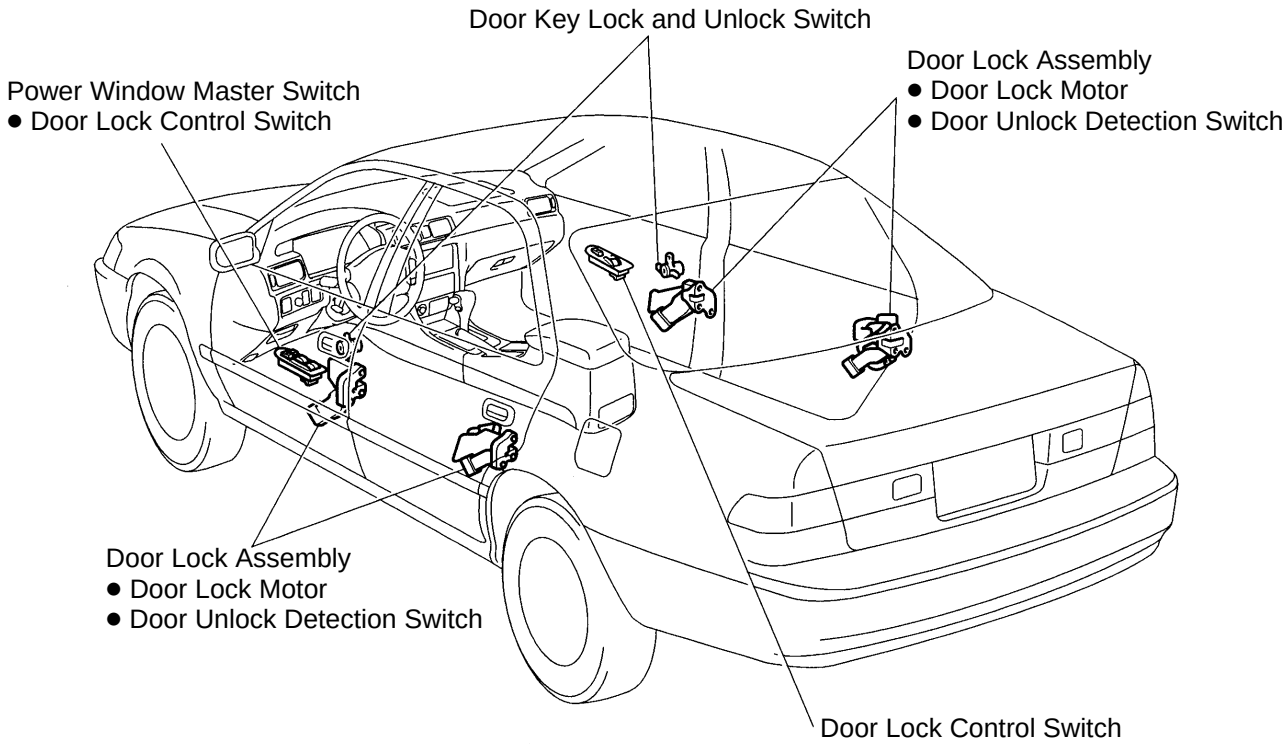

N20671
N20672

Z19053

BE0AQ–02

INSPECTION

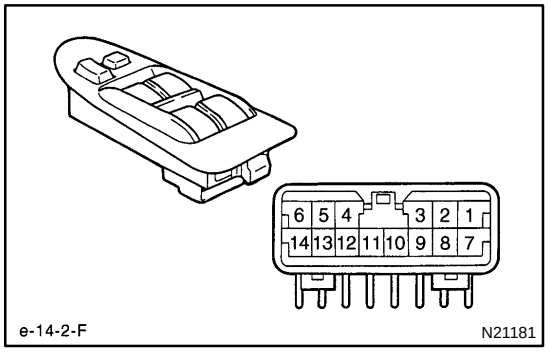

1. Master switch:
INSPECT DRIVER'S DOOR LOCK CONTROL SWITCH CONTINUITY

Switch position	Tester connection	Specified condition
LOCK	2 – 4	Continuity
OFF	–	No continuity
UNLOCK	4 – 7	Continuity

If continuity is not as specified, replace the switch.

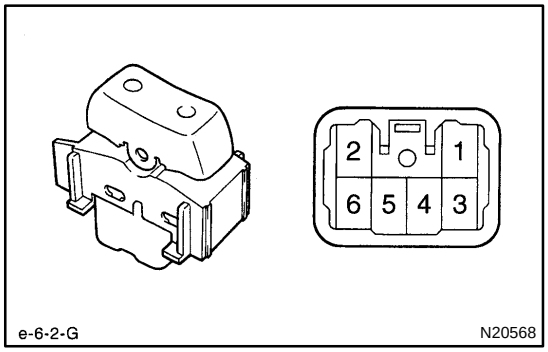

2. INSPECT PASSENGER'S DOOR LOCK CONTROL SWITCH CONTINUITY

Switch position	Tester connection	Specified condition
LOCK	3 – 6	Continuity
OFF	–	No continuity
UNLOCK	3 – 5	Continuity

If continuity is not as specified, replace the switch.

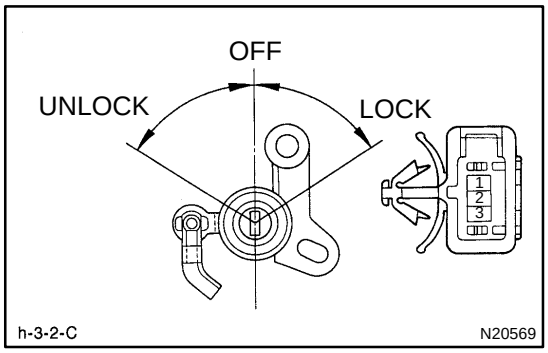

3. w/ Theft deterrent system:
INSPECT DOOR KEY LOCK AND UNLOCK SWITCH CONTINUITY

Switch position	Tester connection	Specified condition
LOCK	2 – 1	Continuity
OFF	–	No continuity
UNLOCK	3 – 1	Continuity

If continuity is not as specified, replace the switch.

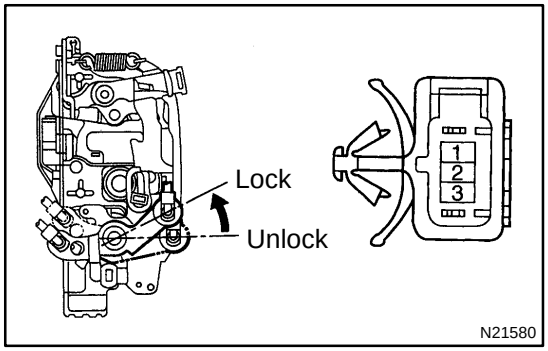

4. w/o Theft deterrent system:
INSPECT DOOR KEY LOCK AND UNLOCK SWITCH CONTINUITY

Switch position	Tester connection	Specified condition
LOCK	2 – 1	Continuity
OFF	–	No continuity
UNLOCK	3 – 1	Continuity

If continuity is not as specified, replace the switch.

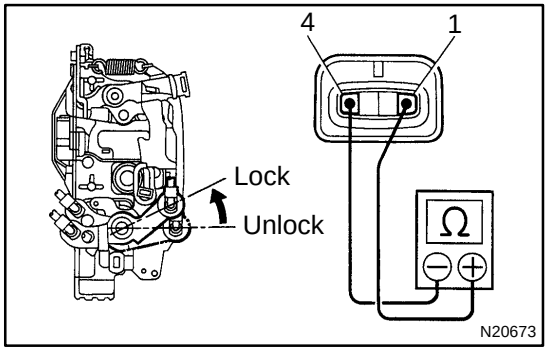

5. INSPECT DOOR UNLOCK DETECTION SWITCH CONTINUITY

Switch position	Tester connection	Specified condition
OFF (Door Lock set to LOCK)	–	No continuity
ON (Door Lock set to UNLOCK)	1 – 4	Continuity

If continuity is not as specified, replace the switch.

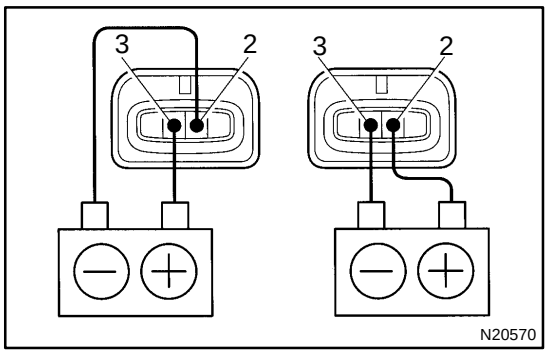

6. INSPECT MOTOR OPERATION

(a) Connect the positive (+) lead from the battery to terminal 3 and the negative (–) lead to terminal 2, and check that the door lock link moves to UNLOCK position.

(b) Remove the polarity and check that the door lock link moves to LOCK position.

If operation is not as specified, replace the door lock assembly.

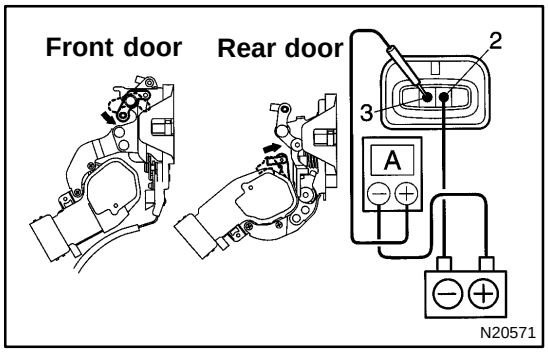

7. Using an ammeter:
INSPECT PTC THERMISTOR OPERATION

(a) Connect the positive (+) lead from the battery to terminal 3.

(b) Connect the positive (+) lead from the ammeter to terminal 2 and the negative (–) lead to battery negative (–) terminal, and check that the current changes from approximately 3.2 A to less than 0.5 A within 20 to 70 seconds.

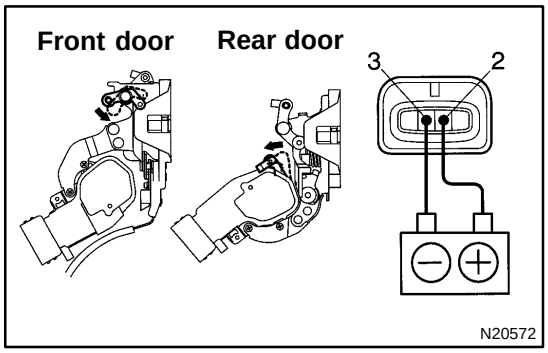

(c) Disconnect the leads from terminals.

(d) Approximately 60 seconds later, connect the positive (+) lead from the battery to terminal 2 and the negative (–) lead to terminal 3, and check that the door lock moves to the LOCK position.

If operation is not as specified, replace the door lock assembly.

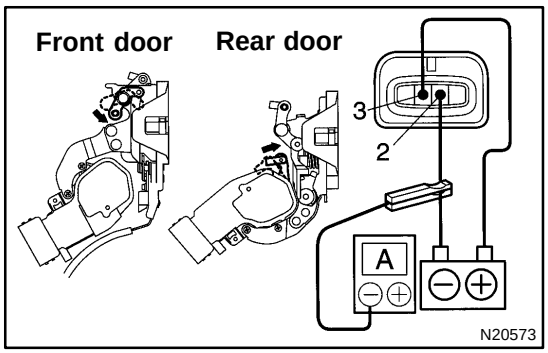

8. Using an ammeter with a current–measuring probe:
INSPECT PTC THERMISTOR OPERATION

(a) Connect the positive (+) lead from the battery to terminal 3 and the negative (–) lead to terminal 2.

(b) Attach a current–measuring probe to either the positive (+) lead or the negative (–) lead, and check that the current changes from approximately 3.2 A to less than 0.5 A within 20 to 70 seconds.

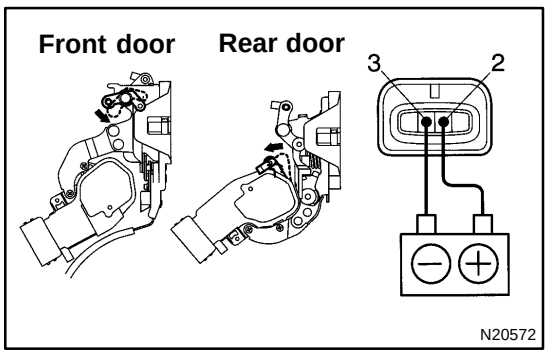

(c) Disconnect the leads from terminals.

(d) Approximately 60 seconds later, reverse the polarity, and check that the door lock moves to the LOCK position.

If operation is not as specified, replace the door lock assembly.

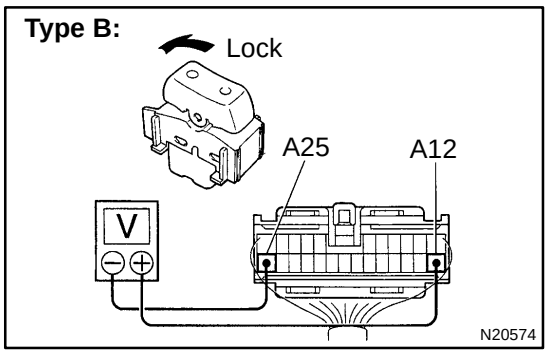

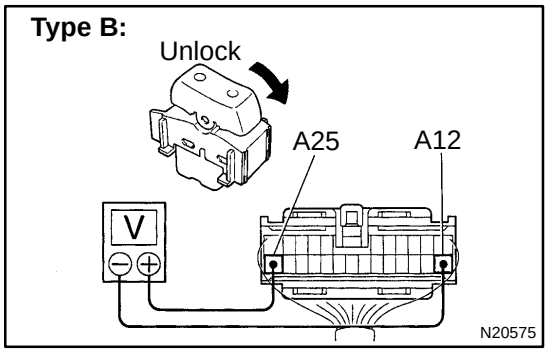

9. Door lock signal:
INSPECT INTEGRATION RELAY (Type B) OPERATION

HINT:

When the relay circuit is as specified, inspect the door lock signal.

(a) Connect the positive (+) lead from the voltmeter to terminal A12 and the negative (–) lead to terminal A25.

(b) Set the door lock control switch to UNLOCK and check that the voltage rises from 0 V to battery positive voltage for approximately 0.2 seconds.

(c) Reverse the polarity of the voltmeter leads.

(d) Set the door lock control switch to LOCK and check that the voltage rises from 0 V to battery positive voltage for approximately 0.2 seconds.

If operation is not as specified, replace the relay.

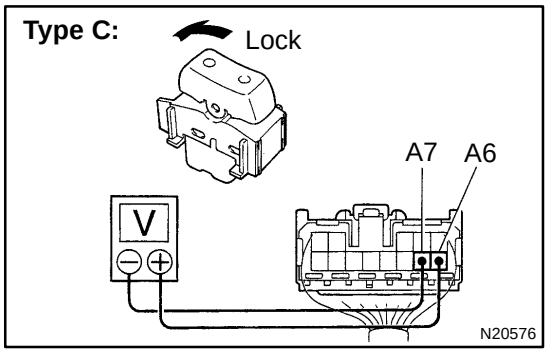

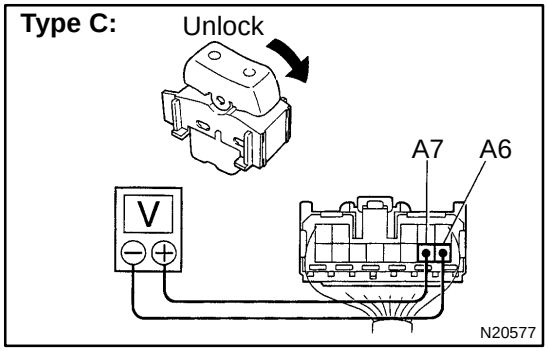

10. Door lock signal:
INSPECT INTEGRATION RELAY (Type C) OPERATION

HINT:

When the relay circuit is as specified, inspect the door lock signal.

(a) Connect the positive (+) lead from the voltmeter to terminal A6 and the negative (–) lead to terminal A7.

(b) Set the door lock control switch to UNLOCK and check that the voltage rises from 0 V to battery positive voltage for approximately 0.2 seconds.

(c) Reverse the polarity of the voltmeter leads.

(d) Set the door lock control switch to LOCK and check that the voltage rises from 0 V to battery positive voltage for approximately 0.2 seconds.

If operation is not as specified, replace the relay.

11. INSPECT INTEGRATION RELAY CIRCUIT
(See page BE–14)

SLIDING ROOF SYSTEM

BE0AR–02

LOCATION

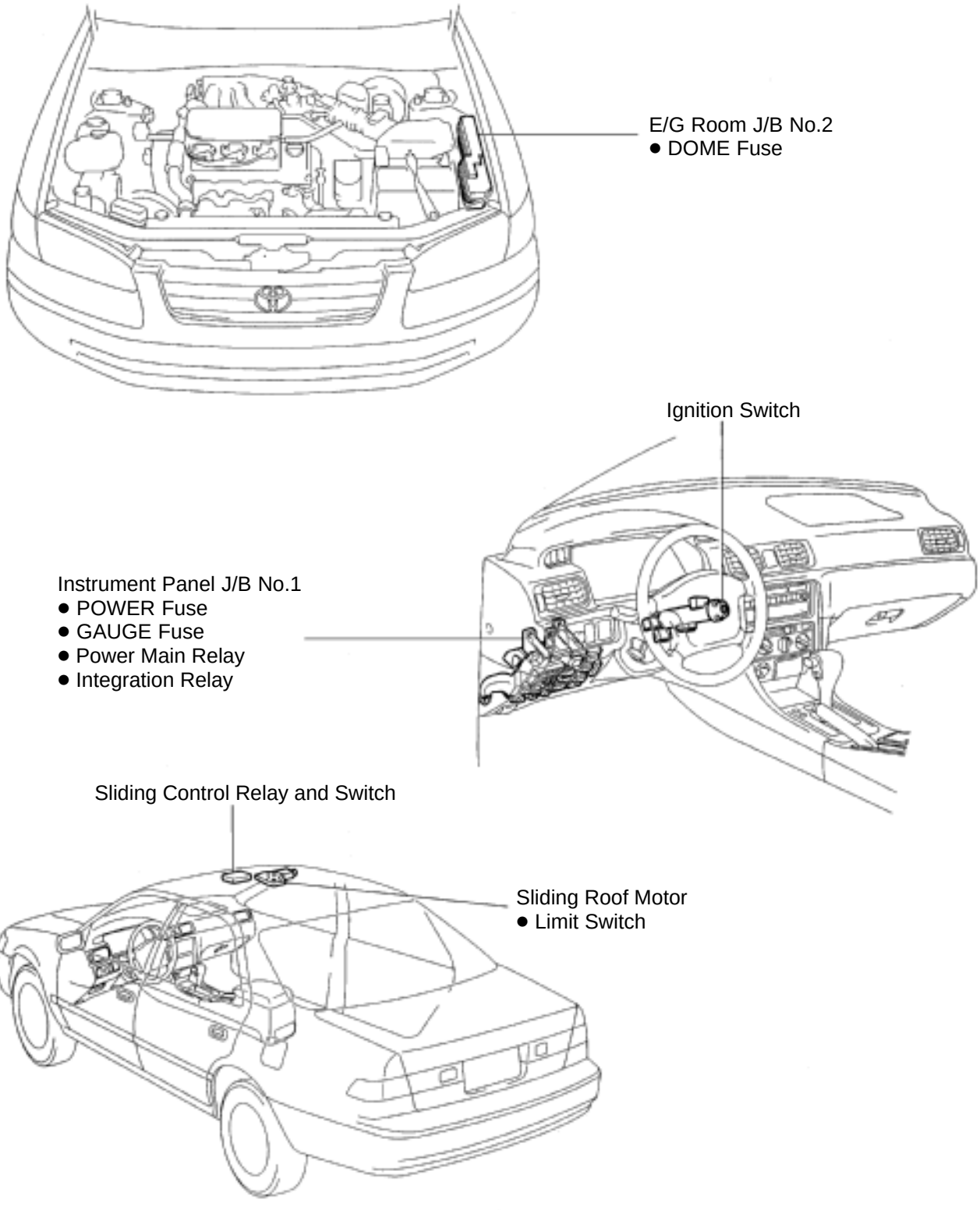

BE0AS–02

Wire harness side:

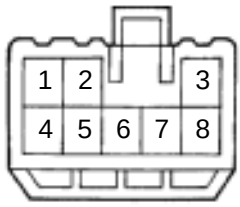

S–8–1 N21643

INSPECTION

1. INSPECT SLIDING ROOF CONTROL RELAY AND SWITCH CIRCUIT

Disconnect the connector from the relay and switch and inspect the connector on the wire harness side, as shown in the table.

TMMK made:

Tester connection	Condition	Specified condition
1 – 5	Constant	Continuity
2 – Ground	Constant	Continuity
3 – Ground	Limit switch No.1 is OFF (Sliding roof is in a closed position)	No continuity
3 – Ground	Limit switch No.1 is ON (Sliding roof is in an open position)	Continuity
7 – Ground	Limit switch No.2 is OFF (Sliding roof is in a tilt up position)	No continuity
7 – Ground	Limit switch No.2 is ON (Sliding roof is in the open position)	Continuity
8 – Ground	Limit switch No.3 is OFF (Sliding roof is in a closed position)	No continuity
8 – Ground	Limit switch No.3 is ON (Sliding roof is in an open position)	Continuity
4 – Ground	Ignition switch is in a LOCK or ACC position	* No voltage
4 – Ground	Ignition switch is in an ON position	Battery positive voltage

TMC made:

Tester connection	Condition	Specified condition
1 – 5	Constant	Continuity
2 – Ground	Constant	Continuity
3 – Ground	No.1 limit switch OFF (Sliding roof closed)	No continuity
3 – Ground	No.1 limit switch ON (Sliding roof opened)	Continuity
7 – Ground	No.2 limit switch OFF (Sliding roof tilted up open approx. 200 mm (7.87 in.)	No continuity
7 – Ground	No.2 limit switch ON (Except for conditions mentioned above)	Continuity
4 – Ground	Ignition switch LOCK or ACC	* No voltage
4 – Ground	Ignition switch ON	Battery positive voltage

*: Exceptions: For 60 seconds after the ignition switch is turned ON to OFF (ACC) or until driver or passenger door is opened after the ignition switch is turned ON to OFF (ACC).

If the circuit is not as specified, replace the relay and switch.

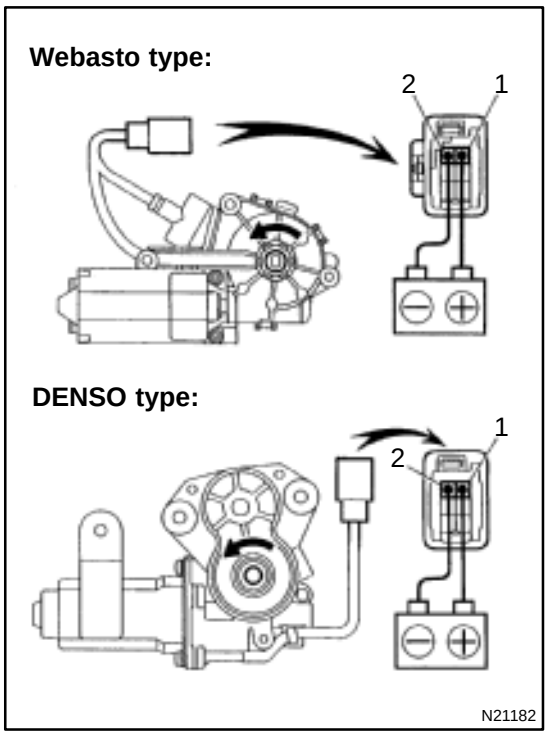

2. INSPECT SLIDING ROOF MOTOR OPERATION

(a) Connect the positive (+) lead from the battery to terminal 2 and the negative (–) lead to terminal 1, check that the motor turns counterclockwise (moves to the close and up side).

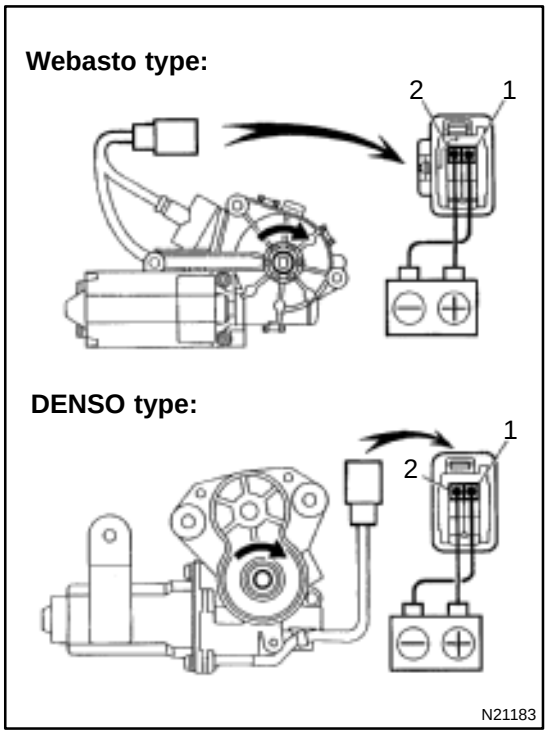

(b) Reverse the polarity, check that the motor turns clockwise (moves to the open and down side).

If operation is not as specified, replace the motor.

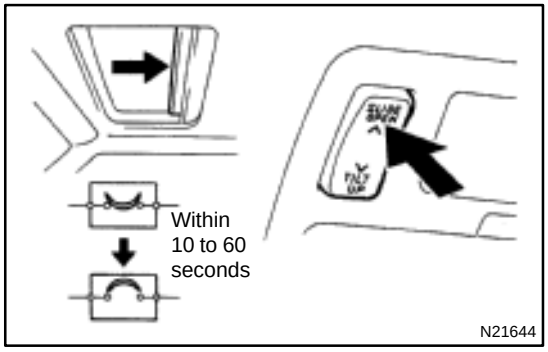

3. INSPECT CIRCUIT BREAKER OPERATION

(a) With the sliding roof in the fully opened position, hold the sliding roof switch in ”OPEN” position and check that is a circuit breaker operation noise is heard within 10 to 60 seconds.

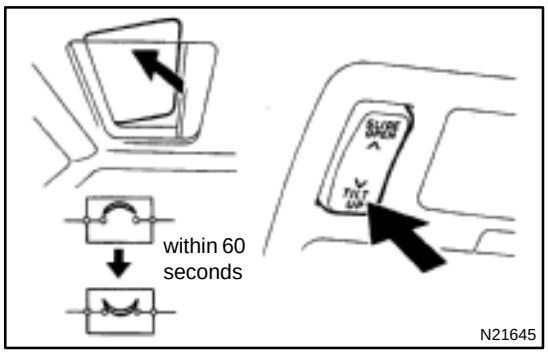

(b) With the sliding roof in fully opened position, hold the sliding roof switch in "TILT UP" position and check that the sliding roof begins to close within 60 seconds.

If operation is not as specified, replace the motor.

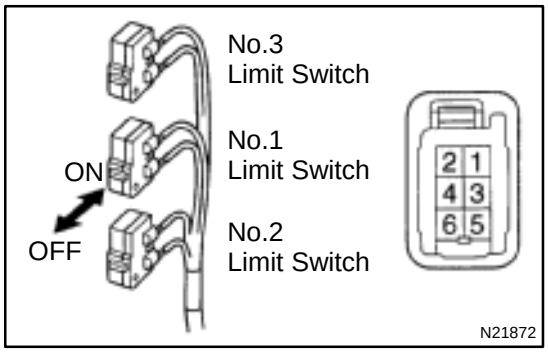

4. TMMK made:
INSPECT SLIDING ROOF LIMIT SWITCH CIRCUIT

Switch position	Tester connection	Specified condition
No.1 limit switch OFF (SW pin released)	3 – 5	No continuity
No.1 limit switch ON (SW pin pushed in)	3 – 5	Continuity
No.2 limit switch OFF (SW pin released)	3 – 6	No continuity
No.2 limit switch ON (SW pin pushed in)	3 – 6	Continuity
No.3 limit switch OFF (SW pin released)	3 – 4	No continuity
No.3 limit switch ON (SW pin pushed in)	3 – 4	Continuity

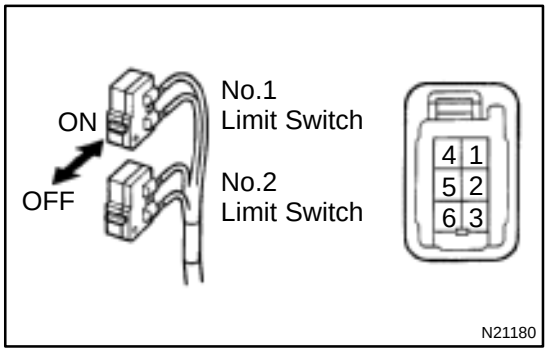

5. TMC made:
INSPECT SLIDING ROOF LIMIT SWITCH CIRCUIT

Switch position	Tester connection	Specified condition
No.1 limit switch OFF (SW pin released)	4 – 5	No continuity
No.1 limit switch ON (SW pin pushed in)	4 – 5	Continuity
No.2 limit switch OFF (SW pin released)	4 – 6	No continuity
No.2 limit switch ON (SW pin pushed in)	4 – 6	Continuity

If continuity is not as specified, replace the switch.

6. INSPECT KEY–OFF SLIDING ROOF OPERATION
(See integration relay circuit on page BE–14)

POWER SEAT CONTROL SYSTEM

BE0AT–02

LOCATION

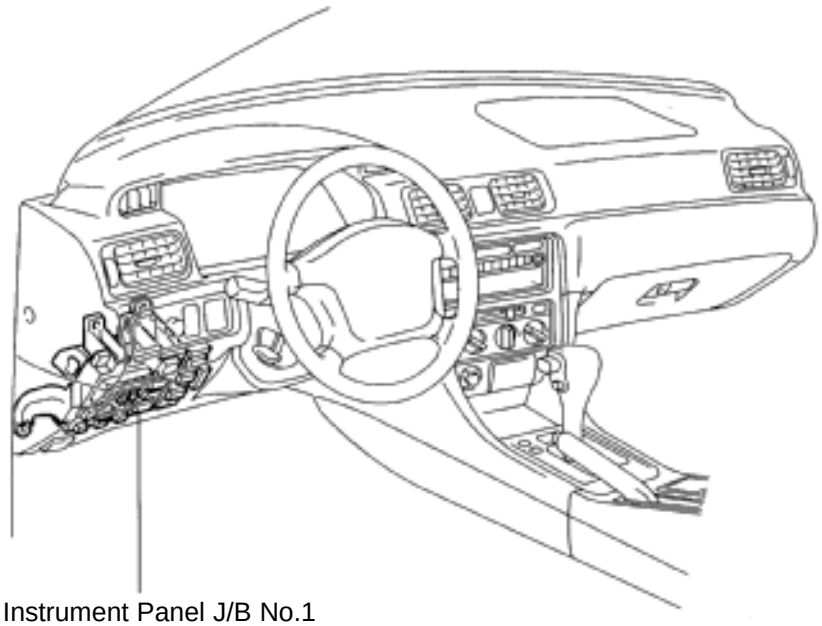

Instrument Panel J/B No.1
- CIG Fuse

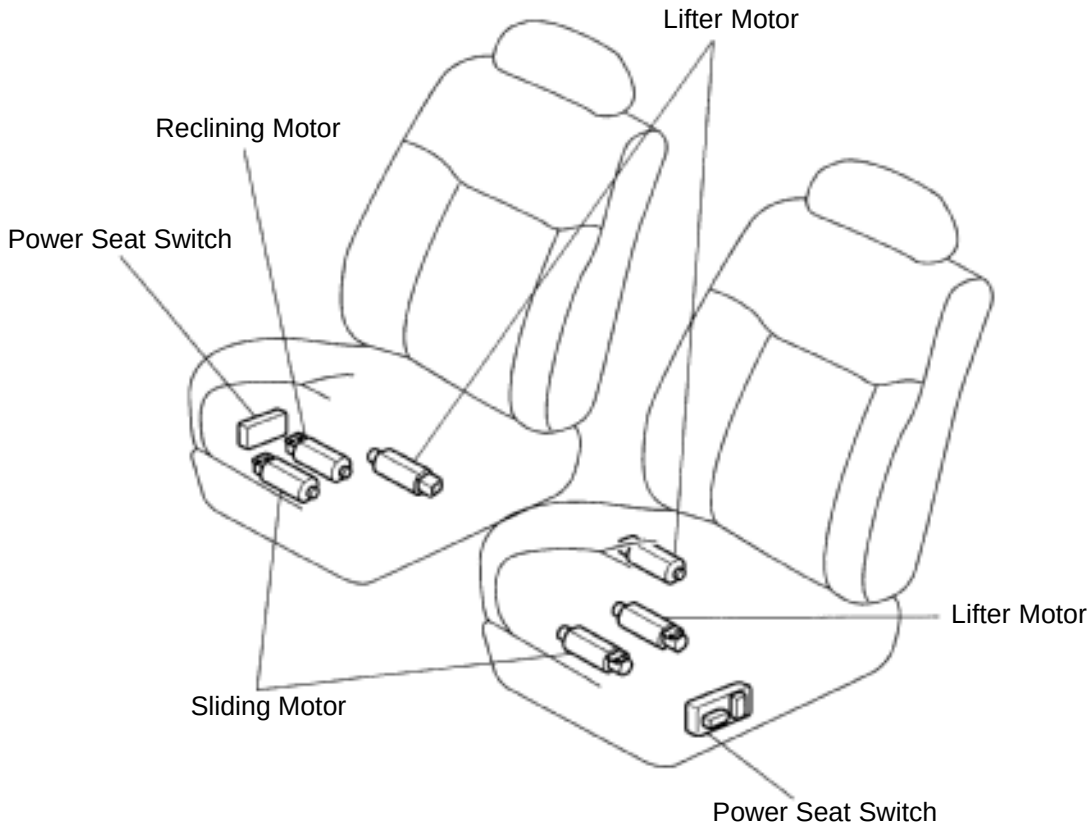

N20656
N21838

Z19504

BE0AU–02

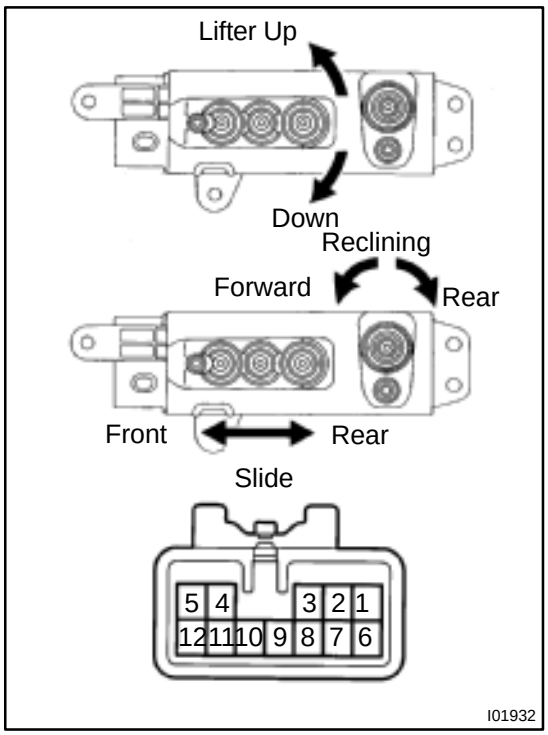

INSPECTION

1. TMC made:

INSPECT DRIVER'S SEAT SWITCH CONTINUITY

(a) Inspect the slide switch.

Switch position	Tester connection	Specified condition
FRONT	4 – 6, 8 – 11	Continuity
OFF	4 – 6, 6 – 8	Continuity
BACK	6 – 8, 4 – 11	Continuity

(b) Inspect the lifter switch.

Switch position	Tester connection	Specified condition
UP	2 – 11, 3 – 6	Continuity
OFF	3 – 6, 2 – 6	Continuity
DOWN	2 – 6, 3 – 11	Continuity

(c) Inspect the reclining switch.

Switch position	Tester connection	Specified condition
FORWARD	1 – 11, 5 – 6	Continuity
OFF	1 – 6, 5 – 6	Continuity
REAR	1 – 6, 5 – 11	Continuity

If continuity is not as specified, replace the switch.

2. TMMK made:

INSPECT DRIVER'S SEAT SWITCH CONTINUITY

(a) Inspect the slide switch.

Switch position	Tester connection	Specified condition
FRONT	2 – 11, 4 – 7	Continuity
OFF	4 – 11, 4 – 7	Continuity
BACK	2 – 7, 4 – 11	Continuity

(b) Inspect the lifter switch.

Switch position	Tester connection	Specified condition
UP	2 – 5, 4 – 8	Continuity
OFF	4 – 5, 4 – 8	Continuity
DOWN	2 – 8, 4 – 5	Continuity

(c) Inspect the reclining switch.

Switch position	Tester connection	Specified condition
FORWARD	2 – 12, 4 – 6	Continuity
OFF	4 – 12, 4 – 6	Continuity
REAR	2 – 6, 4 – 12	Continuity

If continuity is not as specified, replace the switch.

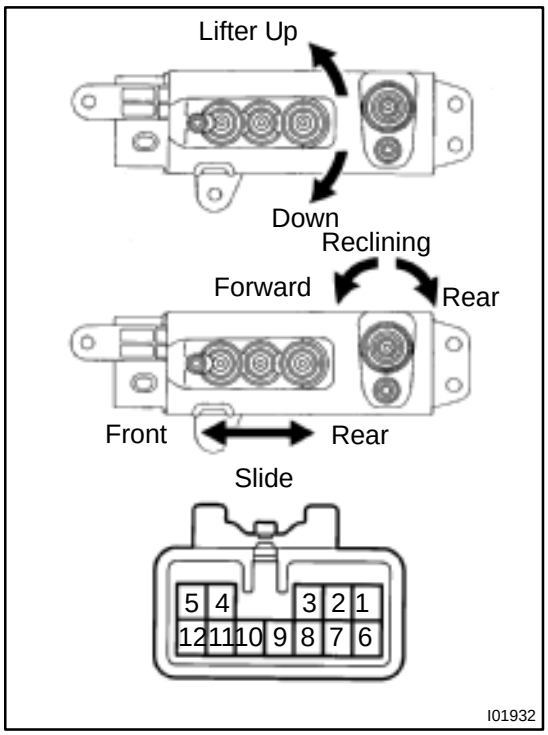

3. TMC made:

INSPECT PASSENGER'S SEAT CONTINUITY

(a) Inspect the slide switch.

Switch position	Tester connection	Specified condition
FRONT	4 – 6, 8 – 11	Continuity
OFF	4 – 6, 6 – 8	Continuity
BACK	6 – 8, 4 – 11	Continuity

(b) Inspect the lifter switch.

Switch position	Tester connection	Specified condition
UP	2 – 6, 3 – 11	Continuity
OFF	3 – 6, 2 – 6	Continuity
DOWN	3 – 6, 2 – 11	Continuity

(c) Inspect the reclining switch.

Switch position	Tester connection	Specified condition
FORWARD	5 – 6, 1 – 11	Continuity
OFF	1 – 6, 5 – 6	Continuity
REAR	1 – 6, 5 – 11	Continuity

If continuity is not as specified, replace the switch.

4. TMMK made:

INSPECT PASSENGER'S SEAT CONTINUITY

(a) Inspect the slide switch.

Switch position	Tester connection	Specified condition
FRONT	2 – 11, 4 – 7	Continuity
OFF	4 – 11, 4 – 7	Continuity
BACK	2 – 7, 4 – 11	Continuity

(b) Inspect the lifter switch.

Switch position	Tester connection	Specified condition
UP	2 – 8, 4 – 5	Continuity
OFF	4 – 5, 4 – 8	Continuity
DOWN	2 – 5, 4 – 8	Continuity

(c) Inspect the reclining switch.

Switch position	Tester connection	Specified condition
FORWARD	2 – 12, 4 – 6	Continuity
OFF	4 – 12, 4 – 6	Continuity
REAR	2 – 6, 4 – 12	Continuity

If continuity is not as specified, replace the switch.

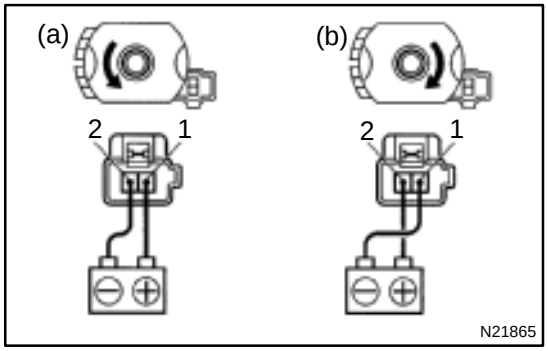

5. INSPECT SLIDE MOTOR OPERATION

(a) Connect the positive (+) lead from the battery to terminal 2 and the negative (–) lead to terminal 1, check that the motor turns counterclockwise.

(b) Reverse the polarity, check that the motor turns clockwise.

If operation is not as specified, replace the seat adjuster.

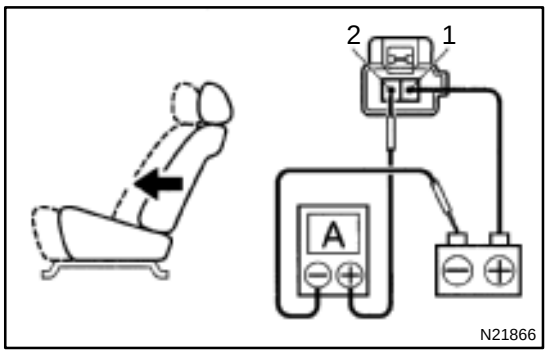

6. INSPECT SLIDE MOTOR PTC THERMISTOR OPERATION

(a) Connect the positive (+) lead from the battery to terminal 1, the positive (+) lead from the ammeter to terminal 2 and the negative (–) lead to the battery negative (–) terminal, then move the seat cushion to the front position.

(b) Continue to apply voltage, check that the current changes to less than 1 ampere within 4 to 90 seconds.

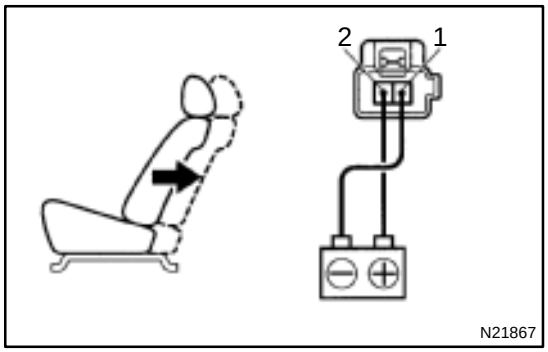

(c) Disconnect the leads from terminals.

(d) Approximately 60 seconds later, connect the positive (+) lead from the battery to terminal 2 and the negative (–) lead to terminal 1, check that the seat cushion begins to move backwards.

If operation is not as specified, replace the seat adjuster.

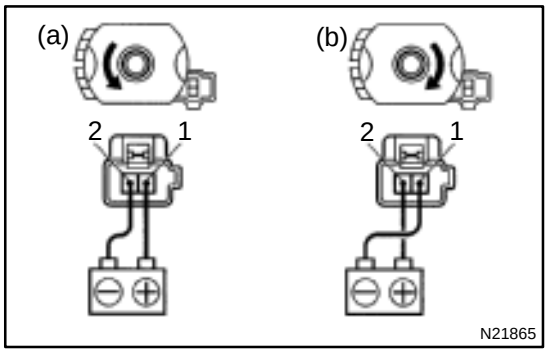

7. INSPECT LIFTER MOTOR OPERATION

(a) Connect the positive (+) lead from the battery to terminal 2 and the negative (–) lead to terminal 1, check that the motor turns counterclockwise.

(b) Reverse the polarity, check that the motor turns clockwise.

If operation is not as specified, replace the seat adjuster.

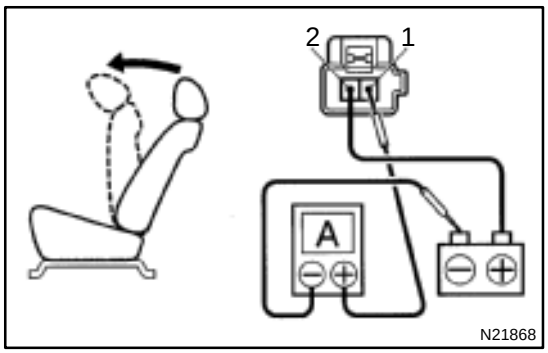

8. INSPECT LIFTER PTC THERMISTOR OPERATION

(a) Connect the positive (+) lead from the battery to terminal 1, the positive (+) lead from the ammeter to terminal 2 and the negative (–) lead to the battery negative (–) terminal, then move the seat cushion to the highest position.

(b) Continue to apply voltage, check that the current changes to less than 1 ampere within 4 to 90 seconds.

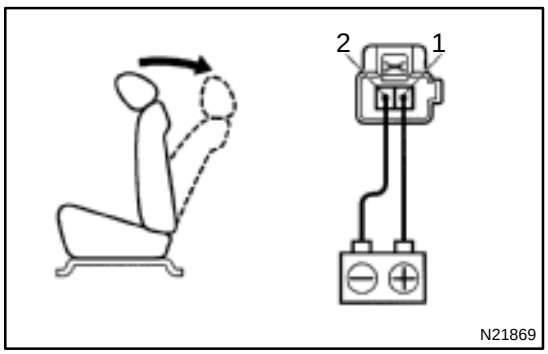

(c) Disconnect the leads from the terminals.

(d) Approximately 60 seconds later, connect the positive (+) lead from the battery to terminal 2 and the negative (–) lead to terminal 1, check that the seat cushion begins to fall down.

If operation is not as specified, replace the seat adjuster.

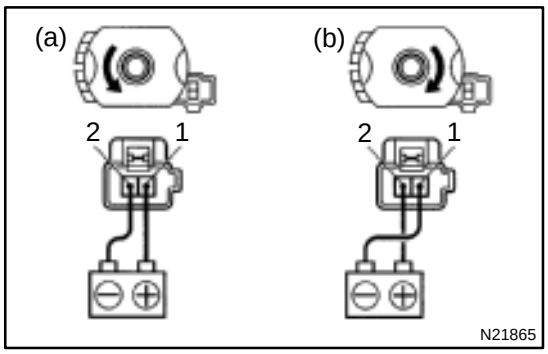

9. INSPECT RECLINING MOTOR OPERATION

(a) Connect the positive (+) lead from the battery to terminal 2 and the negative (–) lead to terminal 1, check that the motor turns counterclockwise.

(b) Reverse the polarity, check that the motor turns clockwise.

If operation is not as specified, replace the seat adjuster.

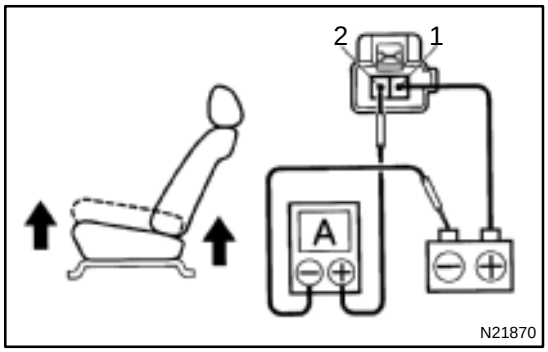

10. INSPECT RECLINING MOTOR PTC THERMISTOR OPERATION

(a) Connect the positive (+) lead from the battery to terminal 2, the positive (+) lead from the ammeter to terminal 1 and the negative (–) lead to the battery negative (–) terminal, then recline the seat back to the most forward position.

(b) Continue to apply voltage, check that the current change to less than 1 ampere within 4 to 90 seconds.

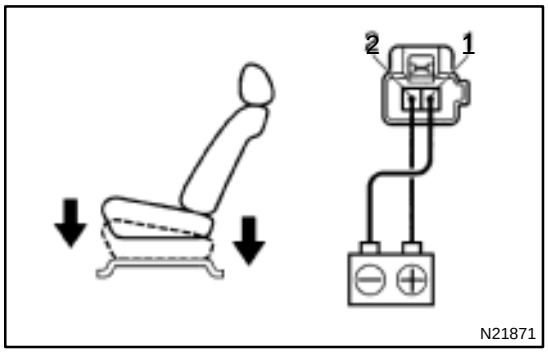

(c) Disconnect the leads from the terminals.

(d) Approximately 60 seconds later, connect the positive (+) lead from the battery to terminal 1 and the negative (–) lead to terminal 2, check that the seat back starts to fall backward.

If operation is not as specified, replace the seat adjuster.

POWER MIRROR CONTROL SYSTEM

BE0AV–03

LOCATION

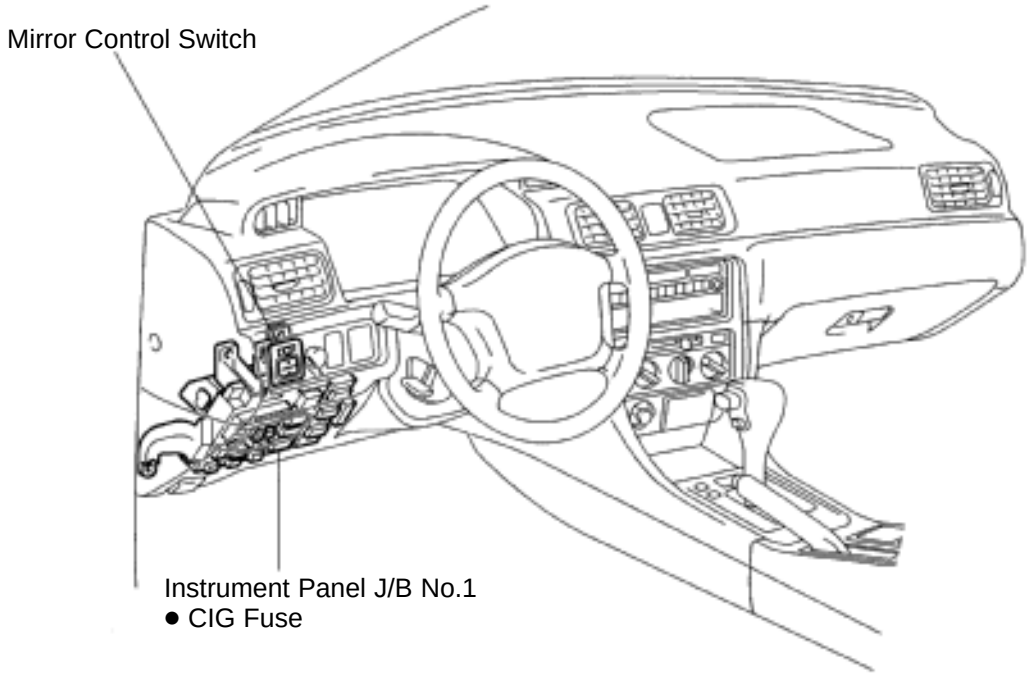

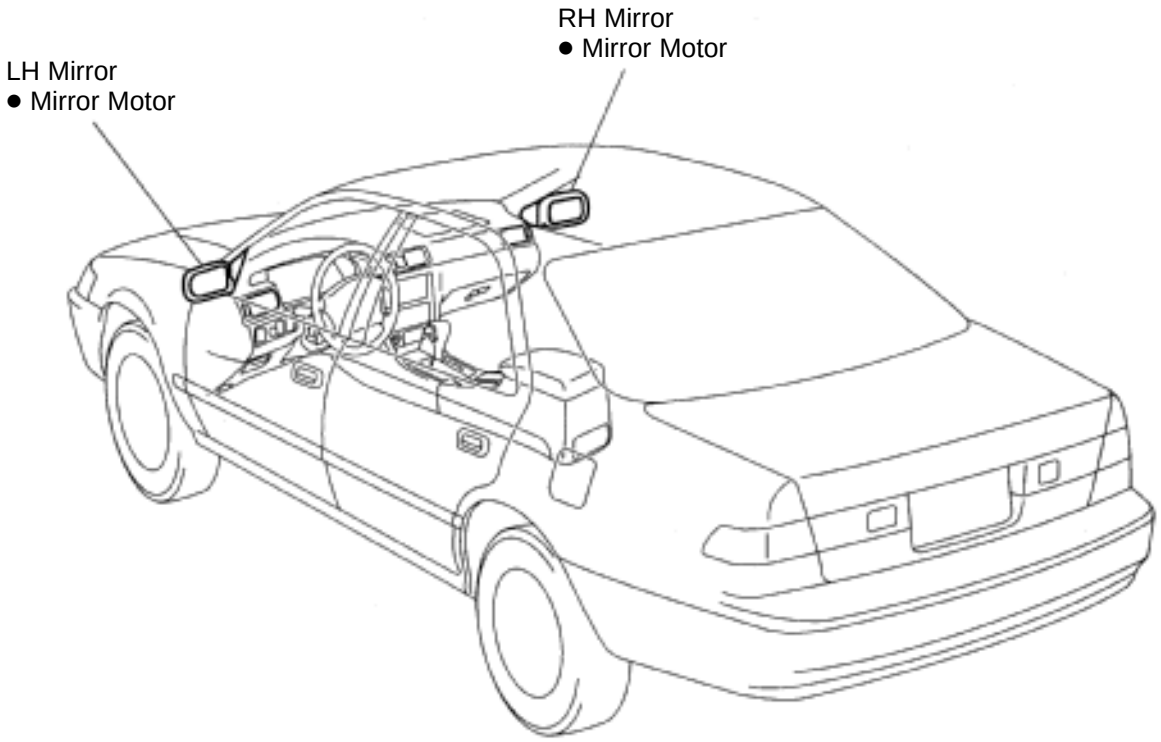

N21806
N21807

Z19488

BE0AW–03

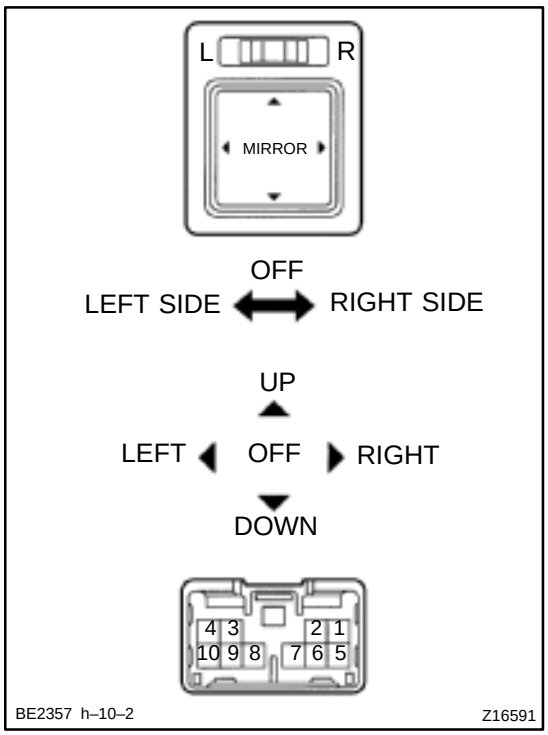

INSPECTION

1. Master switch left side:
INSPECT MIRROR CONTROL SWITCH CONTINUITY

Switch position	Tester connection	Specified condition
OFF	–	No continuity
UP	1 – 9, 6 – 10	Continuity
DOWN	1 – 10, 6 – 9	Continuity
LEFT	5 – 9, 6 – 10	Continuity
RIGHT	5 – 10, 6 – 9	Continuity

If continuity is not as specified, replace the switch.

2. Master switch right side:
INSPECT MIRROR CONTROL SWITCH CONTINUITY

Switch position	Tester connection	Specified condition
OFF	–	No continuity
UP	6 – 10, 7 – 9	Continuity
DOWN	6 – 9, 7 – 10	Continuity
LEFT	6 – 10, 8 – 9	Continuity
RIGHT	6 – 9, 8 – 10	Continuity

If continuity is not as specified, replace the switch.

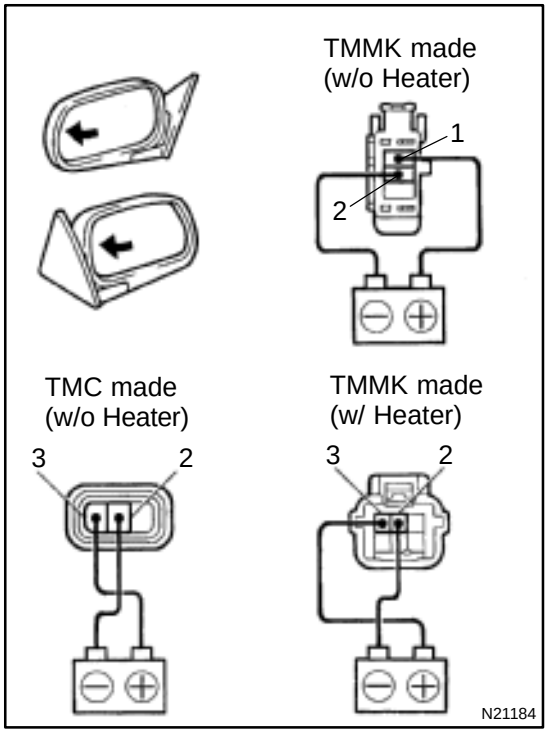

3. INSPECT MIRROR MOTOR

(a) TMMK made (w/o Heater):
Connect the positive (+) lead from the battery to terminal 1 and negative (–) lead to terminal 2, check that the mirror turns to left side.

(b) TMC made (w/o Heater):
Connect the positive (+) lead from the battery to terminal 3 and negative (–) lead to terminal 2, check that the mirror turns to left side.

(c) TMMK made (w/ Heater):
Connect the positive (+) lead from the battery to terminal 3 and negative (–) lead to terminal 2, check that the mirror turns to left side.

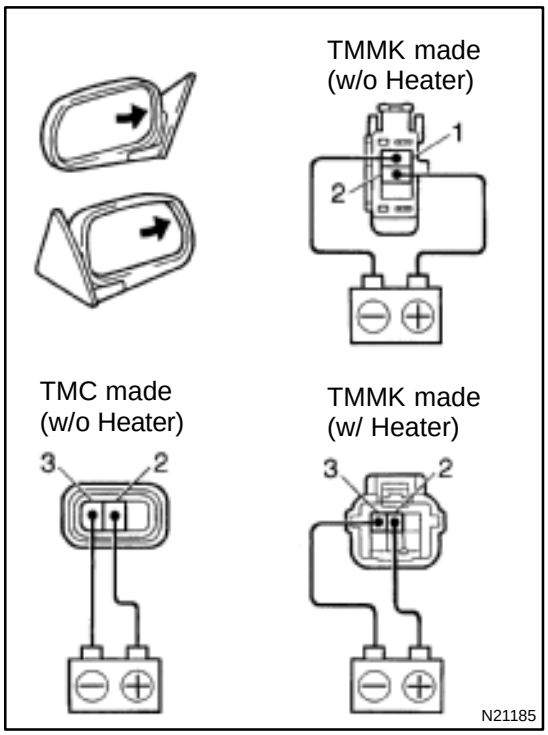

(d) Reverse the polarity and check that the mirror turns to right side.

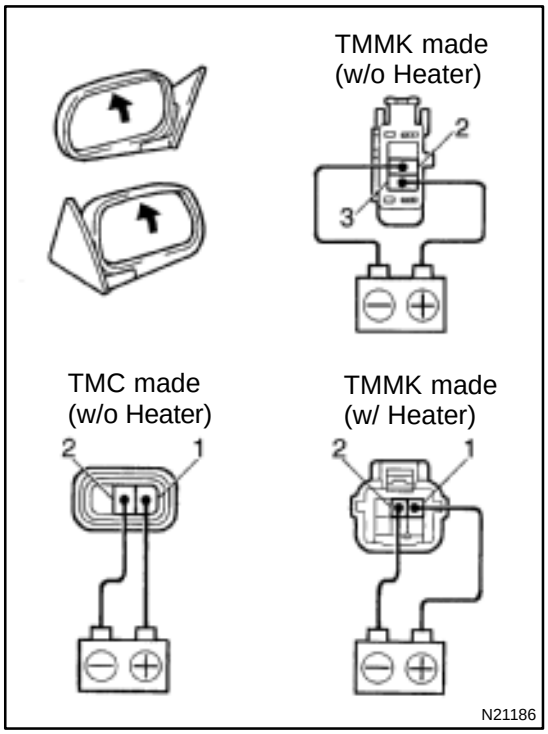

(e) TMMK made (w/o Heater):
Connect the positive (+) lead from the battery to terminal 3 and the negative (–) lead to terminal 2, check that the mirror turns upward.

(f) TMC made (w/o Heater):
Connect the positive (+) lead from the battery to terminal 1 and the negative (–) lead to terminal 2, check that the mirror turns upward.

(g) TMMK made (w/ Heater):
Connect the positive (+) lead from the battery to terminal 1 and the negative (–) lead to terminal 2, check that the mirror turns upward.

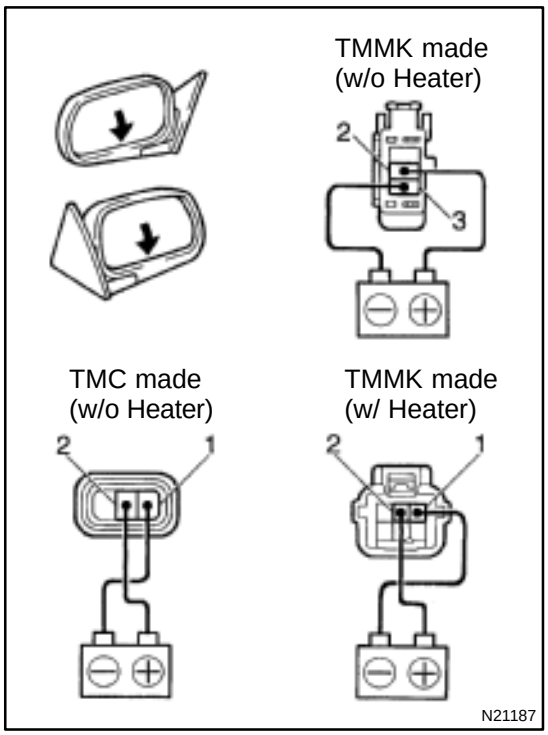

(h) Reverse the polarity, check that the mirror turns downward.

If operation is not as specified, replace the mirror assembly.

AUDIO SYSTEM

DESCRIPTION

BE0AX–03

1. RADIO WAVE BAND

The radio wave bands used in radio broadcasting are as follows:

Frequency	30 kHz	300 kHz	3 MHz	30 MHz	300 MHz
Designation	LF	MF	HF	VHF	
Radio wave		AM ⟷		FM ⟷	
Modulation method	Amplitude modulation			Frequency modulation	

LF: Low frequency MF: Medium Frequency HF: High Frequency VHF: Very High Frequency

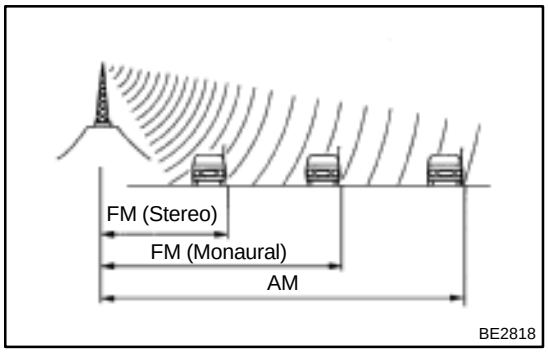

2. SERVICE AREA

There are great differences in the size of the service area for AM and FM monaural. Sometimes FM stereo broadcasts cannot be received even through AM comes in very clearly.
Not only does FM stereo have the smallest service area, but it also picks up static and other types of interference (”noise”) easily.

3. RECEPTION PROBLEMS

Besides the problem of static, there are also the problems called ”fading”, ”multipath” and ”fade out”. These problems are caused not by electrical noise but by the nature of the radio waves themselves.

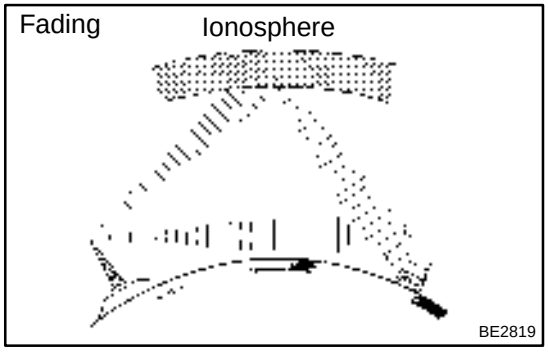

- Fading
  Besides electrical interference, AM broadcasts are also susceptible to other types of interference, especially at night. This is because AM radio waves bounce off the ionosphere at night. These radio waves then interfere with the signals from the same transmitter that reach the vehicle’s antenna directly. This type of interference is called ”fading”.

Multipath



BE2820

- Multipath
  One type of interference caused by bouncing of radio waves off obstructions is called ”multipath”. Multipath occurs when a signal from the broadcast transmitter antenna bounces off buildings and mountains and interferes with the signal that is received directly.

Fade Out



BE2821

- Fade Out
  Because FM radio waves are of higher frequencies than AM radio waves, they bounce off buildings, mountains, and other obstructions. For this reason, FM signals often seem to gradually disappear or fade away as the vehicle goes behind a building or other obstructions. This is called ”fade out”.

4. NOISE PROBLEMS

(a) Questionnaire for noise:

It is very important for noise troubleshooting to have good understanding of the claims from the customers, so that make the best use of following quenstionnaire and diagnose the problem accurately.

AM	Noise occurs at a specific place.	Strong possibility of foreign noise.
	Noise occurs when listening to faint broadcasting.	There is a case that the same program is broadcasted from each local station and that may be the case you are listening to different station if the program is the same.
	Noise occurs only at night.	Strong possibility of the beat from a distant broadcasting.
FM	Noise occurs while driving and at a specific place.	Strong possibility of multipath noise and fading noise caused by the changes of FM waves.

HINT:

In the case that the noise occurrence condition does not meet any of the above quenstionnaire, check based on the ”Trouble Phenomenon”.

Refer to previous page for multipath and fading.

(b) Matlers that require attention when checking:

- Noise coming into the radio usually has no harm for practical use as the noise protection is taken and it is hardly thinkable for an extremely loud noise to come in. When extremely loud noise comes into the radio, check if the grounding is normal where the antenna is installed.
- Check if all the regular noise prevention parts are properly installed and if there is any installation of non–authorized parts and non–authorized wiring.
- If you leave the radio out of tune (not tuning), it is easy to diagnose the phenomenon as noise occurs frequently.

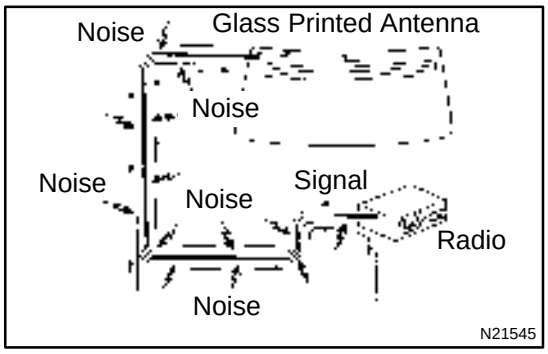

(c) Antenna and noise:
Electronic signal received by the antenna will reach to the radio transmitting through the core wire of the coaxial cable. Any noise wave other than radio wave is mixed into this core wire, that naturally causes noise in the radio and poor sound quality. In order to prevent these noises from mixing into the radio, the core wire inside the coaxial cable is covered with a mesh wire called shield wire. This shield wire shelters the noise and transmits it to the ground, thus preventing noise from mixing in. If this shield wire has grounding failure, that causes noise.

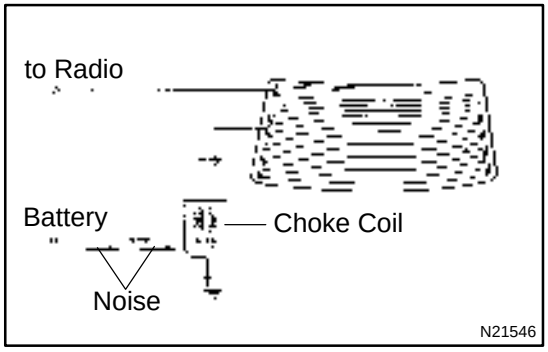

(d) Choke coil and noise:
The choke coil is connected in the rear window defogger circuit. This is conneted so to prevent noise from mixing into the radio by making the noise current included in the power source of the rear window defogger flow to the ground.

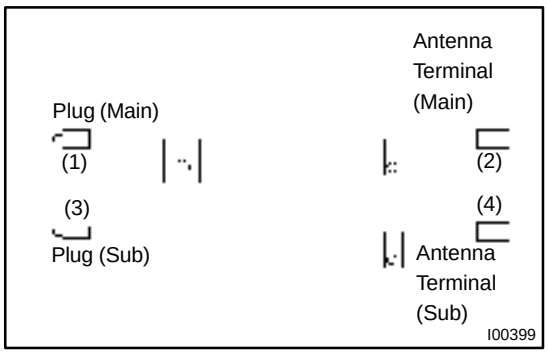

5. Glass printed antenna:
GROUNDING FOR THE ANTENNA CORD AND CHOKE COIL

HINT:

During troubleshooting, in case that the antenna code continuity check, grounding check and grounding check of the choke coil are needed, please check refering to the following illustration.

Terminal connection	Normal condition
(1) ↔ (2)	Continuity
(3) ↔ (4)	Continuity

Ground point:

Antenna Cord

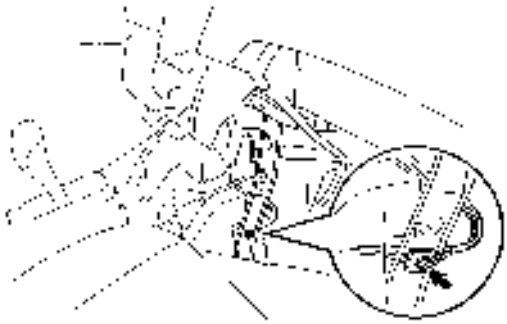

Center Brace



Pillar (RH)

Choke Coil

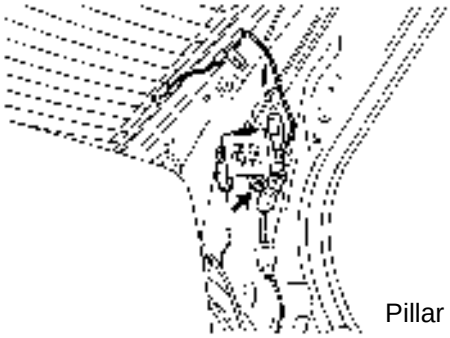

Pillar (LH)

N21548 I00402
I00403

I00407

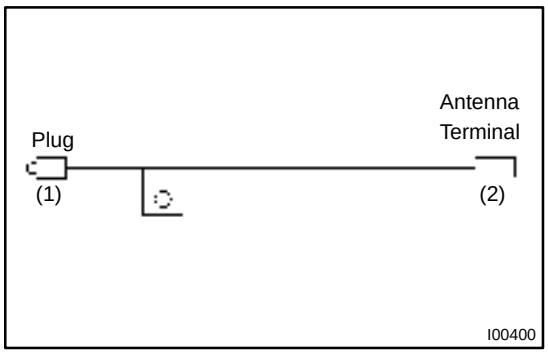

6. Fixed mast antenna:
GROUNDING FOR THE ANTENNA CORD AND CHOKE COIL

HINT:

During troubleshooting, in case that the antenna code continuity check, grounding check and grounding check of the choke coil are needed, please check refering to the following illustrations.

Terminal connection	Normal condition
(1) ↔ (2)	Continuity

Ground point:

Antenna Cord

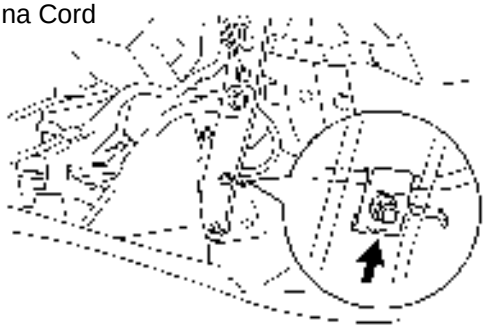

Center Brace

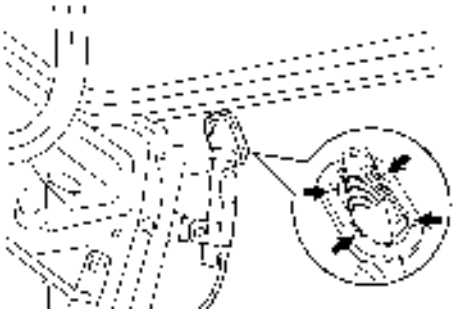

Luggage Room (RH side)

Noise Filter

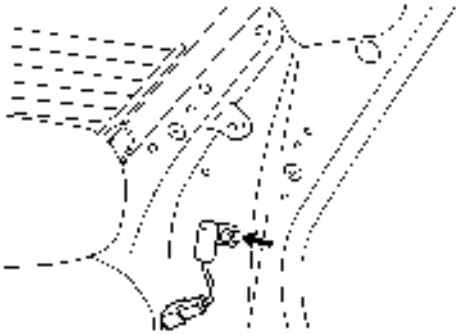

Pillar (LH)

I00427 I00428
I00429

I00408

BE0AY–05

TROUBLESHOOTING

NOTICE:

When replacing the internal mechanism (computer part) of the audio system, be careful that no part of your body or clothing comes in contact with the terminals of the leads from the IC, etc. of the replacement part (spare part).

HINT:

This inspection procedure is a simple troubleshooting which should be carried out on the vehicle during system operation and was prepared on the assumption of system component troubles (except for the wires and connectors, etc.).

Always inspect the trouble taking the following items into consideration.

Open or short circuit of the wire harness

Connector or terminal connection fault

	Problem	No.
Radio	Radio not operating when power switch turned 'ON'.	1
	Display indicates when power switch turned 'ON', but no sound (including 'noise') is produced.	2
	Noise present, but AM – FM not operating.	3
	Any speaker does not work.	4
	Either AM or FM does not work, reception poor (volume faint), Fewer station presets.	5
	Poor reception.	6
	Sound quality poor.	7
	Preset memory disappears.	8
Tape Player	Cassette tape cannot be inserted.	9
	Cassette tape is inserted, but no power.	10
	Power coming in, but tape player not operating.	11
	Either speaker does not work.	12
	Sound quality poor. (volume faint)	13
	Tape jammed, malfunction with tape speed or auto–reverse.	14
	Cassette tape will not be ejected.	15
CD Player	CD cannot be inserted.	16
	CD inserted, but no power.	17
	Power coming in, but CD player not operating.	18
	Sound jumps.	19
	Sound quality poor (Volume faint).	20
	Either speaker does not work.	21
	CD will not be ejected.	22
Noise	Noise occurs.	23
	Noise produced by vibration or shock while driving.	24
	Noise produced when engine starts.	25

The term "AM" includes LW, MW and SW, and the term "FM" includes UKW.

1	Radio	RADIO NOT OPERATING WHEN POWER SWITCH TURNED 'ON'

- Radio–CD Plater Unit (Built–in Power Amplifier)
- Radio–Tape Plater Unit (Built–in Power Amplifier)

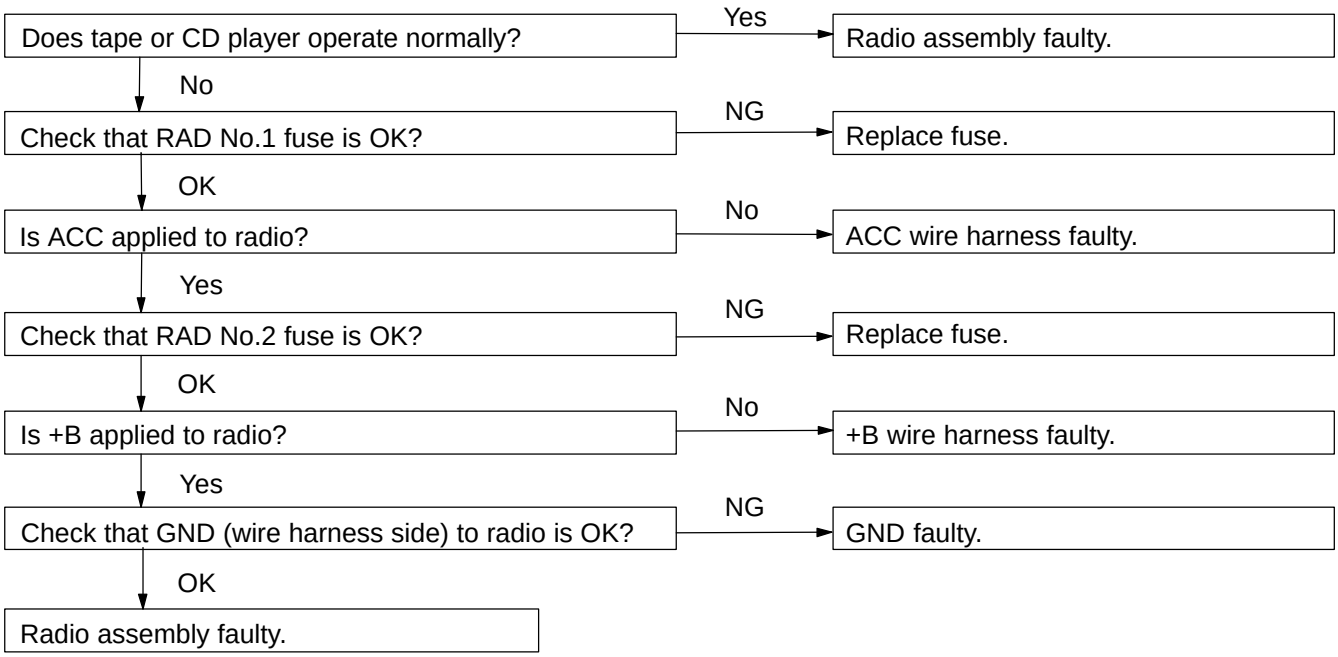

- Radio–Tape Player Unit (Separate Power Amplifier)
- Radio–Tape Player–CD Player Unit (Separate Power Amplifier)
- Radio–CD Player Unit (Separate Power Amplifier)

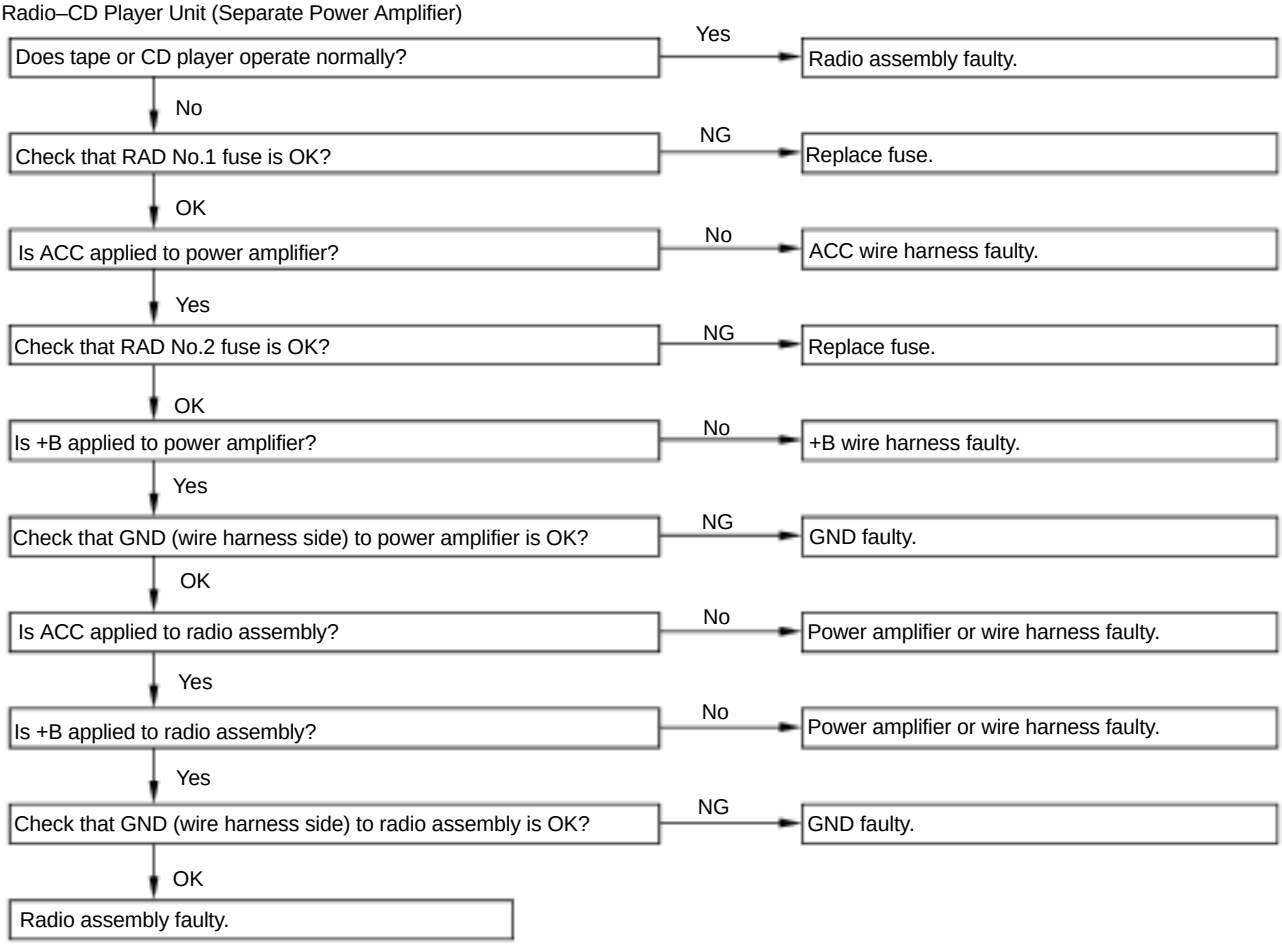

I03349

2	Radio	DISPLAY INDICATES WHEN POWER SWITCH TURNED 'ON', BUT NO SOUND (INCLUDING 'NOISE') IS PRODUCED

- Radio–Tape Player Unit (Built–in Power Amplifier)
- Radio–CD Player Unit (Built–in Power Amplifier)

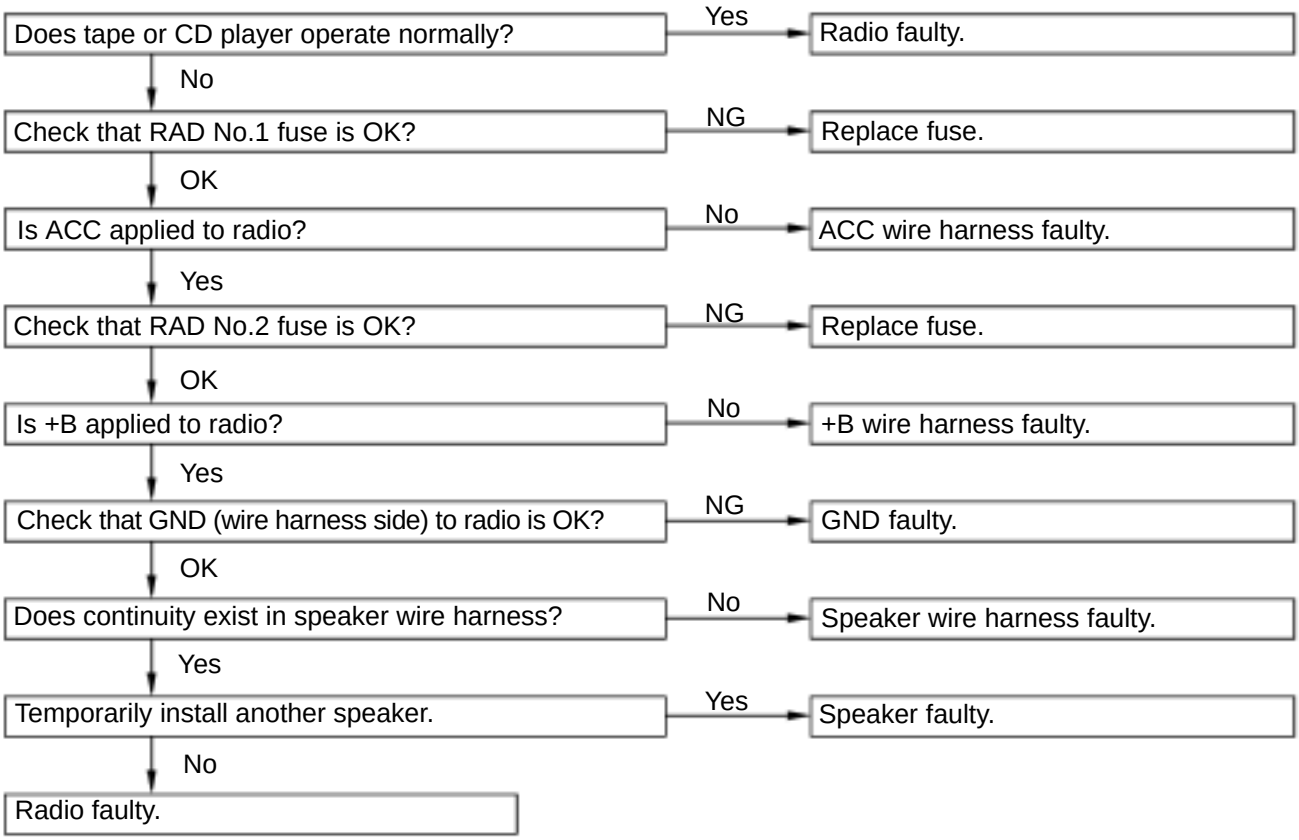

I03350

- Radio–Tape Player Unit (Separate Power Amplifier)
- Radio–Tape Player–CD Player Unit (Separate Power Amplifier)
- Radio–CD Player Unit (Separate Power Amplifier)

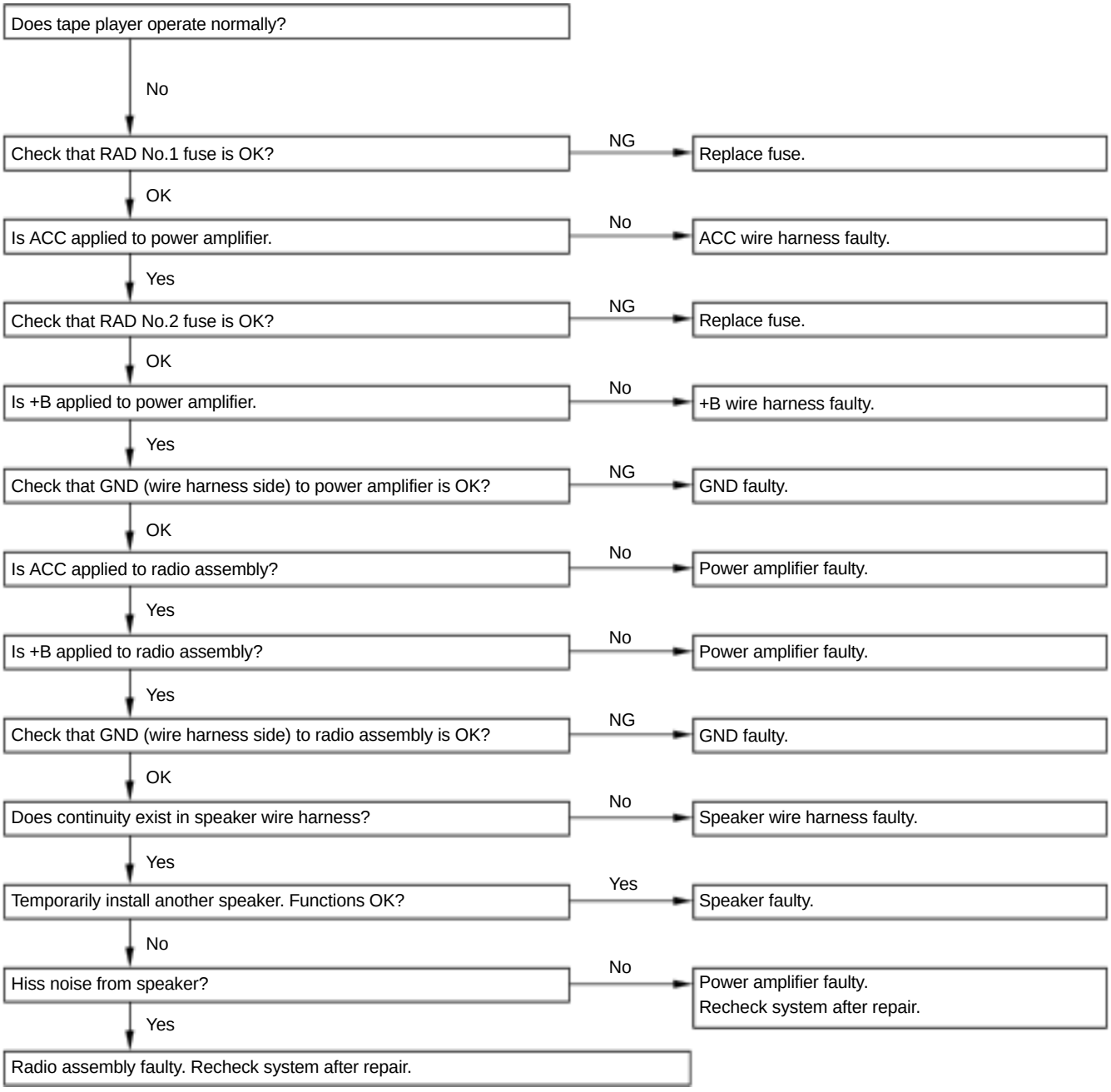

V08239

3	Radio	NOISE PRESENT, BUT AM–FM NOT OPERATING

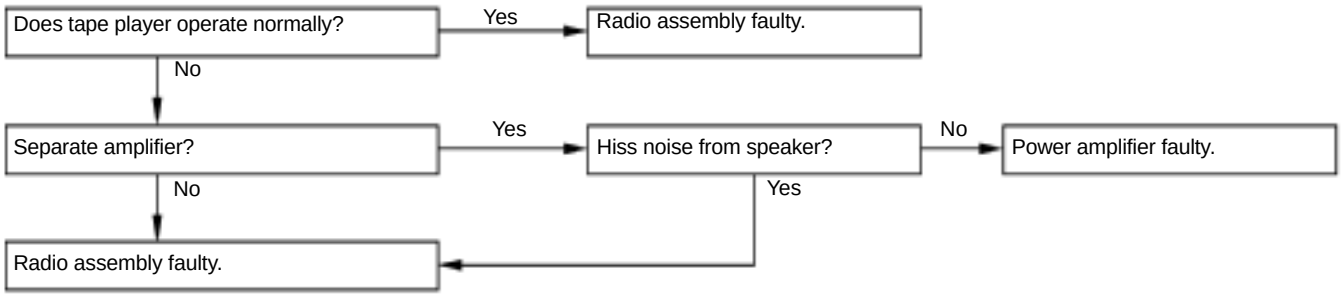

4	Radio	ANY SPEAKER DOSE NOT WORK

- Radio–Tape Player Unit (Built–in Power Amplifier)
- Radio–CD Player Unit (Built–in Power Amplifier)

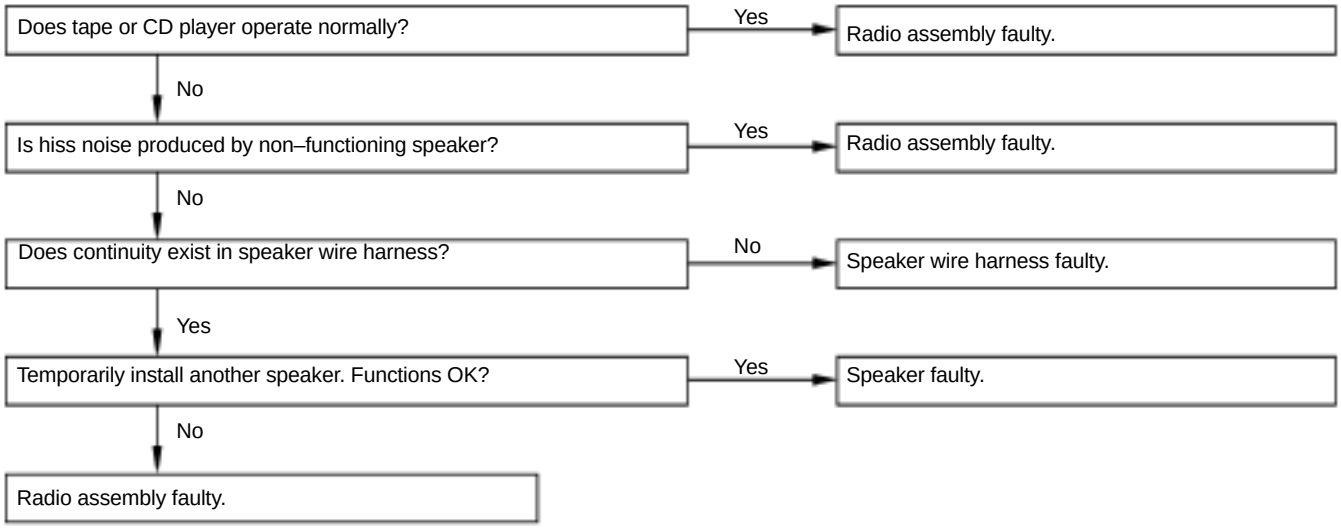

- Radio–Tape Player Unit (Separate Power Amplifier)
- Radio–Tape Player–CD Player Unit (Separate Power Amplifier)
- Radio–CD Player Unit (Separate Power Amplifier)

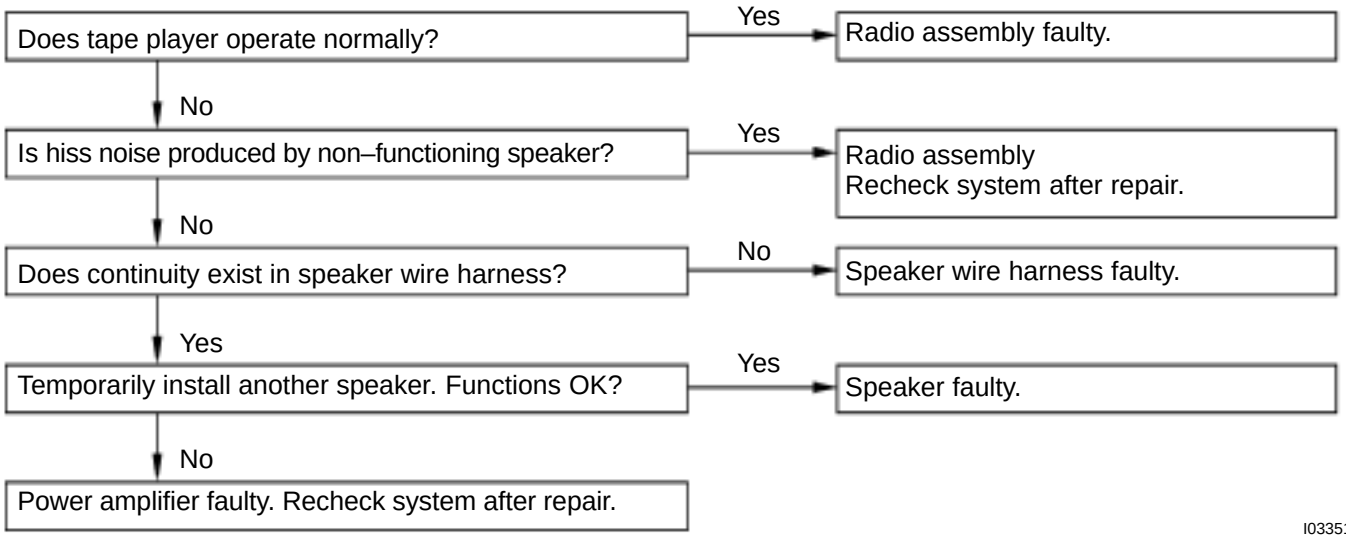

I03351

5	Radio	EITHER AM OR FM DOES NOT WORK, RECEPTION POOR (VOLUME FAINT), FEWER STATION PRESETS

- Radio–Tape Player Unit (Built–in Power Amplifier)
- Radio–CD Player Unit (Built–in Power Amplifier)

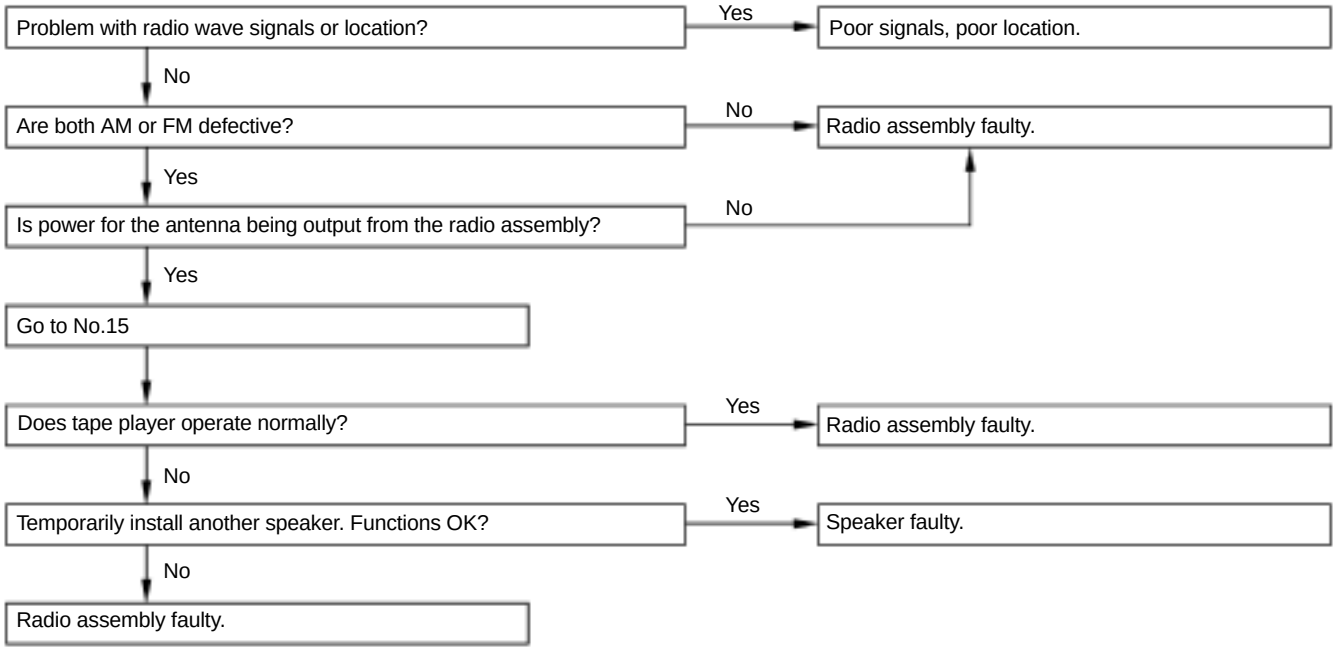

- Radio–Tape Player Unit (Separate Power Amplifier)
- Radio–Tape Player–CD Player Unit (Separate Power Amplifier)
- Radio–CD Player Unit (Separate Power Amplifier)

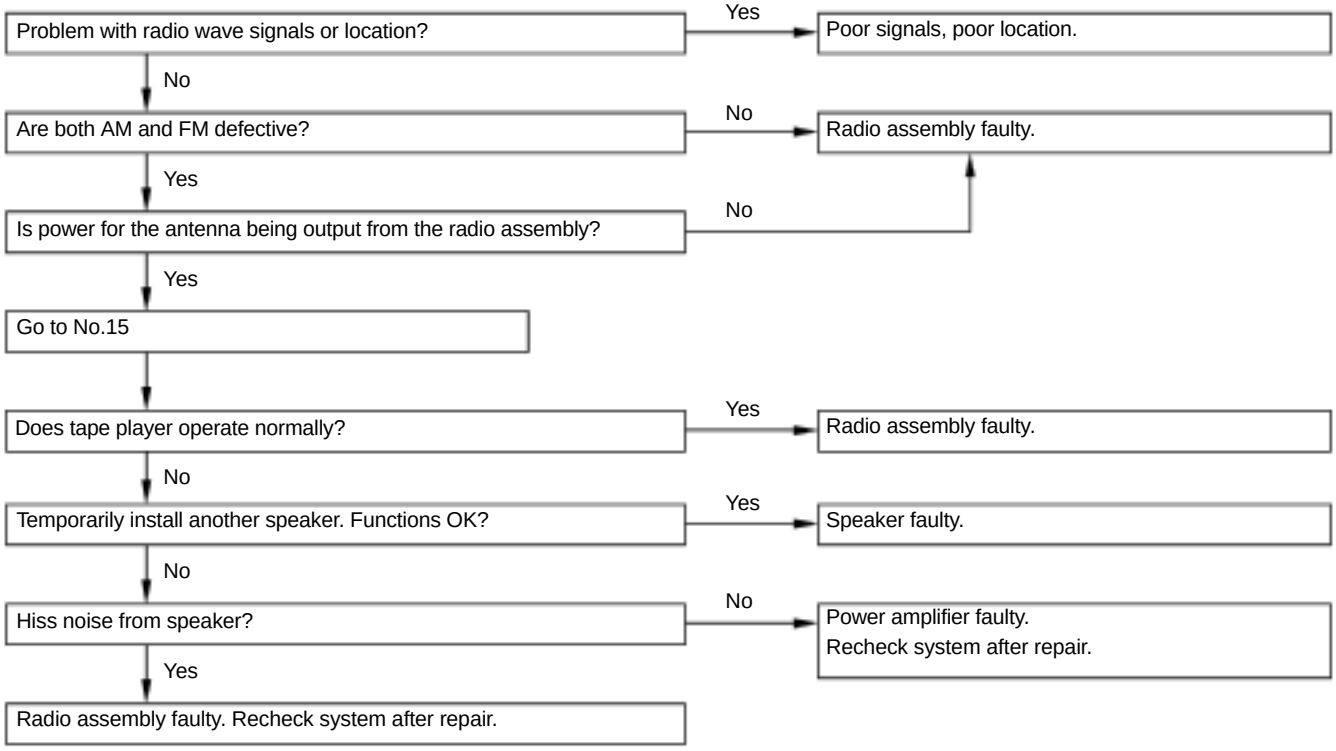

V08242

I03352

6	Radio	POOR RECEPTION

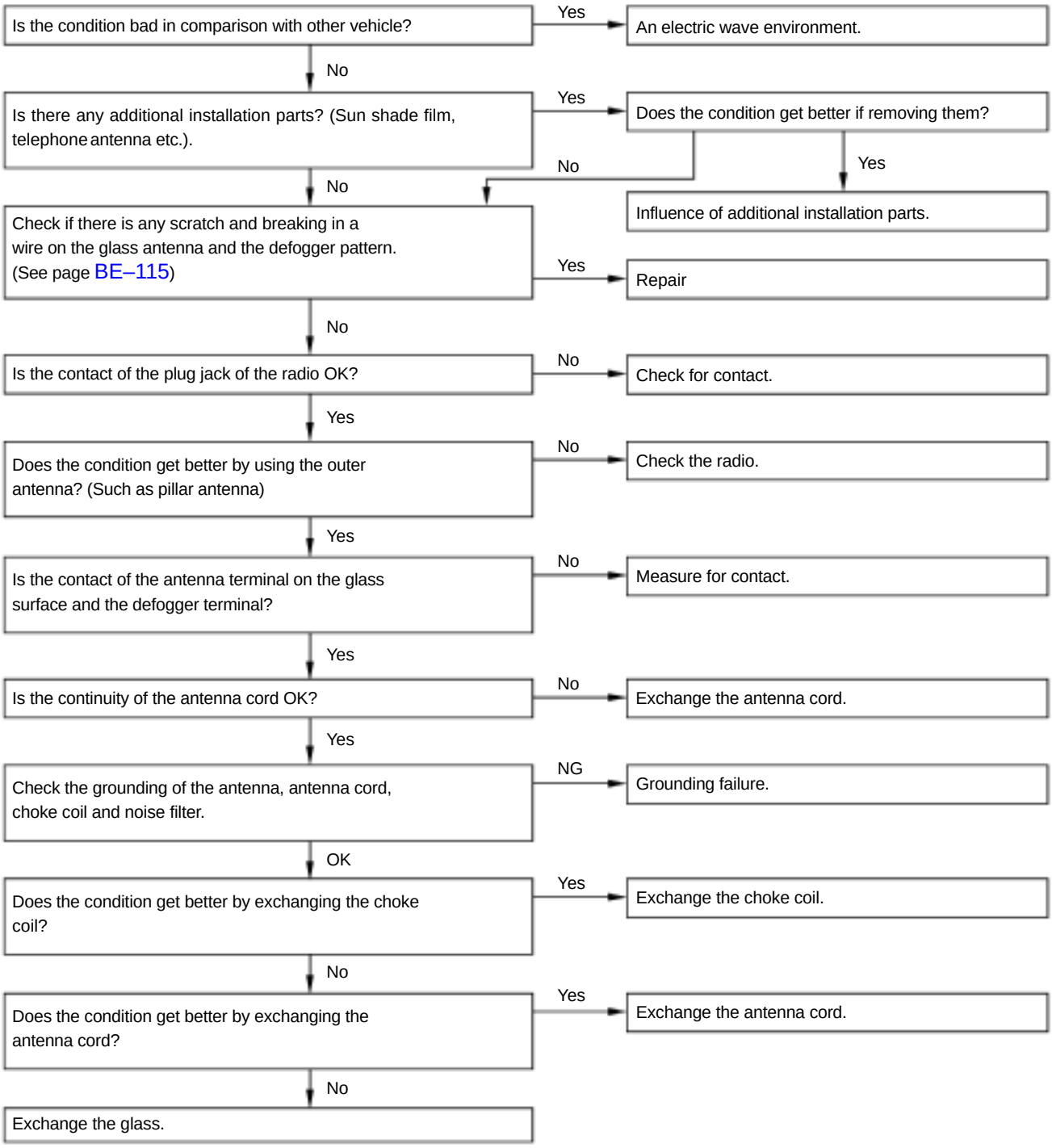

I01472

7	Radio	SOUND QUALITY POOR

- Radio–Tape Player Unit (Built–in Power Amplifier)
- Radio–CD Player Unit (Built–in Power Amplifier)

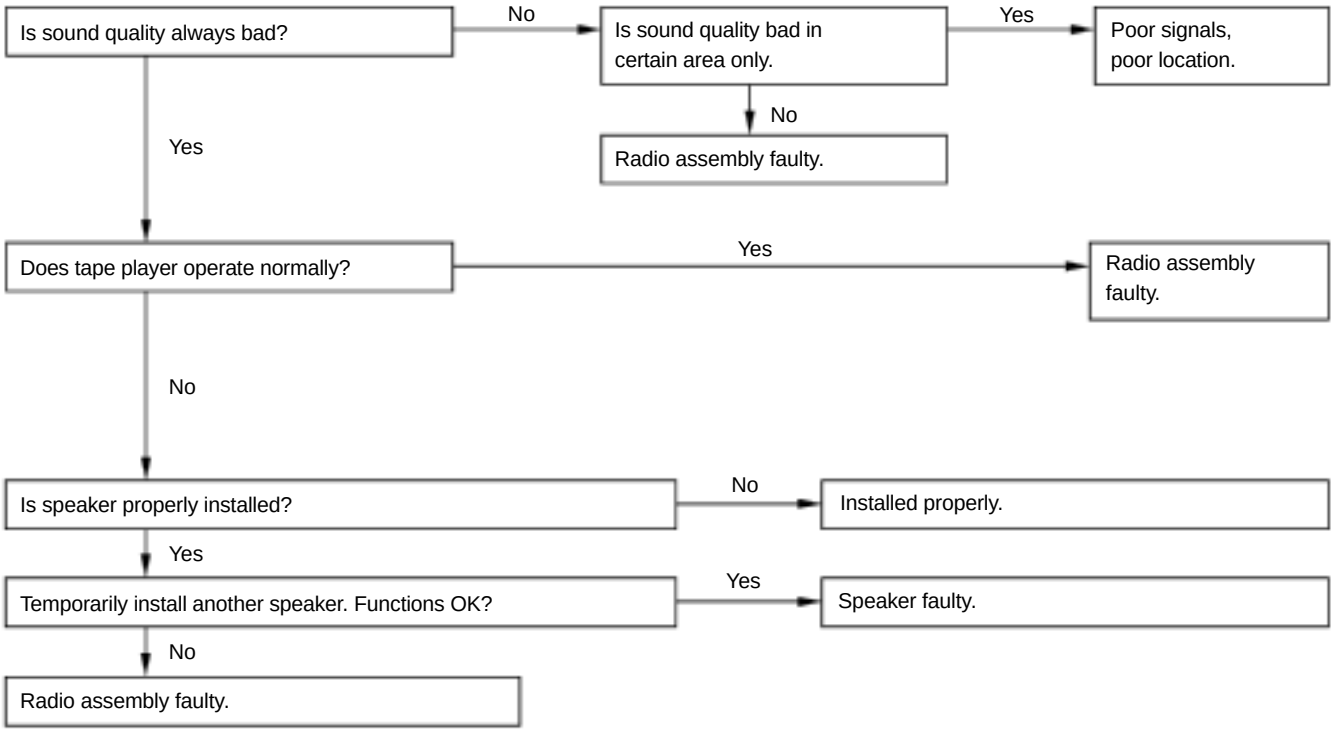

- Radio–Tape Player Unit (Separate Power Amplifier)
- Radio–Tape Player–CD Player Unit (Separate Power amplifier)
- Radio–Tape CD Unit (Separate Power Amplifier)

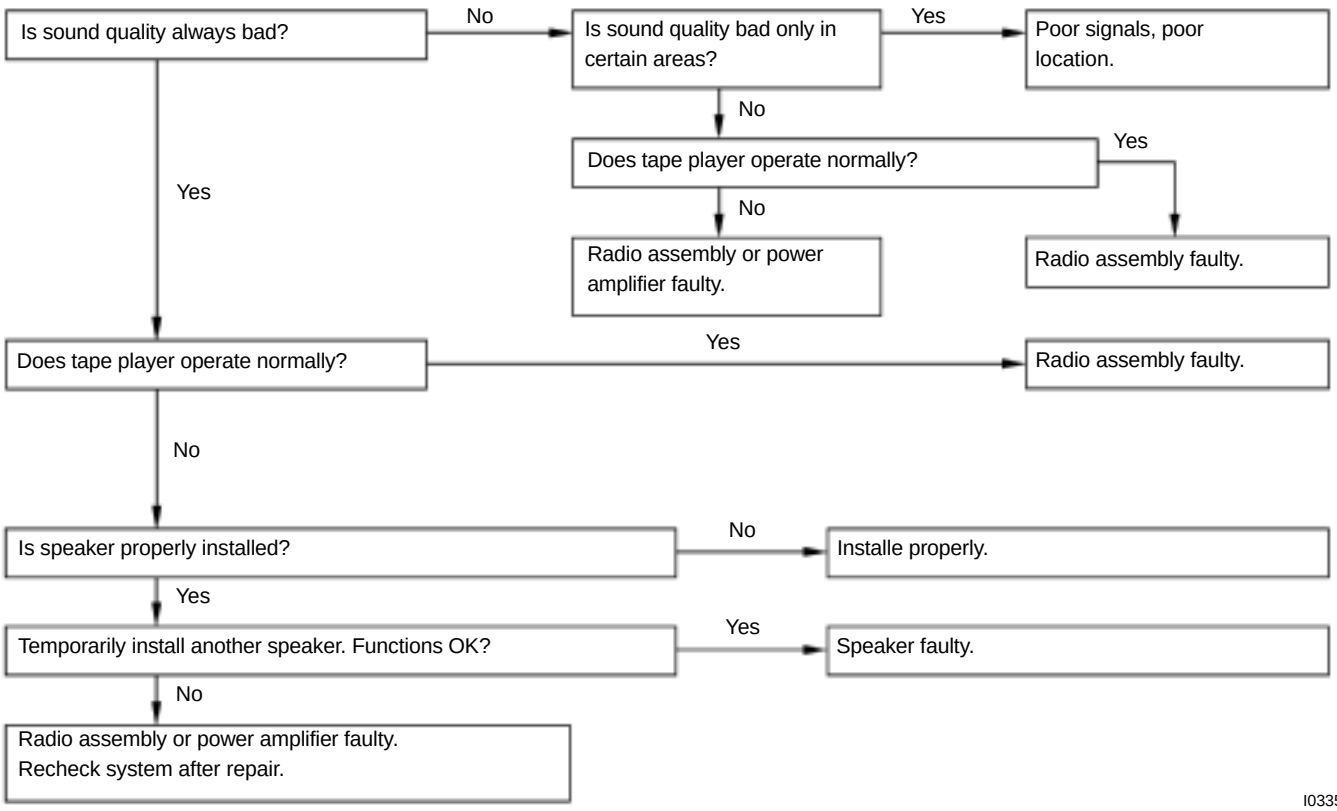

I03353

8	Radio	PRESET MEMORY DISAPPEARS

- Radio–Tape Player Unit (Built–in Power Amplifier)
- Radio–CD Player Unit (Built–in Power Amplifier)

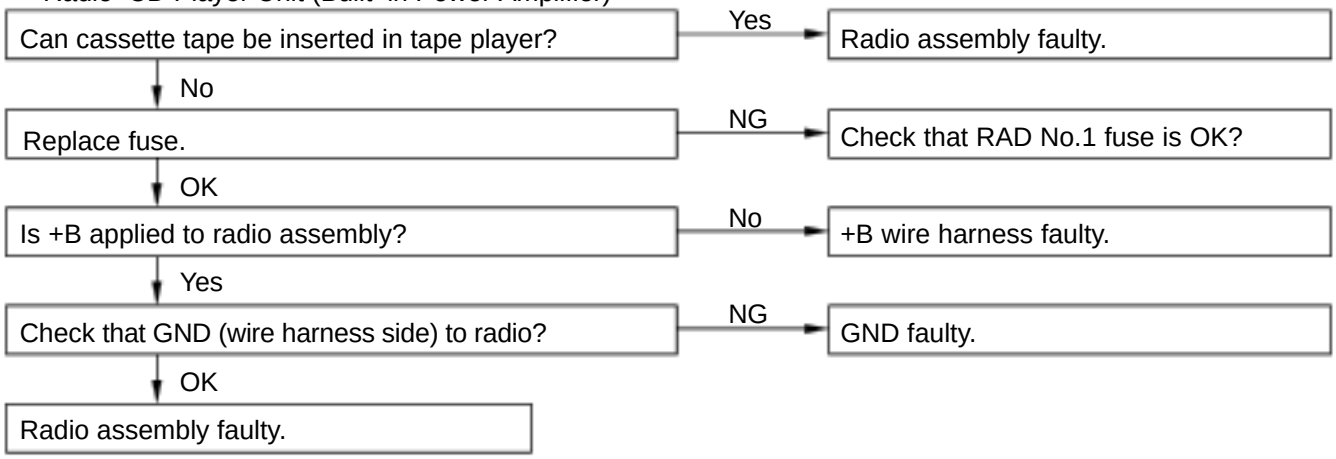

- Radio–Tape Player Unit (Separate Power Amplifier)
- Radio–Tape Player–CD Player Unit (Separate Power Amplifier)
- Radio–CD Player Unit (Separate Power Amplifier)

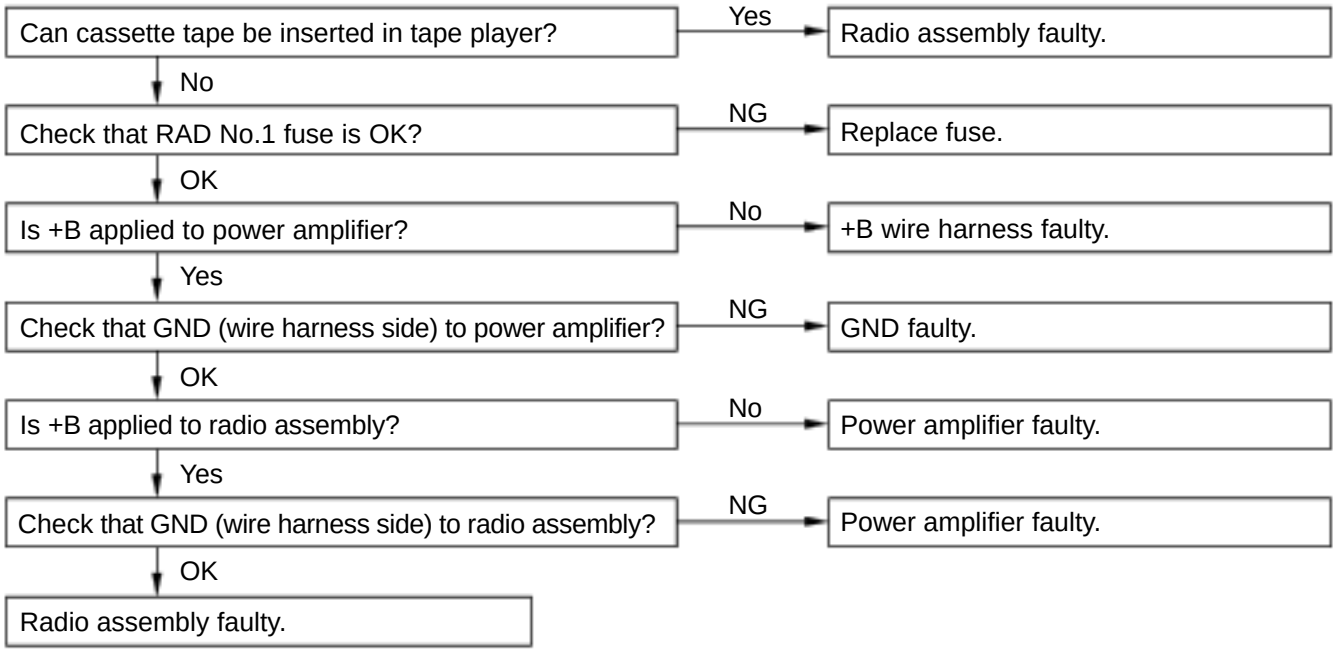

I03354

9	Tape Player	CASSETTE TAPE CANNOT BE INSERTED

● Radio–Tape Player Unit (Built–in Power Amplifier)

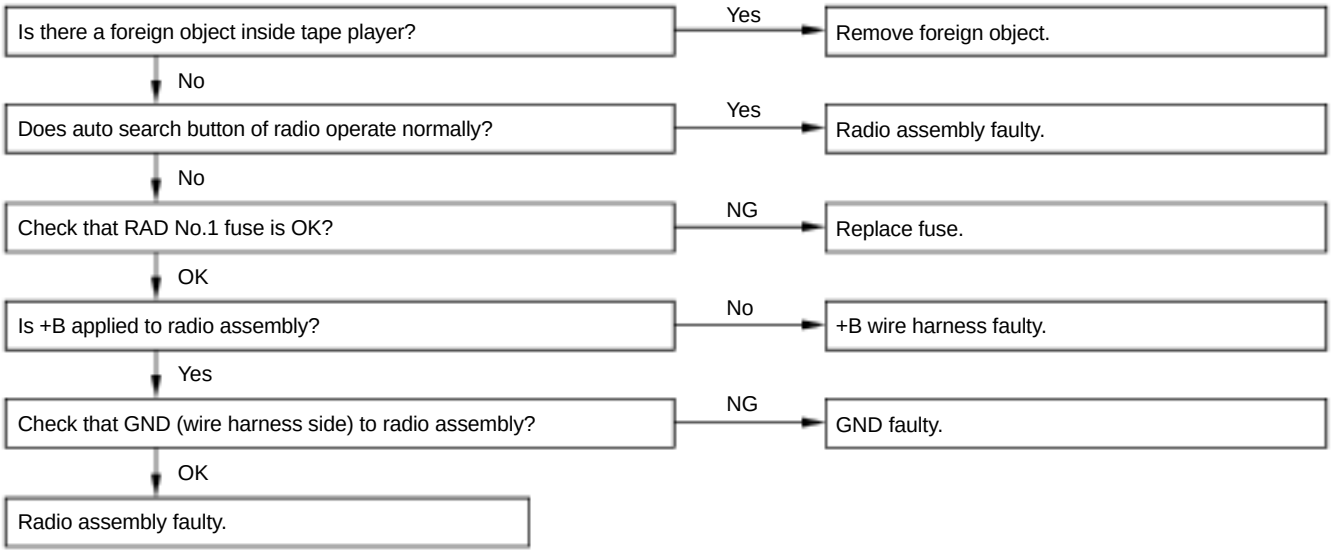

● Radio–Tape Player Unit (Separate Power Amplifier)
● Radio–Tape Player–CD Player Unit (Separate Power Amplifier)

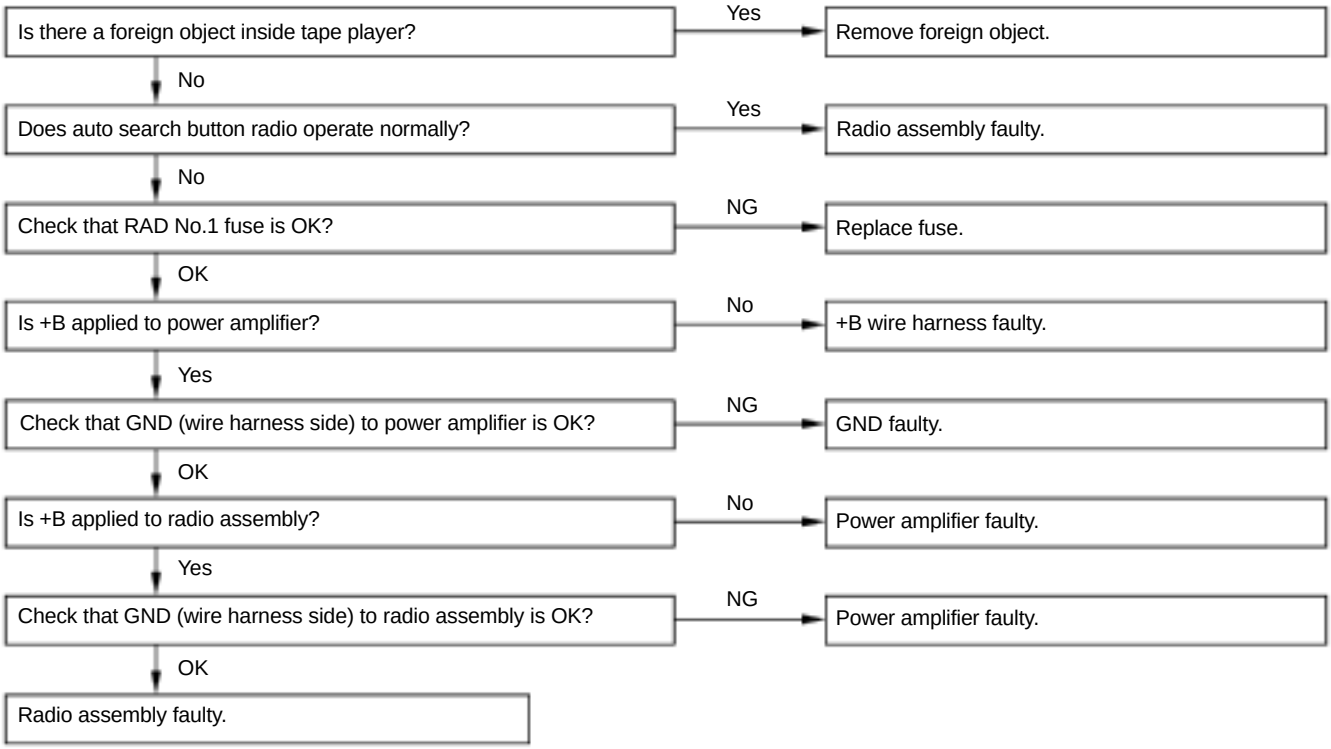

V08246

10	Tape Player	CASSETTE TAPE IS INSERTED, BUT NO POWER

● Radio–Tape Player Unit (Built–in Power Amplifier)

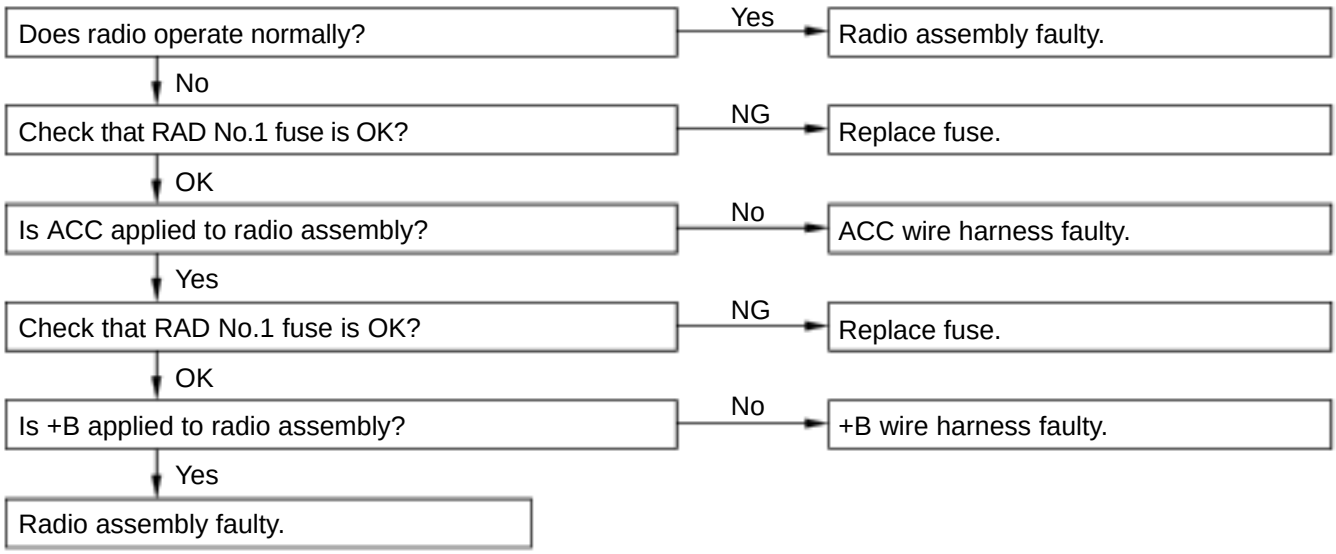

● Radio–Tape Player Unit (Separate Power Amplifier)
● Radio–Tape Player–CD Player Unit (Separate Power Amplifier)

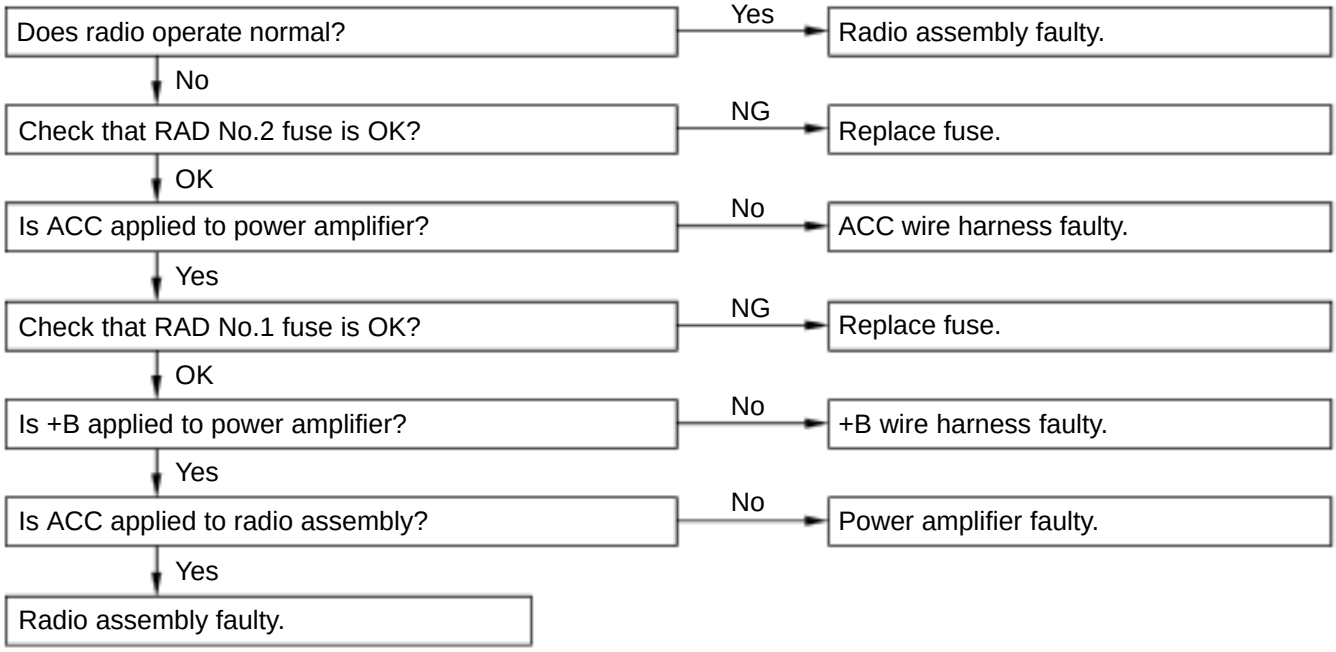

V08247

11	Tape Player	POWER COMING IN, BUT TAPE PLAYER NOT OPERATING

- Radio–Tape Player Unit (Built–in Power Amplifier)

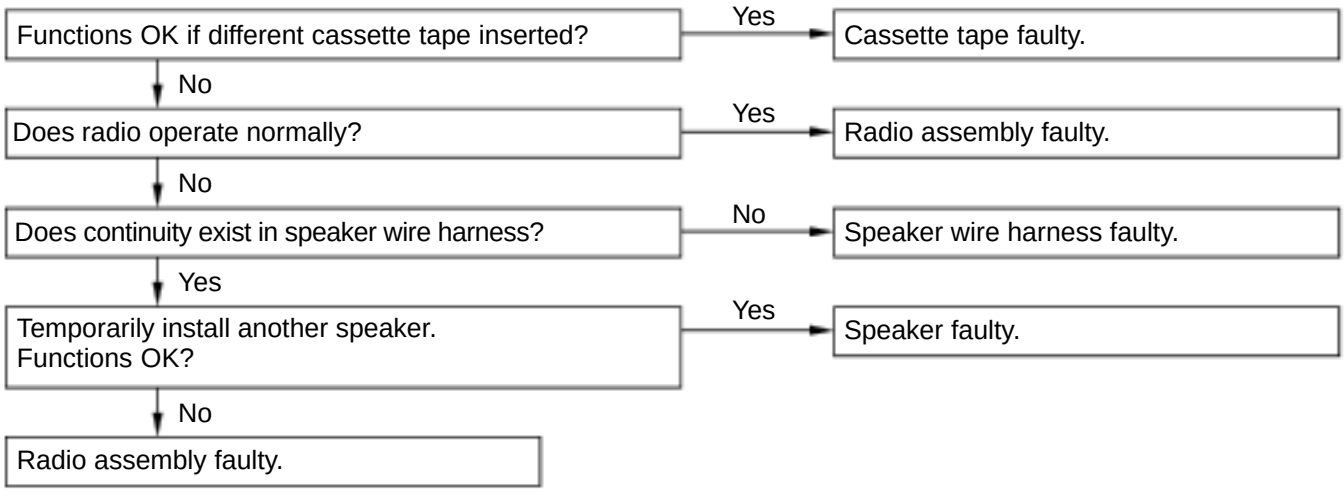

- Radio–Tape Player Unit (Separate Power Amplifier)
- Radio–Tape Player–CD Player Unit (Separate Power Amplifier)

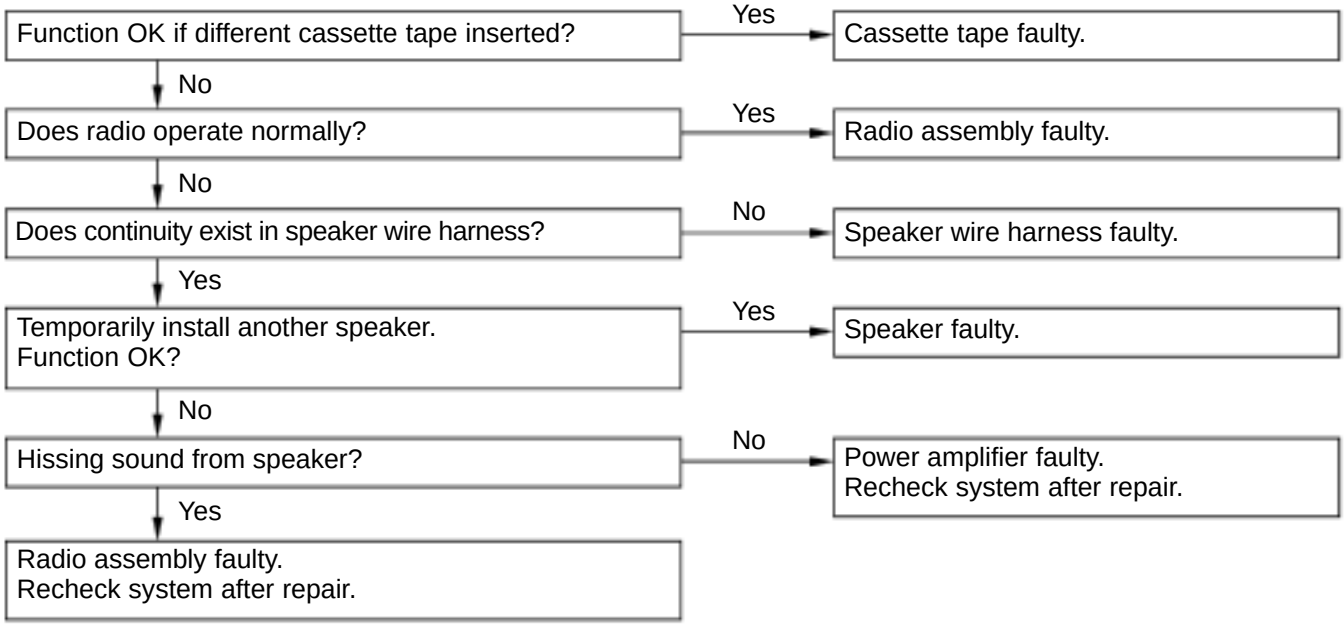

V08248

12	Tape Player	EITHER SPEAKER DOES NOT WORK

- Radio–Tape Player Unit (Built–in Power Amplifier)

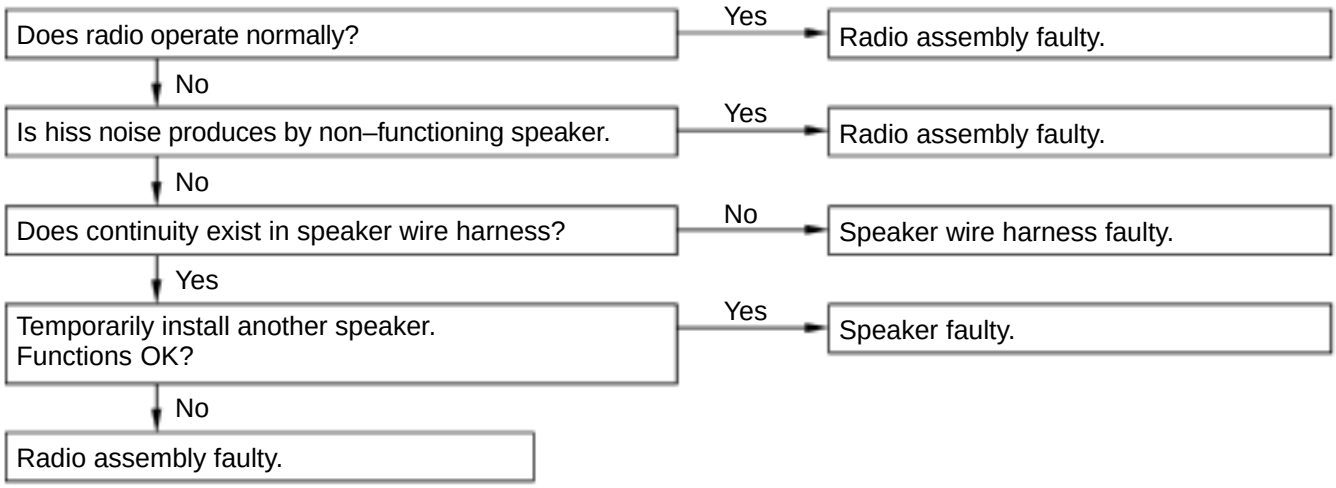

- Radio–Tape Player Unit (Separate Power Amplifier)
- Radio–Tape Player–CD Player Unit (Separate Power Amplifier)

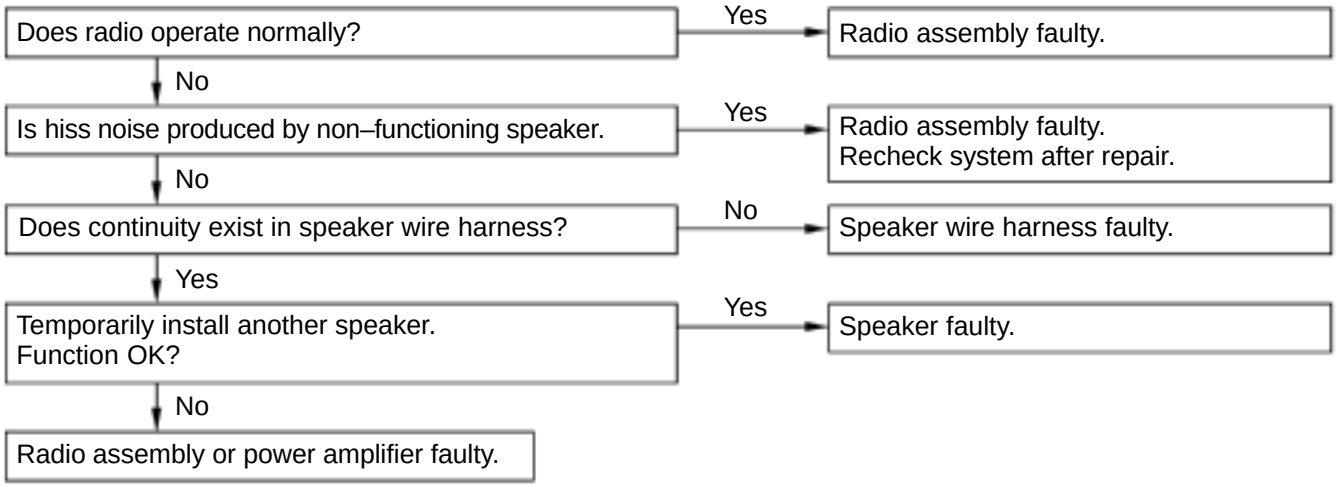

V08249

13	Tape Player	SOUND QUALITY POOR (VOLUME FAINT)

- Radio–Tape Player Unit (Built–in Power Amplifier)

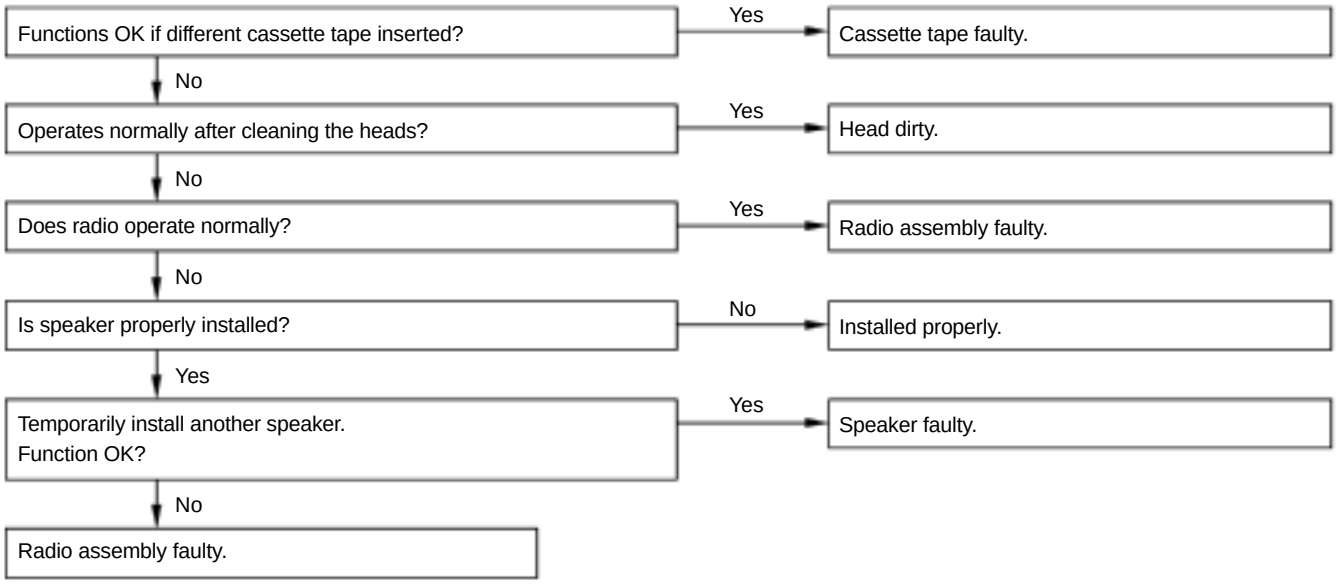

- Radio–Tape Player Unit (Separate Power Amplifier)
- Radio–Tape Player–CD Player Unit (Separate Power Amplifier)

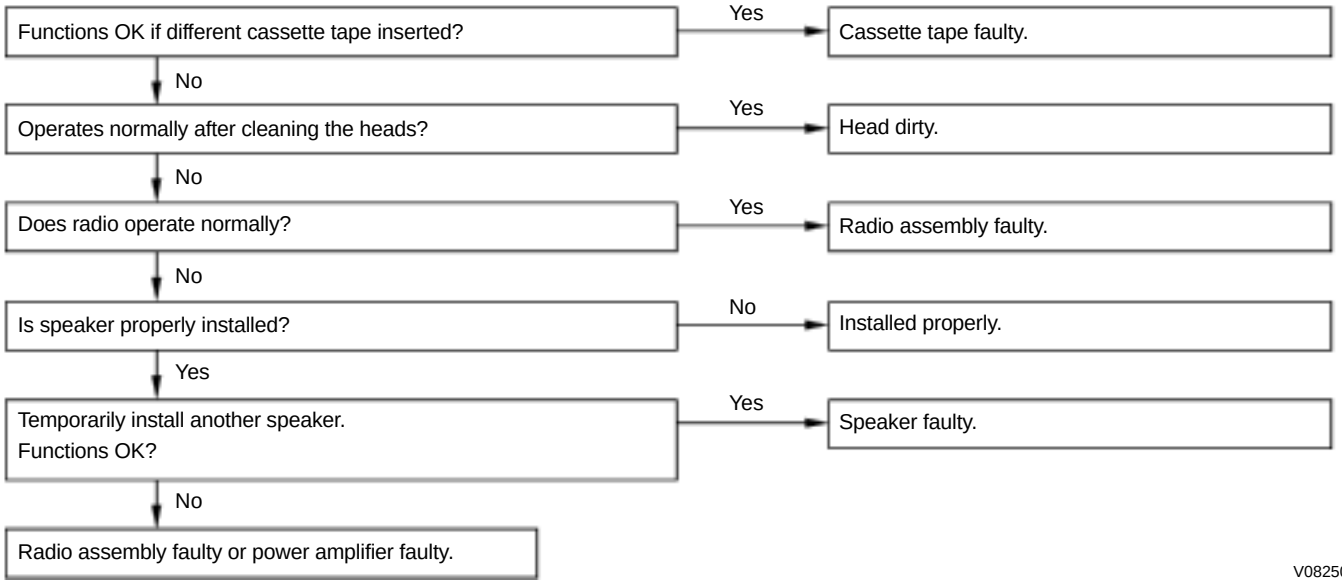

V08250

14 Tape Player — TAPE JAMMED, MALFUNCTION WITH TAPE SPEED OR AUTO–REVERSE

Function OK if different tape (less than 120 mints.) inserted?
- Yes → Cassette tape faulty.
- No ↓

Is there a foreign object inside tape player?
- Yes → Remove foreign object.
- No ↓

Operates normally after cleaning the heads?
- Yes → Head dirty.
- No ↓

Radio assembly faulty.

15 Tape Player — CASSETTE TAPE WILL NOT BE EJECTED

- Radio–Tape Player Unit (Built–in Power Amplifier)

Does tape player operate normally?
- No → Cassette tape jammed.
- Yes ↓

Is auto search button of radio operating normally?
- Yes → Radio assembly faulty.
- No ↓

Check that RAD No.1 fuse is OK?
- NG → Replace fuse.
- OK ↓

Is +B applied to radio assembly?
- No → +B wire harness faulty.
- Yes ↓

Radio assembly faulty.

- Radio–Tape Player Unit (Separate Power Amplifier)
- Radio–Tape Player–CD Player Unit (Separate Power Amplifier)

Does tape player operate normally?
- No → Cassette tape jammed.
- Yes ↓

Is auto search button of radio operating normally?
- Yes → Radio assembly faulty.
- No ↓

Check that RAD No.1 fuse is OK?
- NG → Replace fuse.
- OK ↓

Is +B applied to power amplifier?
- No → +B wire harness faulty.
- Yes ↓

Is +B applied to radio assembly?
- No → Power amplifier faulty.
- Yes ↓

Radio assembly faulty.

V08251

16	CD Player	CD CANNOT BE INSERTED

- Radio–CD Player Unit (Built–in Power Amplifier)
- Radio–CD Player Unit (Separate Power Amplifier)
- Radio–Tape Player – CD Player (Separate Power Amplifier)

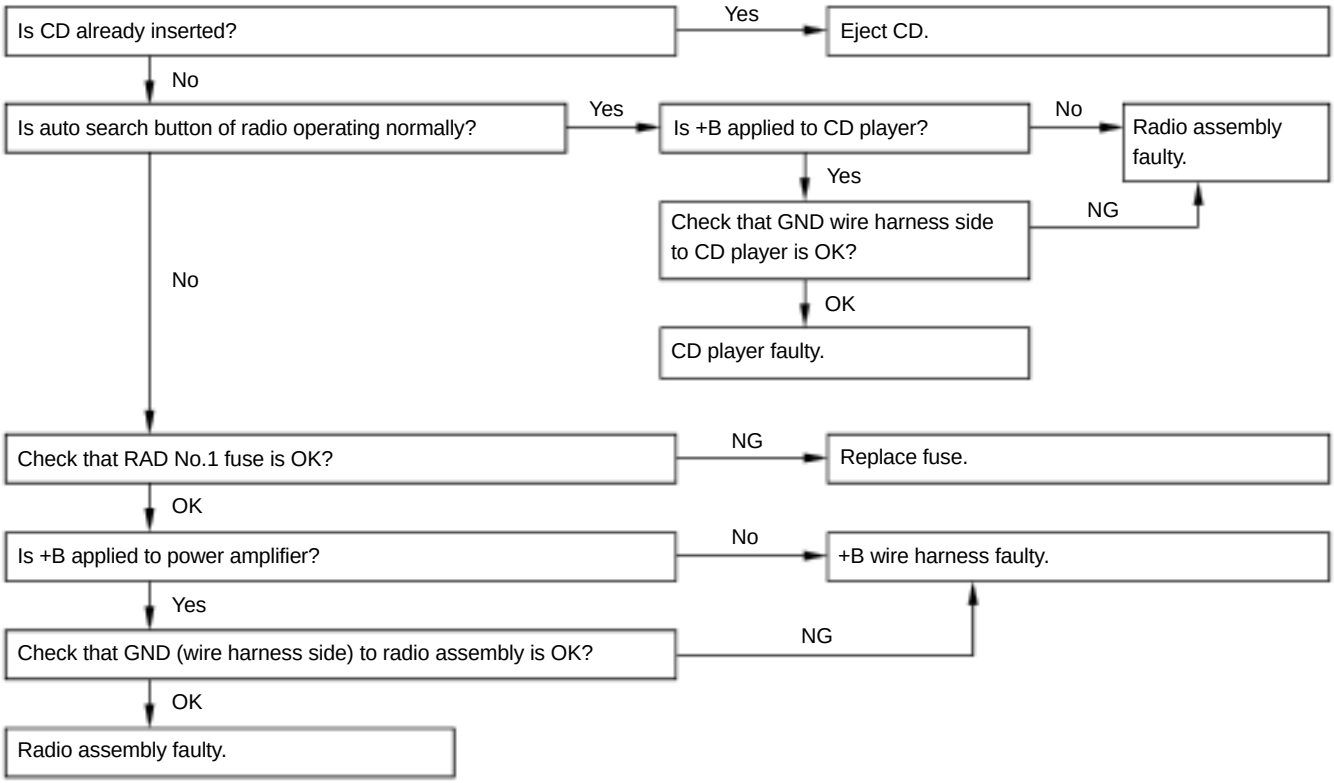

17	CD Player	CD INSERTED, BUT NO POWER

- Radio–CD Player Unit (Built–in Power Amplifier)
- Radio–CD Player Unit (Separate Power Amplifier)
- Radio–Tape Player – CD Player (Separate Power Amplifier)

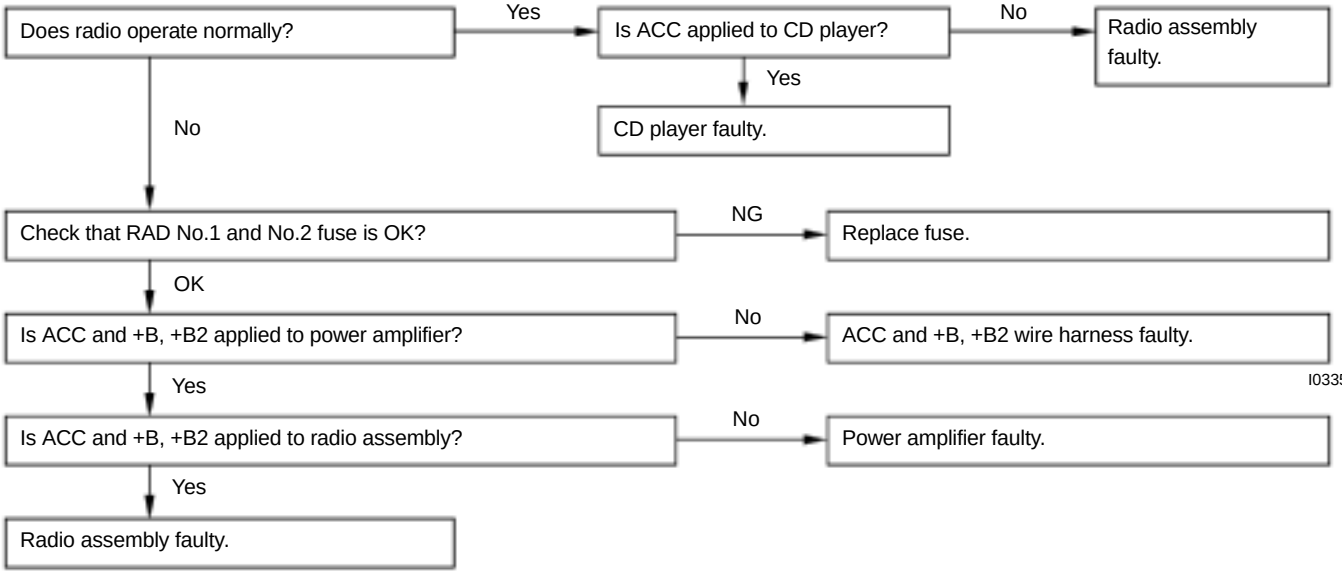

I03355

I03355

18	CD Player	POWER COMING IN, BUT CD PLAYER NOT OPERATING

- Radio–CD Player Unit (Built–in Power Amplifier)
- Radio–CD Player Unit (Separate Power Amplifier)
- Radio–Tape Player – CD Player (Separate Power Amplifier)

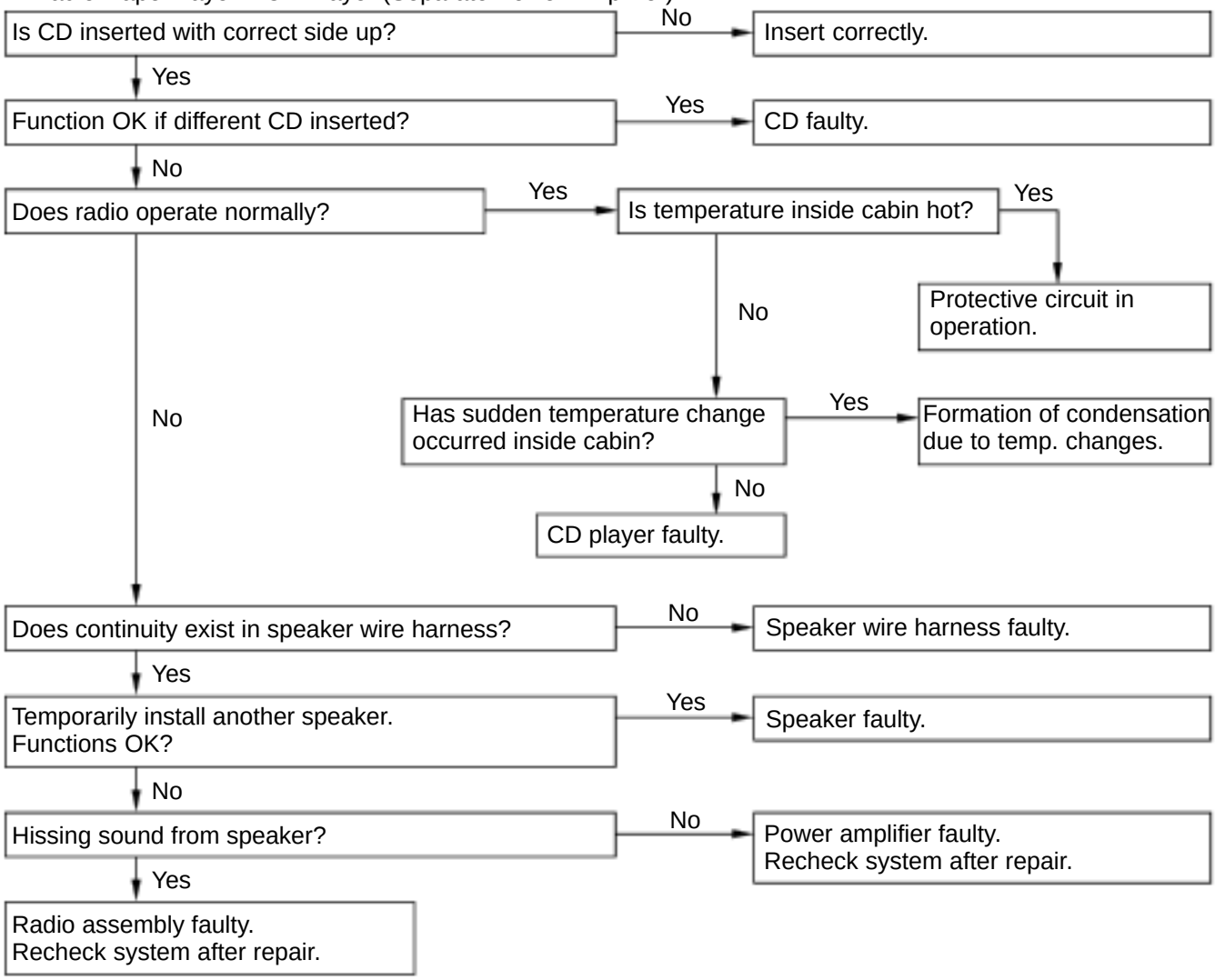

I03356

19	CD Player	SOUND JUMPS

- Radio–CD Player Unit (Built–in Power Amplifier)
- Radio–CD Player Unit (Separate Power Amplifier)
- Radio–Tape Player – CD Player (Separate Power Amplifier)

Does sound jump only during strong vibration? — Yes → Jumping caused by vibration.

No ↓

Is CD player properly installed? — No → Installed properly.

Yes ↓

Functions OK if different CD inserted? — Yes → CD faulty.

No ↓

Has sudden temperature change occurred inside cabin? — Yes → Formation of condensation due to temp. changes.

No ↓

CD player faulty.

20	CD Player	SOUND QUALITY POOR (VOLUME FAINT)

- Radio–CD Player Unit (Built–in Power Amplifier)
- Radio–CD Player Unit (Separate Power Amplifier)
- Radio–Tape Player – CD Player (Separate Power Amplifier)

Functions OK if different CD inserted? — Yes → CD faulty.

No ↓

Does radio operate normally? — Yes → CD player faulty.

No ↓

Is speaker properly installed? — No → Installed properly.

Yes ↓

Temporarily install another speaker. Functions OK? — Yes → Speaker faulty.

No ↓

Radio assembly or CD player or Power amplifier faulty.

I03357

21	CD Player	EITHER SPEAKER DOES NOT WORK

- Radio–CD Player Unit (Built–in Power Amplifier)
- Radio–CD Player Unit (Separate Power Amplifier)
- Radio–Tape Player – CD Player (Separate Power Amplifier)

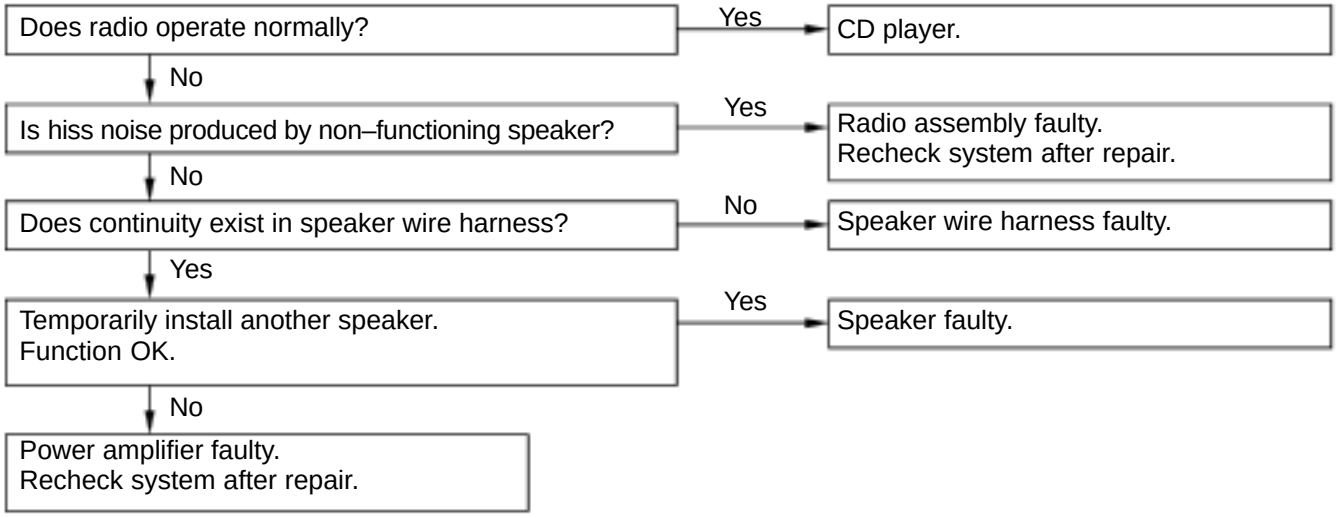

22	CD Player	CD WILL NOT BE EJECTED

- Radio–CD Player Unit (Built–in Power Amplifier)
- Radio–CD Player Unit (Separate Power Amplifier)
- Radio–Tape Player – CD Player (Separate Power Amplifier)

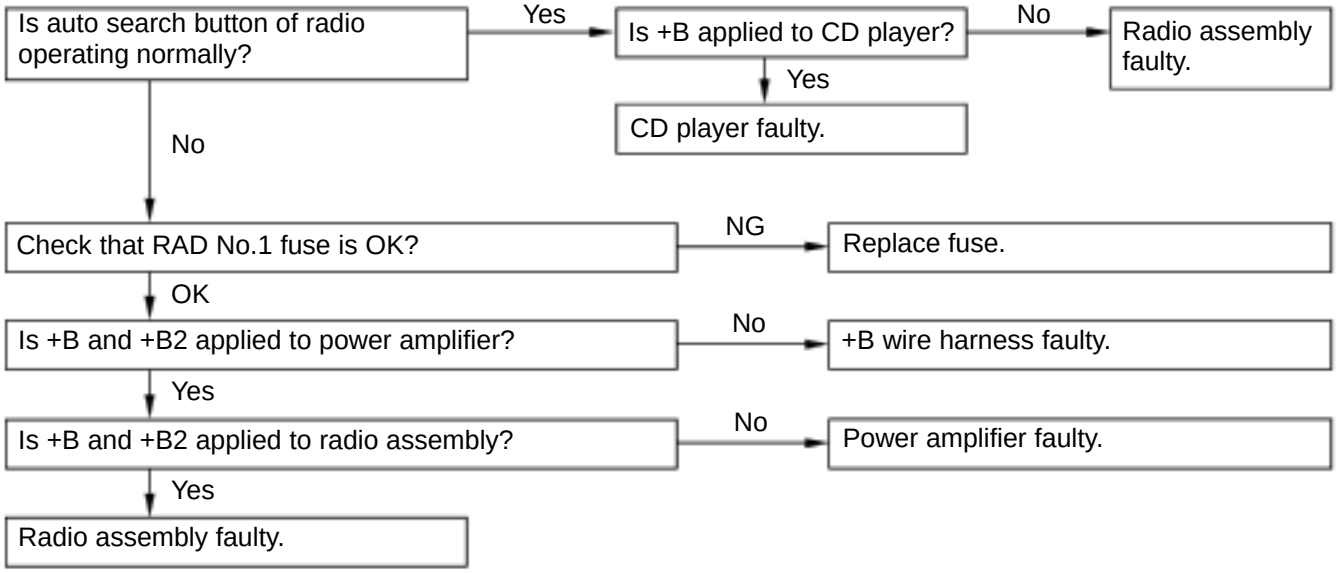

I03358

23	Noise	NOISE OCCURS

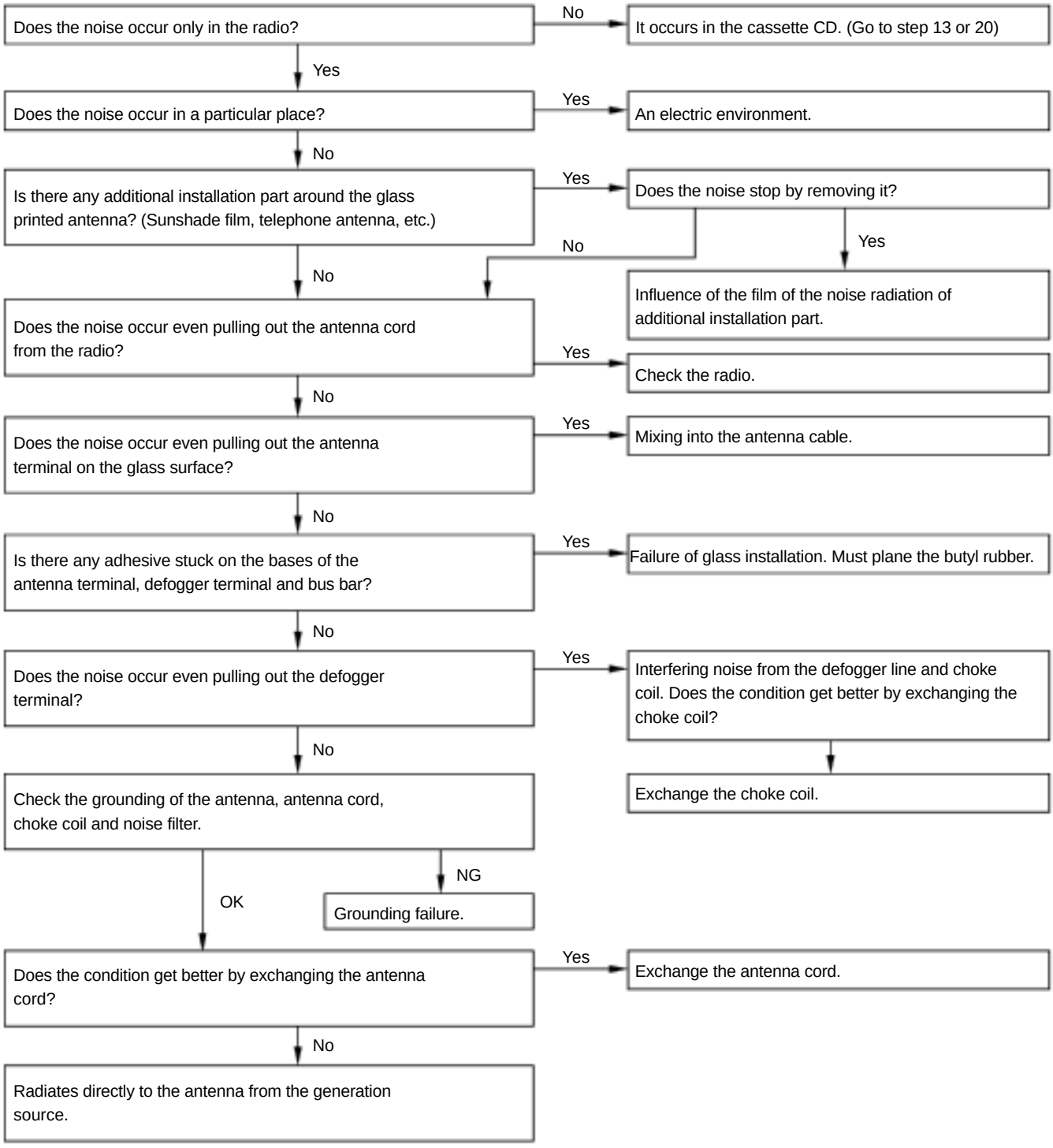

I01473

24	Noise	NOISE PRODUCED BY VIBRATION OR SHOCK WHILE DRIVING

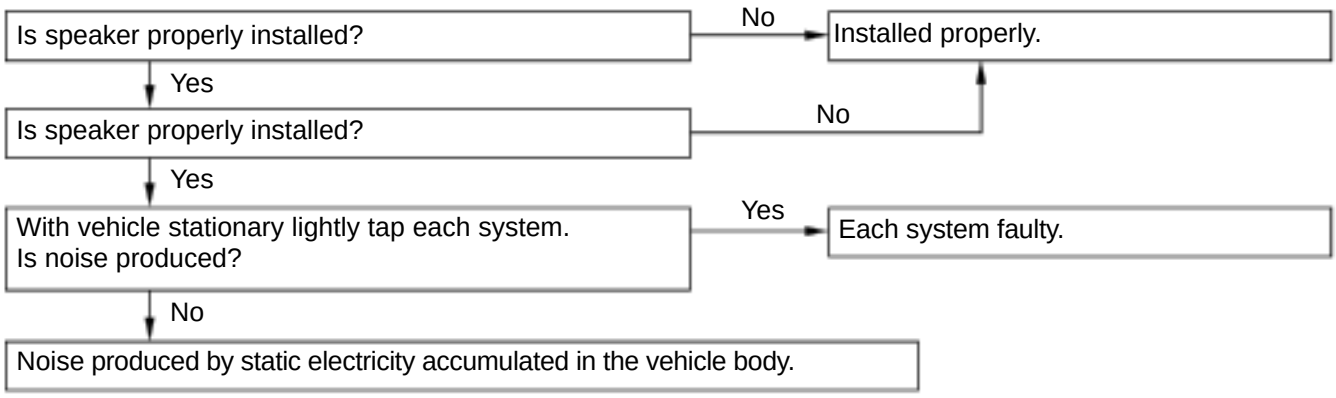

I01474

25	Noise	NOISE PRODUCED WHEN ENGINE STARTS

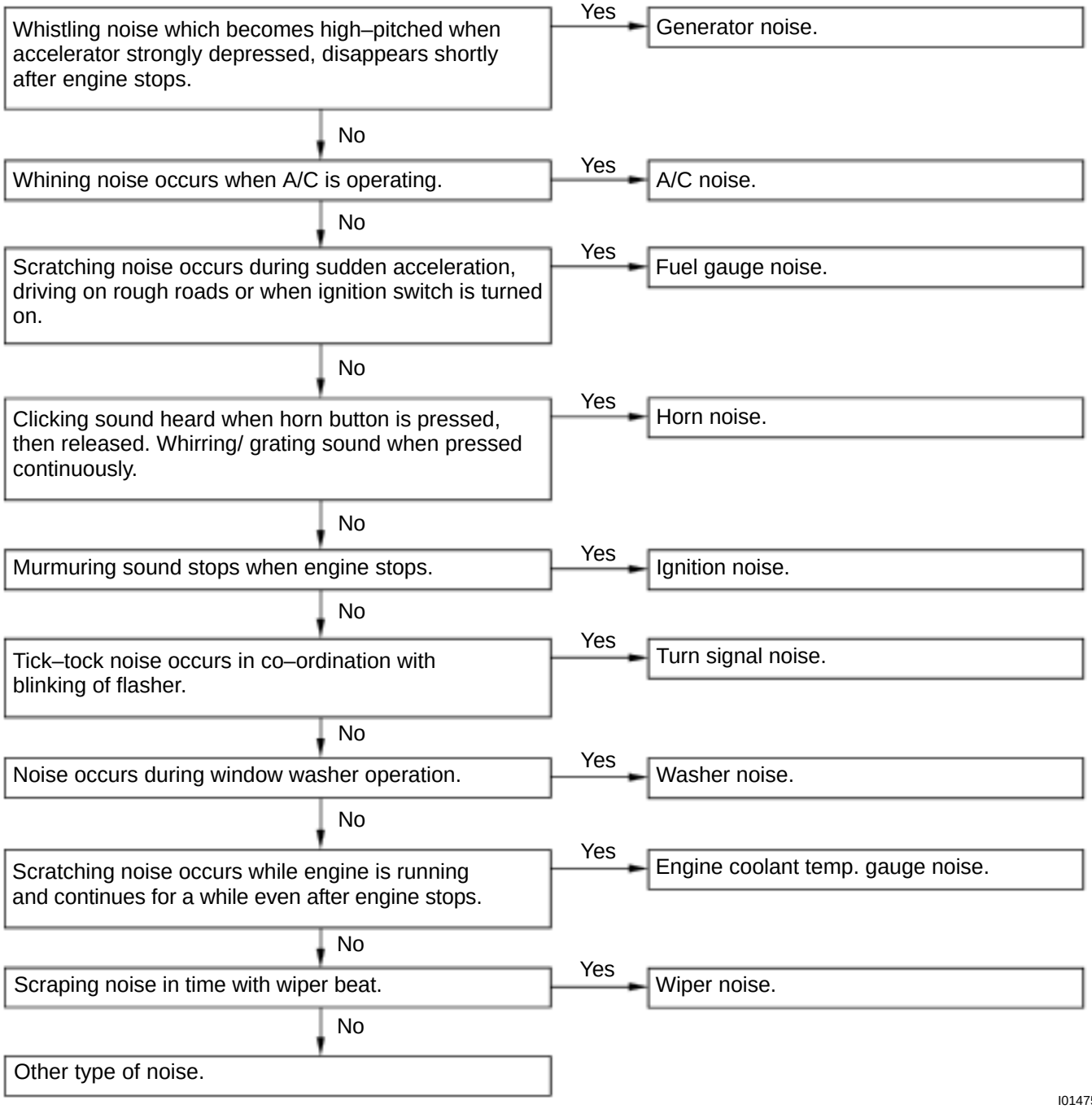

I01475

BE0AZ–05

LOCATION

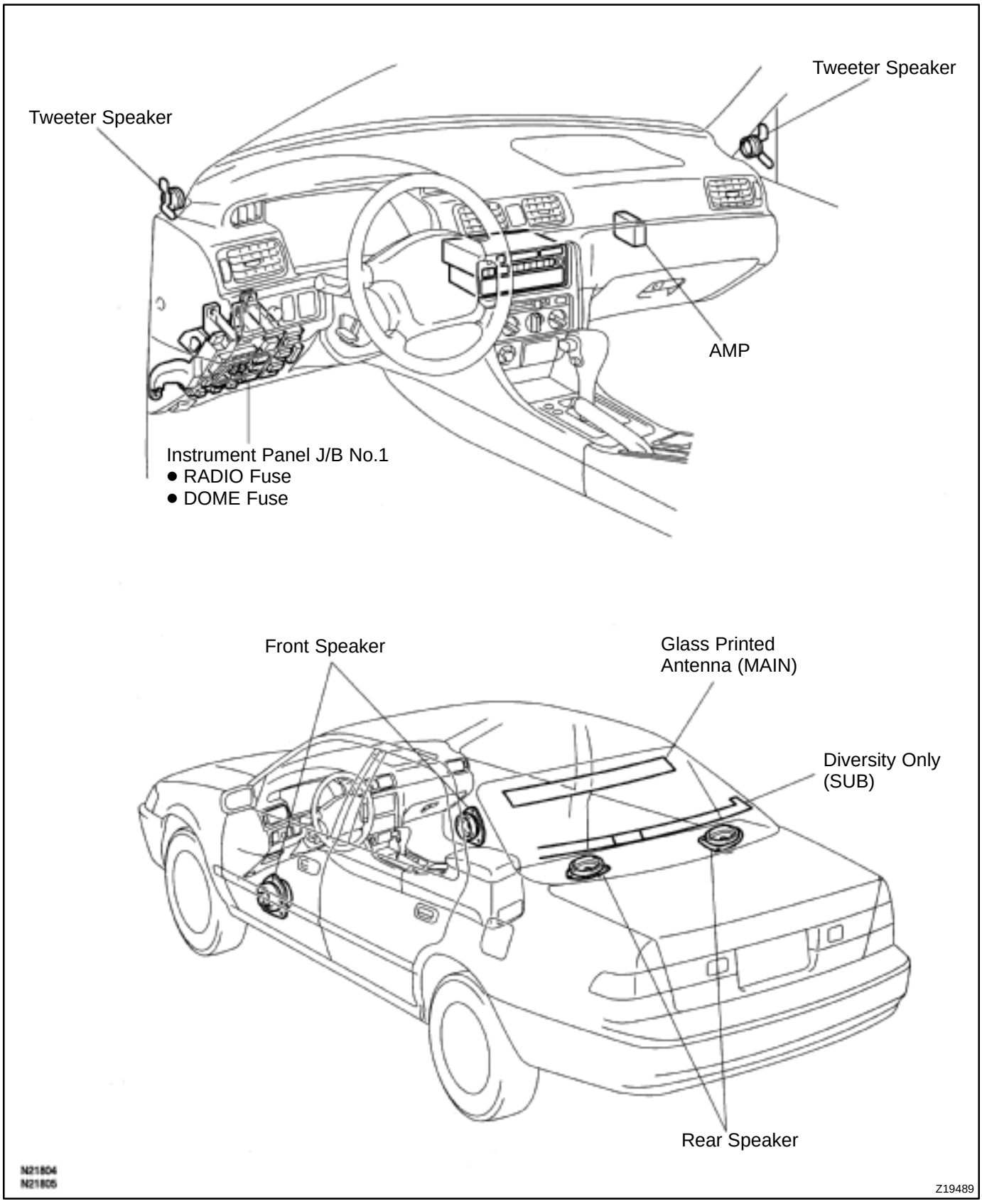

BE0B0–06

INSPECTION

1. GLASS PRINTED ANTENNA INSPECTION PROCEDURE

NOTICE:

- **When cleaning the glass, use soft dry cloth, and wipe the glass in the direction of the wire.**
  Take care not to damage the wires.
- **Do not use detergents or glass cleaners with abrasive ingredients.**

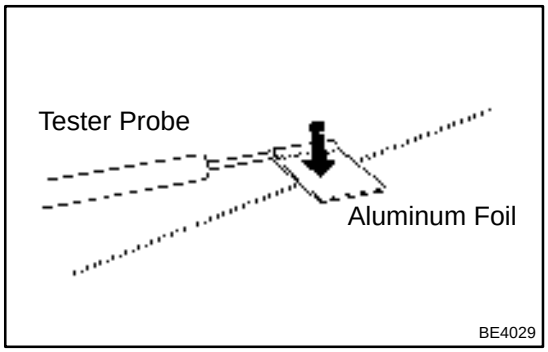

NOTICE:
In order not to damage the glass printed antenna, wrap up the tip of the tester stick with aluminum foil as shown in the illustration and check by holding the aluminum foil with a finger.

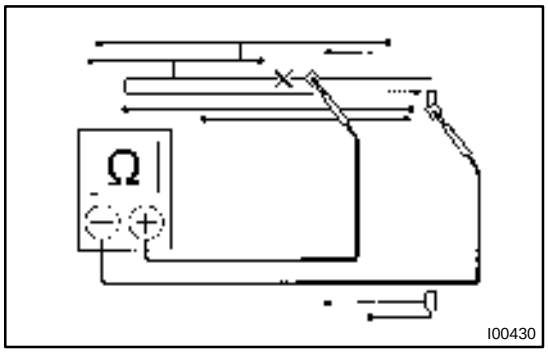

By placing and moving the tester stick along the glass printed antenna, check if continuity exists.

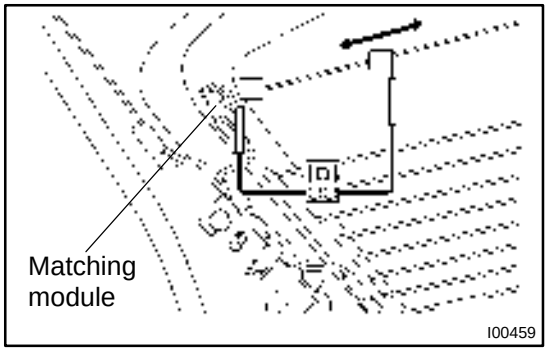

HINT:
Matching module is built in the bus bar of the glass printed antenna (main terminal side) of CAMRY and no continuity exists between the terminal and the antenna. Therefore, for the continuity checking of the glass printed antenna on the main antenna side of CAMRY, place one probe of the tester on the position beside the bus bar (position shown in the illustration) and check by making the other probe of the tester move along.

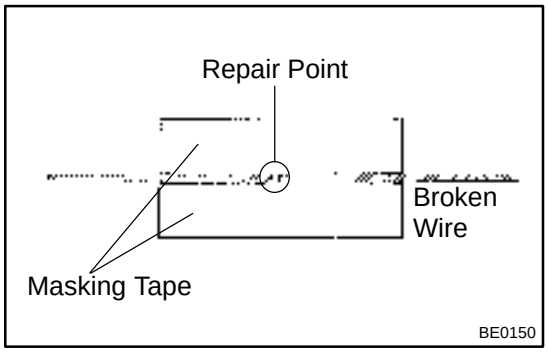

2. GLASS PRINTED ANTENNA REPAIR PROCEDURE

(a) Clean the broken wire tips with grease, wax and silicone remover.
(b) Place the masking tape along both sides of the wire for repair.
(c) Thoroughly mix the repair agent (Dupont paste No. 4817).

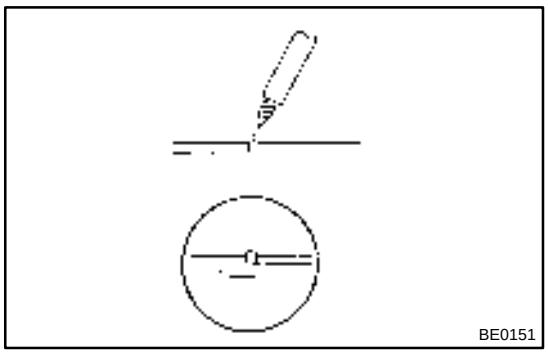

(d) Using a fine tip brush, apply a small amount of the agent to the wire.
(e) After a few minutes, remove the masking tape.

CLOCK

BE0B1–02

TROUBLESHOOTING

HINT:

Troubleshoot the clock according to the table below.

Clock will not operate	1
Clock loses or gains time	2

± 1.5 seconds / day

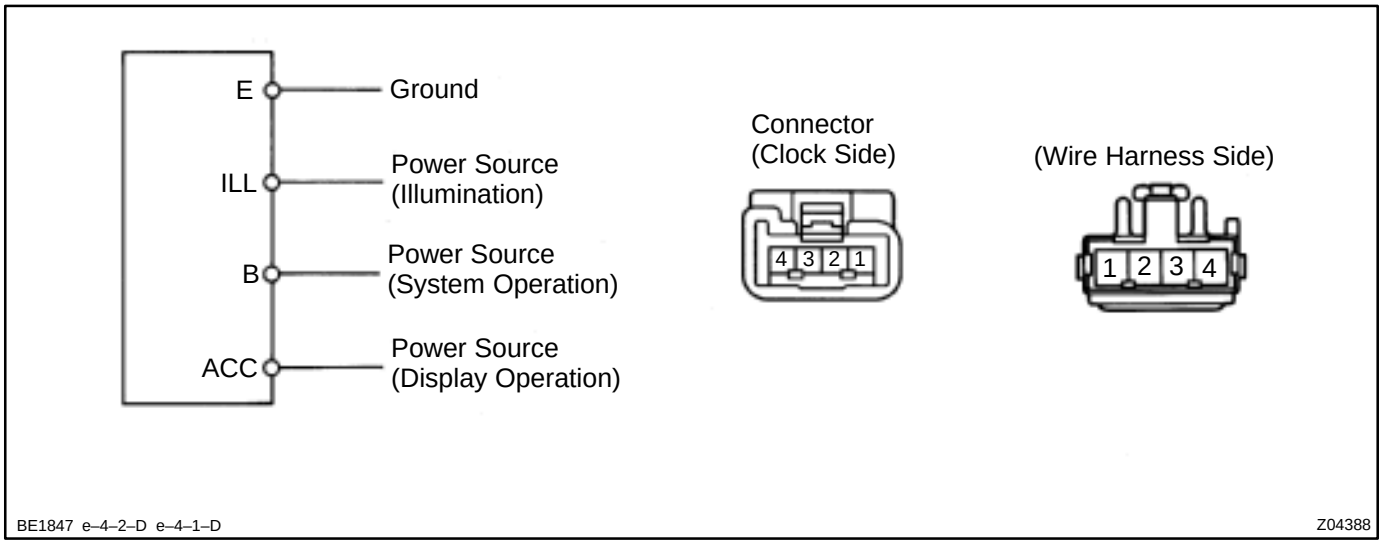

1	CLOCK WILL NOT OPERATE

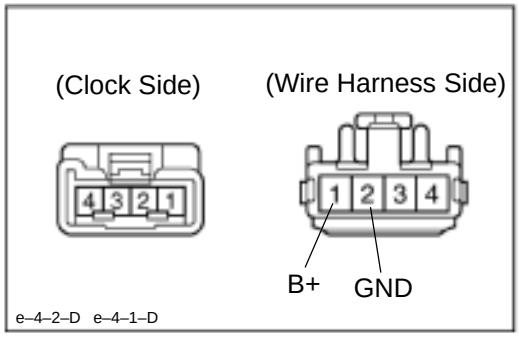

(a) Check that the battery positive voltage is 10 – 16 V.
If voltage is not as specified, replace the battery.

(b) Check that the DOME fuse is not blown.
If the fuse is blown, replace the fuse and check for short circuit.

(c) Troubleshoot the clock as follows.
HINT: Inspect the connector on the wire harness side.

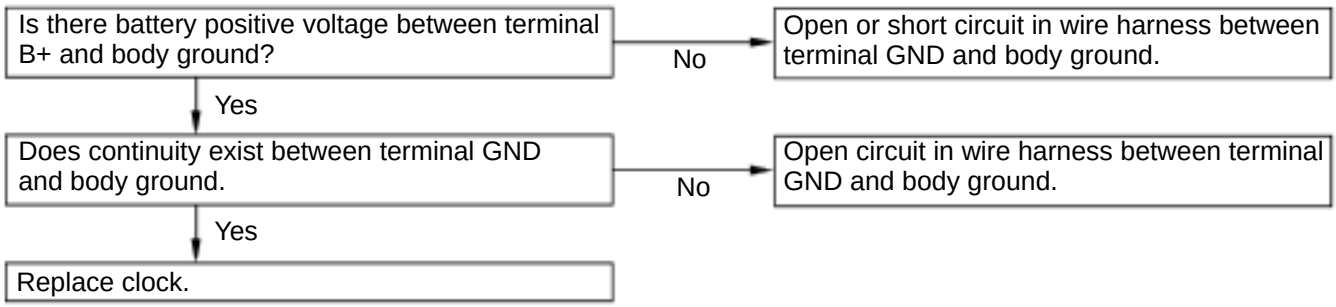

V04421

2	CLOCK LOSES OR GAINS TIME

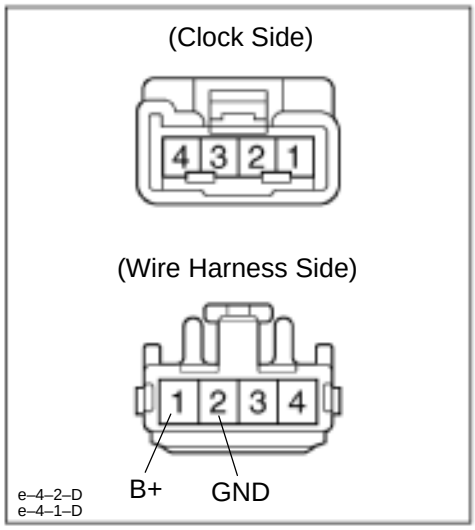

(a) Check that the battery positive voltage is 10 – 16 V.

If voltage is not as specified, replace the battery.

(b) Inspect the error of the clock.
Allowable error (per day): ± 1.5 seconds

If the error exceeds the allowable error, replace the clock.

(c) Check that the clock adjusting button is caught in position, and does not return.

If the button is not returned, repair or replace the clock.

(d) Troubleshoot the clock as follows.

HINT: Inspect the connector on the wire harness side.

Is there 10 – 16 V between terminal B+ and body ground?

Below 10 V → Locate cause and repair, or recharge battery.

Yes → Adjust or replace clock.

V04422

ENGINE IMMOBILISER SYSTEM

BE0B2–06

REGISTRATION PROCEDURE

1. KEY REGISTRATION IN AUTOMATIC REGISTRATION MODE

(a) Registration of a new transponder key.

HINT:

- This must be done when you have installed a new ECM.
- The new ECM is in the automatic key code registration mode. The already fixed number of key codes for this ECM can be registered.
  On this type of vehicle, up to 4 key codes can be registered.
- In the automatic registration mode, the last key registered becomes sub–key.

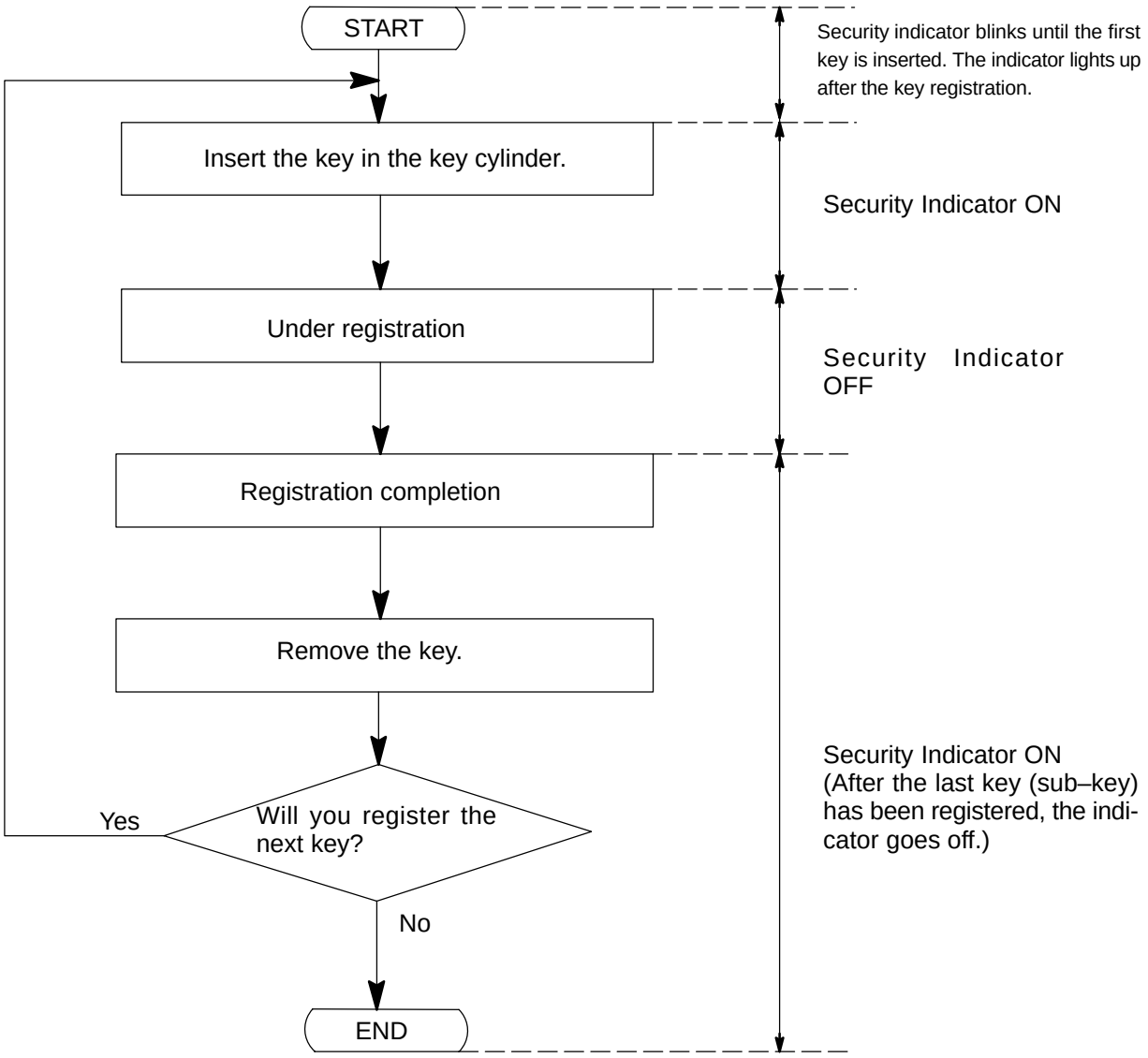

HINT:

- When a key is not inserted in the key cylinder in the automatic registration mode, the security indicator always lights on.
- When the immobiliser system operations normally and the key is pull out, the security indicator blinks.
- When key code registration could not be performed in the automatic registration mode, code 2–1 is output from the security indicator and when inserting the already registered key, code 2–2 is output.

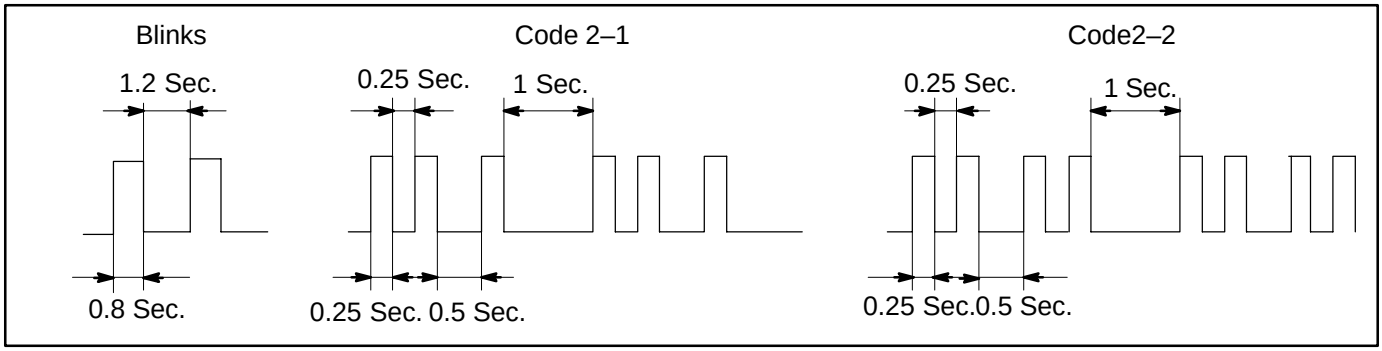

(b) Automatic registration mode completion

If completing the mode forcibly when more than 1 key code have been registered in the automatic registration mode, perform the following procedures.

After 1 more key code have been registered with master key, perform step (1) or (2) without pulling the key out or inserting the already registered key.

(1) Depress and release brake pedal 5 times or more within 15sec.

(2) With the TOYOTA hand–held tester, require automatic registration mode completion.

2. REGISTRATION OF ADDITIONAL MASTER KEY

There are 2 ways for registration of additional master key, one is depressing brake pedal and acceleration pedal and the other is using TOYOTA hand–held tester.

HINT:

- It is possible to register up to 7 master key codes including the already registered key code.
- When any operation time described below is over, registration mode completes.
- When the next procedure is performed while the timer is working, the timer completes counting time, then next timer starts.

(1) Depressing brake pedal and acceleration pedal:

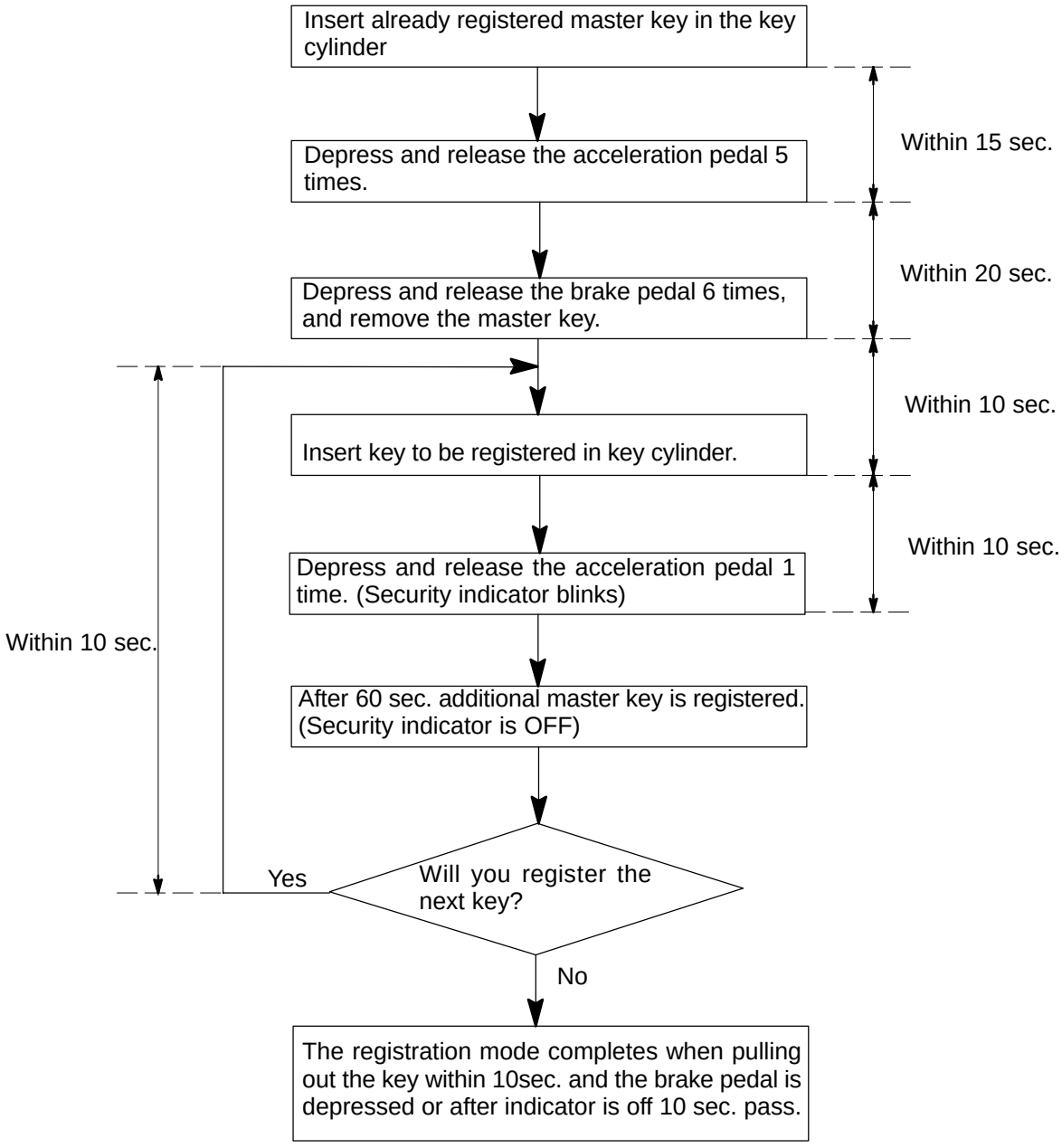

(2) Using TOYOTA hand–held tester:

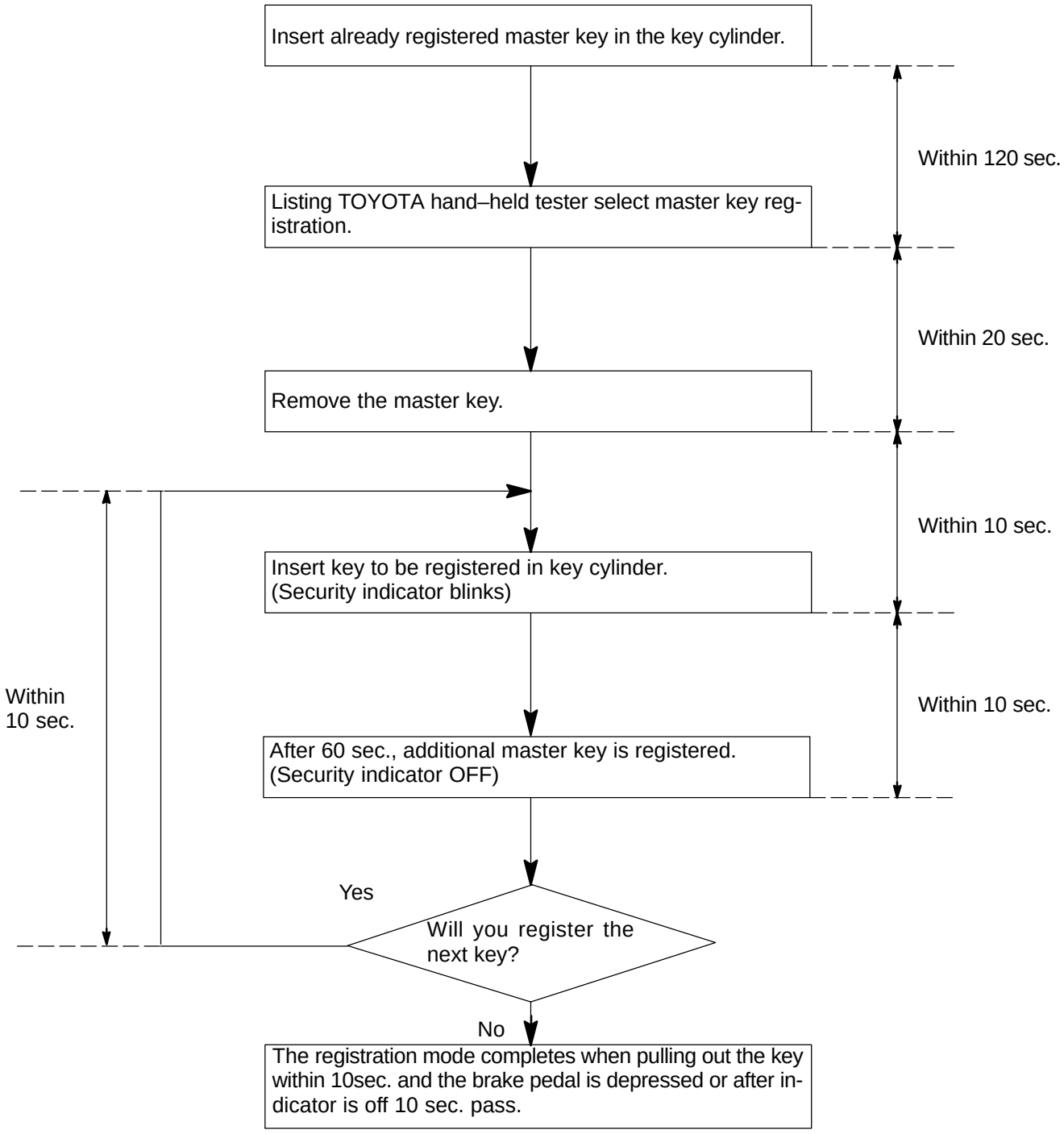

3. REGISTRATION ADDITIONAL OF SUB–KEY

There are 2 ways for registration of additional sub–key, one is depressing brake pedal and acceleration pedal and the other is using TOYOTA hand–held tester.

HINT:

- It is possible top register up to 3 sub–key codes including the already registered key code.
- When any operation time described below is over, registration mode completes.
- When the next procedure is performed while the timer is working, the timer completes counting time, then next timer starts.

(1) Depressing brake pedal and acceleration pedal:

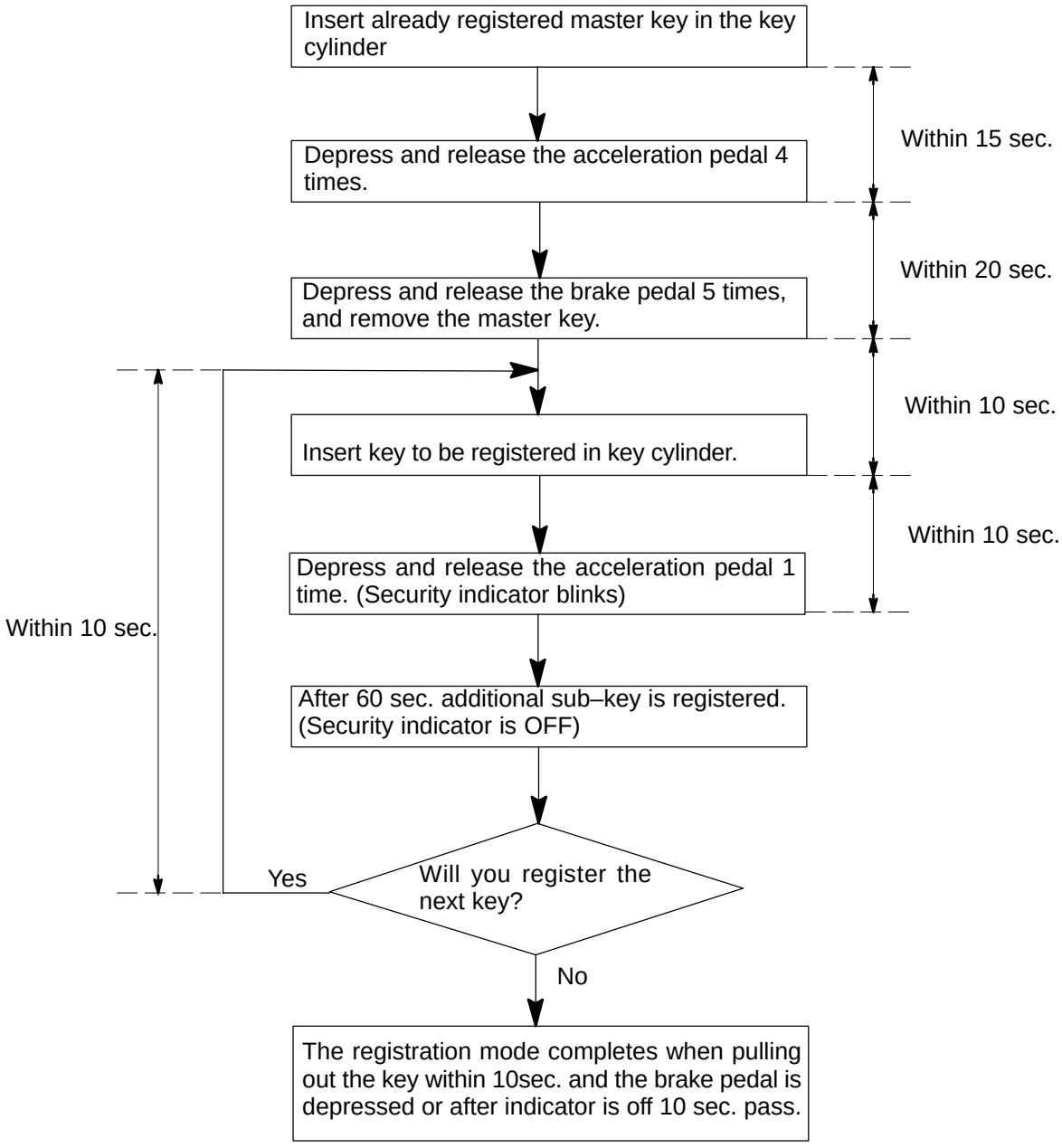

(2) Using TOYOTA hand–held tester:

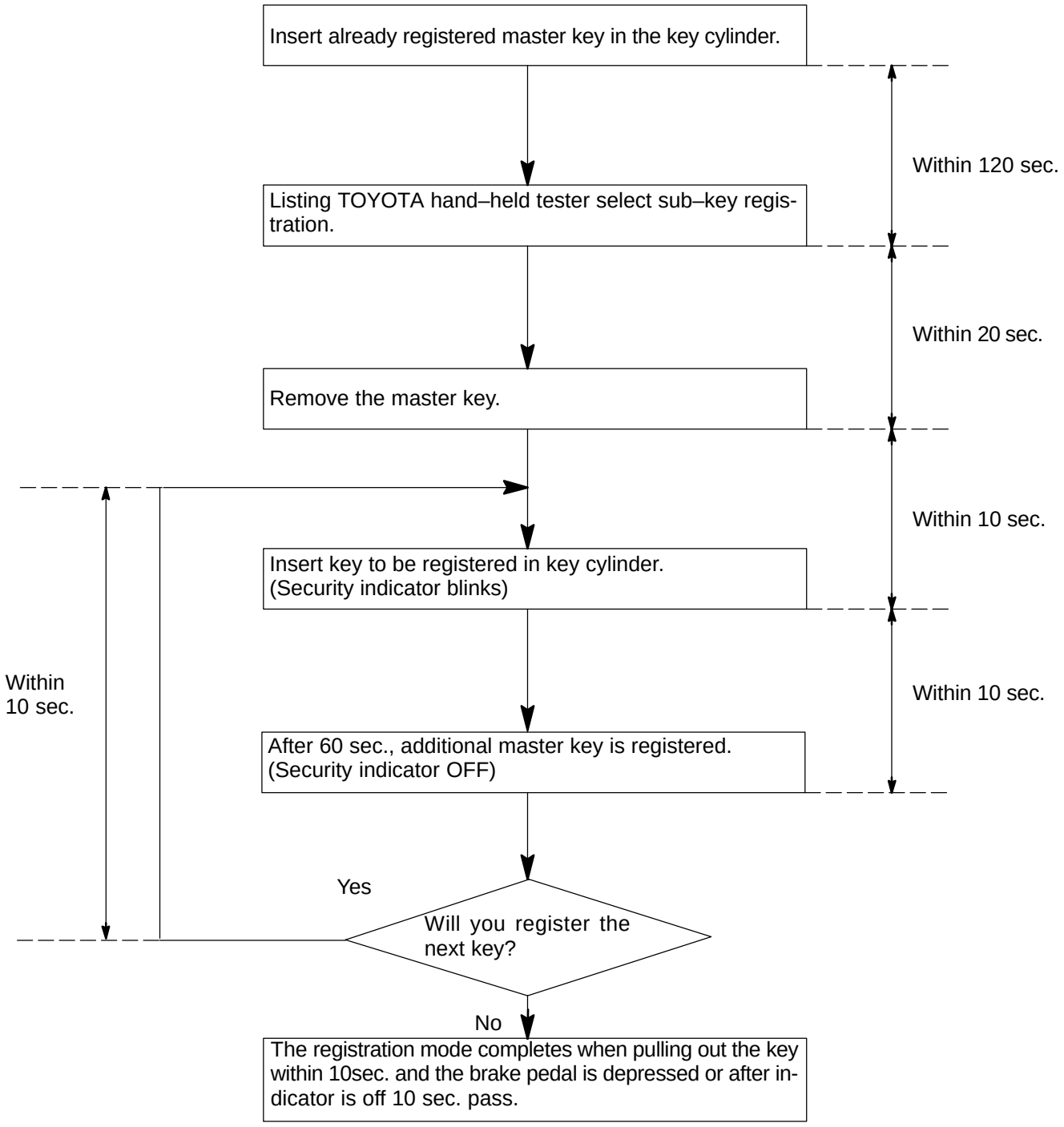

4. ERASURE OF TRANSPONDER KEY CODE

There are 2 ways for erasure of transponder key code, one is depressing brake pedal and acceleration pedal and the other is using TOYOTA hand–held tester.

NOTICE:

All other master and sub–key codes are deleted leaving the master key code to use the operation. When using the key which was used before deleting, it is necessary to register the code again.

HINT:

- When any operation time described below is over, registration mode completes.
- When the next procedure is performed while the timer is working, the timer completes counting time, then next timer starts.

(1) Depressing brake pedal and acceleration pedal:

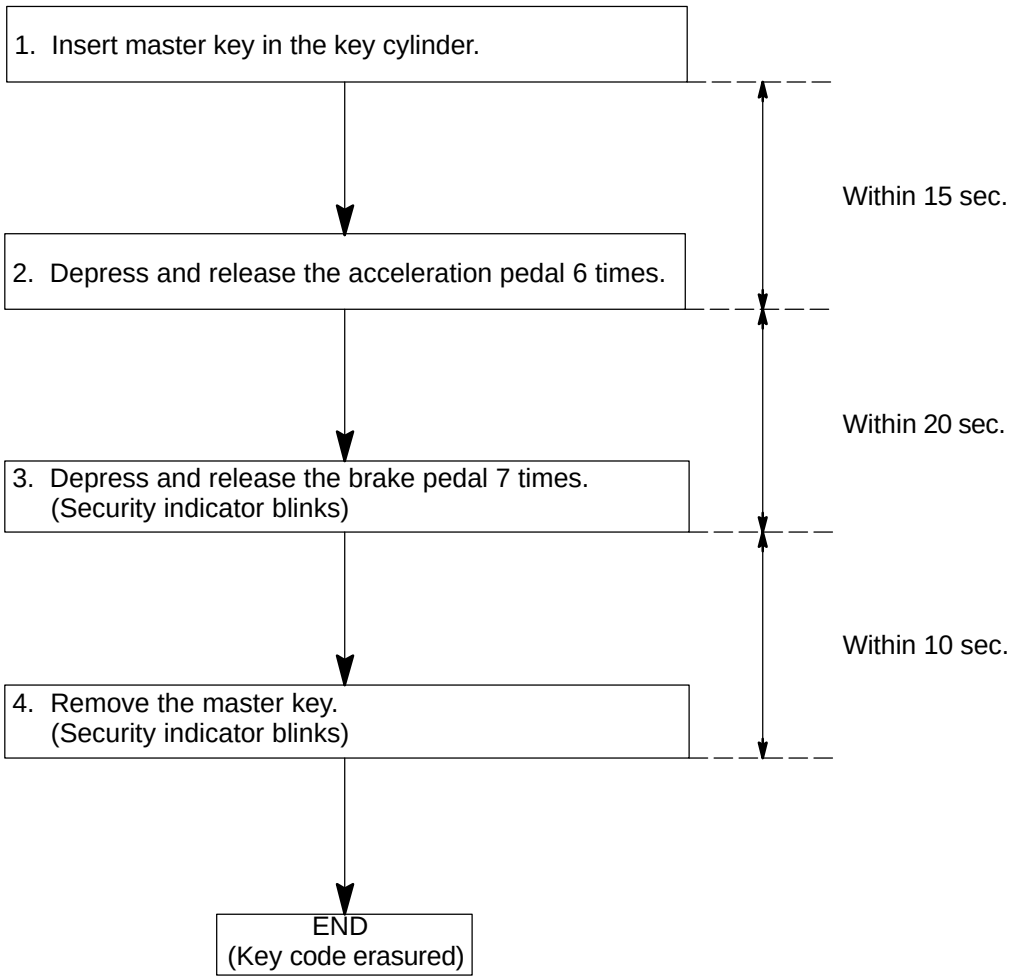

HINT:

When the key cannot be pulled out in the step 4, key code deletion is canceled.
(Security indicator is OFF)

(2) Using TOYOTA hand–held tester:

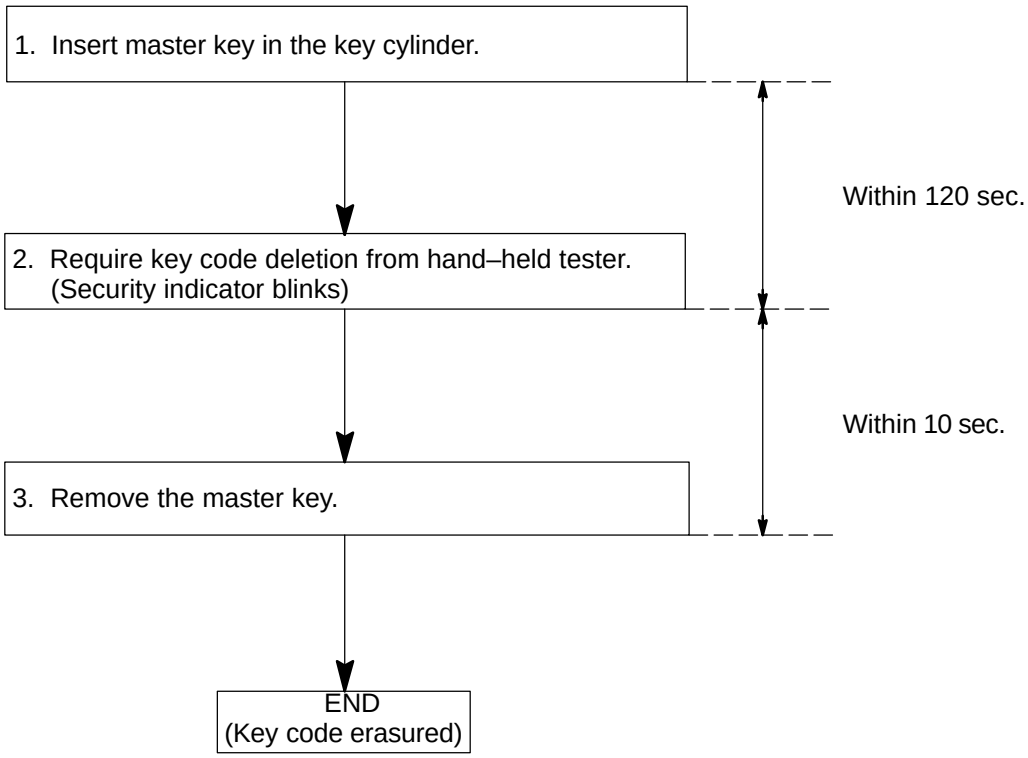

HINT:

When the key cannot be pulled out in the step 3, key code deletion is canceled.
(Security indicator is OFF)

BE0B3–06

LOCATION

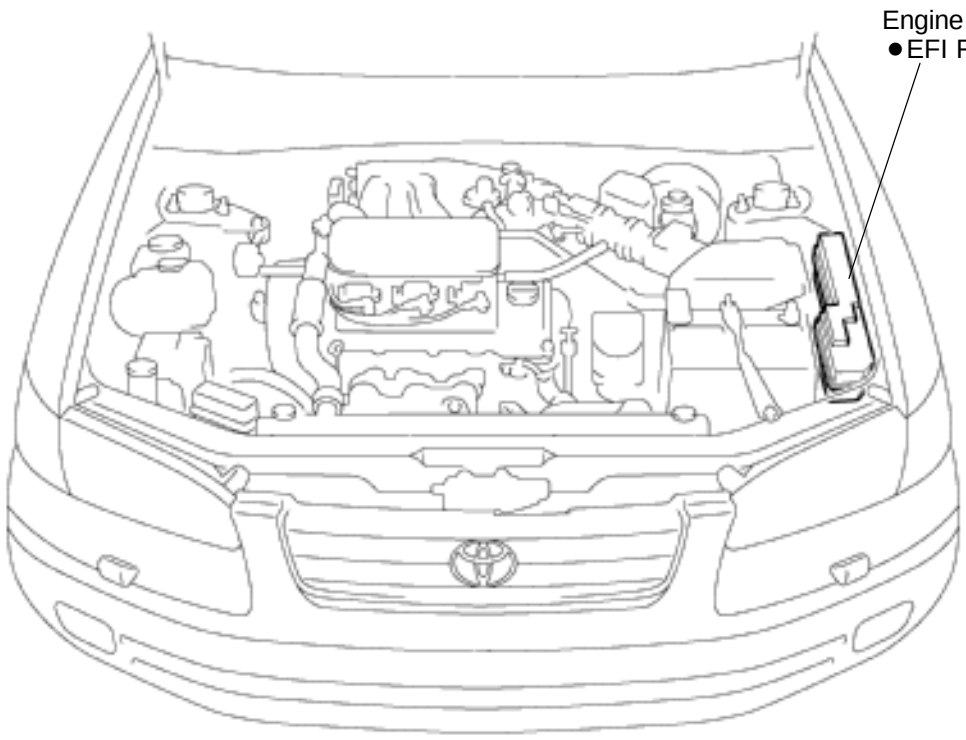

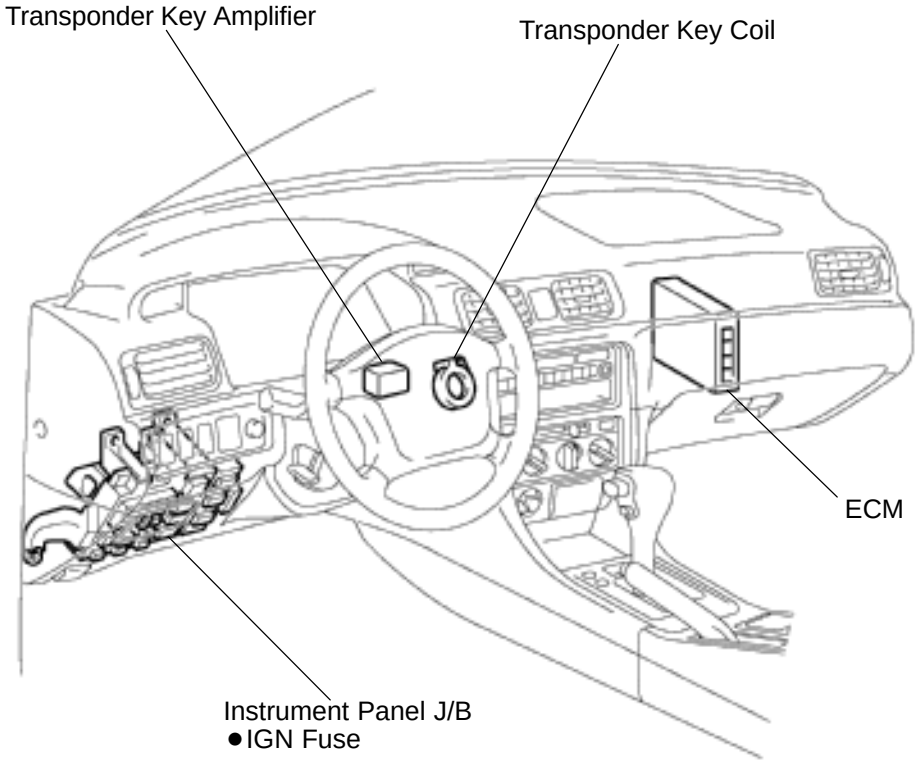

I02682

BE0B4–05

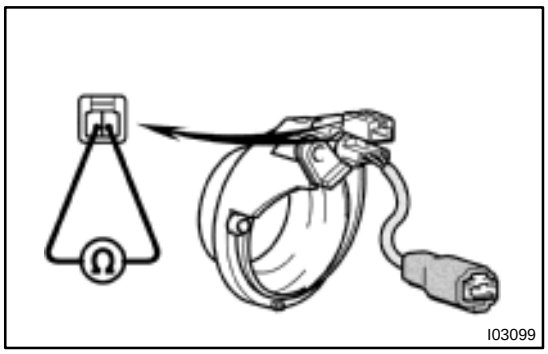

INSPECTION

INSPECTION TRANSPONDER KEY COIL CONTINUITY

Check that continuity exists between terminal 1 and 2.
If continuity is not as specified, replace the coil.

BRAKE SYSTEM

BR0A9–01

PRECAUTION

1. **Care must be taken to replace each part properly as it could affect the performance of the brake system and result in a driving hazard. Replace the parts with parts having the same part number or equivalent.**
2. **It is very important to keep parts and the area clean when repairing the brake system.**
3. **If the vehicle is equipped with a mobile communication system, refer to the precautions in the IN section.**

TROUBLESHOOTING

PROBLEM SYMPTOMS TABLE

BR0AA–03

Use the table below to help you find the cause of the problem. The numbers indicate the priority of the likely cause of the problem. Check each part in order. If necessary, replace these parts.

Symptom	CAUSE	PAGE
Low pedal or spongy pedal	1. Fluid leaks for brake system	DI–536
	2. Air in brake system	BR–4
	3. Piston seals (Worn or damaged)	BR–24 BR–31 BR–39
	4. Rear brake shoe clearance (Out of adjustment)	BR–35
	5. Master cylinder (Faulty)	BR–9
	6. Booster push rod (Out of adjustment)	BR–20
Brake drag	1. Brake pedal freeplay (Minimal)	BR–5
	2. Parking brake lever travel (Out of adjustment)	BR–8
	3. Parking brake wire (Sticking)	
	4. Rear brake shoe clearance (Out of adjustment)	BR–35
	5. Pad or lining (Cracked or distorted)	BR–21 BR–31 BR–36
	6. Piston (Stuck)	BR–24 BR–31 BR–39
	7. Piston (Frozen)	BR–24 BR–31 BR–39
	8. Anchor, return or tension spring (Faulty)	BR–31 BR–45
	9. Booster push rod (Out of adjustment)	BR–20
	10. Vacuum leaks for booster system	BR–18
	11. Master cylinder (Faulty)	BR–9
Brake pull	1. Piston (Stuck)	BR–24 BR–31 BR–39
	2. Pad or lining (Oily)	BR–21 BR–31 BR–36
	3. Piston (Frozen)	BR–24 BR–31 BR–39
	4. Disc (Scored)	BR–24 BR–39
	5. Pad or lining (Cracked or distorted)	BR–21 BR–31 BR–36

Hard pedal but brake inefficient	1. Fluid leaks for brake system	DI–536
	2. Air in brake system	BR–4
	3. Pad or lining (Worn)	BR–21 BR–31 BR–36
	4. Pad or lining (Cracked or distorted)	BR–21 BR–31 BR–36
	5. Rear brake shoe clearance (Out of adjustment)	BR–35
	6. Pad or lining (Oily)	BR–21 BR–31 BR–36
	7. Pad or lining (Glazed)	BR–21 BR–31 BR–36
	8. Disc (Scored)	BR–24 BR–39
	9. Booster push rod (Out of adjustment)	BR–20
	10.Vacuum leaks for booster system	BR–18
Noise from brakes	1. Pad or lining (Cracked or distorted)	BR–21 BR–31 BR–36
	2. Installation bolt (Loose)	BR–24 BR–39
	3. Disc (Scored)	BR–24 BR–39
	4. Pad support plate (Loose)	BR–21 BR–36
	5. Sliding pin (Worn)	BR–24 BR–39
	6. Pad or lining (Dirty)	BR–21 BR–31 BR–36
	7. Pad or lining (Glazed)	BR–21 BR–31 BR–36
	8. Anchor, return or tension spring (Faulty)	BR–31 BR–45
	9. Anti–squeal shim (Damaged)	BR–21 BR–36
	10.Shoe hold–down spring (Damaged)	BR–31 BR–45

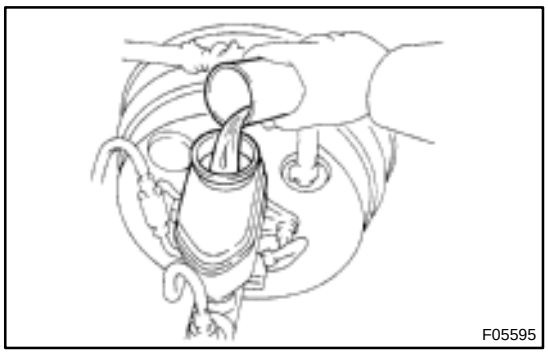

BRAKE FLUID

BR0AB–03

BLEEDING

HINT:

If any work is done on the brake system or if air is suspected in the brake lines, bleed the air from the system.

NOTICE:

Do not let brake fluid remain on a painted surface. Wash it off immediately.

1. FILL BRAKE RESERVOIR WITH BRAKE FLUID

Check the fluid level in the reservoir after bleeding each wheel. Add fluid, if necessary.

Fluid: SAEJ1703 or FMVSS No.116 DOT 3

2. BLEED MASTER CYLINDER

HINT:

If the master cylinder has been disassembled or if the reservoir becomes empty, bleed the air from the master cylinder.

(a) Disconnect the 2 brake lines from the master cylinder.

(b) Slowly depress the brake pedal and hold it.

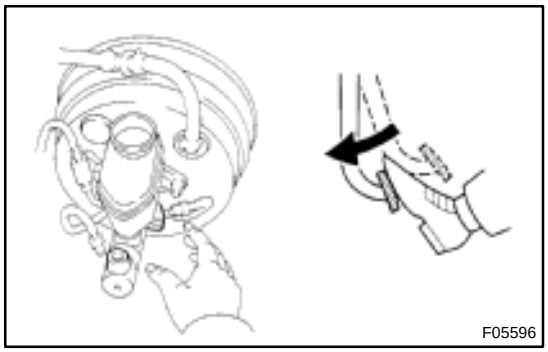

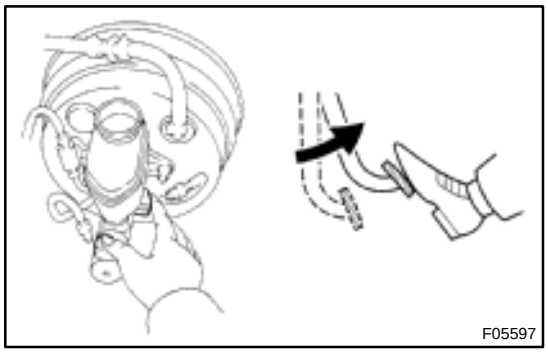

(c) Block off the outlet plugs with your fingers, and release the brake pedal.

(d) Repeat (b) and (c) 3 or 4 times.

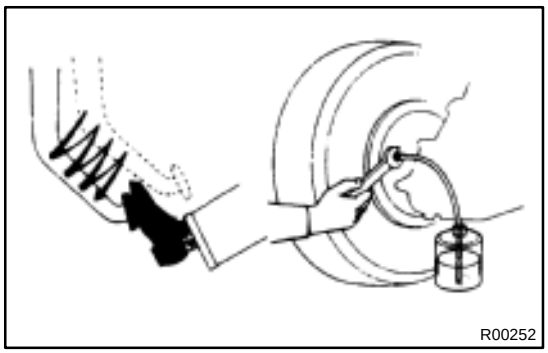

3. CONNECT VINYL TUBE TO BRAKE CALIPER OR WHEEL CYLINDER BLEEDER PLUG

Insert the other end of the tube in a half–full container of brake fluid.

NOTICE:

Bleed air of the rear brake first. If front brake is bled first, rear brake air cannot be bled.

4. BLEED BRAKE LINE

(a) Slowly depress the brake pedal several times.

(b) While an assistant depresses the pedal, loosen the bleeder plug until fluid starts to run out. Then tighten the bleeder plug.

(c) Repeat this procedure until there are no more air bubbles in the fluid.

Torque: (Bleeder plug)

8.3 N·m (85 kgf·cm, 74 in.·lbf)

5. REPEAT PROCEDURE FOR EACH WHEEL

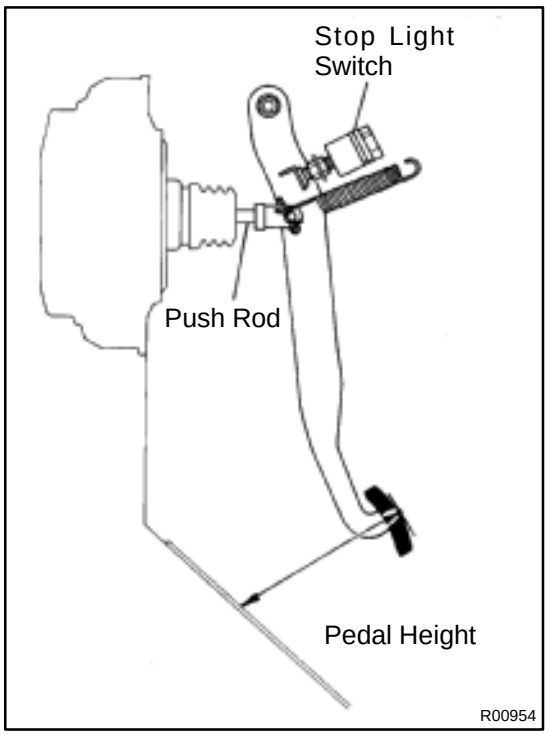

BRAKE PEDAL

BR0YH–01

ON–VEHICLE INSPECTION

1. CHECK PEDAL HEIGHT

Pedal height from asphalt sheet:
152.0 – 162.0 mm (5.984 – 6.378 in.)

2. IF NECESSARY, ADJUST PEDAL HEIGHT

(a) Disconnect the connector from the stop light switch.
(b) Loosen the stop light switch lock nut and remove the stop light switch.
(c) Loosen the push rod lock nut.
(d) Adjust the pedal height by turning the pedal push rod.
(e) Tighten the push rod lock nut.
Torque: 25 N·m (260 kgf·cm, 19 ft·lbf)
(f) Install the stop light switch and turn it until it lightly contacts the pedal stopper.
(g) Push in the brake pedal 5–15 mm (0.20–0.59 in.), turn the stop light switch to lock the nut in the position where the stop light goes off.
(h) Connect the connector to the stop light switch.
(i) After installation, push in the brake pedal 5–15 mm (0.20–0.59 in.), check that stop light lights up.
(j) Connect the connector to the stop light switch.
(k) After adjusting the pedal height, check the pedal freeplay.

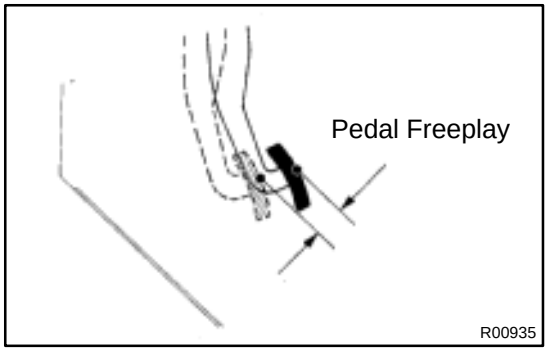

3. CHECK PEDAL FREEPLAY

(a) Stop the engine and depress the brake pedal several times until there is no more vacuum left in the booster.
(b) Push in the pedal by hand until the resistance begins to be felt, then measure the distance.
Pedal freeplay: 1 – 6 mm (0.04 – 0.24 in.)

HINT:
The freeplay to the 1st resistance is due to the play between the clevis and pin. This is magnified up to 1 – 6 mm (0.04 – 0.24 in.) at the pedal.
If incorrect, check the stop light switch clearance.
If the clearance is OK, then troubleshoot the brake system.

Stop light switch clearance:
0.5 – 2.4 mm (0.020 – 0.094 in.)

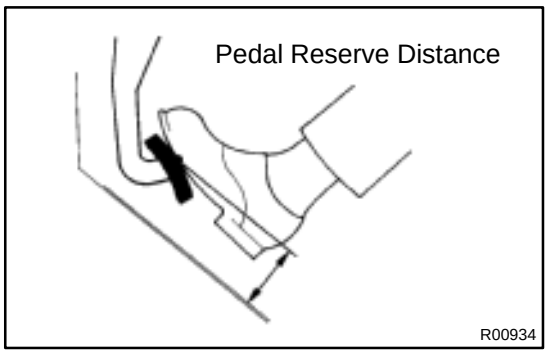

4. CHECK PEDAL RESERVE DISTANCE

(a) Release the parking brake.

(b) With the engine running, depress the pedal and measure the pedal reserve distance, as shown.

Pedal reserve distance from asphalt sheet at 490 N (50 kgf, 110.2 lbf): More than 70 mm (2.76 in.)

If the reserve distance is incorrect, troubleshoot the brake system.

BR0YI–01

COMPONENTS

A/T:

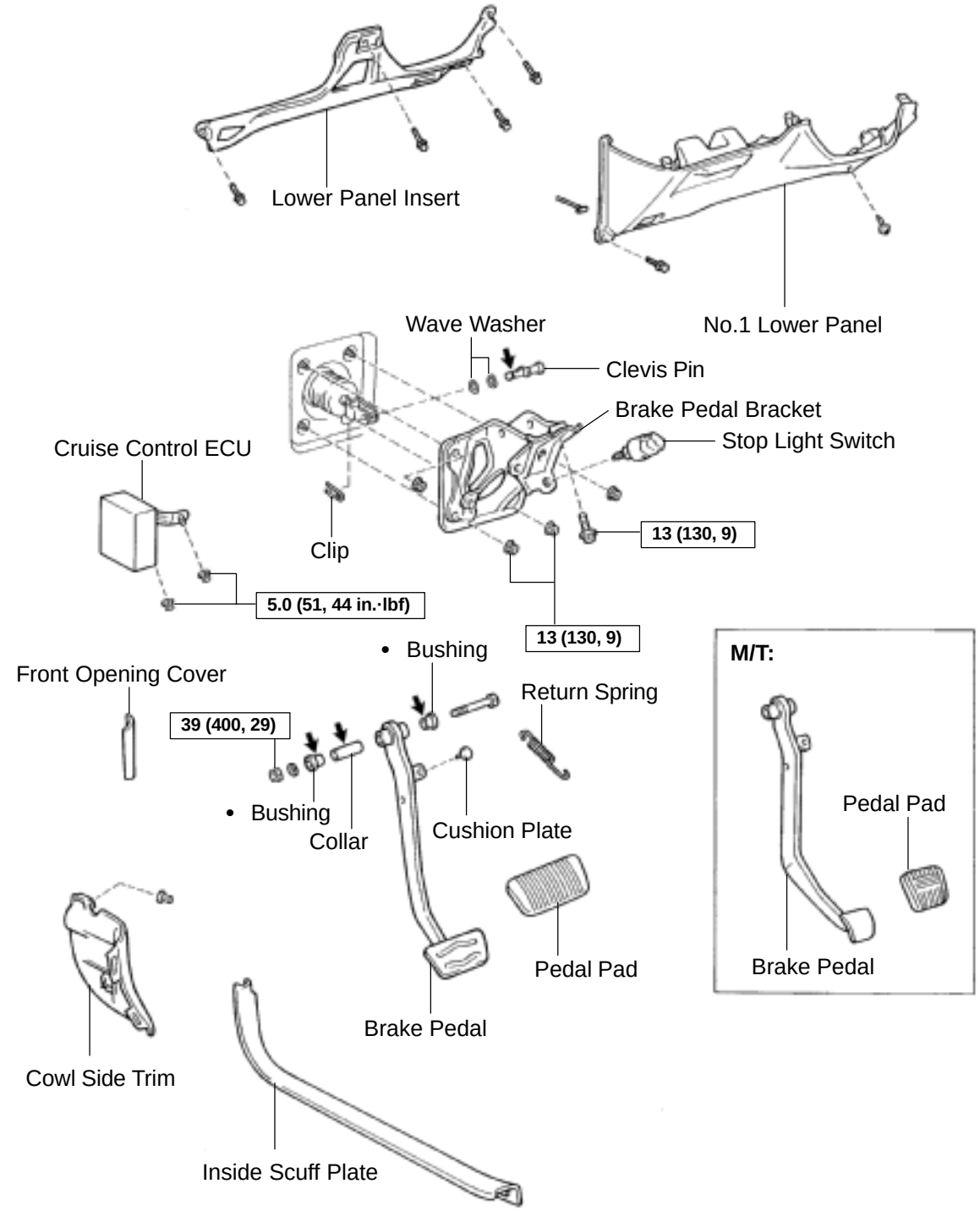

N·m (kgf·cm, ft·lbf) : Specified torque

• Non–reusable part

Lithium soap base glycol grease

N

F07004

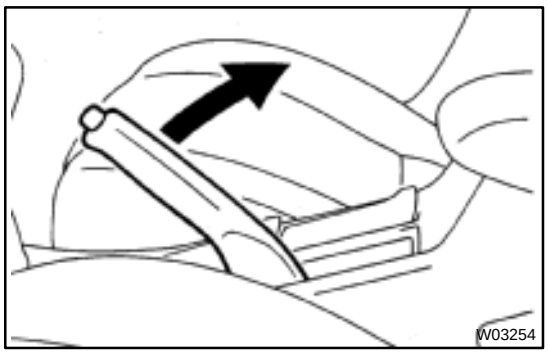

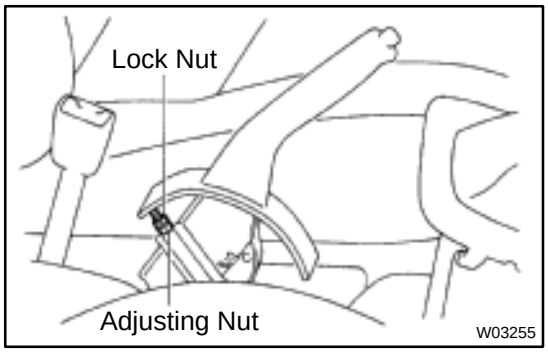

PARKING BRAKE LEVER

BR0AD–03

ON–VEHICLE INSPECTION

1. CHECK THAT PARKING BRAKE LEVER TRAVEL

Pull the parking brake lever all the way up, and count the number of clicks.

Parking brake lever travel at 196 N (20 kgf, 44.1 lbf): 5 – 8 clicks

If incorrect, adjust the parking brake.

2. IF NECESSARY, ADJUST PARKING BRAKE LEVER TRAVEL

HINT:

Before adjusting the parking brake lever travel, make sure that the rear brake shoe clearance has been adjusted. For shoe clearance adjustment, see step 2 on page BR–35 or step 1 on page BR–48.

(a) Remove the console box.

(b) Loosen the lock nut and adjust the adjusting nut until the lever travel is correct.

(c) Tighten the lock nut.

Torque: 5.4 N·m (55 kgf·cm, 48 in.·lbf)

(d) Install the console box.

BRAKE MASTER CYLINDER

BR0AE–02

COMPONENTS

w/o ABS

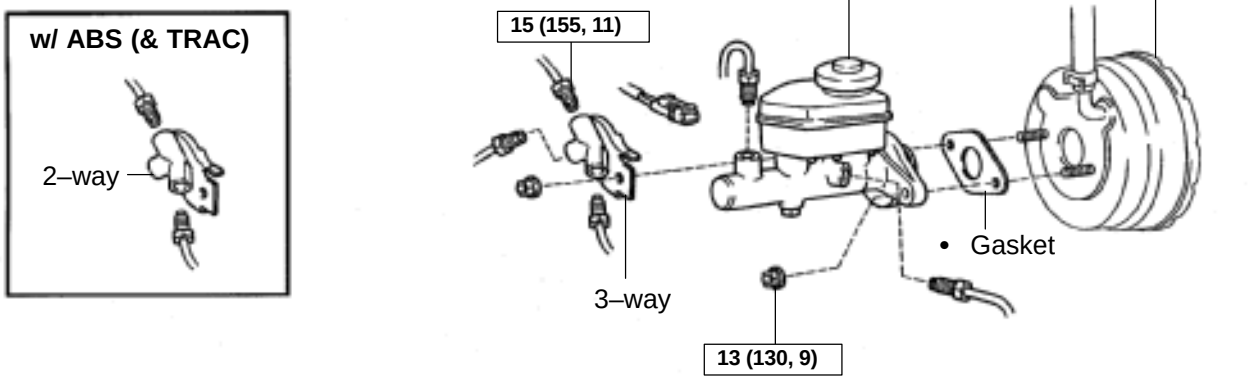

N·m (kgf·cm, ft·lbf) : Specified torque
• Non–reusable part

Z19120

w/ TRAC

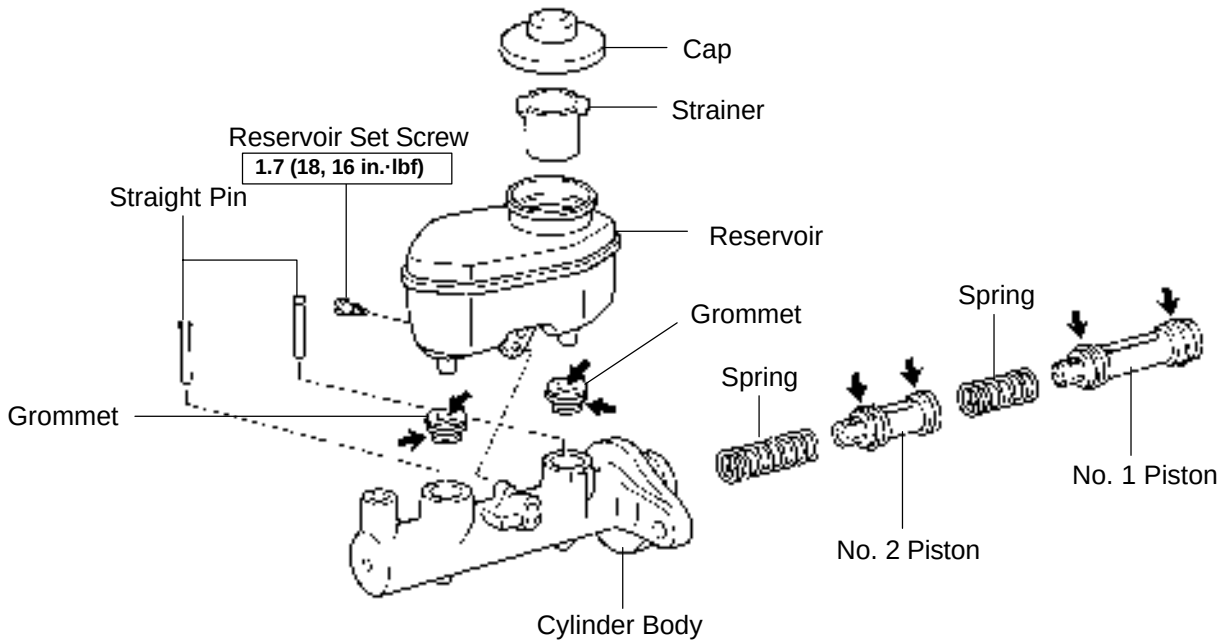

N·m (kgf·cm, ft·lbf) : Specified torque
◀ Lithium soap base glycol grease

W03569

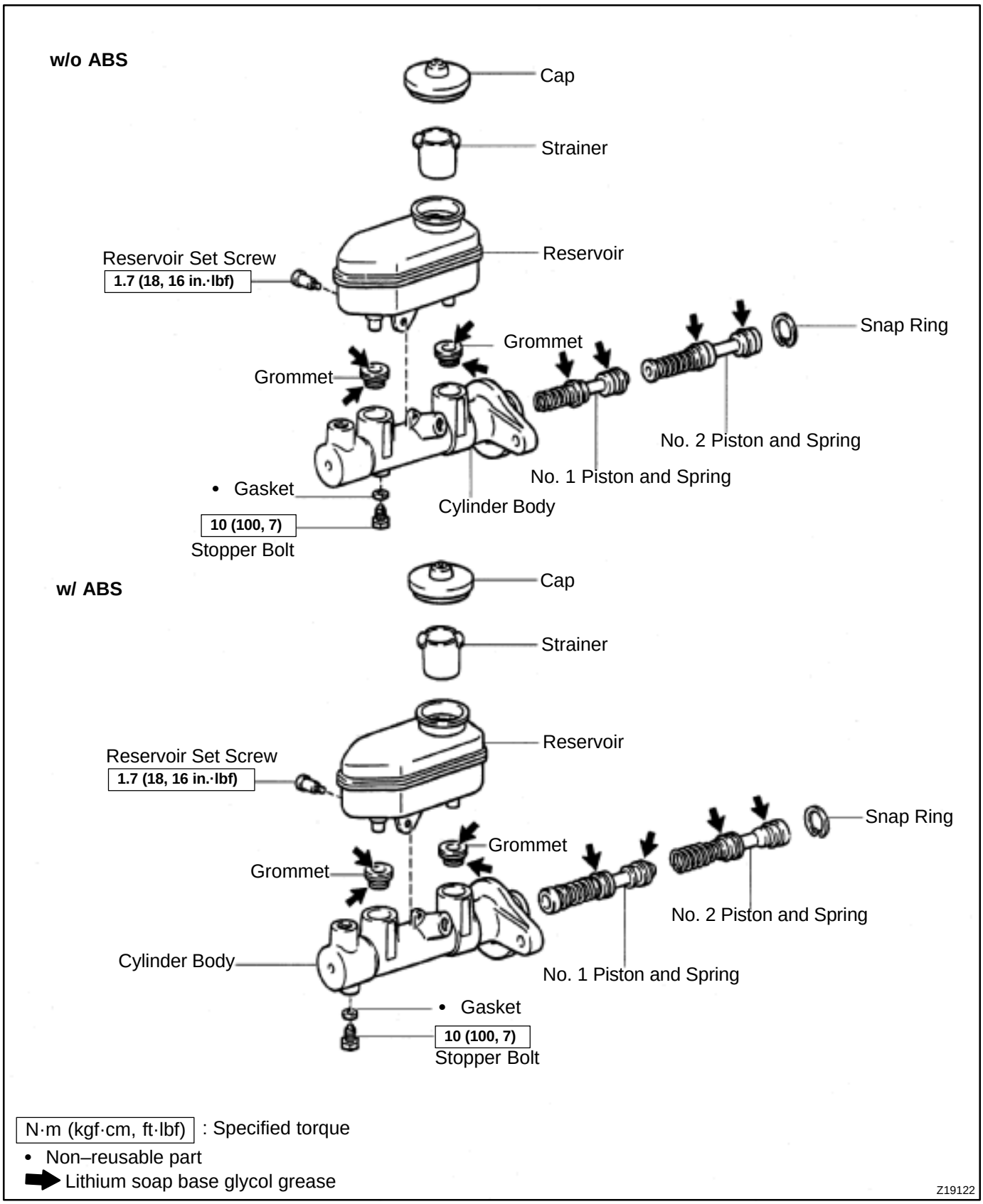
w/o ABS
Cap
Strainer
Reservoir Set Screw
1.7 (18, 16 in.·lbf)
Reservoir
Snap Ring
Grommet
Grommet
No. 2 Piston and Spring
No. 1 Piston and Spring
• Gasket
Cylinder Body
10 (100, 7)
Stopper Bolt
w/ ABS
Cap
Strainer
Reservoir Set Screw
1.7 (18, 16 in.·lbf)
Reservoir
Snap Ring
Grommet
Grommet
No. 2 Piston and Spring
Cylinder Body
No. 1 Piston and Spring
• Gasket
10 (100, 7)
Stopper Bolt
N·m (kgf·cm, ft·lbf) : Specified torque
• Non–reusable part
Lithium soap base glycol grease
Z19122

BR0AF–03

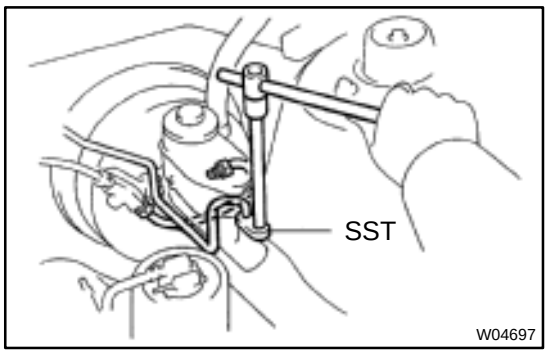

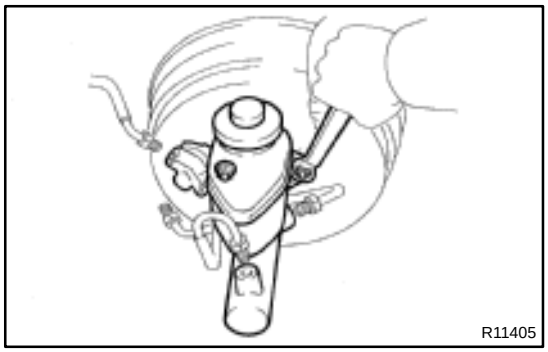

REMOVAL

1. DISCONNECT LEVEL WARNING SWITCH CONNECTOR

2. TAKE OUT FLUID WITH SYRINGE

NOTICE:

Do not let brake fluid remain on a painted surface. Wash it off immediately.

3. DISCONNECT BRAKE LINES

(a) w/ ABS (& TRAC):

Using SST, disconnect the 4 brake lines.

SST 09023–00100

Torque: 15 N·m (155 kgf·cm, 11 ft·lbf)

(b) w/o ABS:

Using SST, disconnect the 5 brake lines.

SST 09023–00100

Torque: 15 N·m (155 kgf·cm, 11 ft·lbf)

4. REMOVE MASTER CYLINDER

Remove the 2 nuts, and pull out the 2 or 3–way, master cylinder and gasket.

Torque: 13 N·m (130 kgf·cm, 9 ft·lbf)

BR0AG–02

DISASSEMBLY

1. REMOVE RESERVOIR

(a) Remove the set screw and pull out the reservoir.
Torque: 1.7 N·m (18 kgf·cm, 16 in.·lbf)

(b) Remove the cap and strainer from the reservoir.

2. REMOVE 2 GROMMETS

3. Except w/ TRAC:
PLACE CYLINDER IN VISE

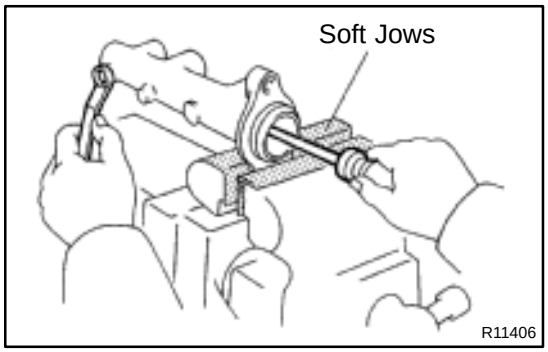

4. w/o TRAC:
REMOVE PISTON STOPPER BOLT

Using a screwdriver, push the pistons in all the way and remove the piston stopper bolt and gasket.

HINT:

Tape the screwdriver tip before use.

Torque: 10 N·m (100 kgf·cm, 7 ft·lbf)

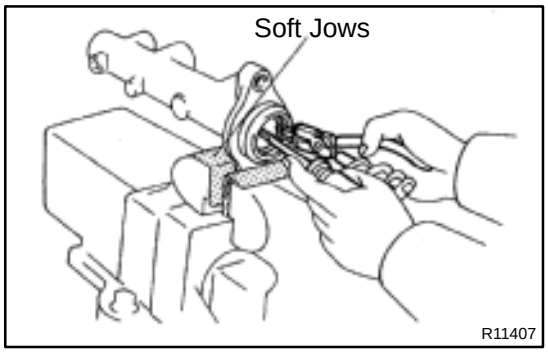

5. w/o TRAC:
REMOVE 2 PISTONS AND SPRINGS

(a) Push in the piston with a screwdriver and remove the snap ring with snap ring pliers.

HINT:

Tape the screwdriver tip before use.

(b) Remove the No. 1 piston and spring by hand, pulling straight out, not at an angle.

NOTICE:

- **If pulled out and installed at an angle, there is a possibility that the cylinder bore could be damaged.**
- **At the time of reassembly, please refer to the following item.**
  Be careful not to damage the rubber lips on the pistons.

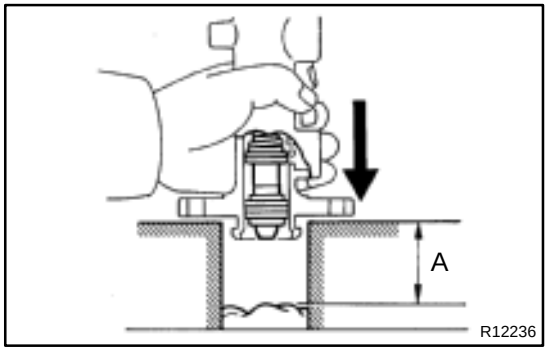

(c) Place a rag and 2 wooden blocks on the work table, and lightly tap the cylinder flange against the block edges until the No. 2 piston drops out of the cylinder.

HINT:

Make sure that the distance (A) from the rag to the top of the blocks is at least 100 mm (3.94 in.).

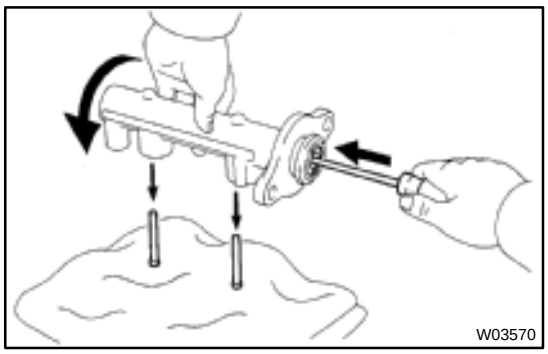

6. w/ TRAC:
REMOVE 2 PISTONS AND SPRINGS

(a) Push in the piston with a screwdriver, and remove the 2 straight pins by turning over the cylinder body.

HINT:

Tape the screwdriver tip before use.

(b) Remove the 2 pistons and springs by hand, pulling straight out, not at an angle.

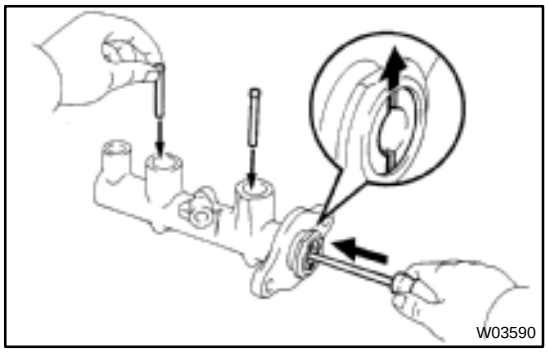

NOTICE:

- **If pulled out and installed at an angle, there is a possibility that the cylinder bore could be damaged.**
- **At the time of reassembly, be careful not to damage the rubber lips on the pistons.**

HINT:

At the time of reassembly, insert the pistons with elliptic hole facing vertically.

BR0AH–01

INSPECTION

HINT:

Clean the disassembled parts with compressed air.

1. INSPECT CYLINDER BORE FOR RUST OR SCORING

2. INSPECT CYLINDER FOR WEAR OR DAMAGE

If necessary, clean or replace the cylinder.

BR0AI–02

REASSEMBLY

Reassembly is in the reverse order of disassembly (See page BR–12).

NOTICE:

Apply lithium soap base glycol grease to the rubber parts indicated by the arrows (See page BR–9).

BR0AJ–02

INSTALLATION

Installation is in the reverse order of removal (See page BR–11).

HINT:

- Before installation, adjust length of the brake booster push rod (See page BR–20).
- After installation, fill the brake reservoir with brake fluid, bleed the brake system and check for leaks (See page BR–4).
- Check and adjust brake pedal (See page BR–5).

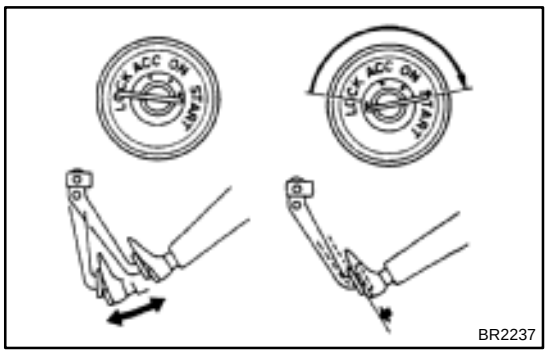

BRAKE BOOSTER ASSEMBLY

BR0AK–03

ON–VEHICLE INSPECTION

1. OPERATING CHECK

(a) Depress the brake pedal several times with the engine off and check that there is no change in the pedal reserve distance.

(b) Depress the brake pedal and start the engine. If the pedal goes down slightly, operation is normal.

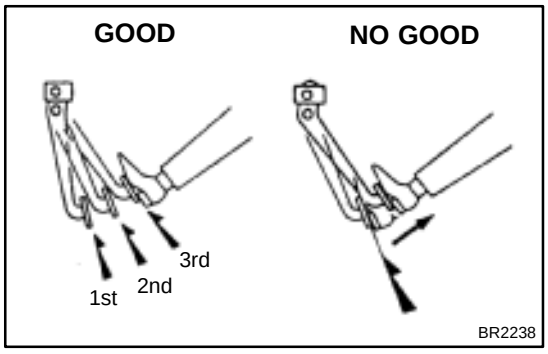

2. AIR TIGHTNESS CHECK

(a) Start the engine and stop it after 1 or 2 minutes. Depress the brake pedal several times slowly.

If the pedal goes down farthest the 1st time, but gradually rises after the 2nd or 3rd time, the booster is air tight.

(b) Depress the brake pedal while the engine is running, and stop the engine with the pedal depressed. If there is no change in the pedal reserve travel after holding the pedal for 30 seconds, the booster is air tight.

BR0AL–03

COMPONENTS

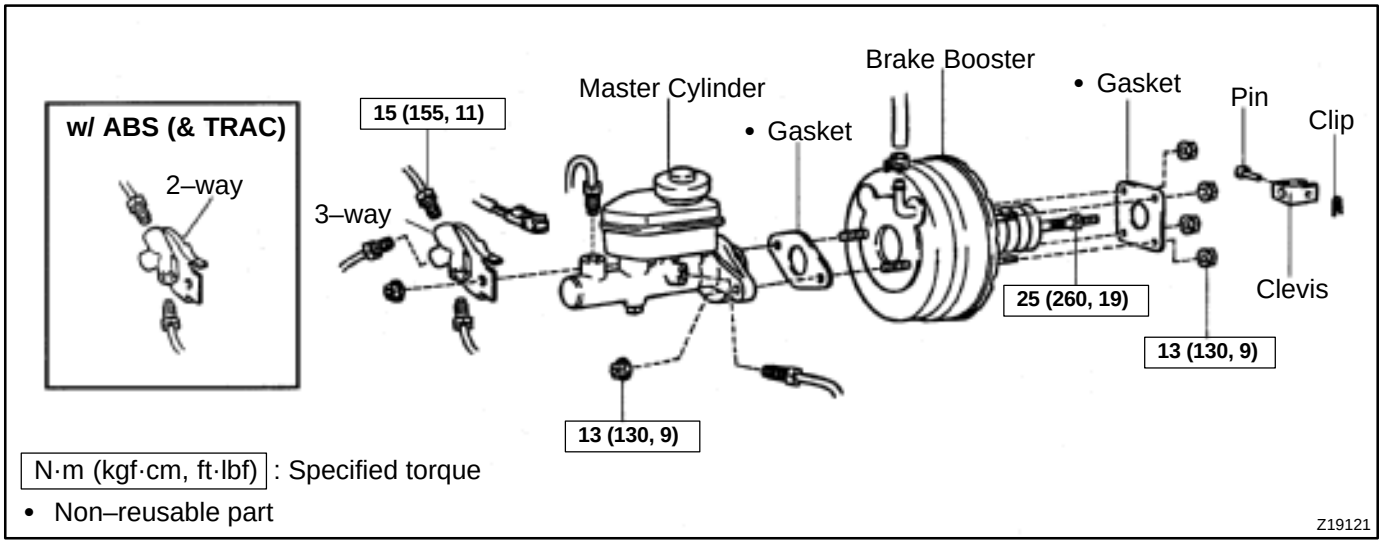

N·m (kgf·cm, ft·lbf) : Specified torque

• Non–reusable part

Z19121

BR0AM–03

REMOVAL

1. **REMOVE AIR CLEANER COVER WITH AIR CLEANER HOSE**
2. **REMOVE MASTER CYLINDER (See page BR–11)**
3. **REMOVE CHARCOL CANISTER**
4. **DISCONNECT VACUUM HOSE FROM BRAKE BOOSTER**
5. **REMOVE PEDAL RETURN SPRING**
6. **REMOVE CLIP AND CLEVIS PIN**

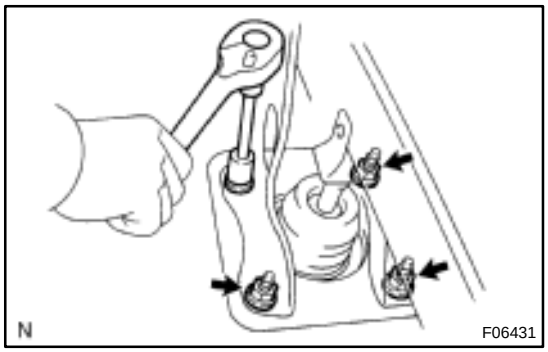

7. **REMOVE BRAKE BOOSTER, GASKET AND CLEVIS**

(a) Remove the 4 nuts and clevis.

(b) Pull out the brake booster and gasket.

BR0AN–03

INSTALLATION

1. INSTALL BRAKE BOOSTER

(a) Install the booster and a new gasket.

(b) Install the clevis to the operating rod.

(c) Install and torque the booster installation nuts.
Torque: 13 N·m (130 kgf·cm, 9 ft·lbf)

(d) Install the clevis, and torque the lock nut.
Torque: 25 N·m (260 kgf·cm, 19 ft·lbf)

(e) Install the clevis pin into the clevis and brake pedal, and install the clip to the clevis pin.

(f) Install the pedal return spring.

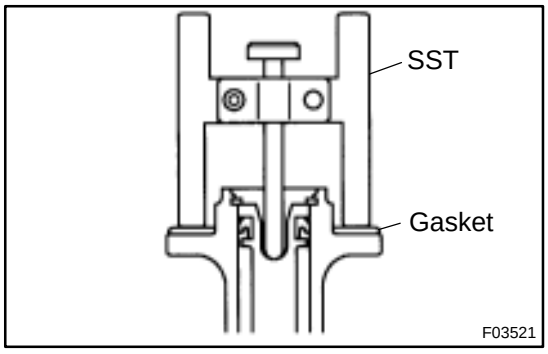

2. ADJUST LENGTH OF BOOSTER PUSH ROD

(a) Install a new gasket on the master cylinder.

(b) Set the SST on the gasket, and lower the pin until its tip slightly touches the piston.
SST 09737–00010

(c) Turn the SST upside down, and set it on the booster.
SST 09737–00010

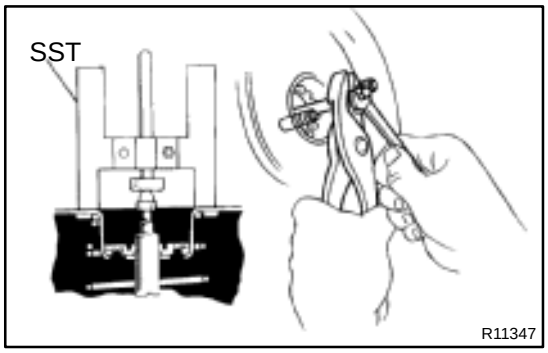

(d) Measure the clearance between the booster push rod and pin head (SST).
Clearance: 0 mm (0 in.)

(e) Adjust the booster push rod length until the push rod lightly touches the pin head.

3. INSTALL CHARCOAL CANISTER TO ORIGINAL POSITION

4. INSTALL MASTER CYLINDER (See page BR–16)

5. INSTALL AIR CLEANER COVER WITH AIR CLEANER HOSE

6. CONNECT VACUUM HOSE TO BRAKE BOOSTER

7. FILL BRAKE RESERVOIR WITH BRAKE FLUID AND BLEED BRAKE SYSTEM (See page BR–4)

8. CHECK FOR FLUID LEAKAGE

9. CHECK AND ADJUST BRAKE PEDAL (See page BR–5)

10. DO OPERATIONAL CHECK (See page BR–17)

FRONT BRAKE PAD

COMPONENTS

BR0AO–03

5S–FE engine:

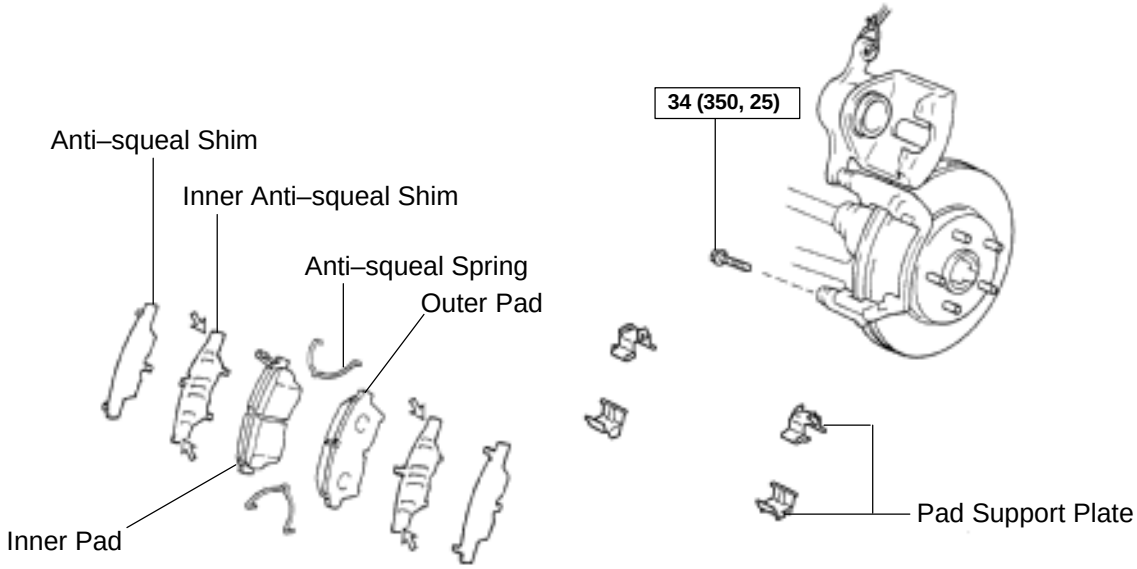

1MZ–FE engine:

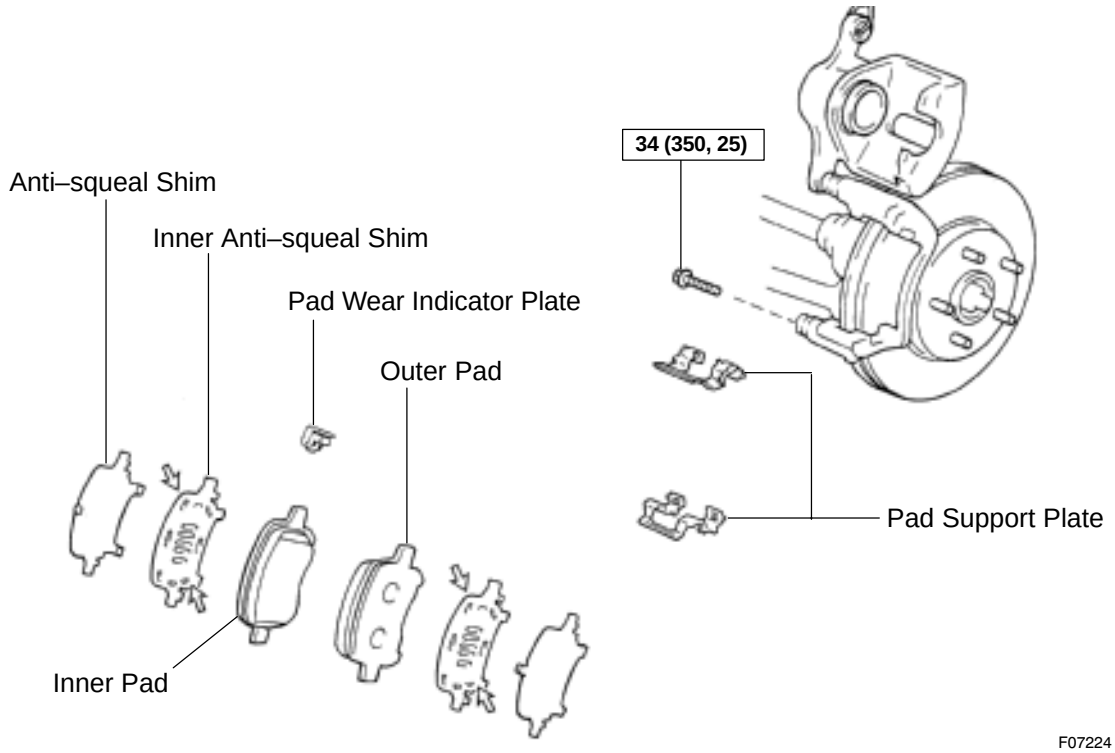

F07224
F06983

N·m (kgf·cm, ft·lbf) : Specified torque

⇦ Disc brake grease

F07225

BR0AP–03

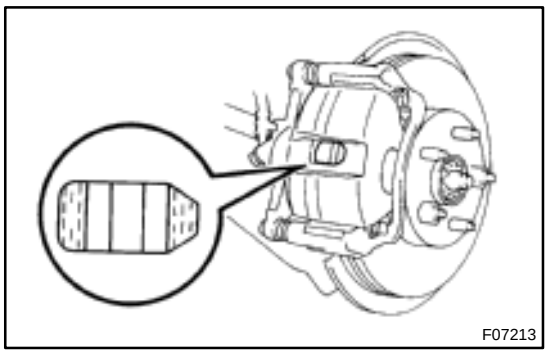
F07213

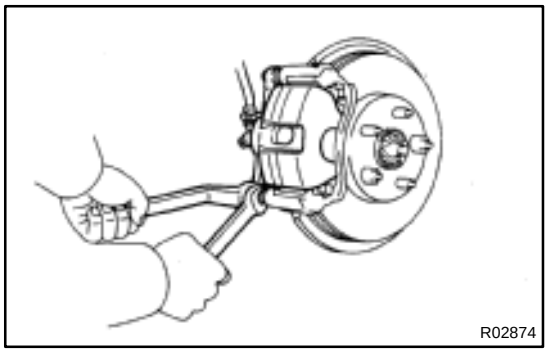
R02874

REPLACEMENT

1. REMOVE FRONT WHEEL

Remove the wheel and temporarily fasten the disc with hub nuts.

2. INSPECT PAD LINING THICKNESS

Check the pad thickness through the caliper inspection hole and replace the pads if they are not within the specification.

Minimum thickness: 1.0 mm (0.039 in.)

3. LIFT UP CALIPER

(a) Remove the bolt and flexible hose from the bracket.

(b) 5S–FE engine:
Hold the sliding pin on the bottom and loosen the installation bolt, and remove the installation bolt.

(c) 1MZ–FE engine:
Remove the bottom side installation bolt.

(d) Lift up the caliper and suspend it securely.

HINT:

Do not disconnect the flexible hose from the caliper.

4. 5S–FE engine:
REMOVE 2 ANTI–SQUEAL SPRINGS

5. REMOVE 2 BRAKE PADS

6. REMOVE 4 ANTI–SQUEAL SHIMS

7. 1MZ–FE engine:
REMOVE PAD WEAR INDICATOR PLATE

8. 1MZ–FE engine:
REMOVE 2 PAD SUPPORT PLATES

9. 5S–FE engine:
REMOVE 4 PAD SUPPORT PLATES

NOTICE:

The anti–squeal springs and support plates can be used again provided that they have sufficient rebound, no deformation, cracks or wear, and have had all rust, dirt and foreign particles cleaned off.

10. CHECK DISC THICKNESS AND RUNOUT
(See page BR–28)

11. INSTALL 2 OR 4 PAD SUPPORT PLATES

12. INSTALL NEW PADS

NOTICE:

When replacing worn pads, the anti–squeal shims and wear indicator plates must be replaced together with the pads.

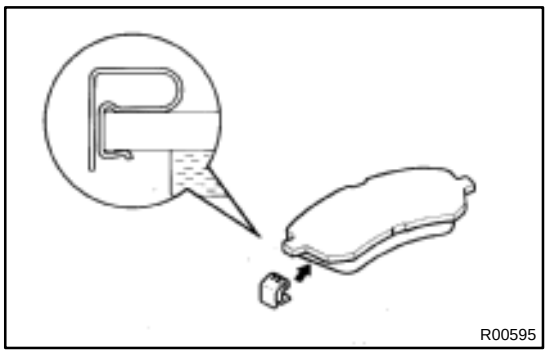

(a) 1MZ–FE engine:
Install a pad wear indicator plate on the inner pad.
(b) Apply disc brake grease to both sides of the inner anti–squeal shims (See page BR–21).
(c) Install the 2 anti–squeal shims on each pad.
(d) Install inner pad with the pad wear indicator plate facing upward.
(e) Install inner pad.
(f) Install outer pad.

NOTICE:

There should be no oil or grease adhering to the friction surfaces of the pads or the disc.

(g) 5S–FE engine:
Install the 2 anti–squeal springs.

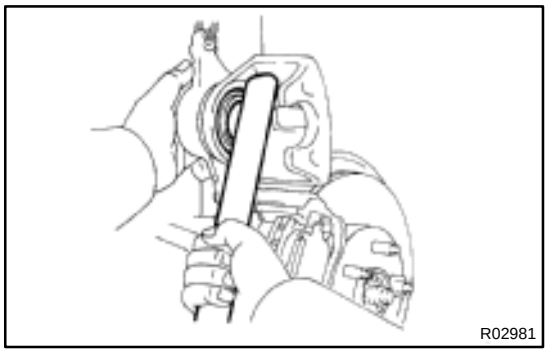

13. INSTALL CALIPER

(a) Draw out a small amount of brake fluid from the reservoir.
(b) Press in the piston with a hammer handle or similar implement.

HINT:

If the piston is difficult to push in, loosen the bleeder plug and push in the piston while letting some brake fluid escape.

(c) Install the caliper.
(d) 5S–FE engine:
Hold the sliding pin and torque the installation bolt.
(e) 1MZ–FE engine:
Install the installation bolt.
Torque: 34 N·m (350 kgf·cm, 25 ft·lbf)
(f) Install the flexible hose and bolt to the bracket.
Torque: 29 N·m (300 kgf·cm, 21 ft·lbf)

14. INSTALL FRONT WHEEL
Torque: 103 N·m (1,050 kgf·cm, 76 ft·lbf)

15. DEPRESS BRAKE PEDAL SEVERAL TIMES

16. CHECK THAT FLUID LEVEL IS AT MAX LINE

FRONT BRAKE CALIPER

BR0AQ–02

COMPONENTS

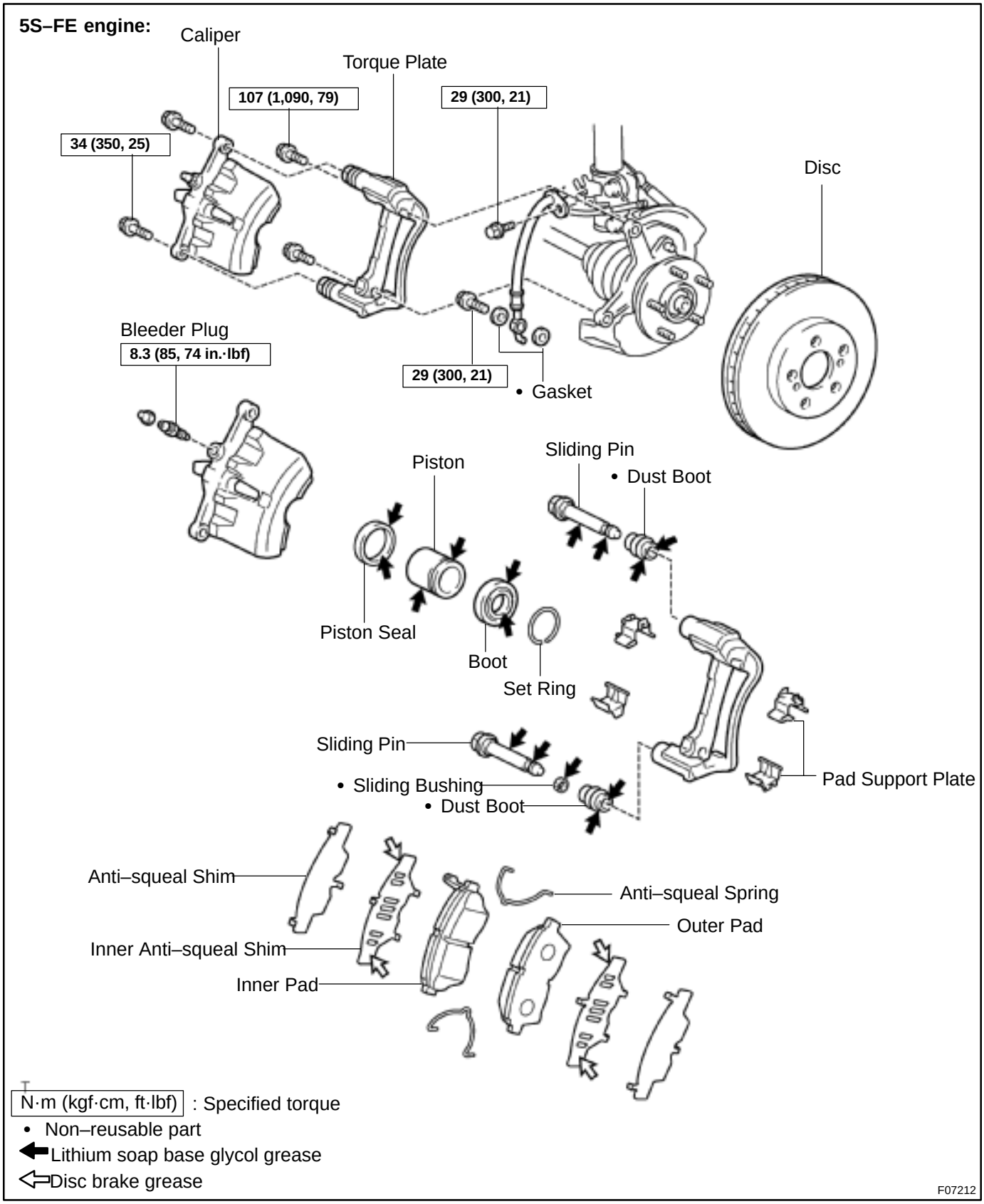

1MZ–FE engine:

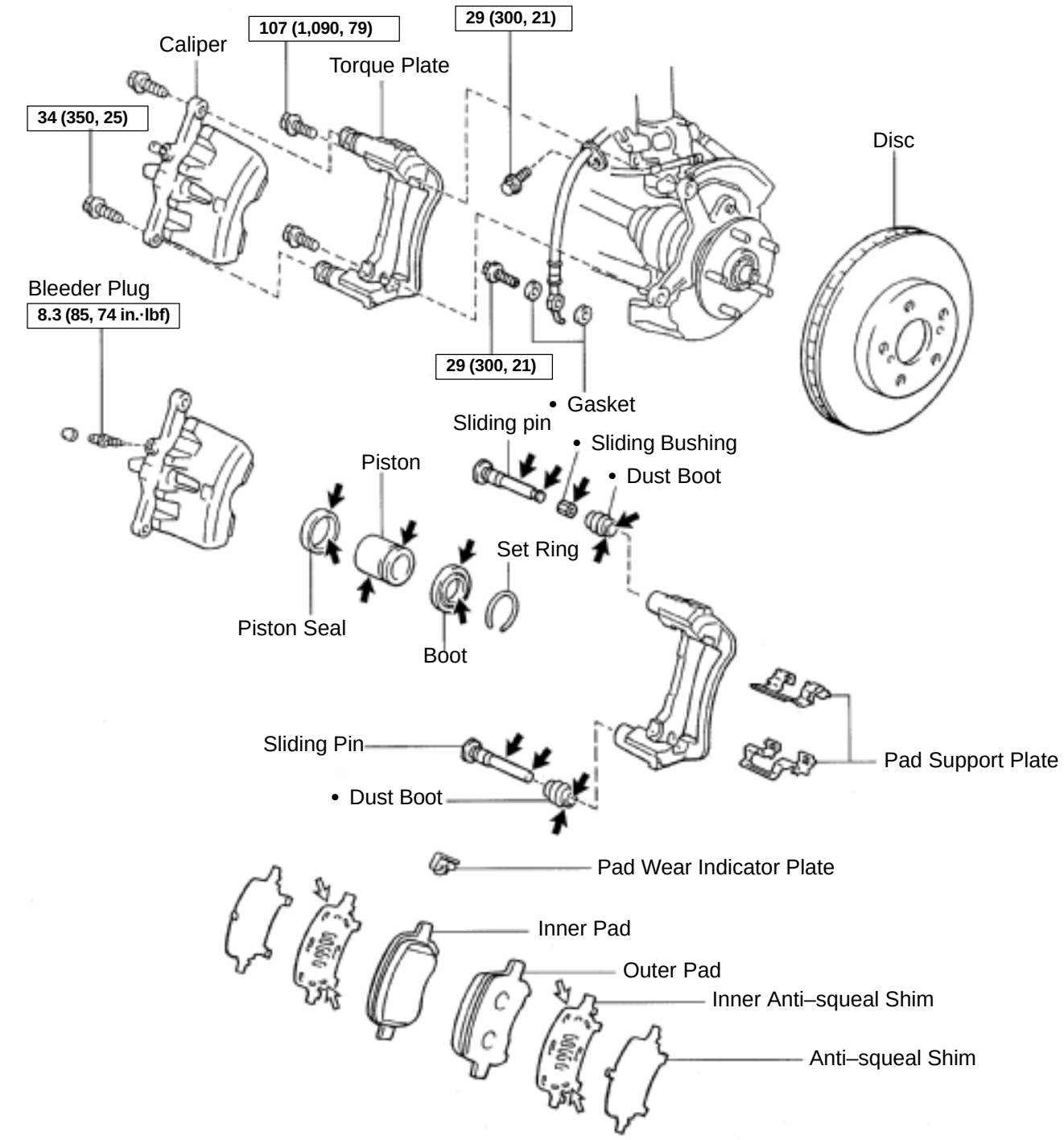

N·m (kgf·cm, ft·lbf) : Specified torque
• Non–reusable part
⬅ Lithium soap base glycol grease
⇦ Disc Brake grease

F07226

BR0AR–03

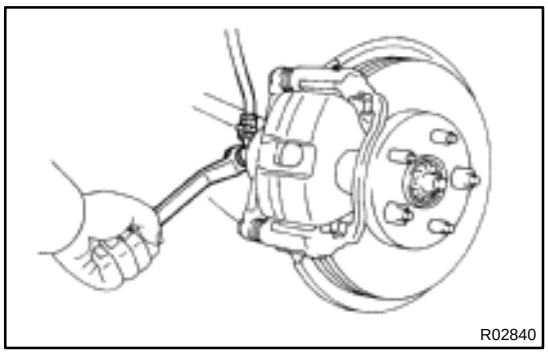

REMOVAL

1. REMOVE FRONT WHEEL

Torque: 103 N·m (1.050 kgf·cm, 76 ft·lbf)

2. DISCONNECT FLEXIBLE HOSE

(a) Remove the union bolt and 2 gaskets from the caliper, then disconnect the flexible hose from the caliper.

Torque: 29 N·m (300 kgf·cm, 21 ft·lbf)

HINT:

At the time of installation, please refer to the following item.

Install the flexible hose lock securely in the lock hole in the caliper.

(b) Use a container to catch the brake fluid as it drains out.

3. REMOVE CALIPER

(a) 5S–FE engine:

Hold the sliding pin and loosen the 2 installation bolts, and remove the installation bolts.

(b) 1MZ–FE engine:

Remove the 2 installation bolts.

Torque: 34 N·m (350 kgf·cm, 25 ft·lbf)

4. 5S–FE engine:

REMOVE 2 ANTI–SQUEAL SPRINGS

5. REMOVE 2 BRAKE PADS WITH ANTI–SQUEAL SHIMS

6. 1MZ–FE engine:

REMOVE 2 PAD SUPPORT PLATES

7. 5S–FE engine:

REMOVE 4 PAD SUPPORT PLATES

BR0AS–03

DISASSEMBLY

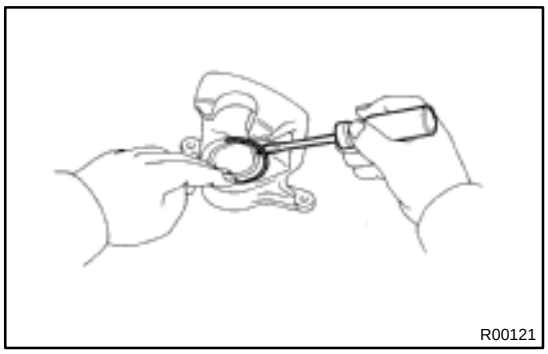
R00121

1. REMOVE SET RING AND CYLINDER BOOT

Using a screwdriver, remove the set ring and cylinder boot from the caliper.

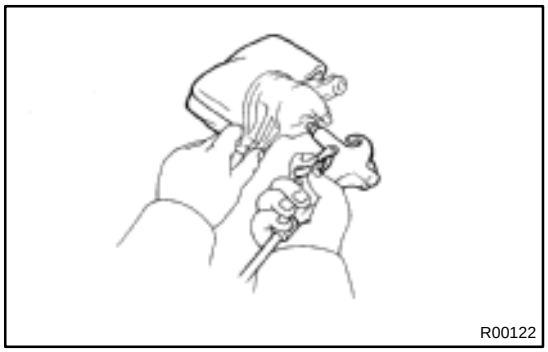
R00122

2. REMOVE PISTON

(a) Place a piece of cloth or similar, between the piston and the caliper.

(b) Use compressed air to remove the piston from the cylinder.

CAUTION:

Do not place your fingers in front of the piston when using compressed air.

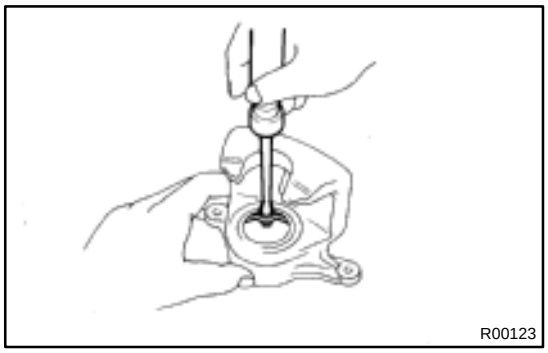
R00123

3. REMOVE PISTON SEAL

Using a screwdriver, remove the piston seal from the cylinder.

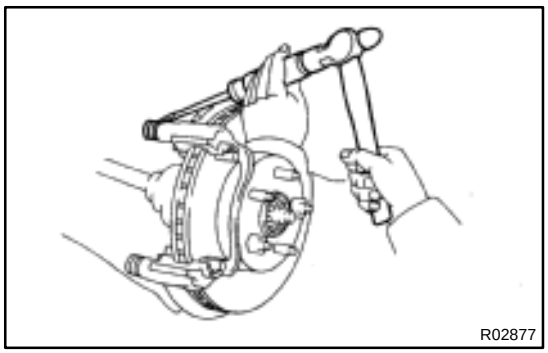
R02877

4. REMOVE SLIDING PINS AND DUST BOOTS

(a) Remove the 2 sliding pins from the torque plate.

NOTICE:

At the time of reassembly, please refer to the following item.

Insert the sliding pin with sliding bushing into the bottom side (5S–FE engine) or top side (1MZ–FE engine).

(b) Using a screwdriver and hammer, tap out the 2 dust boots.

HINT:

At the time of reassembly, please refer to the following item.

Use a 22 mm (5S–FE engine) or 24 mm (1MZ–FE engine) socket wrench and tap in 2 new dust boots into the torque plate.

NOTICE:

At the time of reassembly, please refer to the following item.

Check that the metal plate portion of the dust boot fits snugly in the torque plate.

BR0AT–03

INSPECTION

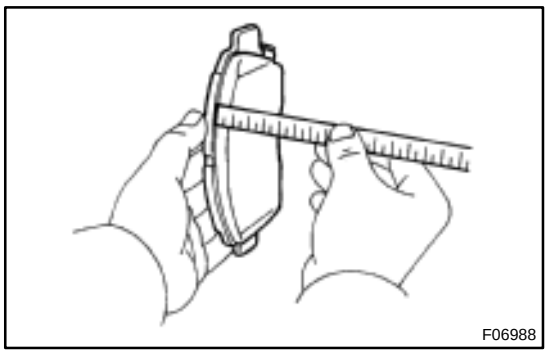
F06988

1. MEASURE PAD LINING THICKNESS

Using a ruler, measure the pad lining thickness.

Standard thickness:
5S–FE engine: 12.0 mm (0.472 in.)
1MZ–FE engine: 11.0 mm (0.433 in.)
Minimum thickness: 1.0 mm (0.039 in.)

Replace the pad if the pad's thickness is at the minimum thickness or less, or if the pad has severe and uneven wear.

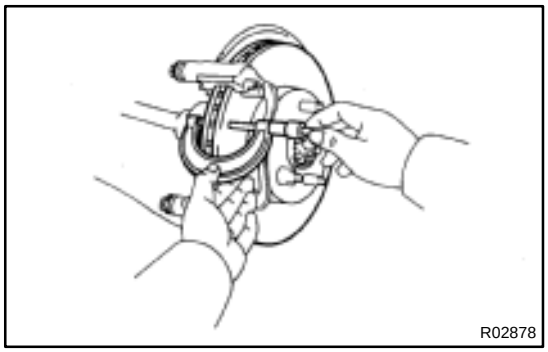
R02878

2. MEASURE DISC THICKNESS

Using a micrometer, measure the disc thickness.

Standard thickness: 28.0 mm (1.102 in.)
Minimum thickness: 26.0 mm (1.024 in.)

Replace the disc if the disc's thickness is at the minimum thickness or less. Replace the disc or grind it on a lathe if it is badly scored or worn unevenly.

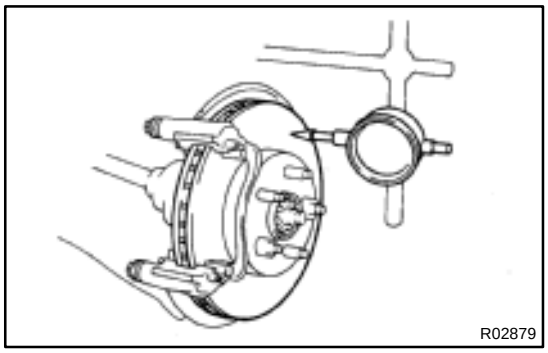
R02879

3. MEASURE DISC RUNOUT

Using a dial indicator, measure disc runout 10 mm (0.39 in.) away from the outer edge of the disc.

Maximum disc runout: 0.05 mm (0.0020 in.)

If the disc's runout is the maximum value or greater, check the bearing play in the axial direction and check the axle hub runout (See page SA–10). If the bearing play and axle hub runout are not abnormal, adjust the disc runout or grind it on a "On–Car" brake lathe.

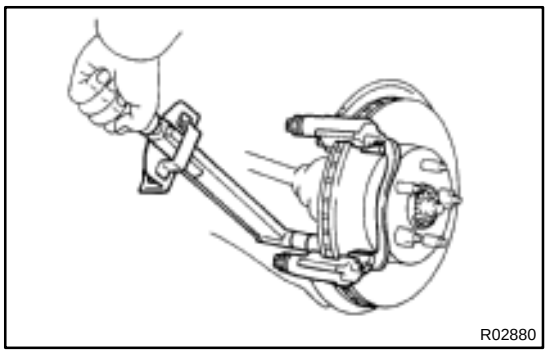
R02880

4. IF NECESSARY, ADJUST DISC RUNOUT

(a) Remove the torque plate from the knuckle.

(b) Remove the hub nuts and the disc. Reinstall the disc in the position turned 1/5 from its original position on the hub. Install and torque the hub nuts.
Remeasure the disc runout. Make a note of the runout and the disc's position on the hub.
Torque: 103 N·m (1,050 kgf·cm, 76 ft·lbf)

(c) Repeat (b) until the disc has been installed on the 3 remaining hub positions.

(d) If the minimum runout recorded in (b) and (c) is less than 0.05 mm (0.0020 in.), install the disc in that position.

(e) If the minimum runout recorded in (b) and (c) is greater than 0.05 mm (0.0020 in.), replace the disc and repeat step 3.

(f) Install the torque plate and torque the mounting bolts.
Torque: 107 N·m (1,090 kgf·cm, 79 ft·lbf)

BR0AU–01

REASSEMBLY

Reassembly is in the reverse order of disassembly (See page BR–27).

NOTICE:

Apply lithium soap base glycol grease to the parts indicated by arrows (See page BR–24).

BR0AV–02

INSTALLATION

Installation is in the reverse order of removal (See page BR–26).

HINT:

- After installation, fill the brake reservoir with brake fluid, bleed the brake system (See page BR–4).
- Check for leaks.

REAR DRUM BRAKE

COMPONENTS

BR0AW–03

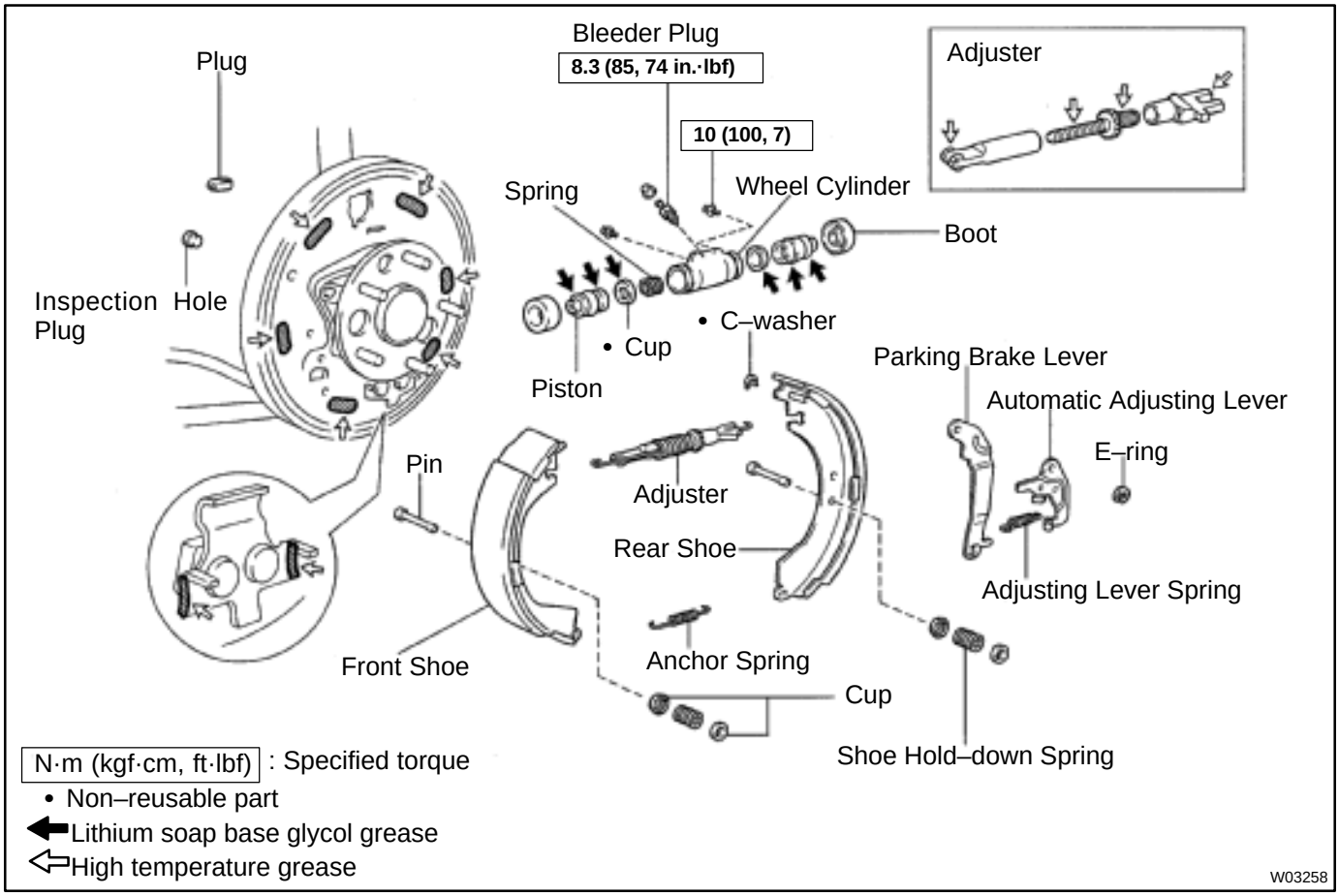

BR0AX–03

REMOVAL

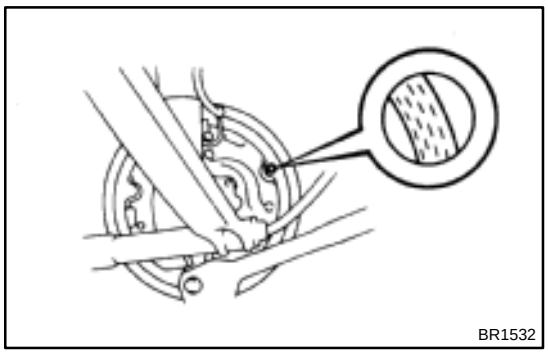

1. INSPECT SHOE LINING THICKNESS

Remove the inspection hole plug, and check the shoe lining thickness through the hole.

If less than the minimum, replace the shoes.

Minimum thickness: 1.0 mm (0.039 in.)

2. REMOVE REAR WHEEL

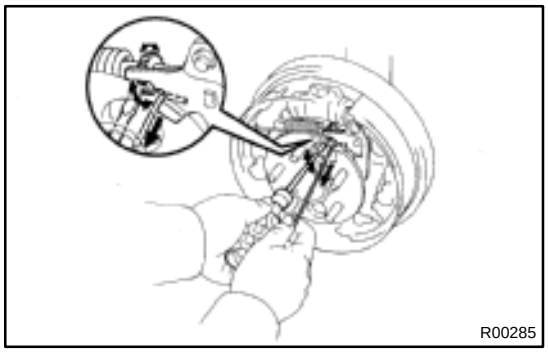

3. REMOVE BRAKE DRUM

(a) Release the parking brake lever and remove the brake drum.

HINT:

If the brake drum cannot be removed easily, do the following steps.

(b) Insert a bent wire or equivalent through the hole in the brake drum, and hold the automatic adjusting lever away from the adjuster.

(c) Using a screwdriver, reduce the brake shoe adjustment by turning the adjuster.

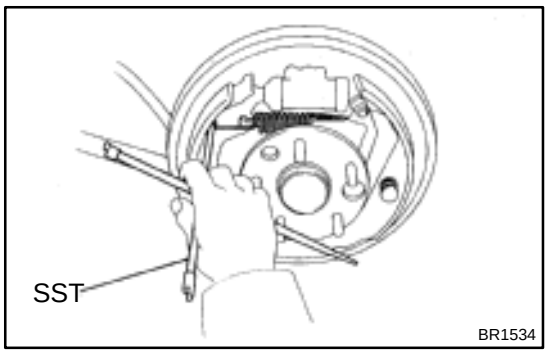

4. REMOVE FRONT SHOE

(a) Using SST, disconnect the return spring.
SST 09703–30010

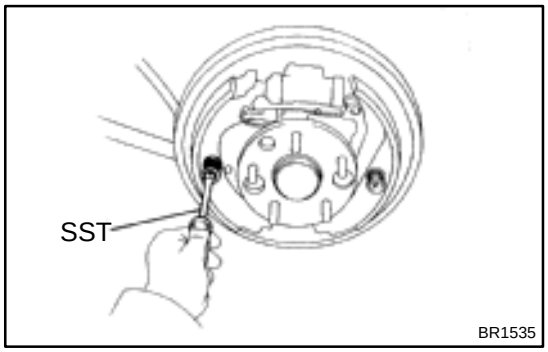

(b) Using SST, remove the shoe hold–down spring, 2 cups and pin.
SST 09718–00010

(c) Disconnect the anchor spring from the front shoe and remove the front shoe.

(d) Remove the anchor spring from the rear shoe.

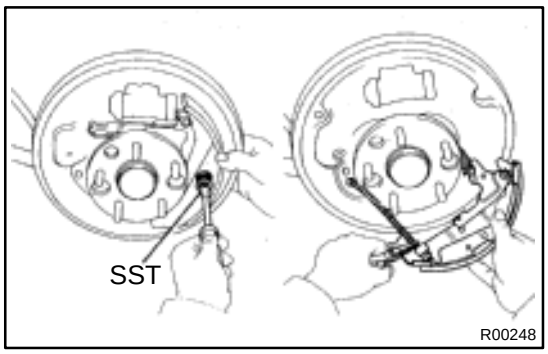

5. REMOVE REAR SHOE

(a) Using SST, remove the shoe hold–down spring, 2 cups and pin.
SST 09718–00010

(b) Using a screwdriver, disconnect the parking brake cable from the anchor plate.

(c) Using pliers, disconnect the parking brake cable from the lever and remove the rear shoe together with adjuster.

NOTICE:

Do not allow oil or grease on the rubbing face.

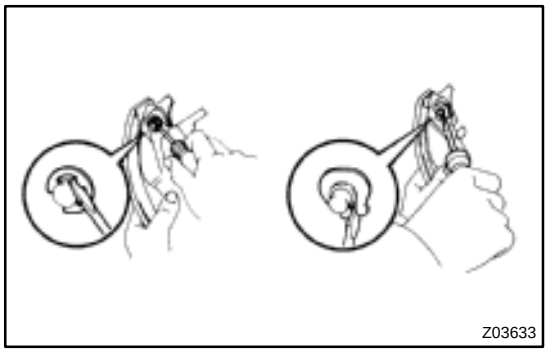

6. REMOVE ADJUSTER FROM REAR SHOE

(a) Remove the adjusting lever spring.

(b) Remove the adjuster together with the return spring.

7. REMOVE AUTOMATIC ADJUSTING LEVER AND PARKING BRAKE LEVER

(a) Remove the E–ring.

(b) Remove the automatic adjusting lever.

(c) Remove the C–washer.

(d) Remove the parking brake lever.

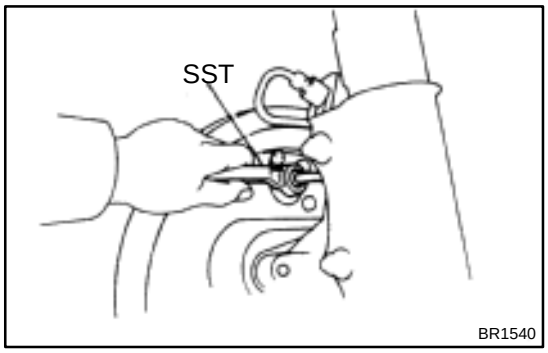

8. REMOVE WHEEL CYLINDER

(a) Using SST, disconnect the brake line. Use a container to catch the brake fluid.
Torque: 15 N·m (155 kgf·cm, 11 ft·lbf)
SST 09751–36011

(b) Remove the 2 bolts and the wheel cylinder.
Torque: 10 N·m (100 kgf·cm, 7 ft·lbf)

9. DISASSEMBLE WHEEL CYLINDER

(a) Remove the 2 boots.

(b) Remove the 2 pistons and springs.

(c) Remove the 2 piston cups.

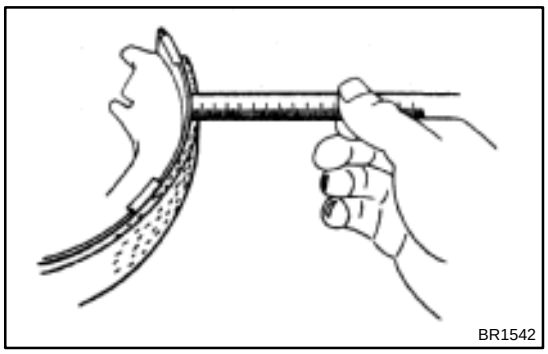
BR1542

INSPECTION

1. INSPECT DISASSEMBLED PARTS

Inspect the disassembled parts for wear, rust or damage.

2. MEASURE BRAKE SHOE LINING THICKNESS

Using a ruler, measure the shoe lining thickness.

Standard thickness: 5.0 mm (0.197 in.)

Minimum thickness: 1.0 mm (0.039 in.)

If the thickness is less than the minimum, or shows signs of uneven wear, replace the brake shoes.

HINT: BR0AY–03

If any of the brake shoes have to be replaced, replace all of the rear brake shoes in order to maintain even braking.

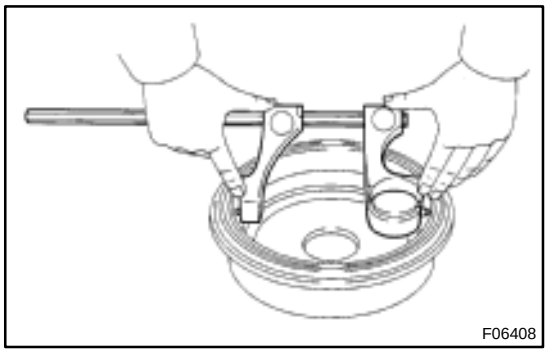
F06408

3. MEASURE BRAKE DRUM INSIDE DIAMETER

Using brake drum gauge or equivalent, measure the inside diameter of the drum.

Standard inside diameter: 228.6 mm (9.000 in.)

Maximum inside diameter: 230.6 mm (9.079 in.)

If the drum is scored or worn, the brake drum may be lathed to the maximum inside diameter.

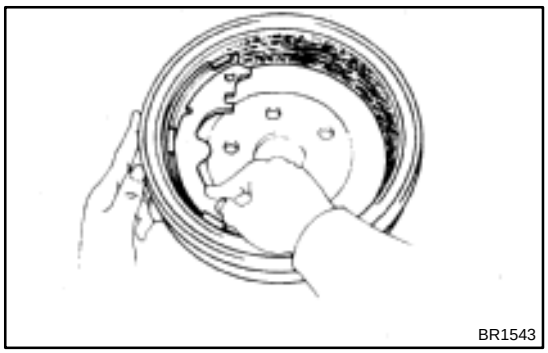
BR1543

4. INSPECT REAR BRAKE LINING AND DRUM FOR PROPER CONTACT

If the contact between the brake lining and drum is improper, repair the lining with a brake shoe grinder, or replace the brake shoe assembly.

BR0AZ–02

INSTALLATION

Installation is in the reverse order of removal (See page BR–32).

NOTICE:

Apply lithium soap base glycol grease and high temperature grease to the parts indicated by the arrows (See page BR–31).

1. **AFTER INSTALLATION, FILL BRAKE RESERVOIR WITH BRAKE FLUID, BLEED BRAKE SYSTEM (See page BR–4)**
2. **CHECK FOR LEAKS**

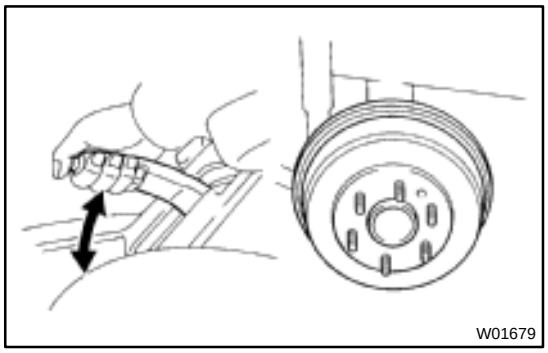
W01679

3. **CHECK OPERATION OF AUTOMATIC ADJUSTING MECHANISM**

(a) Move the parking brake lever of the rear shoe back and forth. Check that the adjuster turns.

If the adjuster does not turn, check for incorrect installation of the rear brake.

(b) Adjust the adjuster length as short as possible.

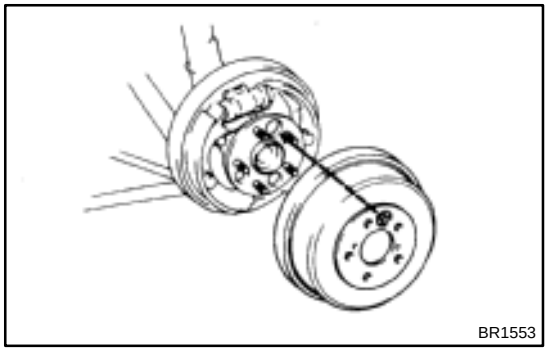
BR1553

(c) Align the adjusting hole on the brake drum and the largest hole on the axle carrier, install the brake drum.

(d) Pull the parking brake lever all the way up until a clicking sound can no longer be heard.

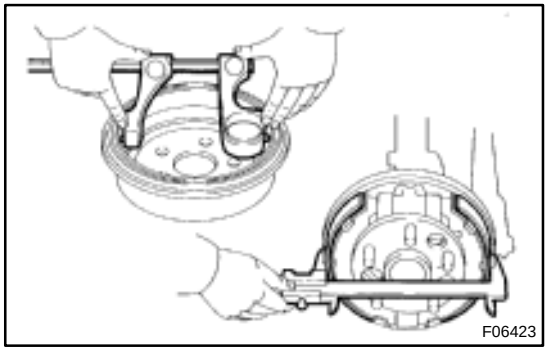
F06423

4. **CHECK CLEARANCE BETWEEN BRAKE SHOES AND DRUM**

(a) Remove the drum.

(b) Measure the brake drum inside diameter and diameter between the brake shoes. Check that the difference between the diameters is the correct shoe clearance.

Shoe clearance: 0.6 mm (0.024 in.)

If incorrect, check the parking brake system.

REAR BRAKE PAD

COMPONENTS

BR0B0–03

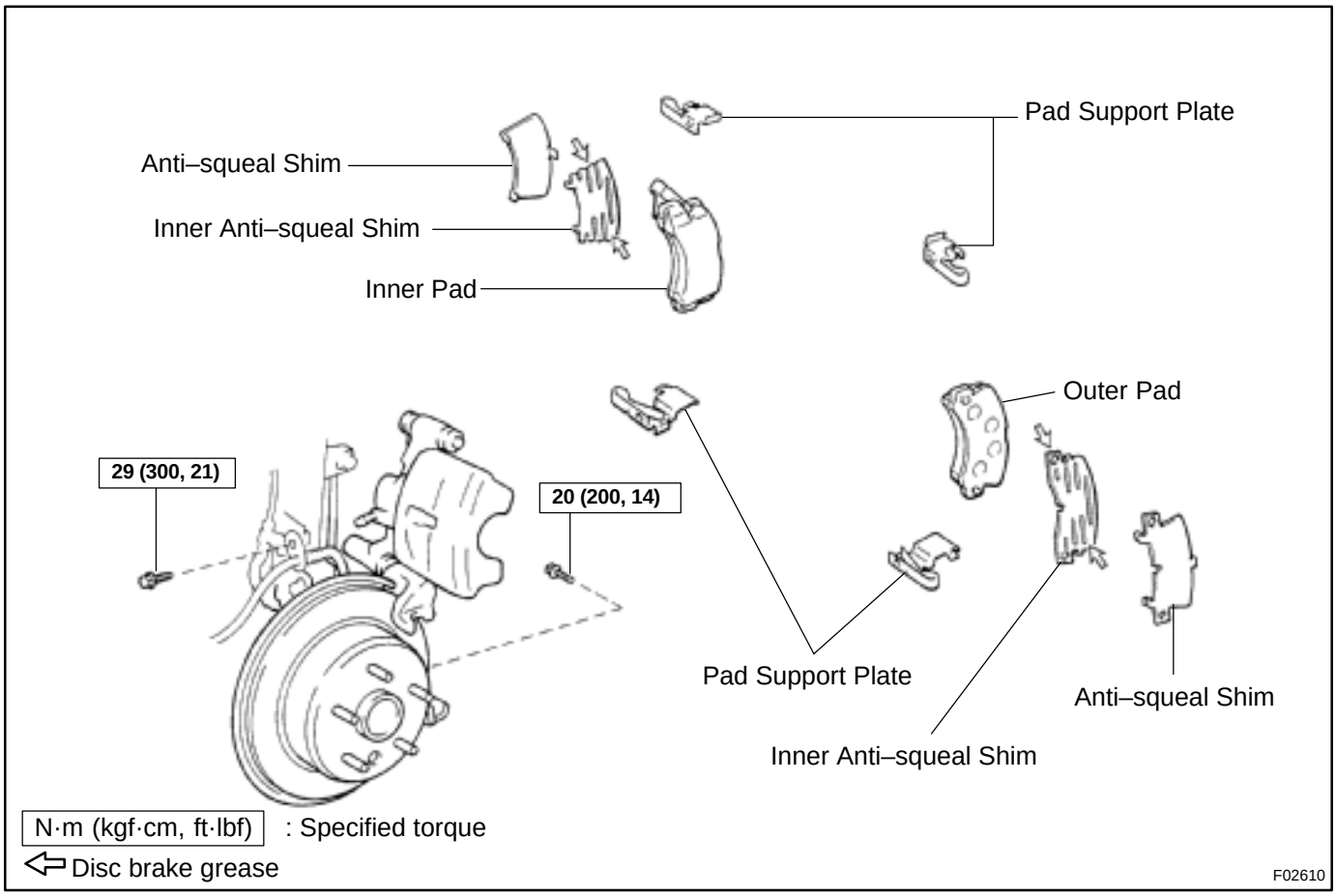

BR0B1–03

REPLACEMENT

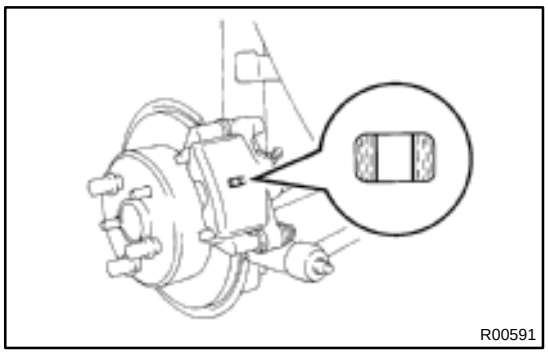
R00591

1. REMOVE REAR WHEEL

Remove the wheel and temporarily fasten the disc with the hub nuts.

2. INSPECT PAD LINING THICKNESS

Check the pad thickness through the caliper inspection hole and replace pads if not within specification.

Minimum thickness: 1.0 mm (0.039 in.)

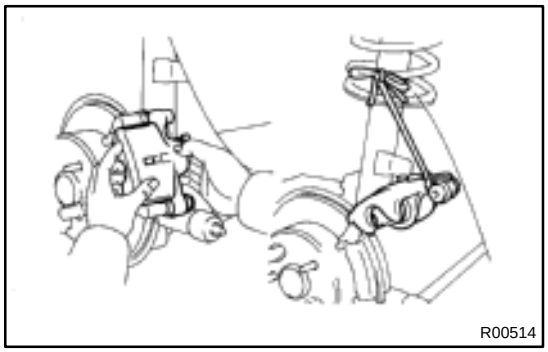
R00514

3. LIFT UP CALIPER

(a) Remove the bolt and flexible hose from the bracket.
(b) Remove the installation bolt from the torque plate.
(c) Lift up the caliper and suspend it securely.

HINT:
Do not disconnect the flexible hose.

4. REMOVE 2 BRAKE PADS

5. REMOVE 4 ANTI–SQUEAL SHIMS

6. REMOVE 4 PAD SUPPORT PLATES

NOTICE:

The support plates can be used again provided that they have sufficient rebound, no deformation, cracks or wear, and have had all rust, dirt and foreign particles cleaned off.

7. CHECK DISC THICKNESS AND RUNOUT

(See page BR–42)

8. INSTALL 4 PAD SUPPORT PLATES

9. INSTALL NEW PADS

NOTICE:

When replacing worn pads, the anti–squeal shims must be replaced together with the pads.

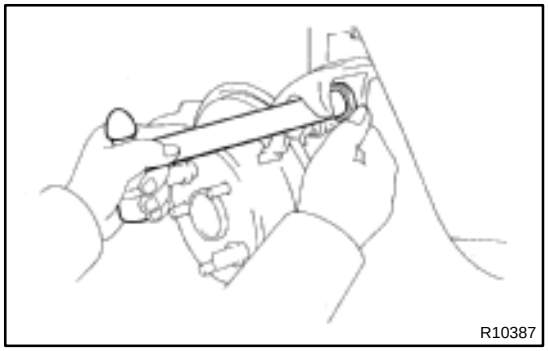
R10387

(a) Apply disc brake grease to both side of the inner anti–squeal shims (See page BR–36).
(b) Install the 2 anti–squeal shims on each pad.
(c) Install 2 pads with the pad wear indicator plate facing upward.

NOTICE:

There should be no oil or grease adhering to the friction surfaces of the pads or the disc.

10. INSTALL CALIPER

(a) Draw out a small amount of brake fluid from the reservoir.
(b) Press in the piston with a hammer handle or similar implement.

HINT:
If the piston is difficult to push in, loosen the bleeder plug and push in the piston while letting some brake fluid escape.

(c) Install the caliper and torque the installation bolt.
Torque: 20 N·m (200 kgf·cm, 14 ft·lbf)
(d) Install the flexible hose and bolt to the bracket.
Torque: 29 N·m (300 kgf·cm, 21 ft·lbf)

11. INSTALL REAR WHEEL
Torque: 103 N·m (1.050 kgf·cm, 76 ft·lbf)

12. DEPRESS BRAKE PEDAL SEVERAL TIMES

13. CHECK THAT FLUID LEVEL IS AT MAX LINE

REAR BRAKE CALIPER

BR0B2–03

COMPONENTS

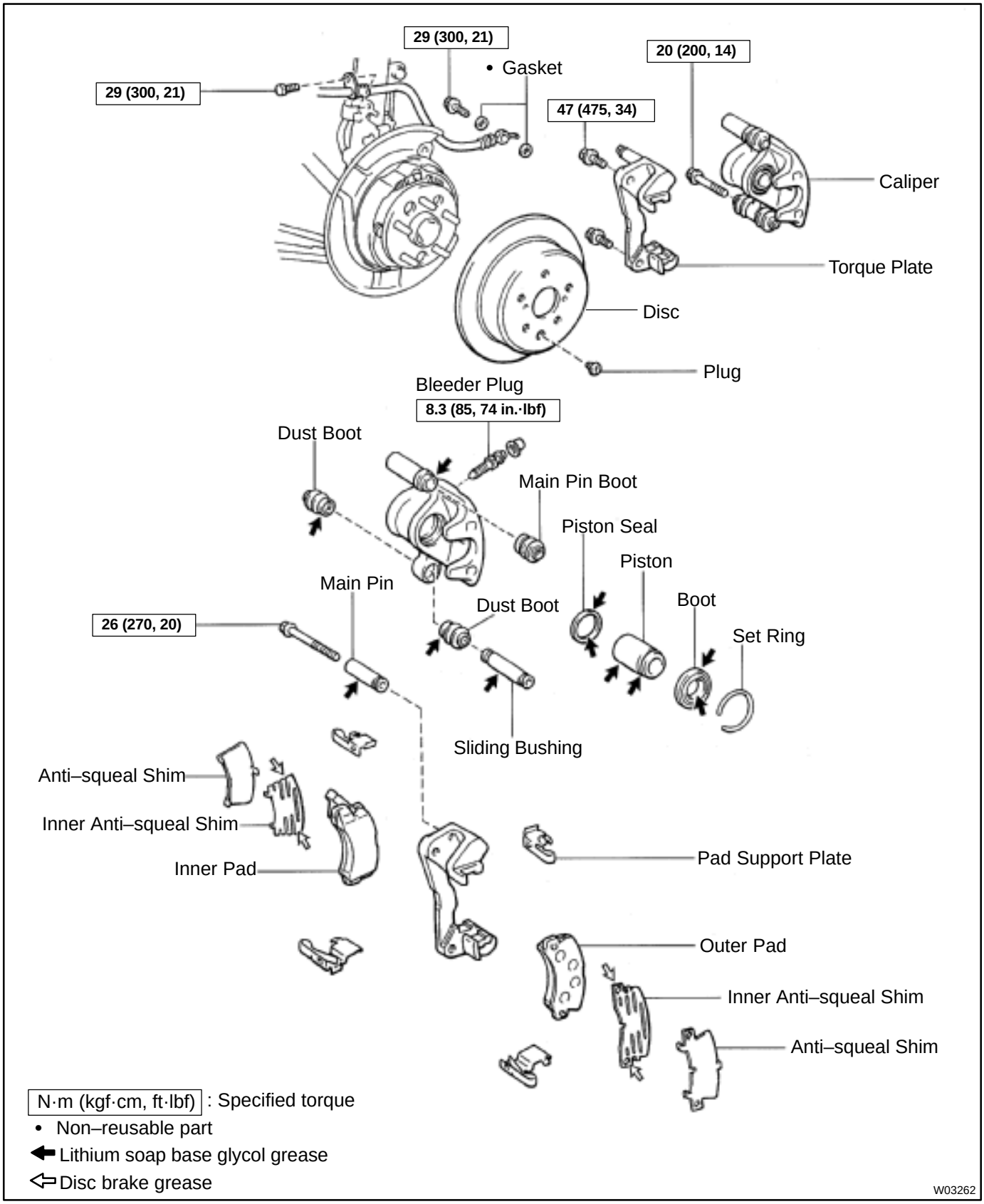

BR0B3–03

REMOVAL

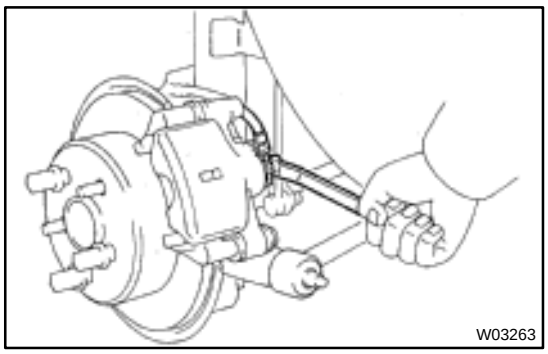

1. REMOVE REAR WHEEL

Torque: 103 N·m (1.050 kgf·cm, 76 ft·lbf)

2. DISCONNECT FLEXIBLE HOSE

(a) Remove the union bolt and 2 gaskets from the caliper, then disconnect the flexible hose from the caliper.

Torque: 29 N·m (300 kgf·cm, 21 ft·lbf)

HINT:

At the time of installation, please refer to the following item.

Insert the flexible hose lock securely in the lock hole in the caliper.

(b) Use a container to catch the brake fluid as it drains out.

3. REMOVE CALIPER

(a) Remove the installation bolt.

Torque: 20 N·m (200 kgf·cm, 14 ft·lbf)

(b) Remove the caliper from the torque plate.

4. REMOVE 2 BRAKE PADS WITH 4 ANTI–SQUEAL SHIMS

5. REMOVE 4 PAD SUPPORT PLATES

NOTICE:

At the time of installation, please refer to the following item. There should be no oil or grease adhering to the friction surfaces of the pads or disc.

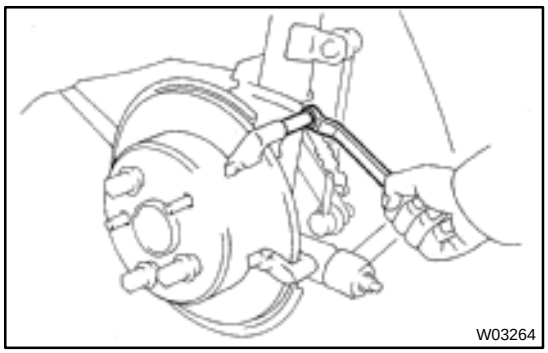

6. REMOVE MAIN PIN

Loosen the main pin installation bolt and remove the main pin.

Torque: 26 N·m (270 kgf·cm, 20 ft·lbf)

BR0B4–02

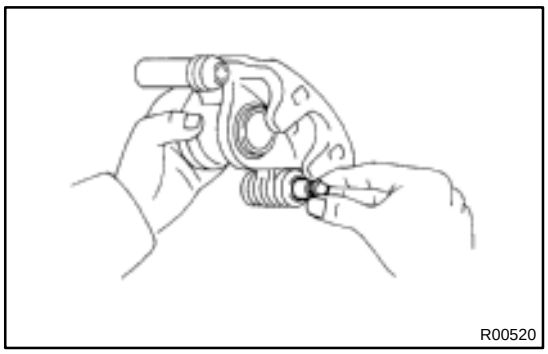
R00520

DISASSEMBLY

1. REMOVE SLIDING BUSHING
2. REMOVE 2 DUST BOOTS
3. REMOVE MAIN PIN BOOT

NOTICE:

Ensure that the boots are secured firmly to the bushing and caliper grooves.

4. REMOVE CYLINDER BOOT SET RING AND BOOT (See step 1 on page BR–27)
5. REMOVE PISTON (See step 2 on page BR–27)
6. REMOVE PISTON SEAL (See step 3 on page BR–27)

BR0B5–02

INSPECTION

1. MEASURE PAD LINING THICKNESS
(See step 1 on page BR–28)
Standard thickness: 10.0 mm (0.394 in.)
Minimum thickness: 1.0 mm (0.039 in.)

2. MEASURE DISC THICKNESS
(See step 2 on page BR–28)
Standard thickness: 10.0 mm (0.394 in.)
Minimum thickness: 9.0 mm (0.354 in.)

3. MEASURE DISC RUNOUT
(See step 3 on page BR–28)
Maximum disc runout: 0.15 mm (0.0059 in.)

If the disc's runout is maximum value or greater, check the bearing play in the axial direction and check the axle hub runout (See page SA–52). If the bearing play and axle hub runout are not abnormal, adjust the disc runout or grind it on a "On–Car" brake lathe.

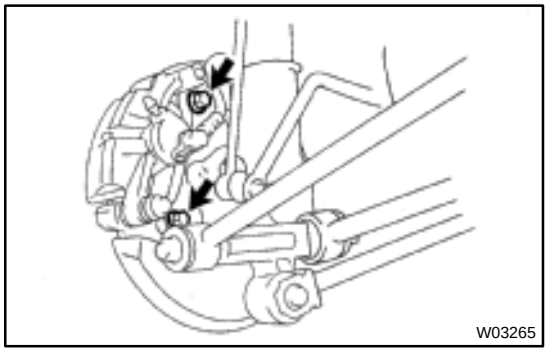
W03265

4. IF NECESSARY, ADJUST DISC RUNOUT

(a) Remove the 2 bolts and torque plate.

(b) Remove the hub nuts and the disc. Reinstall the disc in the position turned 1/5 from its original position on the hub. Install and torque the hub nuts.
Remeasure the disc runout. Make a note of the runout and the disc's position on the hub.
Torque: 103 N·m (1,050 kgf·cm, 76 ft·lbf)

(c) Repeat (b) until the disc has been installed on the 3 remaining hub positions.

(d) If the minimum runout recorded in (b) and (c) is less than 0.15 mm (0.0059 in.), install the disc in that position.

(e) If the minimum runout recorded in (b) and (c) is greater than 0.15 mm (0.0059 in.), replace the disc and repeat step 3.

(f) Install the torque plate and torque the mounting bolts.
Torque: 47 N·m (475 kgf·cm, 34 ft·lbf)

BR0B6–01

REASSEMBLY

Reassembly is in the reverse order of disassembly (See page BR–41).

NOTICE:

Apply lithium soap base glycol grease to the parts indicated by the arrows (See page BR–24).

BR0B7–02

INSTALLATION

Installation is in the reverse order of removal (See page BR–40).

HINT:

- After installation, fill the brake reservoir with brake fluid and bleed the brake system (See page BR–4).
- Check for leaks.

PARKING BRAKE

BR0B8–03

COMPONENTS

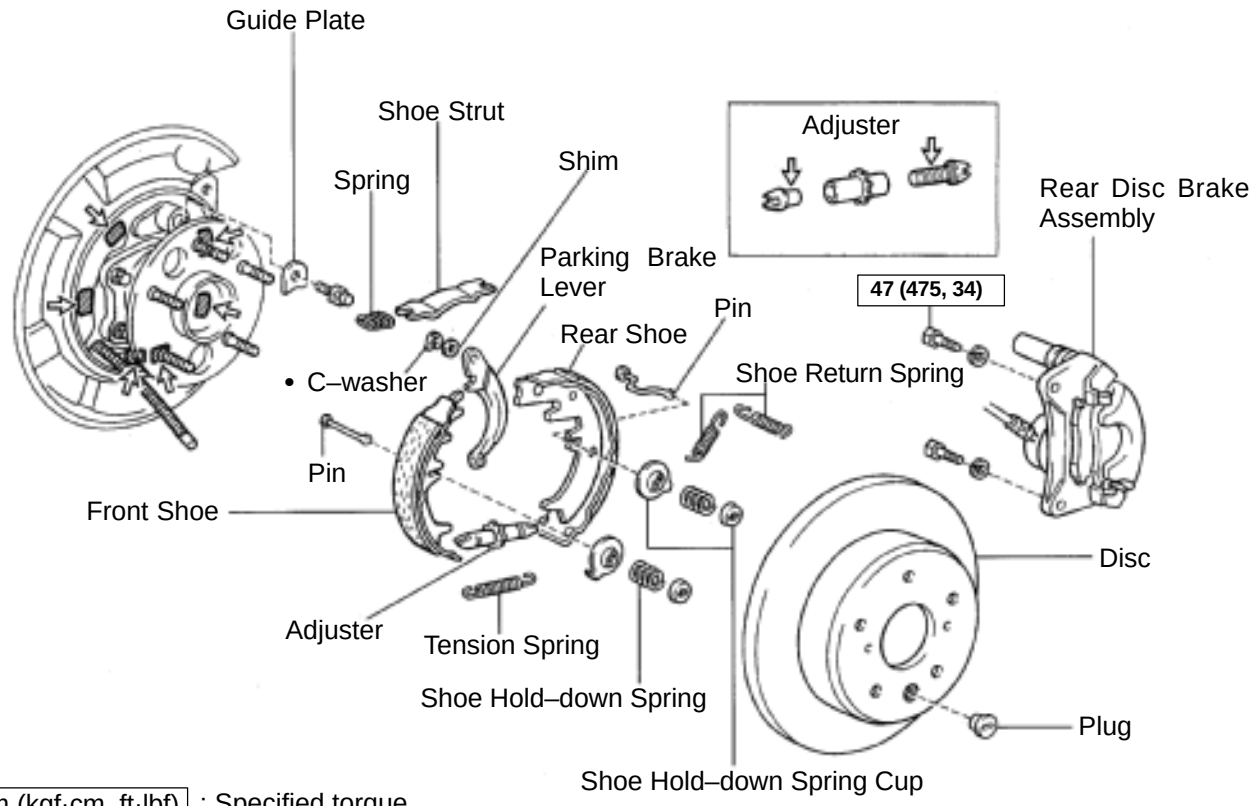

N·m (kgf·cm, ft·lbf) : Specified torque

• Non–reusable part

⇦ High temperature grease

W03275

BR0B9–03

DISASSEMBLY

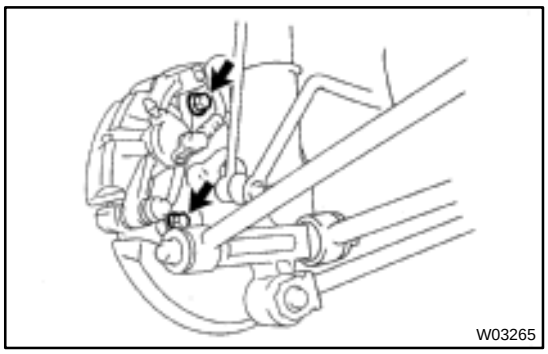
W03265

1. REMOVE REAR WHEEL

Torque: 103 N·m (1.050 kgf·cm, 76 ft·lbf)

2. REMOVE REAR DISC BRAKE ASSEMBLY

(a) Remove the 2 mounting bolts and remove the disc brake assembly.

Torque: 47 N·m (475 kgf·cm, 34 ft·lbf)

(b) Suspend the disc brake securely. Ensure that the hose is not stretched.

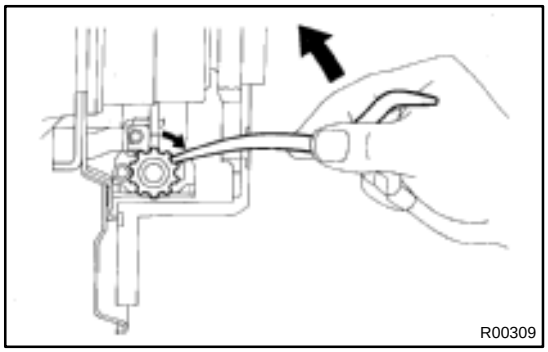
R00309

3. REMOVE DISC

Release the parking brake lever and remove the disc.

HINT:

If the disc cannot be removed easily, turn the shoe adjuster until the wheel turns freely.

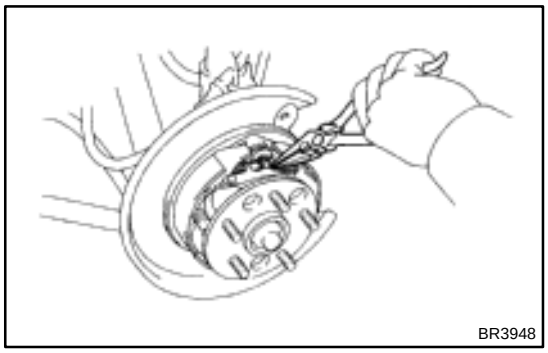
BR3948

4. REMOVE SHOE RETURN SPRINGS

Using needle–nose pliers, remove the shoe return springs.

5. REMOVE FRONT SHOE ADJUSTER AND TENSION SPRING

(a) Slide out the front shoe and remove the shoe adjuster.

(b) Remove the shoe strut with the spring.

(c) Remove the shoe hold–down spring cups, spring and pin.

(d) Disconnect the tension spring and remove the front shoe.

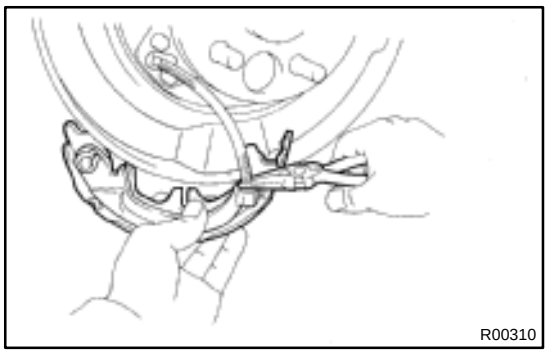
R00310

6. REMOVE REAR SHOE

(a) Slide out the rear shoe.

(b) Remove the tension spring from the rear shoe.

(c) Remove the shoe hold–down spring cups, spring and pin.

(d) Using needle–nose pliers, disconnect the parking brake cable from the parking brake shoe lever.

BR0BA–02

INSPECTION

1. INSPECT DISASSEMBLED PARTS

Inspect the disassembled parts for wear, rust or damage.

2. MEASURE BRAKE SHOE LINING THICKNESS

(See step 2 on page BR–34)

Standard thickness: 2.0 mm (0.079 in.)

Minimum thickness: 1.0 mm (0.039 in.)

3. MEASURE DISC INSIDE DIAMETER

(See step 3 on page BR–34)

Standard inside diameter: 170 mm (6.69 in.)

Maximum inside diameter: 171 mm (6.73 in.)

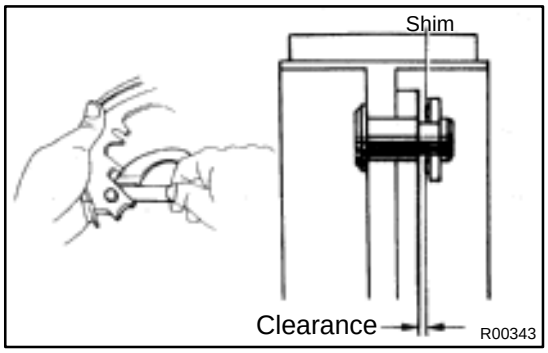

4. INSPECT PARKING BRAKE LINING AND DISC FOR PROPER CONTACT (See step 4 on page BR–34)

5. MEASURE CLEARANCE BETWEEN PARKING BRAKE SHOE AND LEVER

Using a feeler gauge, measure the clearance.

Standard clearance: Less than 0.35 mm (0.0138 in.)

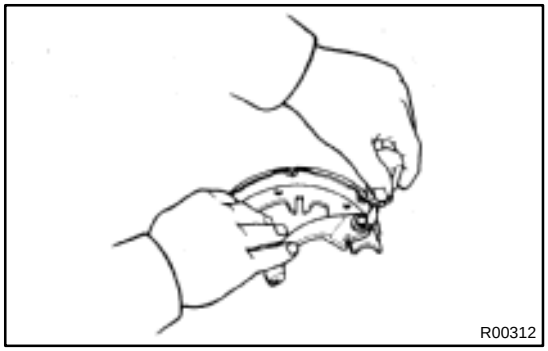

If the clearance is not within the specification, replace the shim with one of the correct size.

Shim Thickness	Shim Thickness
0.3 mm (0.012 in.)	0.9 mm (0.035 in.)
0.6 mm (0.024 in.)	–

6. IF NECESSARY, REPLACE SHIM

(a) Using a screwdriver, remove the C–washer and shim.

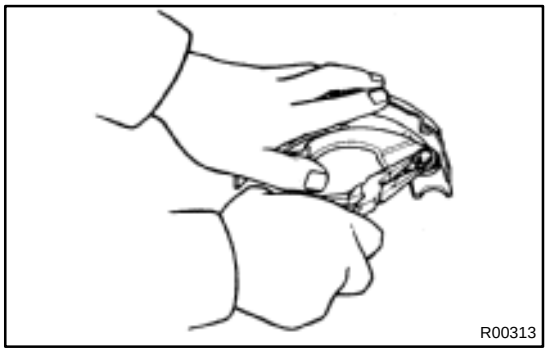

(b) Install the correct size shim with a new C–washer.

(c) Remeasure the clearance.

BR0BB–02

REASSEMBLY

Reassembly is in the reverse order of disassembly (See page BR–46).

NOTICE:

Apply high temperature grease to the parts indicated by the arrows (See page BR–45).

1. ADJUST PARKING BRAKE SHOE CLEARANCE

(a) Temporarily install the hub nuts.

(b) Remove the hole plug.

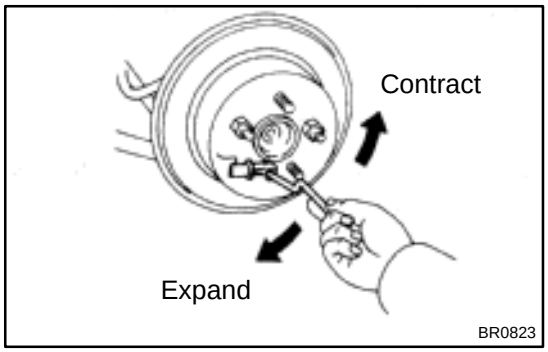

(c) Turn the adjuster and expand the shoes until the disc locks.

(d) Return the adjuster 8 notches.

(e) Install the hole plug.

2. SETTLING PARKING BRAKE SHOES AND DISC

(a) With the parking brake release button pushed in, pull the lever with 98 N (10 kgf, 22 lbf) of force.

(b) Drive the vehicle at about 50 km/h (31 mph) on a safe, level and dry road for about 400 meters (0.25 mile) in this condition.

(c) Repeat this procedure 2 or 3 times.

3. RECHECK AND ADJUST PARKING BRAKE LEVER TRAVEL (See page BR–8)

PROPORTIONING VALVE (P VALVE)

INSPECTION

BR0BC–03

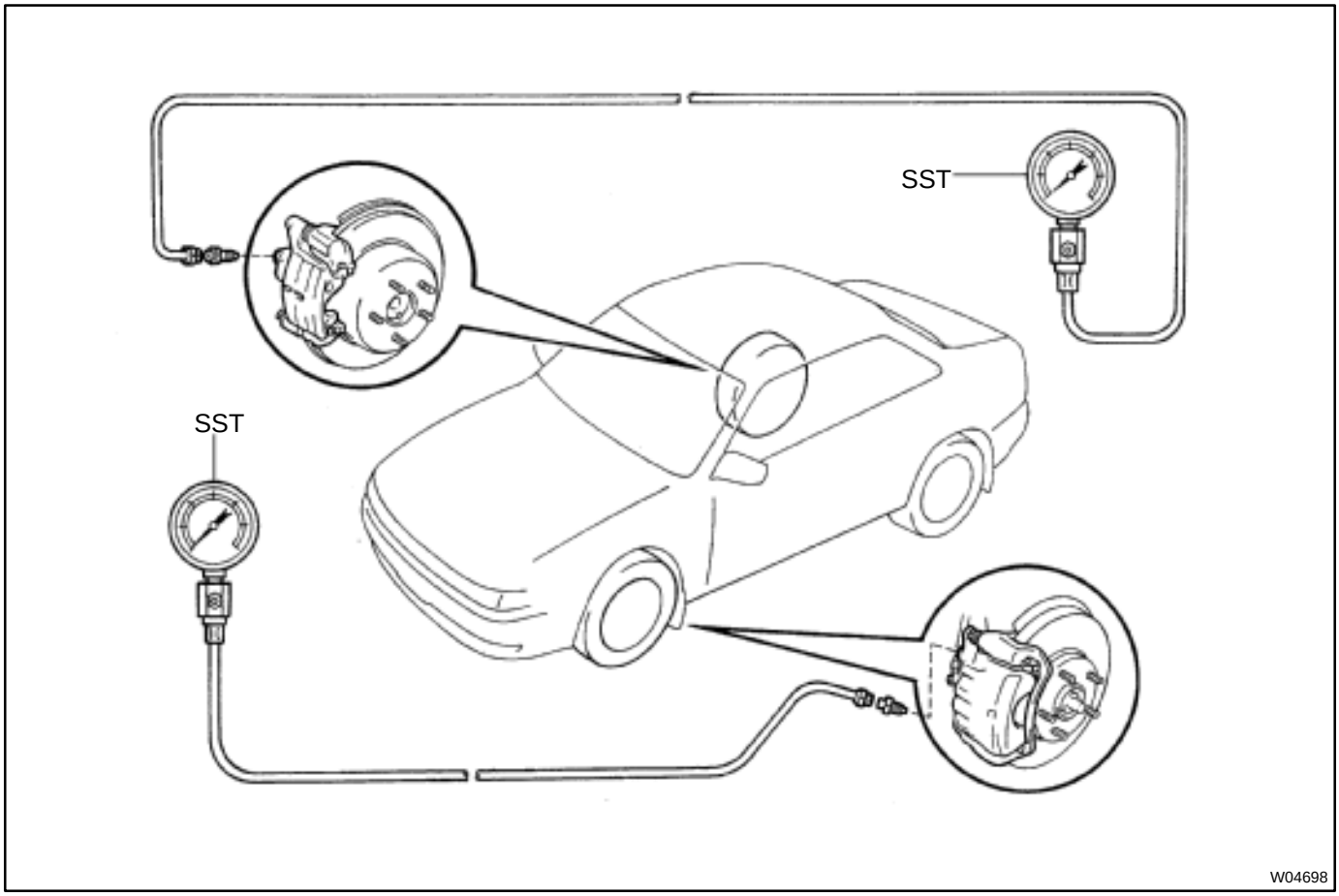

1. **INSTALL LSPV GAUGE (SST)**
   SST 09709–29018
2. **BLEED AIR FROM FLUID PRESSURE GAUGE**
3. **RAISE MASTER CYLINDER PRESSURE AND CHECK REAR WHEEL CYLINDER OR CALIPER PRESSURE**

Master cylinder fluid pressure	Rear brake cylinder fluid pressure
5S–FE engine:	
2,452 kPa (25 kgf/cm^2, 356 psi)	2,452 kPa (25 kgf/cm^2, 356 psi)
7,845 kPa (80 kgf/cm^2, 1,138 psi)	4,413 kPa (45 kgf/cm^2, 640 psi)
1MZ–FE engine:	
2,942 kPa (30 kgf/cm^2, 427 psi)	2,942 kPa (30 kgf/cm^2, 427 psi)
7,845 kPa (80 kgf/cm^2, 1,138 psi)	5,982 kPa (61 kgf/cm^2, 868 psi)

If the rear brake cylinder pressure is incorrect, replace the P valve assembly.

4. **REMOVE LSPV GAUGE (SST) AND BLEED BRAKE SYSTEM (See page BR–4)**
5. **CHECK FOR LEAKS**

ABS ACTUATOR (DENSO Made)

BR0BD–02

ON–VEHICLE INSPECTION

HINT:

Using the ABS actuator checker (SST), check the operation of the actuator. If the actuator does not operate, check the operation of sub–wire harness G according to the instructions on pages DI–502 and DI–507. If the solenoid and/or pump motor relay are abnormal, replace the relay and inspect the actuator operation again.

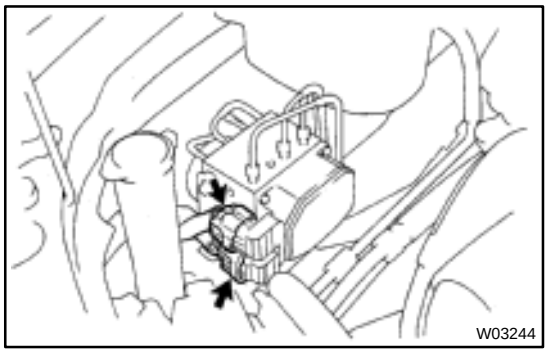

1. INSPECT BATTERY POSITIVE VOLTAGE

Battery positive voltage: 10 – 14 V

2. DISCONNECT CONNECTORS

Disconnect the 2 connectors from the actuator.

3. CONNECT ACTUATOR CHECKER (SST)

(a) Connect the actuator checker (SST) to the actuator side wire harness via the sub–wire harness (SST), as shown.

SST 09990–00150, 09990–00250, 09990–00300, 09990–00360

(b) Connect the red cable of the checker to the battery positive (+) terminal and black cable to the negative (–) terminal. Connect the black cable of the sub–wire harness to the battery negative (–) terminal or body ground.

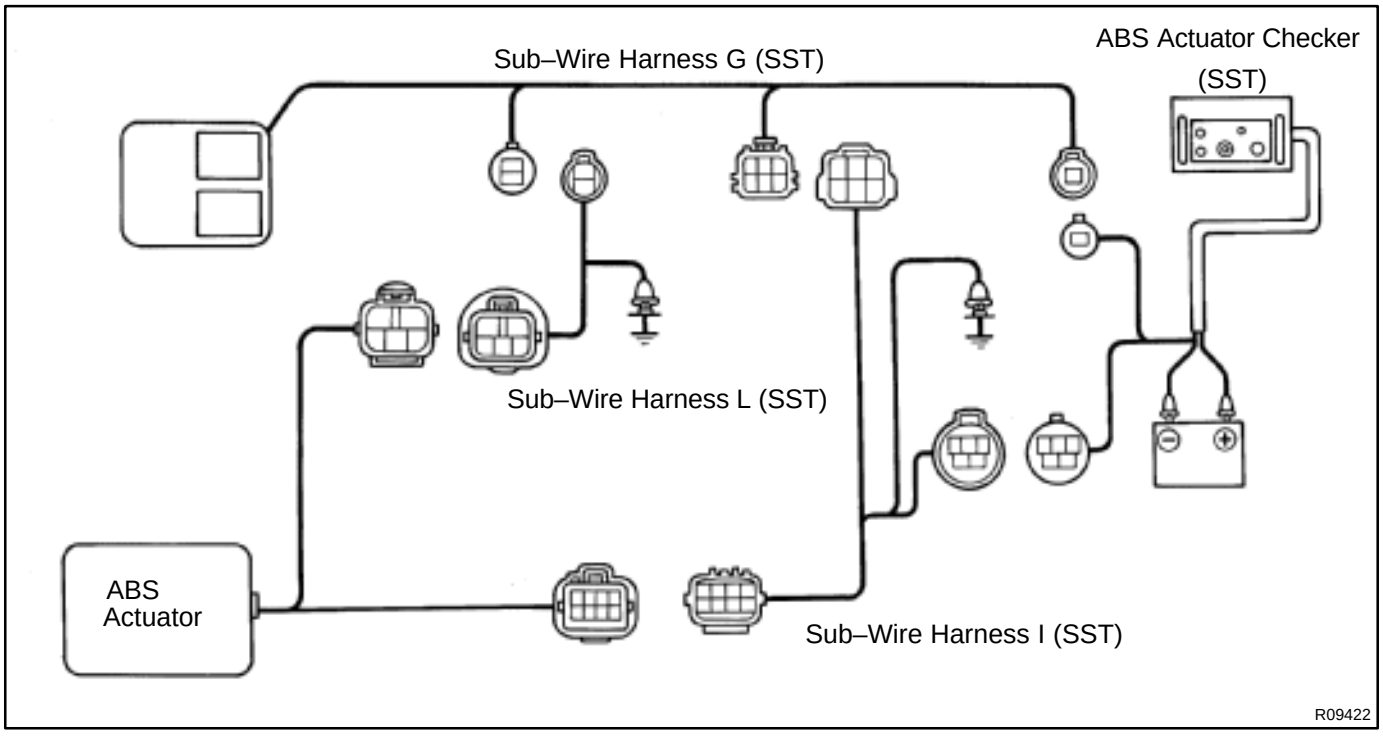

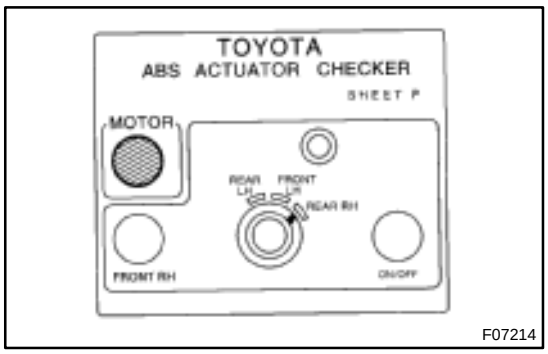

(c) Place the ”SHEET P” (SST) on the actuator checker.
SST SST 09990–00430

4. INSPECT BRAKE ACTUATOR OPERATION

(a) Start the engine, and run it at idle.

(b) Turn the selector switch of the actuator checker to ”FRONT LH” position.

(c) Push and hold in the MOTOR switch for a few seconds.

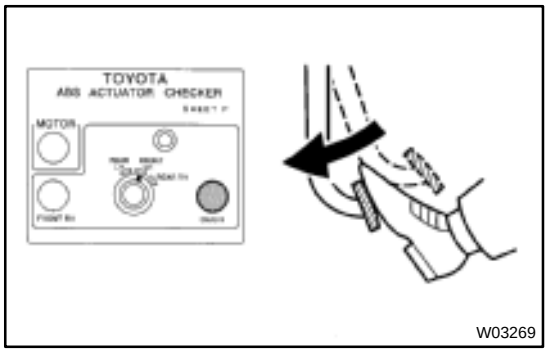

(d) Depress the brake pedal and hold it until step (g) is completed.

(e) Push the MAIN push switch, and check that the brake pedal does not go down.

NOTICE:

Do not keep the MAIN push switch pushed down for more than 10 seconds.

(f) Release the switch, and check that the pedal goes down.

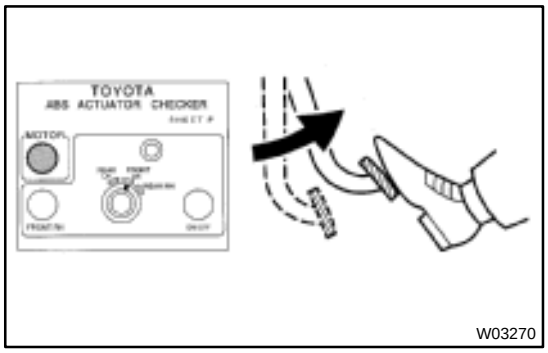

(g) Push and hold in the MOTOR switch for a few seconds, and check that the pedal returns.

(h) Release the brake pedal.

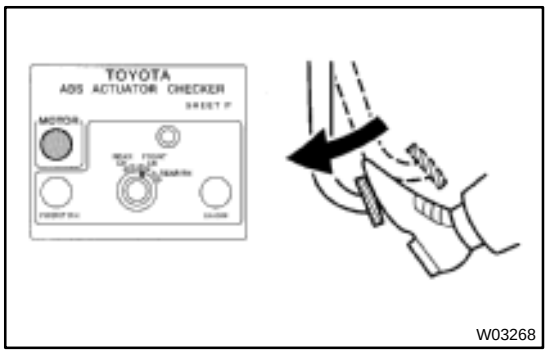

(i) Push and hold in the MOTOR switch for a few seconds.

(j) Depress the brake pedal and hold it for about 15 seconds. As you hold the pedal down, push the MOTOR switch for a few seconds. Check that the brake pedal does not pulsate.

(k) Release the brake pedal.

(l) Turn the selector switch to ”REAR RH” position.

(m) Repeat (c) to (j), checking the actuator operation similarly.

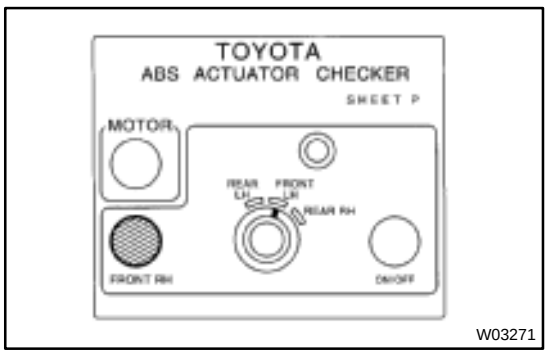

(n) Similarly, inspect ”REAR LH” and ”FRONT RH” position.

HINT:

When inspecting ”FRONT RH” position, push the FRONT RH switch instead of the MAIN push switch, and you can inspect in any selector switch position.

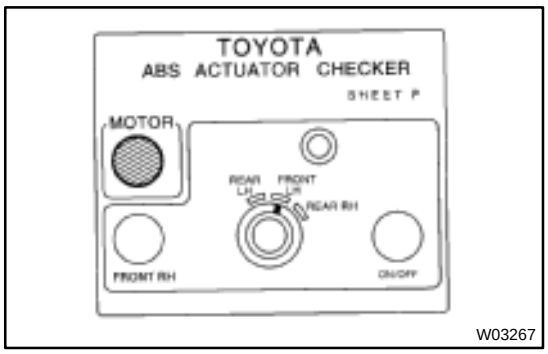

(o) Push and hold in the MOTOR switch for a few seconds.
(p) Stop the engine.

5. DISCONNECT ACTUATOR CHECKER (SST) FROM ACTUATOR

Remove the "SHEET P" (SST) and disconnect the actuator checker (SST) and sub–wire harness (SST) from the actuator.

SST 09990–00150, 09990–00250, 09990–00300, 09990–00360, 09990–00430

6. CONNECT CONNECTORS

Connect the 2 connectors to the actuator.

7. CLEAR DTC (See page DI–493)

BR0BE–02

COMPONENTS

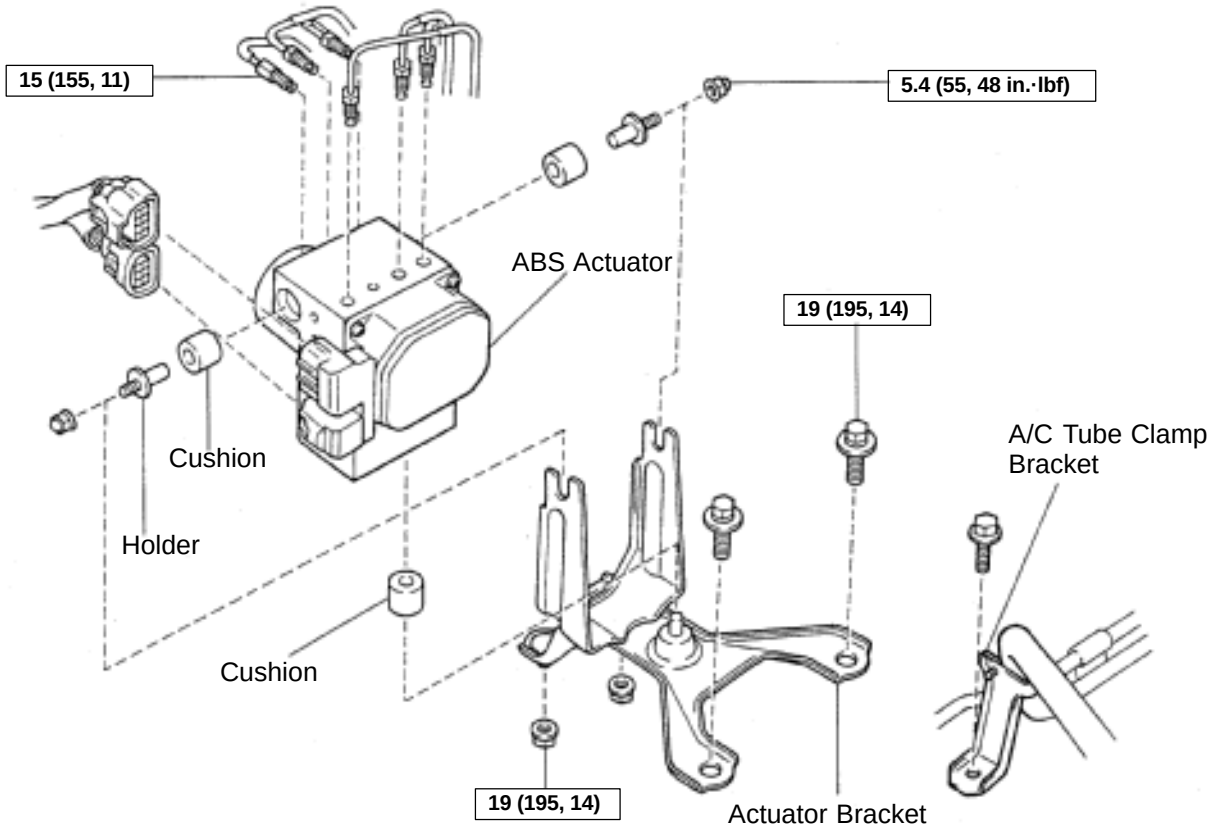

N·m (kgf·cm, ft·lbf) : Specified torque

W03266

BR0BF–02

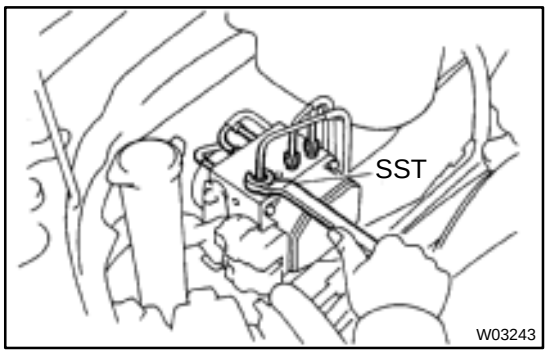

REMOVAL

1. REMOVE RIGHT FRONT FENDER LINER

2. REMOVE A/C TUBE CLAMP BRACKET BOLT

3. DISCONNECT BRAKE LINES

Using SST, disconnect the 6 brake lines from the ABS actuator.

SST 09751–36011

Torque: 15 N·m (155 kgf·cm, 11 ft·lbf)

4. REMOVE ABS ACTUATOR ASSEMBLY

(a) Disconnect the 2 connectors.

(b) Remove the 2 blots, 2 nuts and ABS actuator assembly.

Torque: 19 N·m (195 kgf·cm, 14 ft·lbf)

5. REMOVE ABS ACTUATOR

(a) Remove the 2 nuts and ABS actuator from actuator bracket.

Torque: 5.4 N·m (55 kgf·cm, 48 in.·lbf)

(b) Remove the 2 holders and 3 cushions from the ABS actuator.

BR0BG–02

INSTALLATION

Installation is in the reverse order of removal (See page BR–54).

HINT:

- After installation, fill the brake reservoir with brake fluid, bleed the brake system (See page BR–4).
- Check for leaks.

ABS ACTUATOR (BOSCH Made)

BR0BH–03

COMPONENTS

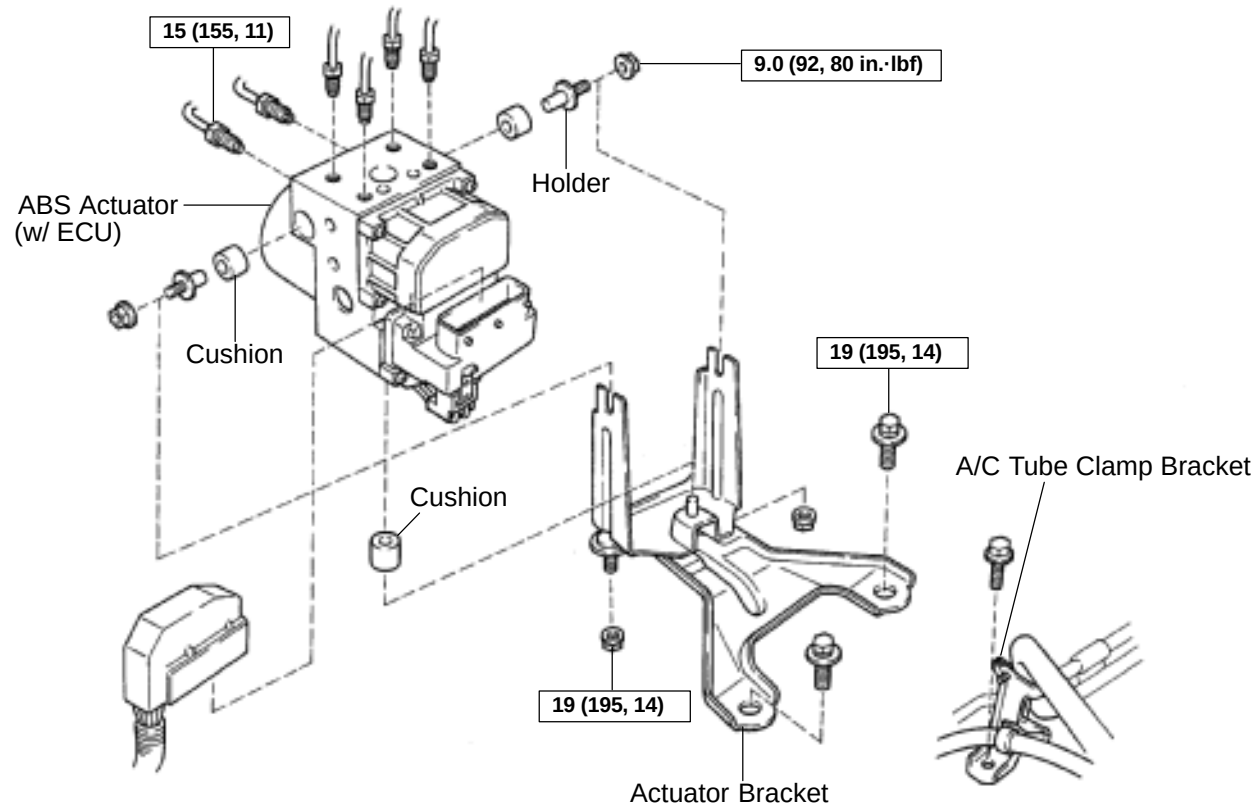

N·m (kgf·cm, ft·lbf) : Specified torque

W03327

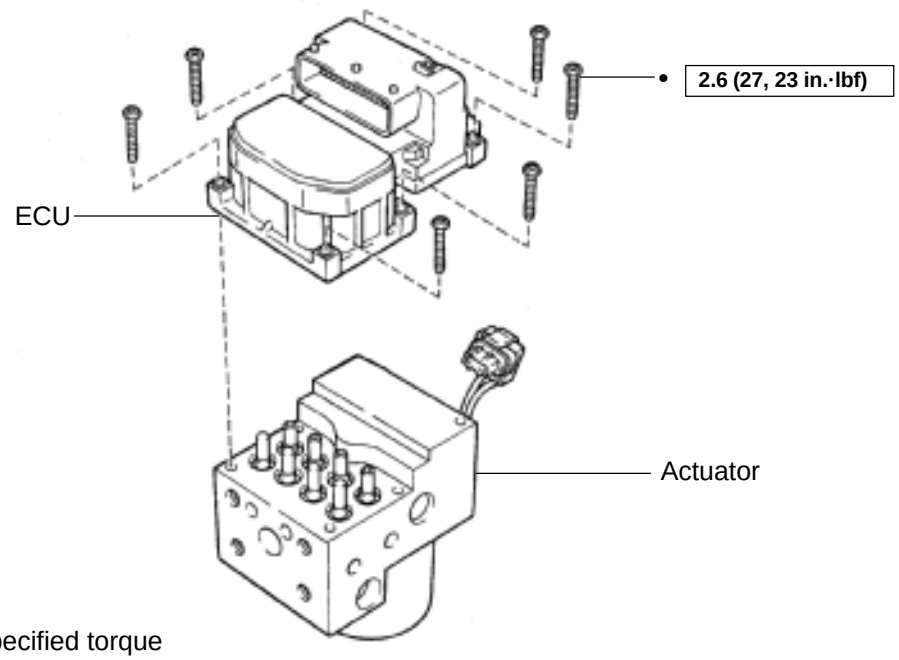

N·m (kgf·cm, ft·lbf) : Specified torque

• Non–reusable part

F07215

BR0BI–03

REMOVAL

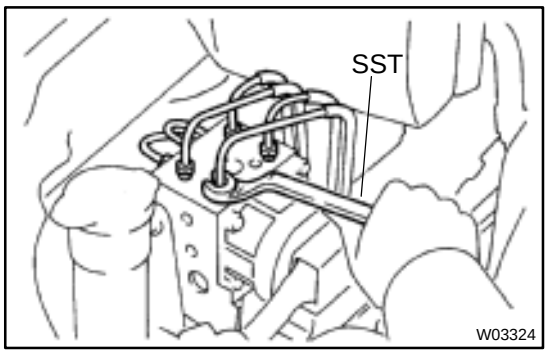

1. REMOVE RIGHT FRONT FENDER LINER

2. REMOVE A/C TUBE CLAMP BRACKET BOLT

3. DISCONNECT BRAKE LINES

Using SST, disconnect the 6 brake lines from the ABS actuator.

SST 09751–36011

Torque: 15 N·m (155 kgf·cm, 11 ft·lbf)

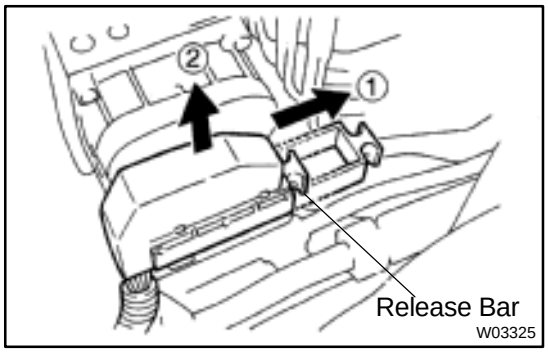

4. DISCONNECT CONNECTOR

Pull out the release bar, and disconnect the connector.

5. REMOVE ABS ACTUATOR ASSEMBLY

Remove the 2 bolts, 2 nuts and ABS actuator assembly.

Torque: 19 N·m (195 kgf·cm, 14 ft·lbf)

6. REMOVE ABS ACTUATOR

(a) Remove the 2 nuts and ABS actuator.

Torque: 9.0 N·m (92 kgf·cm, 80 in.·lbf)

(b) Remove the 2 holders and 3 cushions from the ABS actuator.

BR0BJ–02

DISASSEMBLY

1. DISCONNECT CONNECTOR

Disconnect the connector, and remove the wire harness from the harness guide.

2. REMOVE ECU

(a) Using a T20 torx wrench, loosen the 6 screws.

Torque: 2.6 N·m (27 kgf·cm, 23 in.·lbf)

NOTICE:

- **When removing the ECU from the actuator, it must be removed it upward.**
- **At the time of reassembly, tighten the screws according to the order shown on the left.**

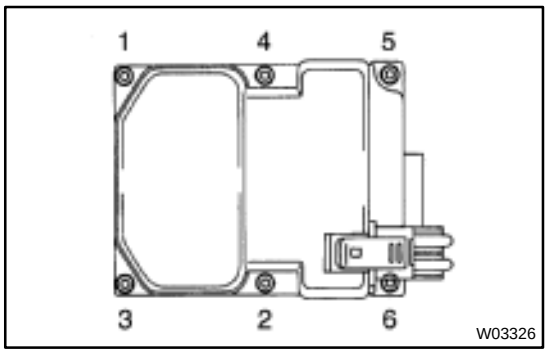

(b) Remove the ECU from the actuator.

NOTICE:

Protect the actuator in order to prevent sealing surface from getting dirty and causing damage on the valve body. If the dirt and the like are stuck to the sealing surface, use plastic tools or soft objects to remove the dirt. Do not use chemical solvents.

BR0BK–01

REASSEMBLY

Reassembly is in the reverse order of disassembly (See page BR–58).

BR0BL–02

INSTALLATION

Installation is in the reverse order of removal (See page BR–57).

HINT:

- After installation, fill the brake reservoir with brake fluid, bleed the brake system (See page BR–4).
- Check for leaks.

ABS & TRAC ACTUATOR

BR07A–06

ON–VEHICLE INSPECTION

HINT:

Using the ABS actuator checker (SST), check the operation of the actuator. If the actuator does not operate, check the operation of sub–wire harness G according to the instructions on pages DI–584 and DI–587. If the solenoid and/or pump motor relay are abnormal, replace the relay and inspect the actuator operation again.

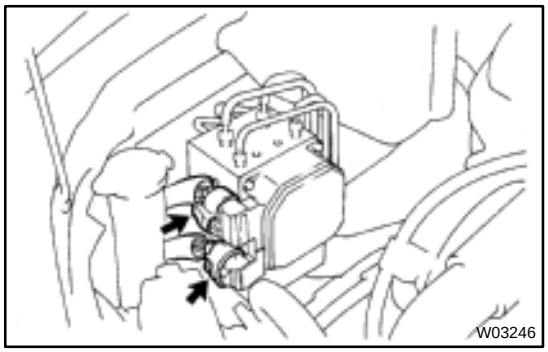

1. INSPECT BATTERY POSITIVE VOLTAGE

Battery positive voltage: 10 – 14 V

2. DISCONNECT CONNECTORS

Disconnect the 2 connectors from the actuator.

3. CONNECT ABS ACTUATOR CHECKER (SST)

(a) Connect the actuator checker (SST) to the actuator side wire harness via the sub–wire harness (SST), as shown.

SST 09990–00150, 09990–00250, 09990–00360, 09990–00450

(b) Connect the red cable of the checker to the battery positive (+) terminal and black cable to the negative (–) terminal. Connect the black cable of the sub–wire harness to the battery negative (–) terminal or body ground.

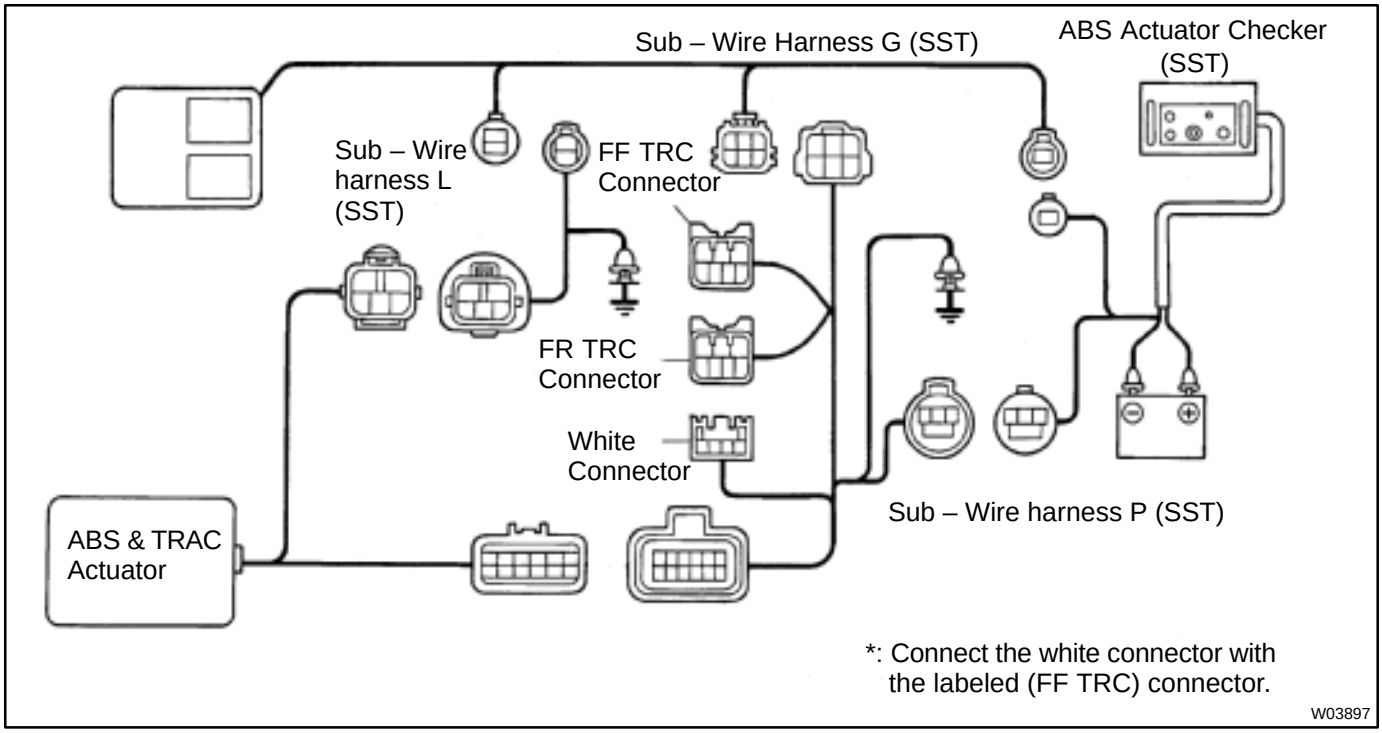

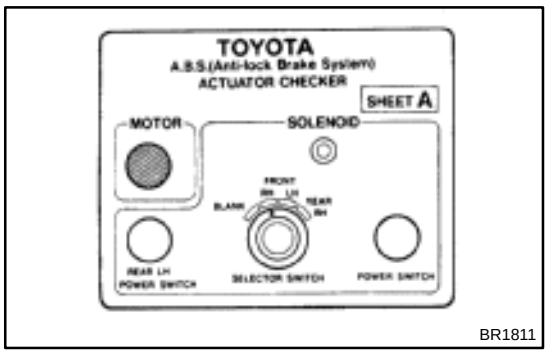

(c) Place the "SHEET A" (SST) on the actuator checker.
SST 09990–00163

4. INSPECT BRAKE ACTUATOR OPERATION

(a) Start the engine, and run it at idle.

(b) Turn the selector switch of the actuator checker to "FRONT RH" position.

(c) Push and hold in the MOTOR switch for a few seconds.

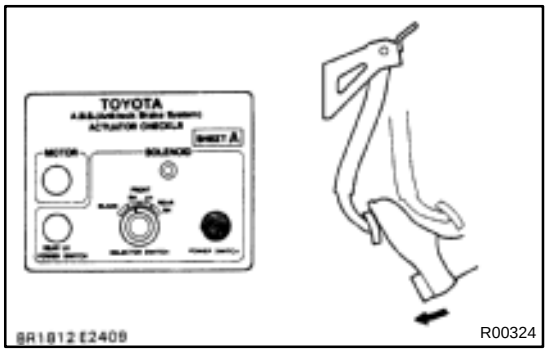

(d) Depress the brake pedal and hold it until step (g) is completed.

(e) Push the POWER SWITCH, and check that the brake pedal does not go down.

NOTICE:

Do not keep the POWER SWITCH pushed down for more than 10 seconds.

(f) Release the switch, and check that the pedal goes down.

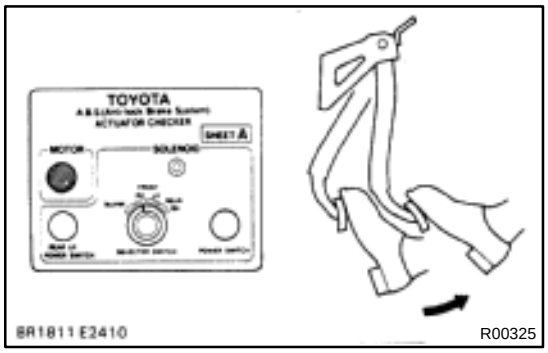

(g) Push and hold in the MOTOR switch for a few seconds, and check that the pedal returns.

(h) Release the brake pedal.

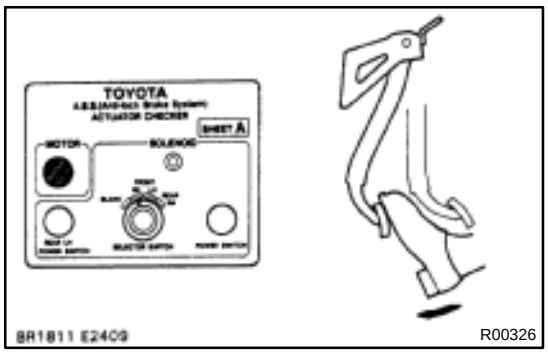

(i) Push and hold in the MOTOR switch for a few seconds.

(j) Depress the brake pedal and hold it for about 15 seconds. As you hold the pedal down, push the MOTOR switch for a few seconds. Check that the brake pedal does not pulsate.

(k) Release the brake pedal.

(l) Turn the selector switch to "FRONT LH" position.

(m) Repeat (c) to (j), checking the actuator operation similarly.

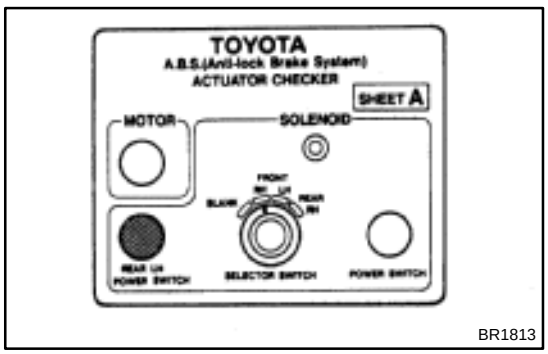

(n) Similarly, inspect "REAR RH" and "REAR LH" position.

HINT:

When inspecting "REAR LH" position, push the REAR LH switch instead of the POWER SWITCH, and you can inspect in any selector switch position.

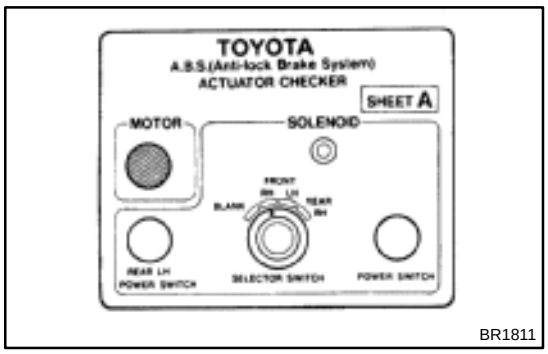

(o) Push and hold in the MOTOR switch for a few seconds.
(p) Stop the engine.

5. DISCONNECT ACTUATOR CHECKER (SST) FROM ACTUATOR

Remove the "SHEET A" (SST) and disconnect the actuator checker (SST) and sub–wire harness (SST) from the actuator.

SST 09990–00150, 09990–00163, 09990–00250, 09990–00360, 09990–00450

6. CONNECT CONNECTORS

Connect the 2 connectors to the actuator.

7. CLEAR DTC (See page DI–574)

BR077–04

COMPONENTS

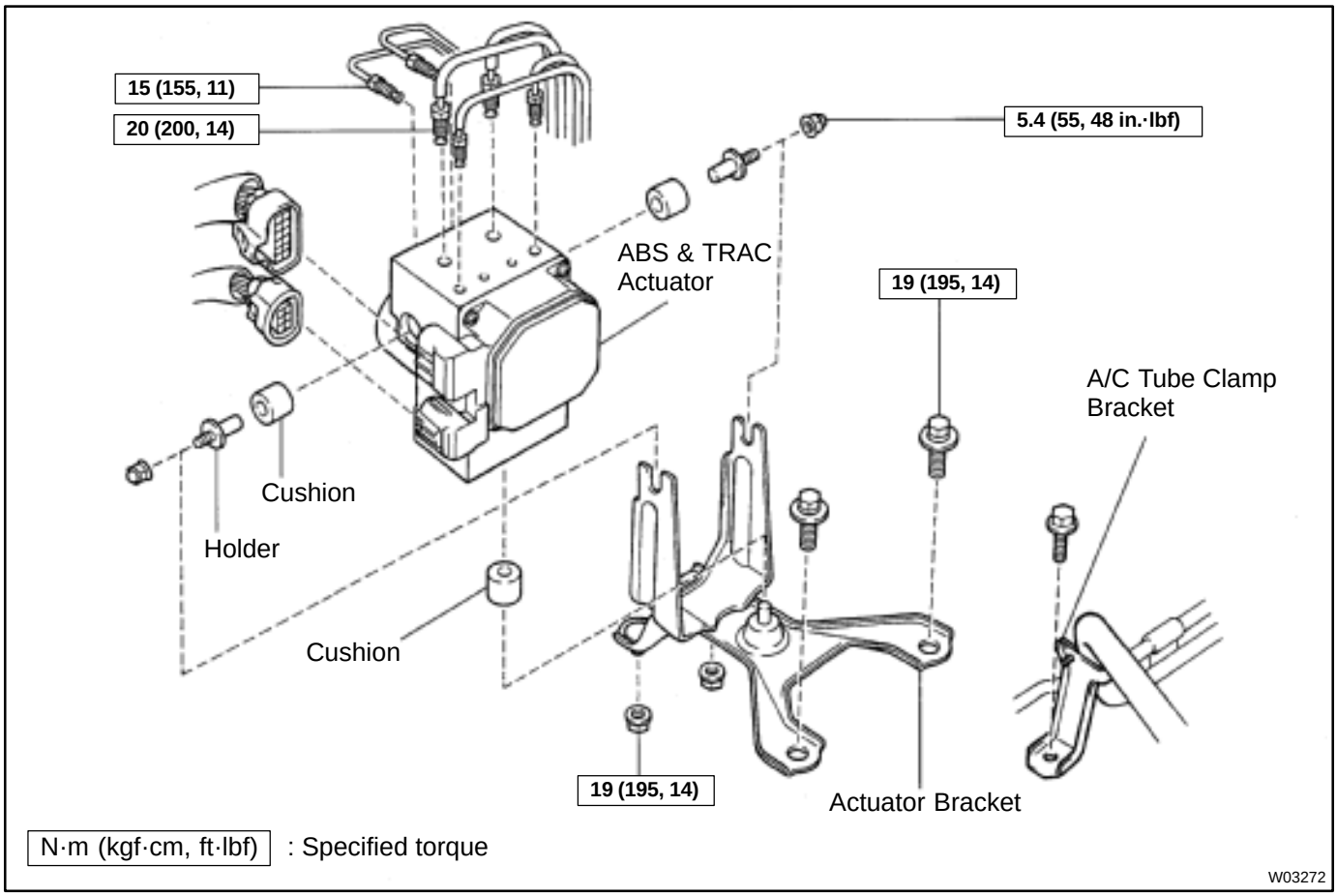

BR078–03

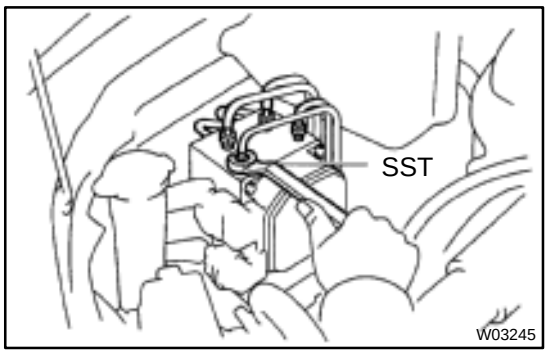

REMOVAL

1. REMOVE RIGHT FRONT FENDER LINER

2. REMOVE A/C TUBE CLAMP BRACKET BOLT

3. DISCONNECT BRAKE LINES

Using SST, disconnect the 6 brake lines from the ABS & TRAC actuator.

SST 09751–36011

Torque:
10 mm nut 15 N·m (155 kgf·cm, 11 ft·lbf)
12 mm nut 20 N·m (200 kgf·cm, 14 ft·lbf)

4. REMOVE ABS & TRAC ACTUATOR ASSEMBLY

(a) Disconnect the 2 connectors.

(b) Remove the 2 blots, 2 nuts and ABS & TRAC actuator assembly.

Torque: 19 N·m (195 kgf·cm, 14 ft·lbf)

5. REMOVE ABS & TRAC ACTUATOR

(a) Remove the 2 nuts and ABS & TRAC actuator from actuator bracket.

Torque: 5.4 N·m (55 kgf·cm, 48 in.·lbf)

(b) Remove the 2 holders and 3 cushions from the ABS & TRAC actuator.

BR079–03

INSTALLATION

Installation is in the reverse order of removal (See page BR–65).

HINT:

- After installation, fill the brake reservoir with brake fluid and bleed the brake system. (See page BR–4)
- Check for leaks.

FRONT SPEED SENSOR

COMPONENTS

BR0BQ–03

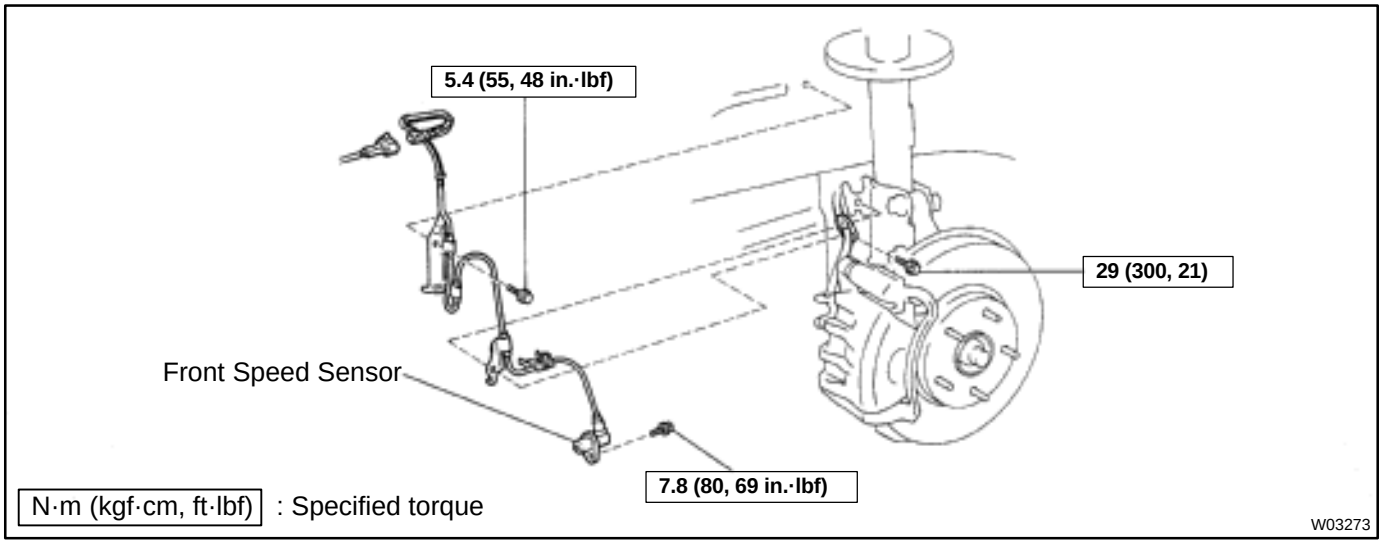

BR0BR–03

REMOVAL

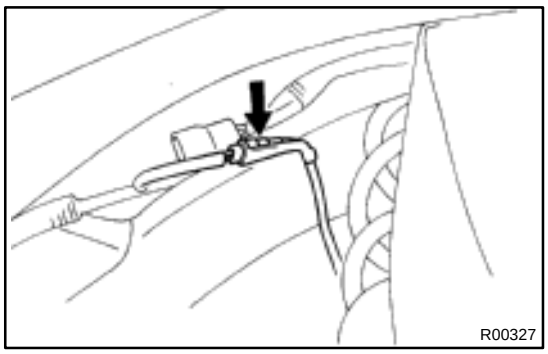

1. DISCONNECT SPEED SENSOR CONNECTOR

(a) Remove the fender liner.

(b) Disconnect the speed sensor connector.

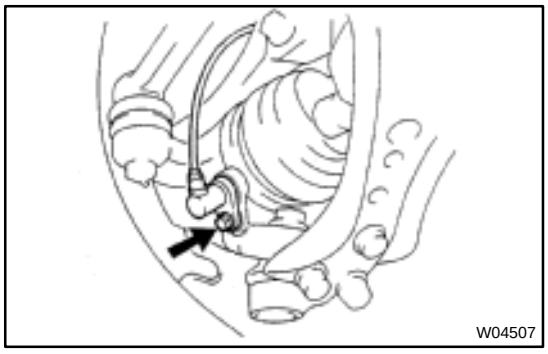

2. REMOVE SPEED SENSOR

(a) Remove the bolt, flexible hose and speed sensor harness clamp from the shock absorber.
Torque: 29 N·m (300 kgf·cm, 21 ft·lbf)

(b) Remove the resin clip and clamp bolt holding the sensor harness to the body.
Torque: 5.4 N·m (55 kgf·cm, 48 in.·lbf)

(c) Remove the speed sensor from the steering knuckle.
Torque: 7.8 N·m (80 kgf·cm, 69 in.·lbf)

BR0BS–02

INSTALLATION

Installation is in the reverse order of removal (See page BR–68).

HINT:

After installation, check the speed sensor signal (See page DI–493, DI–539).

REAR SPEED SENSOR

COMPONENTS

BR0BT–03

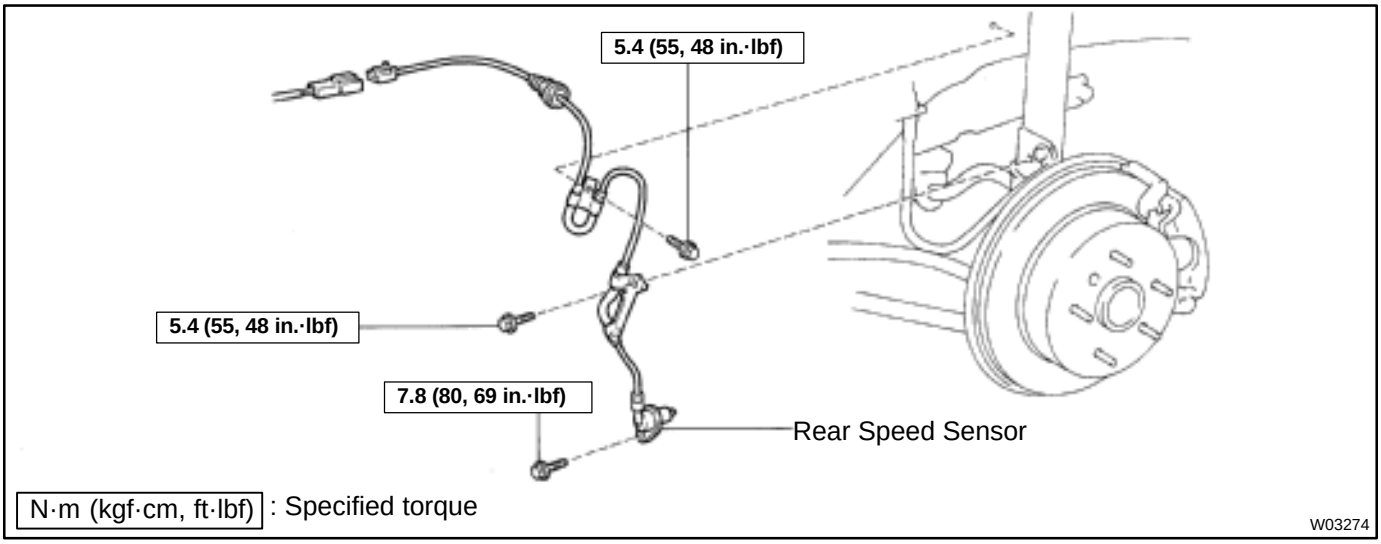

BR0BU–03

REMOVAL

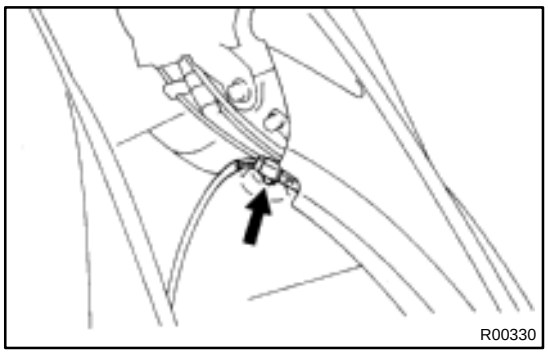

1. DISCONNECT SPEED SENSOR CONNECTOR

(a) Remove the seat cushion and side seatback (See page BO–114 or BO–119).

(b) Disconnect the speed sensor connector, and pull out the sensor wire harness with the grommet.

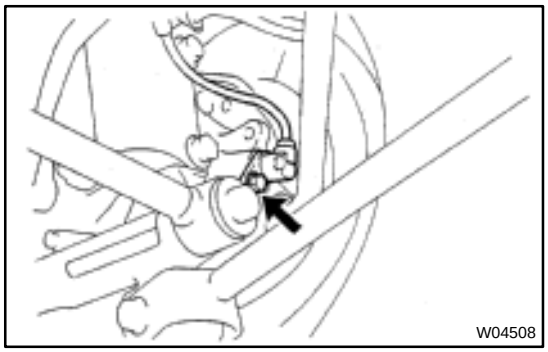

2. REMOVE SPEED SENSOR

(a) Remove the 2 clamp bolts holding the sensor wire harness to the body and shock absorber.
Torque: 5.4 N·m (55 kgf·cm, 48 in.·lbf)

(b) Remove the speed sensor from the axle carrier.
Torque: 7.8 N·m (80 kgf·cm, 69 in.·lbf)

BR0BV–02

INSTALLATION

Installation is in the reverse order of removal (See page BR–71).

HINT:

After installation, check the speed sensor signal (See page DI–493, DI–539).

CHARGING SYSTEM

CH02U–01

ON–VEHICLE INSPECTION

CAUTION:

- **Check that the battery cables are connected to the correct terminals.**
- **Disconnect the battery cables when the battery is given a quick charge.**
- **Do not perform tests with a high voltage insulation resistance tester.**
- **Never disconnect the battery while the engine is running.**

1. CHECK BATTERY ELECTROLYTE LEVEL

Check the electrolyte quantity of each cell.

Maintenance–Free Battery:

If under the lower level, replace the battery (or add distilled water if possible). Check the charging system.

Except Maintenance–Free Battery:

If under the lower level, add distilled water.

Except Maintenance–Free Battery

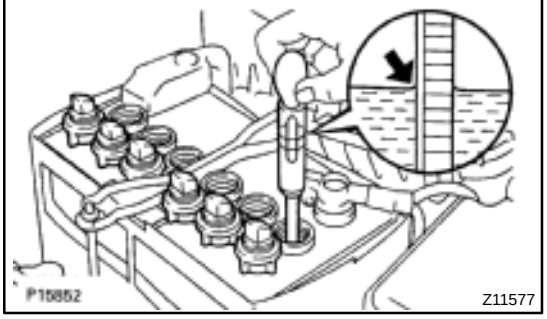

2. Except Maintenance–Free Battery: CHECK BATTERY SPECIFIC GRAVITY

Check the specific gravity of each cell.

Standard specific gravity:
1.25 – 1.29 at 20˚C (68˚F)

If the specific gravity is less than specification, charge the battery.

Maintenance–Free Battery Voltmeter

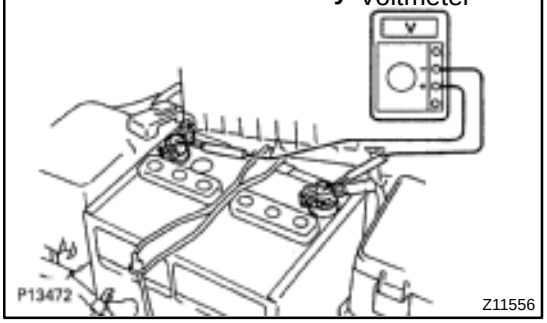

3. Maintenance–Free Battery: CHECK BATTERY VOLTAGE

(a) After having driven the vehicle and in the case that 20 minutes have not passed after having stopped the engine, turn the ignition switch ON and turn on the electrical system (headlight, blower motor, rear defogger etc.) for 60 seconds to remove the surface charge.

(b) Turn the ignition switch OFF and turn off the electrical systems.

(c) Measure the battery voltage between the negative (–) and positive (+) terminals of the battery.

Standard voltage: 12.5 – 12.9 V at 20˚C (68˚F)

If the voltage is less than specification, charge the battery.

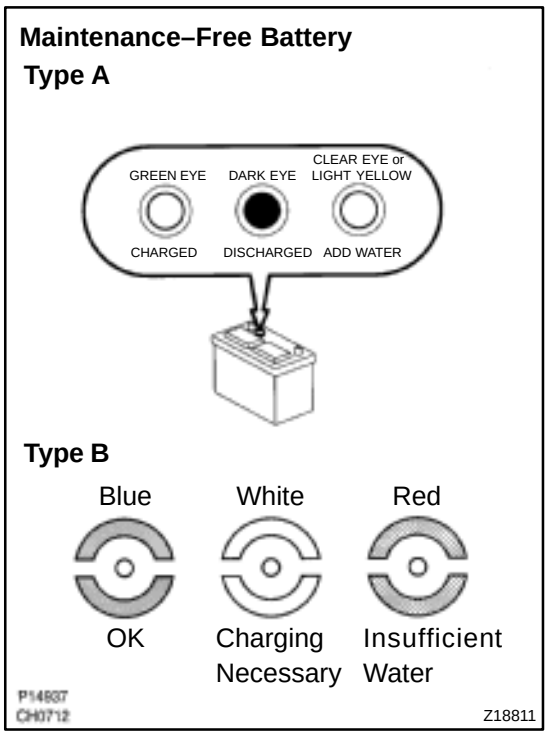

HINT:

Check the indicator as shown in the illustration.

4. CHECK BATTERY TERMINALS, FUSIBLE LINK AND FUSES

(a) Check that the battery terminals are not loose or corroded.

If the terminals are corroded, clean the terminals.

(b) Check the fusible link, H–fuses, M–fuse and fuses for continuity.

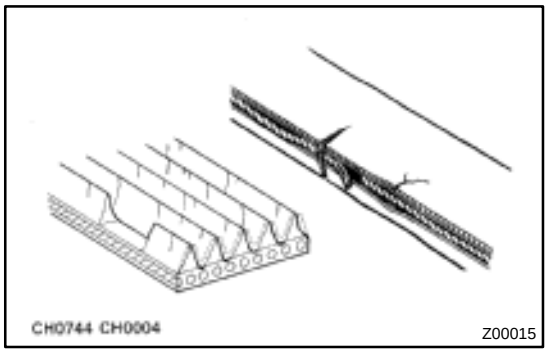

5. INSPECT DRIVE BELTS

(a) Visually check the drive belt for excessive wear, frayed cords etc.

If any defect has been found, replace the drive belt.

HINT:

Cracks on the rib side of a drive belt are considered acceptable. If the drive belt has chunks missing from the ribs, it should be replaced.

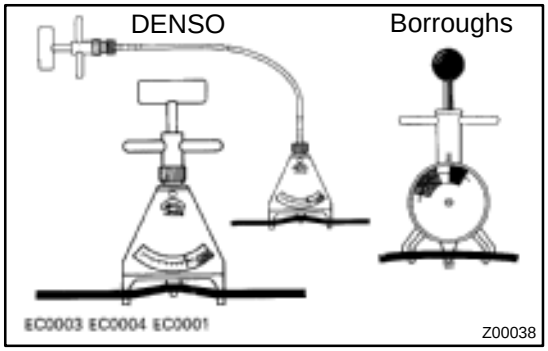

(b) Using a belt tension gauge, measure the belt tension.

Belt tension gauge:

DENSO BTG–20 (95506–00020)

Borroughs No. BT–33–73F

Drive belt tension:

w/ A/C	New belt	165 ± 25 lbf
	Used belt	110 ± 10 lbf
w/o A/C	New belt	125 ± 25 lbf
	Used belt	95 ± 20 lbf

If the belt tension is not as specified, adjust it.

HINT:

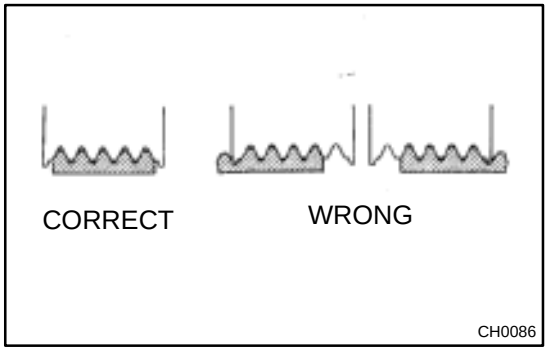

- "New belt" refers to a belt which has been used less than 5 minutes on a running engine.
- "Used belt" refers to a belt which has been used on a running engine for 5 minutes or more.
- After installing a belt, check that it fits properly in the ribbed grooves.
- Check with your hand to confirm that the belt has not slipped out of the groove on the bottom of the pulley.

◆ After installing a new belt, run the engine for about 5 minutes and recheck the belt tension.

6. VISUALLY CHECK GENERATOR WIRING AND LISTEN FOR ABNORMAL NOISES

(a) Check that the wiring is in good condition.

(b) Check that there is no abnormal noise from the generator while the engine is running.

7. CHECK CHARGE WARNING LIGHT CIRCUIT

(a) Warm up the engine and then turn it off.

(b) Turn off all accessories.

(c) Turn the ignition switch ”ON”. Check that the charge warning light is lit.

(d) Start the engine. Check that the light goes off.

If the light does not go off as specified, troubleshoot the charge light circuit.

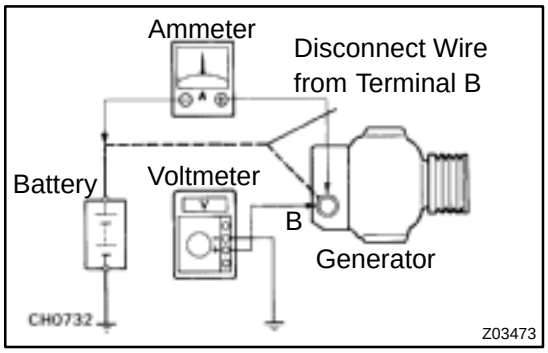

8. INSPECT CHARGING CIRCUIT WITHOUT LOAD

HINT:

If a battery/generator tester is available, connect the tester to the charging circuit as per manufacturer’s instructions.

(a) If a tester is not available, connect a voltmeter and ammeter to the charging circuit as follows:

(1) Disconnect the wire from terminal B of the generator, and connect it to the negative (–) tester probe of the ammeter.

(2) Connect the positive (+) tester probe of the ammeter to terminal B of the generator.

(3) Connect the positive (+) tester probe of the voltmeter to terminal B of the generator.

(4) Ground the negative (–) tester probe of the voltmeter.

(b) Check the charging circuit as follows:

With the engine running from idling to 2,000 rpm, check the reading on the ammeter and voltmeter.

Standard amperage: 10 A or less

Standard voltage: 13.5 – 15.1 V

If the voltmeter reading is more than standard voltage, replace the voltage regulator.

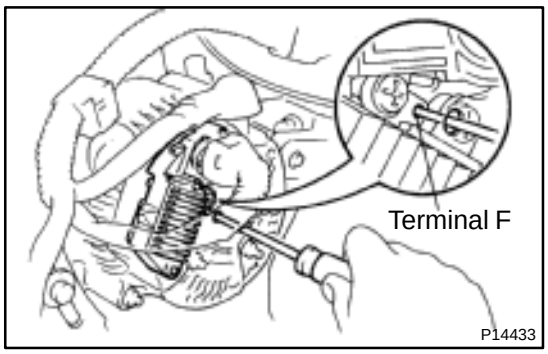

If the voltmeter reading is less than standard voltage, check the voltage regulator and generator as follows:

- With terminal F grounded, start the engine and check the voltmeter reading of terminal B.
- If the voltmeter reading is more than standard voltage, replace the voltage regulator.
- If the voltmeter reading is less than standard voltage, check the generator.

9. INSPECT CHARGING CIRCUIT WITH LOAD

(a) With the engine running at 2,000 rpm, turn on the high beam headlights and place the heater blower switch at "HI".

(b) Check the reading on the ammeter.

Standard amperage: 30 A or more

If the ammeter reading is less than the standard amperage, repair the generator.

HINT:

If the battery is fully charged, the indication will sometimes be less than standard amperage.

GENERATOR

CH02V–03

COMPONENTS

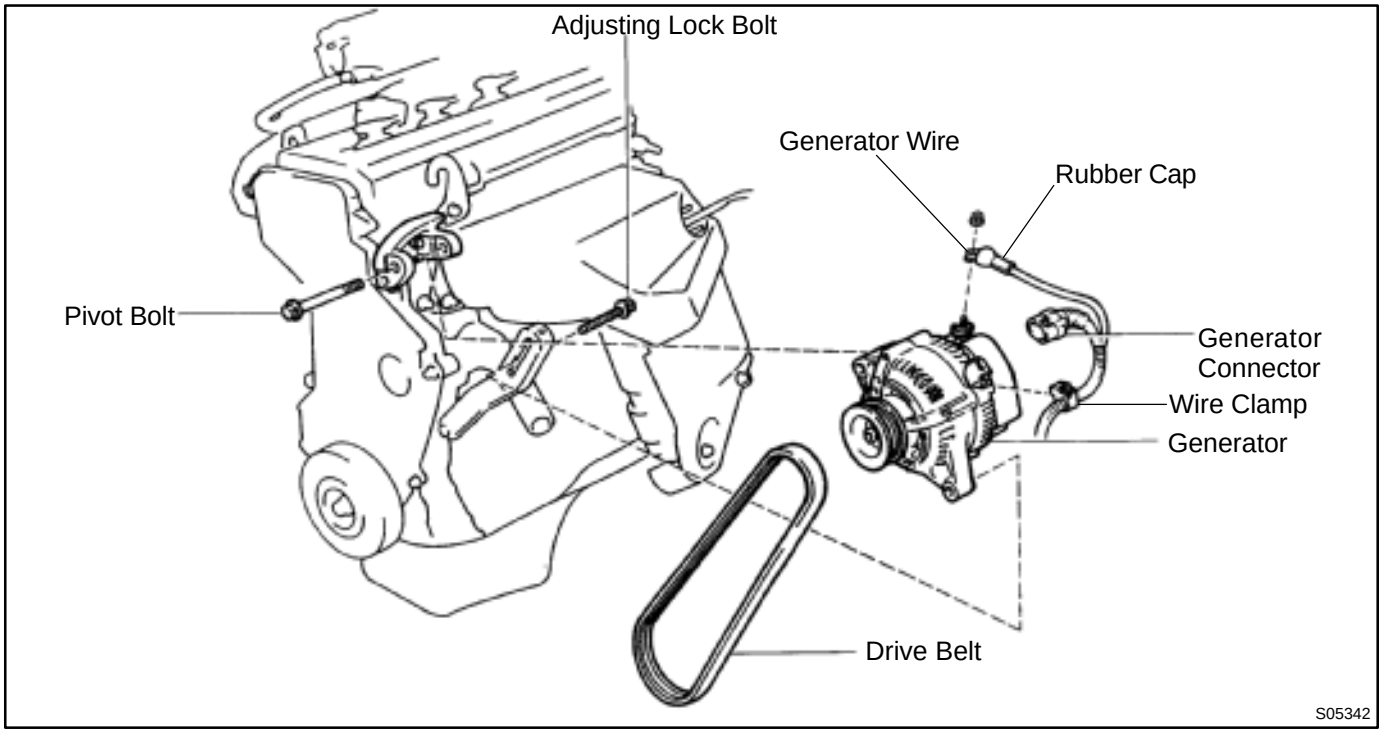

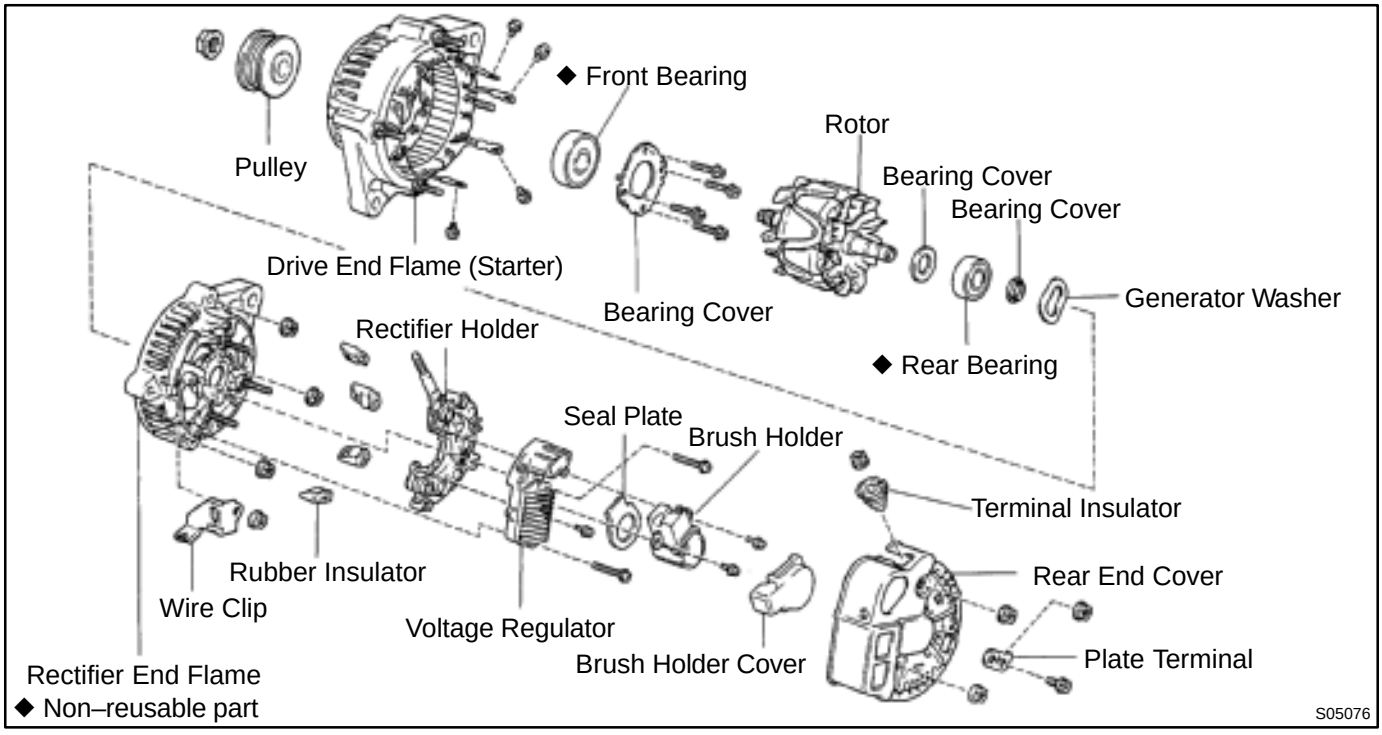

CH02W–03

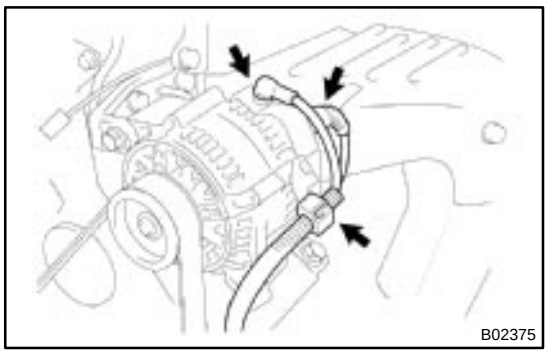

REMOVAL

1. DISCONNECT CONNECTOR AND WIRE FROM GENERATOR

(a) Disconnect the wire clamp from the wire clip on the rectifier end frame.
(b) Disconnect the generator connector.
(c) Remove the rubber cap and nut, and disconnect the generator wire.

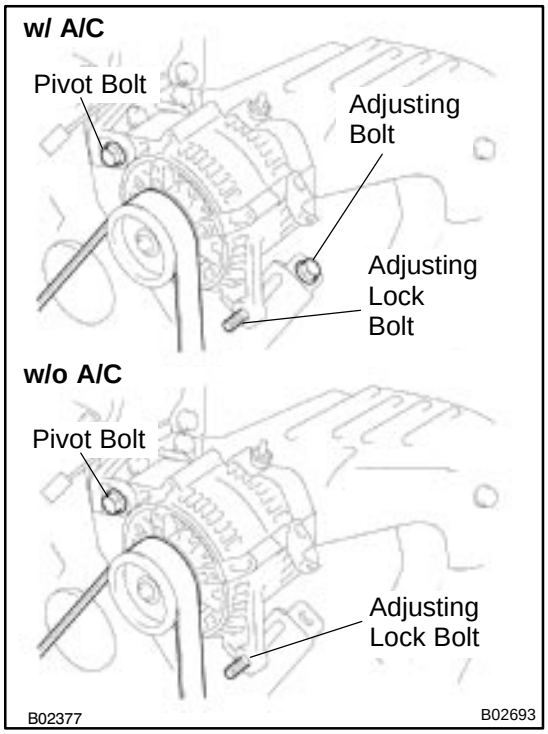

2. REMOVE GENERATOR

(a) Loosen the adjusting lock bolt (w/ A/C), adjusting bolt and pivot bolt.
Torque:
Pivot bolt: 52 N·m (530 kgf·cm, 38 ft·lbf)
Adjusting lock bolt (w/ A/C) or adjusting bolt (w/o A/C) 18 N·m (185 kgf·cm, 13 ft·lbf)
(b) Remove the drive belt.
(c) Remove the adjusting lock bolt (w/ A/C) or adjusting bolt (w/o A/C) and pivot bolt.
(d) Remove the generator.

CH02X–01

DISASSEMBLY

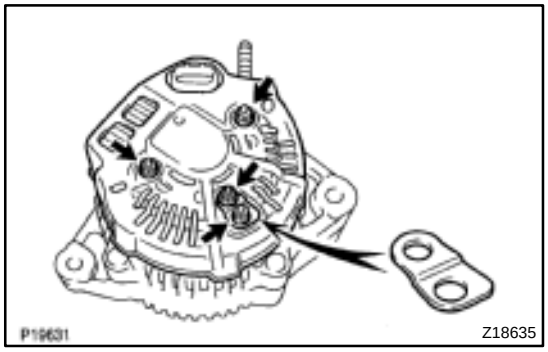

1. REMOVE REAR END COVER

(a) Remove the nut and terminal insulator.

(b) Remove the bolt, 3 nuts, plate terminal and end cover.

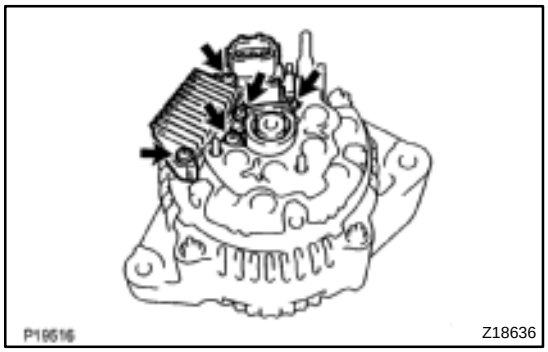

2. REMOVE BRUSH HOLDER AND VOLTAGE REGULATOR

(a) Remove the brush holder cover from the brush holder.

(b) Remove the 5 screws, brush holder and voltage regulator.

(c) Remove the seal plate from the rectifier end frame.

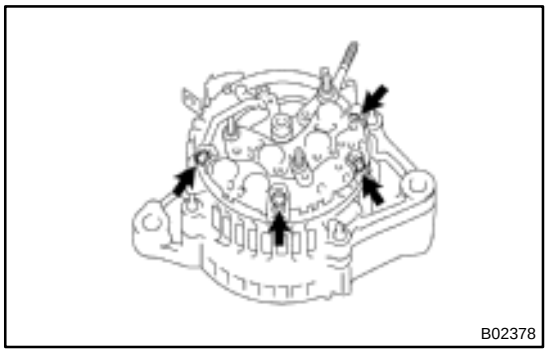

3. REMOVE RECTIFIER HOLDER

(a) Remove the 4 screws and rectifier holder.

(b) Remove the 4 rubber insulators.

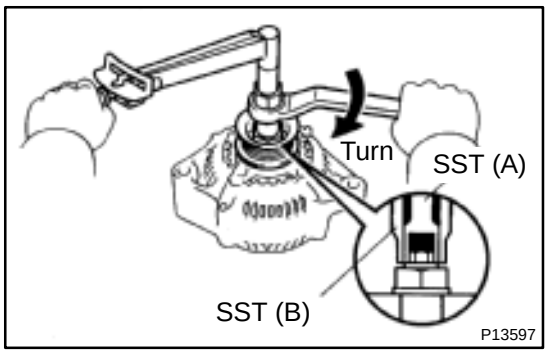

4. REMOVE PULLEY

(a) Hold SST (A) with a torque wrench, and tighten SST (B) clockwise to the specified torque.
SST 09820–63010
Torque: 39 N·m (400 kgf·cm, 29 ft·lbf)

(b) Check that SST (A) is secured to the rotor shaft.

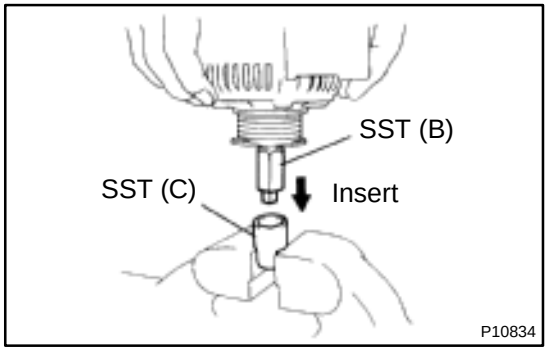

(c) Mount SST (C) in a vise.

(d) Insert SST (B) into SST (C), and attach the pulley nut to SST (C).

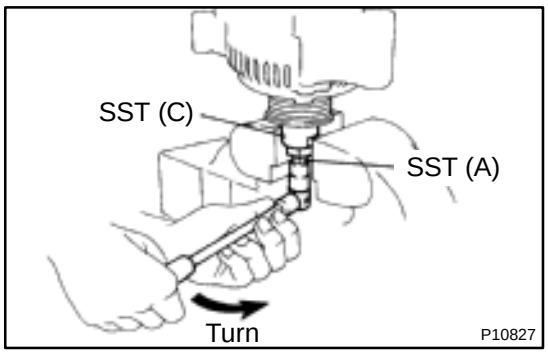

(e) To loosen the pulley nut, turn SST (A) in the direction shown in the illustration.

NOTICE:

To prevent damage to the rotor shaft, do not loosen the pulley nut more than one–half of a turn.

(f) Remove the generator from SST (C).

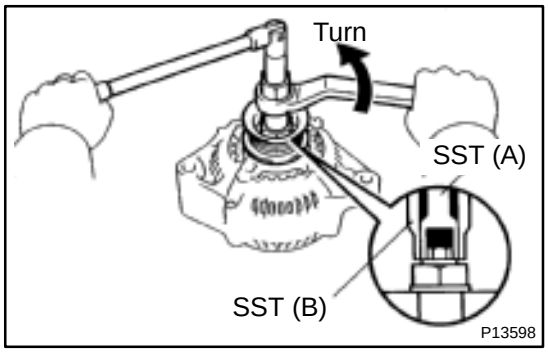

(g) Turn SST (B), and remove SST (A and B).

(h) Remove the pulley nut and pulley.

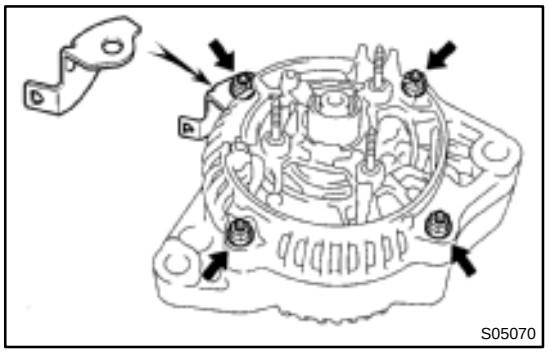

5. REMOVE RECTIFIER END FRAME

(a) Remove the 4 nuts and wire clip.

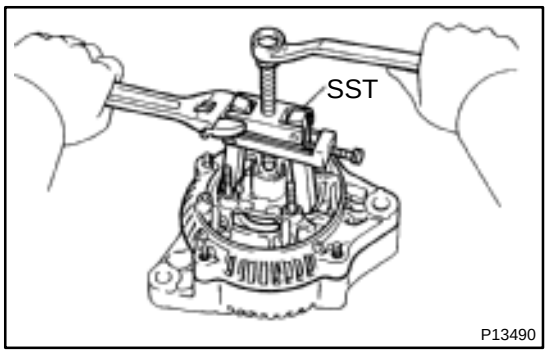

(b) Using SST, remove the rectifier end frame.
SST 09286–46011

(c) Remove the generator washer from the rotor.

6. REMOVE ROTOR FROM DRIVE END FRAME

CH02Y–01

INSPECTION

1. INSPECT ROTOR

(a) Check the rotor for open circuit.
Using an ohmmeter, check that there is continuity between the slip rings.
Standard resistance: 2.7 – 3.1 Ω at 20˚C (68˚F)

If there is no continuity, replace the rotor.

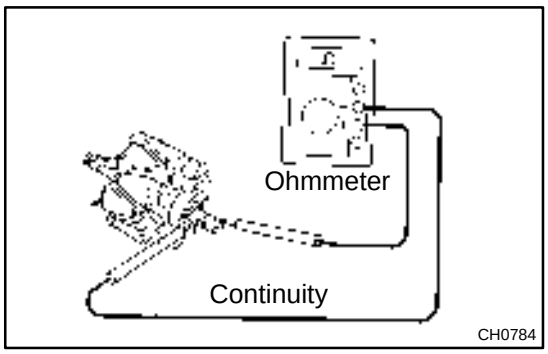

(b) Check the rotor for ground.
Using an ohmmeter, check that there is no continuity between the slip ring and rotor.

If there is continuity, replace the rotor.

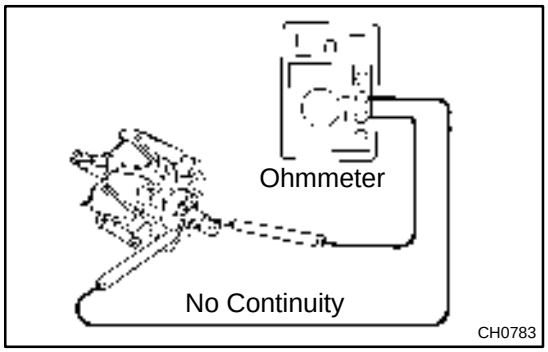

(c) Check that the slip rings are not rough or scored.

If rough or scored, replace the rotor.

(d) Using vernier calipers, measure the slip ring diameter.
Standard diameter: 14.2 – 14.4 mm (0.559 – 0.567 in.)
Minimum diameter: 12.8 mm (0.504 in.)

If the diameter is less than minimum, replace the rotor.

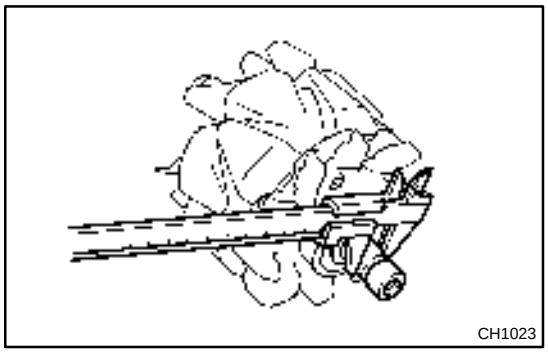

2. INSPECT STATOR (DRIVE END FRAME)

(a) Check the stator for open circuit.
Using an ohmmeter, check that there is continuity between the coil leads.

If there is no continuity, replace the drive end frame assembly.

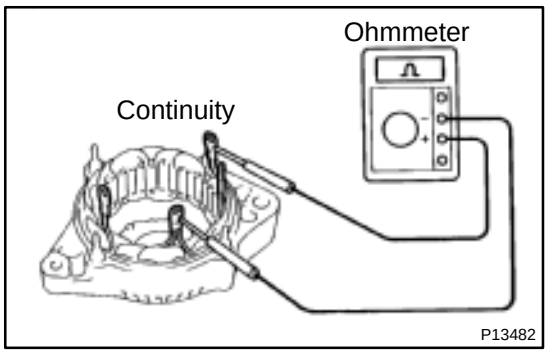

(b) Check the stator for ground.
Using an ohmmeter, check that there is no continuity between the coil lead and drive end frame.

If there is continuity, replace the drive end frame assembly.

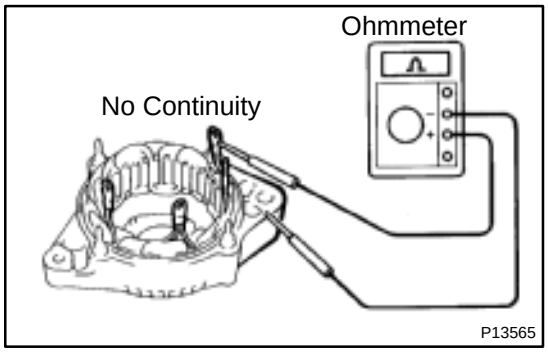

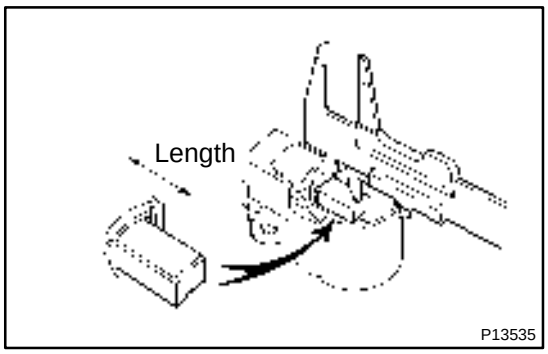

3. INSPECT BRUSHES

Using vernier calipers, measure the exposed brush length.

Standard exposed length: 10.5 mm (0.413 in.)

Minimum exposed length: 1.5 mm (0.059 in.)

If the exposed length is less than minimum, replace the brush holder assembly.

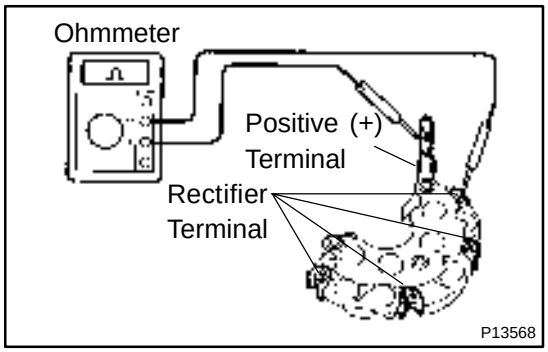

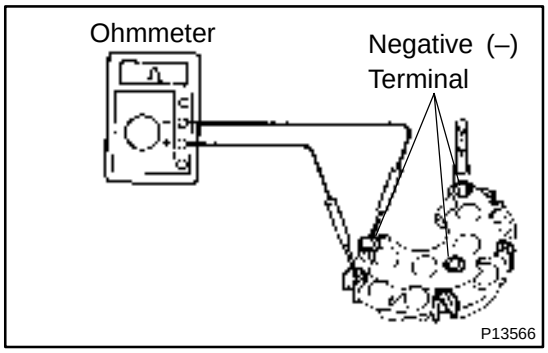

4. INSPECT RECTIFIERS (RECTIFIRE HOLDER)

(a) Check the positive (+) rectifire.

(1) Using an ohmmeter, connect one tester probe to the positive (+) terminal and the other to each rectifier terminal.

(2) Reverse the polarity of the tester probes and repeat step (a).

(3) Check that one shows continuity and the other shows no continuity.

If continuity is not as specified, replace the rectifier holder.

(b) Check the negative (–) rectifire.

(1) Using an ohmmeter, connect one tester probe to each negative (–) terminal and the other to each rectifier terminal.

(2) Reverse the polarity of the tester probes and repeat step (a).

(3) Check that one shows continuity and the other shows no continuity.

If continuity is not as specified, replace the rectifier holder.

5. INSPECT BEARING

Check the bearing is not rough or worn.

If necessary, replace the bearing. (See page CH–11)

CH02Z–01

REPLACEMENT

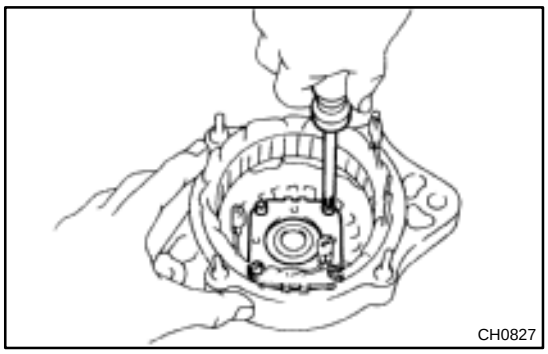

1. REPLACE FRONT BEARING

(a) Remove the 4 screws, bearing retainer and bearing.

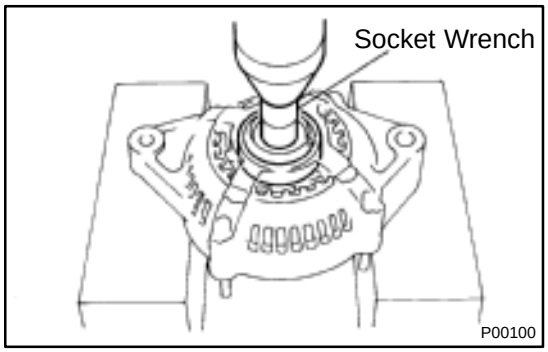

(b) Using a socket wrench and press, press out the bearing.

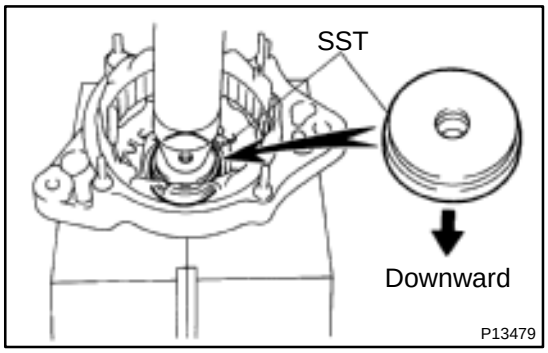

(c) Using SST and a press, press in a new bearing.
SST 09950–60010 (09951–00500)

(d) Install the bearing retainer with the 4 screws.
Torque: 3.0 N·m (31 kgf·cm, 27 in.·lbf)

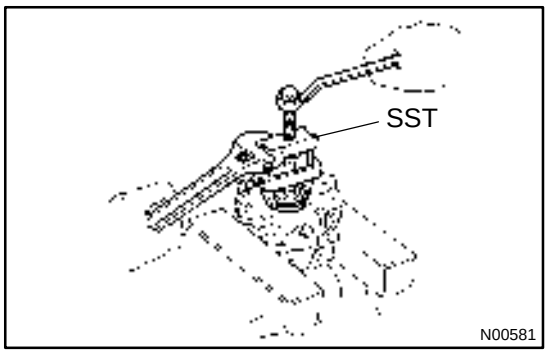

2. REPLACE REAR BEARING

(a) Using SST, remove the bearing cover (outside) and bearing.
SST 09820–00021

NOTICE:
Be careful not to damage the fan.

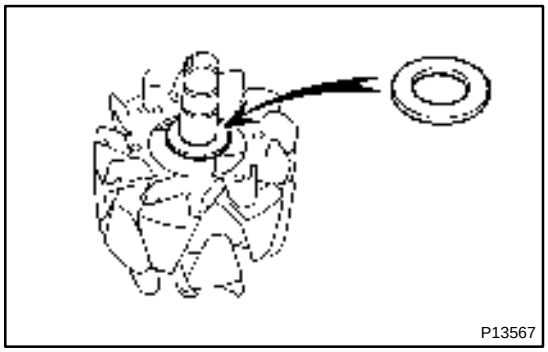

(b) Remove the bearing cover (inside).

(c) Place the bearing cover (inside) on the rotor.

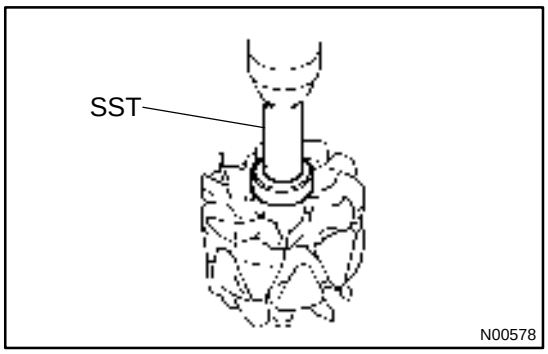

(d) Using SST and a press, press in a new bearing.
SST 09820–00030

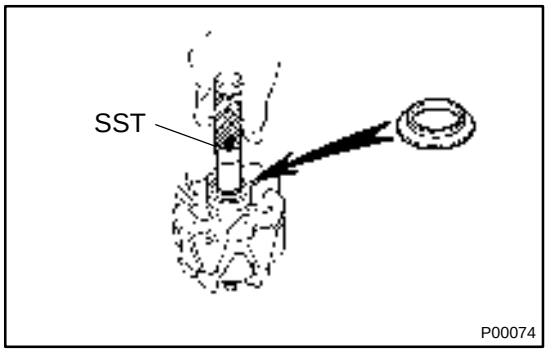

(e) Using SST, push in the bearing cover (outside).
SST 09285–76010

CH030–01

REASSEMBLY

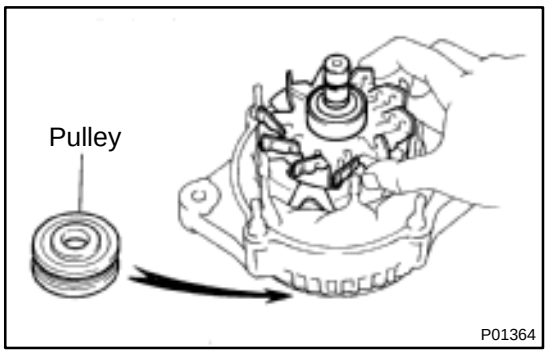

1. INSTALL ROTOR TO DRIVE END FRAME

(a) Place the rectifier end frame on the pulley.

(b) Install the rotor to the rectifier end frame.

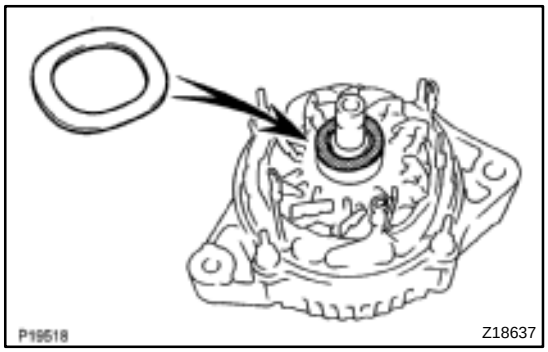

2. INSTALL RECTIFIER END FRAME

(a) Place the generator washer on the rotor.

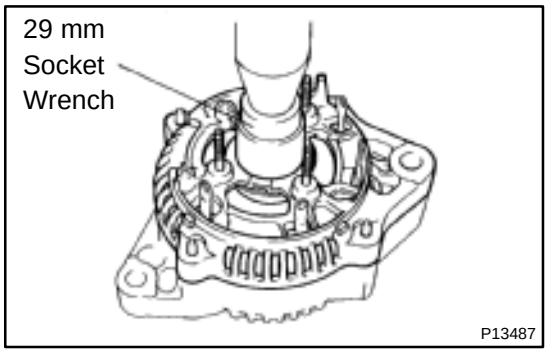

(b) Using a 29 mm socket wrench and press, slowly press in the rectifier end frame.

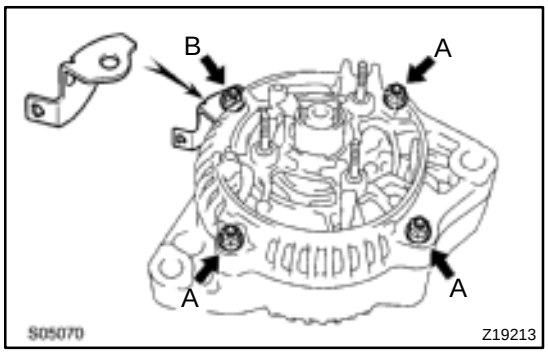

(c) Install the wire clip and 4 nuts.

Torque:
Nut A: 4.5 N·m (46 kgf·cm, 40 in.·lbf)
Nut B: 5.4 N·m (55 kgf·cm, 48 in.·lbf)

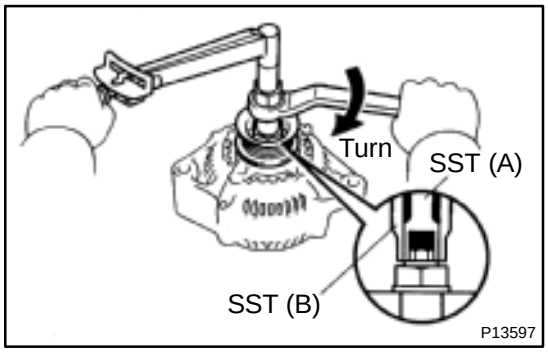

3. INSTALL PULLEY

(a) Install the pulley to the rotor shaft by tightening the pulley nut by hand.

(b) Hold SST (A) with a torque wrench, and tighten SST (B) clockwise to the specified torque.
SST 09820–63010
Torque: 39 N·m (400 kgf·cm, 29 ft·lbf)

(c) Check that SST (A) is secured to the pulley shaft.

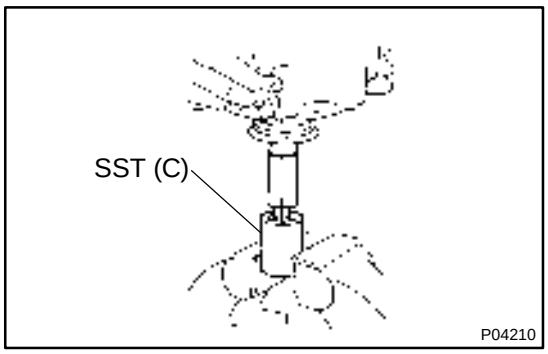

(d) Mount SST (C) in a vise.
(e) Insert SST (B) into SST (C), and attach the pulley nut to SST (C).

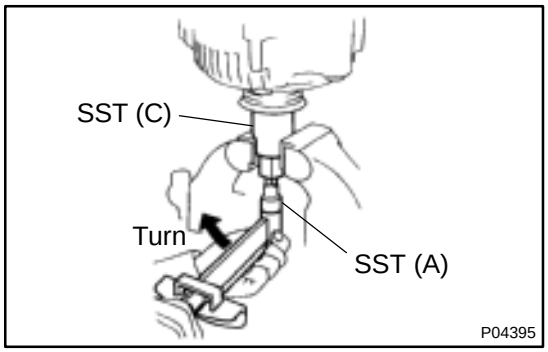

(f) To torque the pulley nut, turn SST (A) in the direction shown in the illustration.
Torque: 110.5 N·m (1,125 kgf·cm, 81 ft·lbf)
(g) Remove the generator from SST (C).

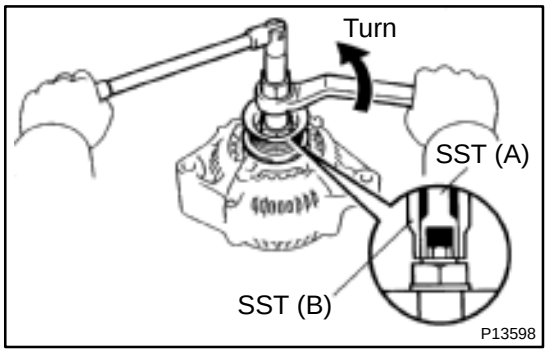

(h) Turn SST (B), and remove SST (A and B).

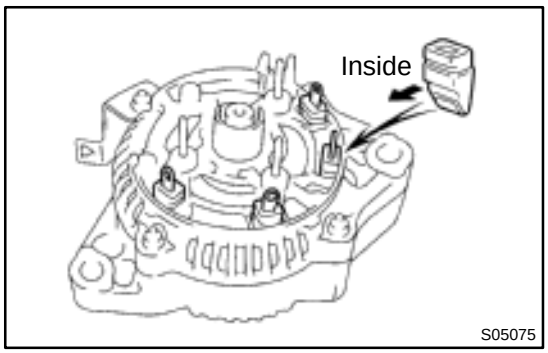

4. INSTALL RECTIFIER HOLDER
(a) Install the 4 rubber insulators on the lead wires.
NOTICE:
Be careful of the rubber insulators installation direction.

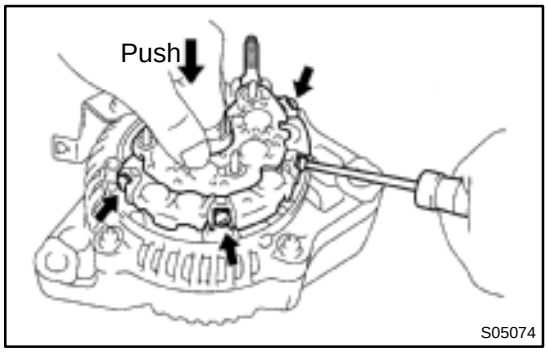

(b) Install the rectifier holder while pushing it with the 4 screws.
Torque: 2.9 N·m (30 kgf·cm, 26 in.·lbf)

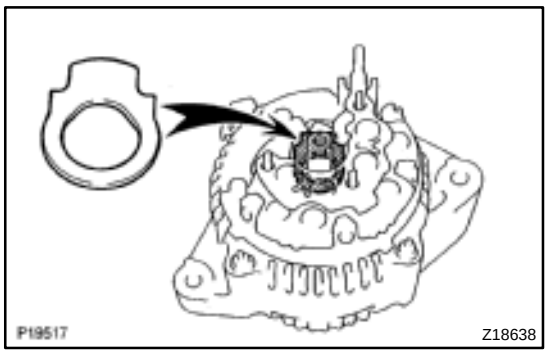

5. INSTALL VOLTAGE REGULATOR AND BRUSH HOLDER

(a) Place the seal plate on the rectifier end frame.

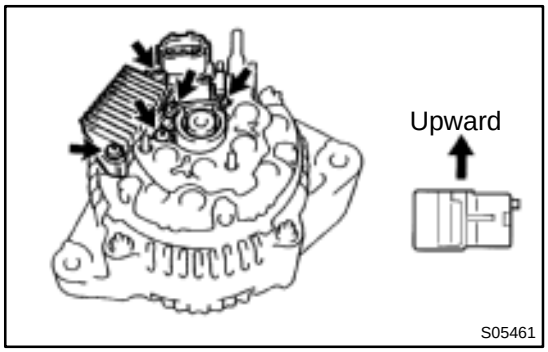

(b) Place the voltage regulator and brush holder on the rectifier end frame.

NOTICE:

Be careful of the holder installation direction.

(c) Install the 5 screws.

Torque: 2.0 N·m (20 kgf·cm, 18 in.·lbf)

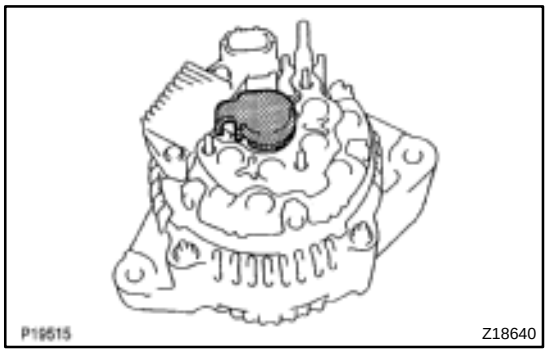

(d) Place the brush holder cover on the brush holder.

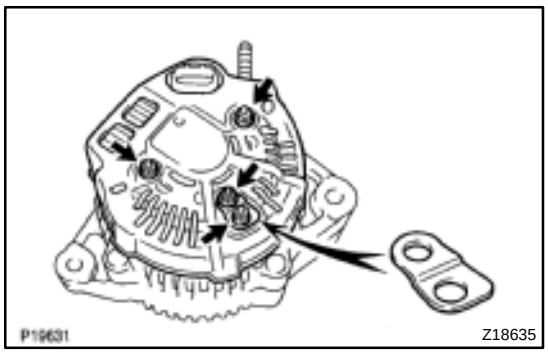

6. INSTALL REAR END COVER

(a) Install the end cover and plate terminal with the bolt and 3 nuts.

Torque:

Nut: 4.4 N·m (45 kgf·cm, 39 in.·lbf)

Bolt: 3.9 N·m (39 kgf·cm, 35 in.·lbf)

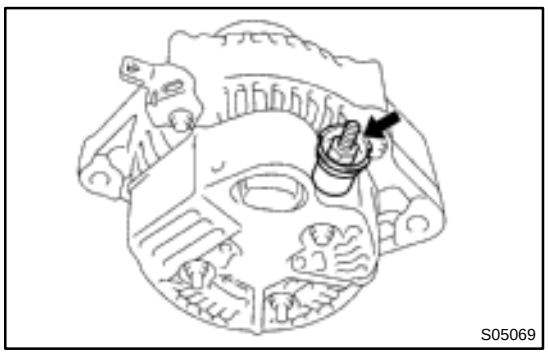

(b) Install the terminal insulator with the nut.

Torque: 4.1 N·m (42 kgf·cm, 36 in.·lbf)

7. CHECK THAT ROTOR ROTATES SMOOTHLY

CH031–01

INSTALLATION

Installation is in the reverse order of removal. (See page CH–6)

CHARGING SYSTEM

CH01D–01

ON–VEHICLE INSPECTION

CAUTION:

- **Check that the battery cables are connected to the correct terminals.**
- **Disconnect the battery cables when the battery is given a quick charge.**
- **Do not perform tests with a high voltage insulation resistance tester.**
- **Never disconnect the battery while the engine is running.**

1. CHECK BATTERY ELECTROLYTE LEVEL

Check the electrolyte quantity of each cell.

(1) Maintenance–Free Battery:
If under the lower level, replace the battery (or add distilled water if possible). Check the charging system.

(2) Except Maintenance–Free Battery:
If under the lower level, add distilled water.

Except Maintenance–Free Battery

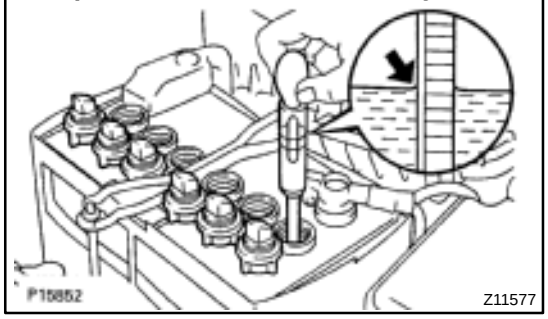

2. Except Maintenance–Free Battery:
CHECK BATTERY SPECIFIC GRAVITY

Check the specific gravity of each cell.

Standard specific gravity: 1.25 – 1.29 at 20˚C (68˚F)

If the specific gravity is less than specification, charge the battery.

Maintenance–Free Battery Voltmeter

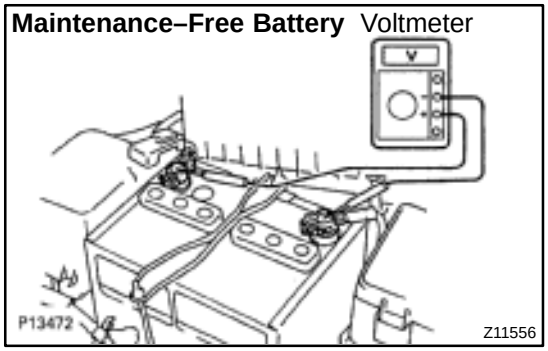

3. Maintenance–Free Battery:
CHECK BATTERY VOLTAGE

(a) After having driven the vehicle and in the case that 20 minutes have not passed after having stopped the engine, turn the ignition switch ON and turn on the electrical system (headlight, blower motor, rear defogger etc.) for 60 seconds to remove the surface charge.

(b) Turn the ignition switch OFF and turn off the electrical systems.

(c) Measure the battery voltage between the negative (–) and positive (+) terminals of the battery.

Standard voltage: 12.5 – 12.9 V at 20˚C (68˚F)

If the voltage is less than specification, charge the battery.

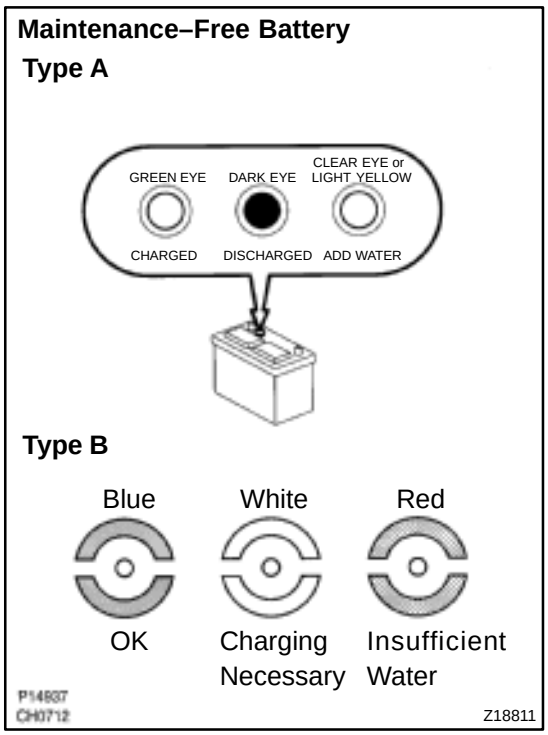

HINT:

Check the indicator as shown in the illustration.

4. CHECK BATTERY TERMINALS, FUSIBLE LINK AND FUSES

(a) Check that the battery terminals are not loose or corroded.

If the terminals are corroded, clean the terminals.

(b) Check the fusible link, H–fuses, M–fuse and fuses for continuity.

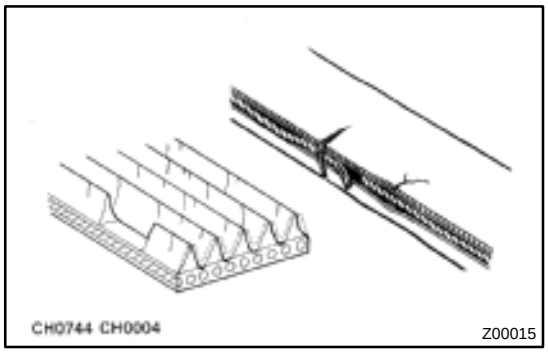

5. INSPECT DRIVE BELTS

(a) Visually check the drive belt for excessive wear, frayed cords etc.

If any defect has been found, replace the drive belt.

HINT:

Cracks on the rib side of a drive belt are considered acceptable. If the drive belt has chunks missing from the ribs, it should be replaced.

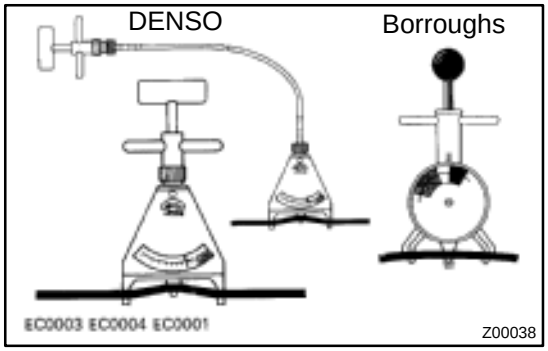

(b) Using a belt tension gauge, measure the belt tension.

Belt tension gauge:

DENSO BTG–20 (95506–00020)

Borroughs No. BT–33–73F

Drive belt tension:

New belt	175 ± 5 lbf
Used belt	115 ± 20 lbf

If the belt tension is not as specified, adjust it.

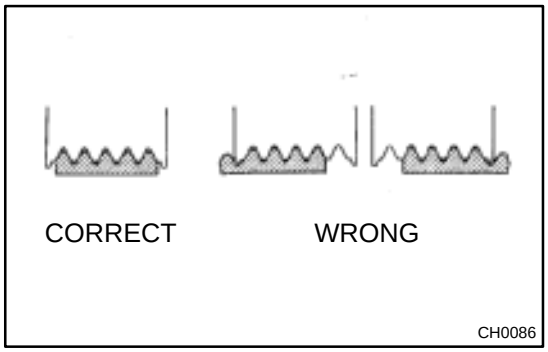

HINT:

- "New belt" refers to a belt which has been used less than 5 minutes on a running engine.
- "Used belt" refers to a belt which has been used on a running engine for 5 minutes or more.
- After installing a belt, check that it fits properly in the ribbed grooves.
- Check with your hand to confirm that the belt has not slipped out of the groove on the bottom of the pulley.

◆ After installing a new belt, run the engine for about 5 minutes and recheck the belt tension.

6. VISUALLY CHECK GENERATOR WIRING AND LISTEN FOR ABNORMAL NOISES

(a) Check that the wiring is in good condition.

(b) Check that there is no abnormal noise from the generator while the engine is running.

7. CHECK DISCHARGE WARNING LIGHT CIRCUIT

(a) Warm up the engine and then turn it off.

(b) Turn off all accessories.

(c) Turn the ignition switch ”ON”. Check that the discharge warning light is lit.

(d) Start the engine. Check that the light goes off.

If the light does not go off as specified, troubleshoot the discharge light circuit.

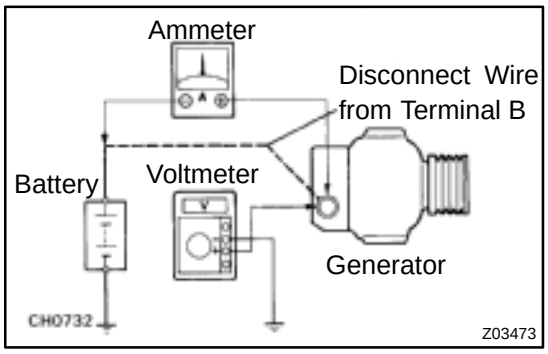

8. INSPECT CHARGING CIRCUIT WITHOUT LOAD

HINT:

If a battery/generator tester is available, connect the tester to the charging circuit as per manufacturer’s instructions.

(a) If a tester is not available, connect a voltmeter and ammeter to the charging circuit as follows:

◆ Disconnect the wire from terminal B of the generator, and connect it to the negative (–) tester probe of the ammeter.

◆ Connect the positive (+) tester probe of the ammeter to terminal B of the generator.

◆ Connect the positive (+) tester probe of the voltmeter to terminal B of the generator.

◆ Ground the negative (–) tester probe of the voltmeter.

(b) Check the charging circuit as follows:

With the engine running from idling to 2,000 rpm, check the reading on the ammeter and voltmeter.

Standard amperage: 10 A or less

Standard voltage: 13.5 – 15.1 V

If the voltmeter reading is more than standard voltage, replace the voltage regulator.

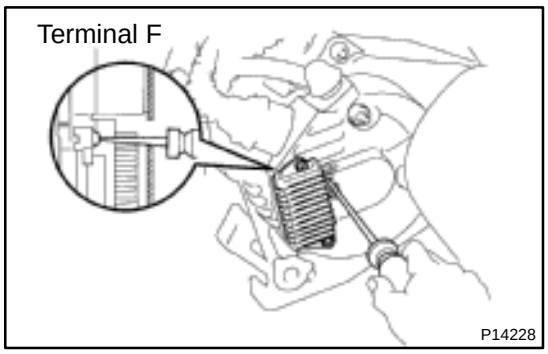

If the voltmeter reading is less than standard voltage, check the voltage regulator and generator as follows:

- With terminal F grounded, start the engine and check the voltmeter reading of terminal B.
- If the voltmeter reading is more than standard voltage, replace the voltage regulator.
- If the voltmeter reading is less than standard voltage, check the generator.

9. INSPECT CHARGING CIRCUIT WITH LOAD

(a) With the engine running at 2,000 rpm, turn on the high beam headlights and place the heater blower switch at "HI".

(b) Check the reading on the ammeter.

Standard amperage: 30 A or more

If the ammeter reading is less than the standard amperage, repair the generator.

HINT:

If the battery is fully charged, the indication will sometimes be less than standard amperage.

GENERATOR

CH01E–01

COMPONENTS

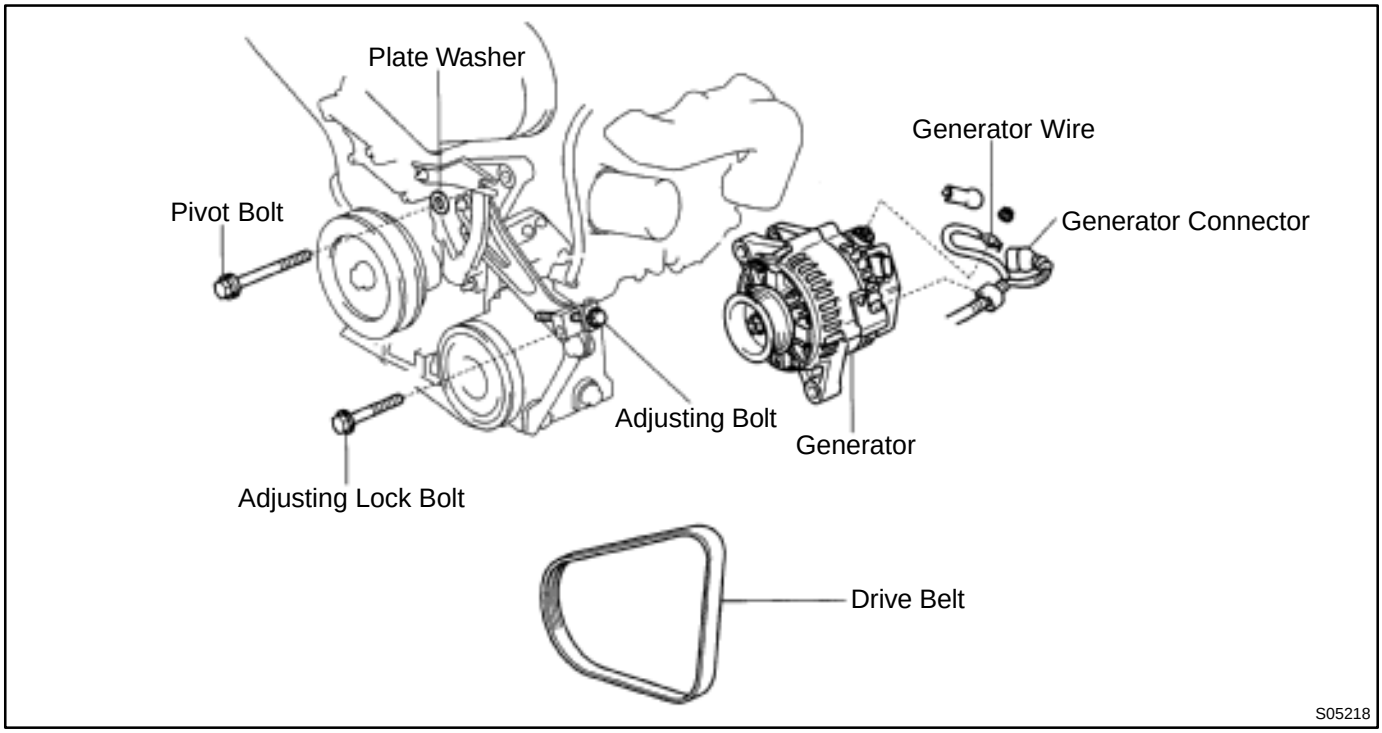

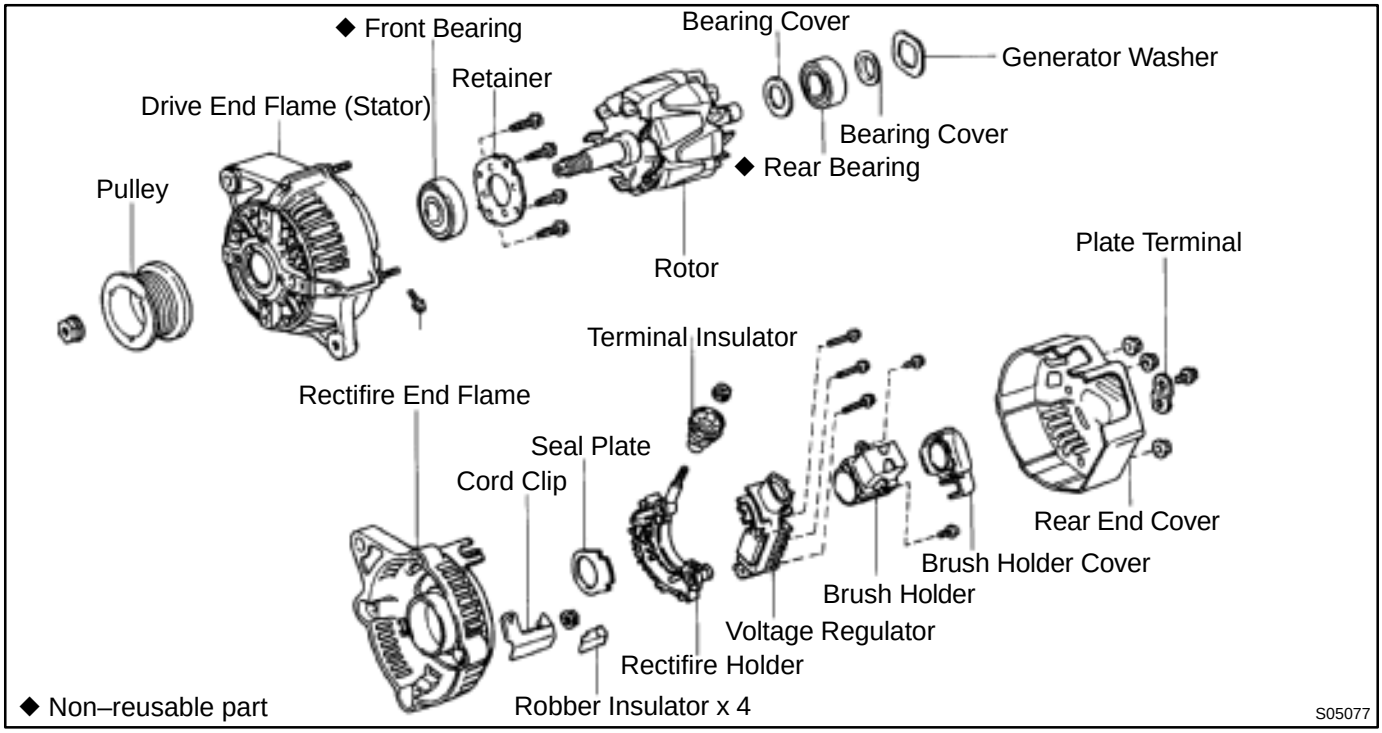

CH01F–01

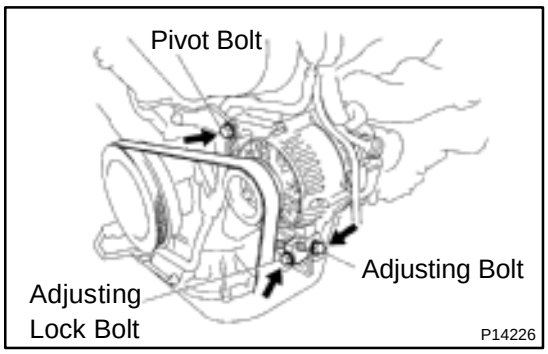

REMOVAL

1. REMOVE DRIVE BELT

Loosen the pivot bolt, adjusting lock bolt, and adjusting bolt, and remove the drive belt.

Torque:
Pivot bolt: 56 N·m (570 kgf·cm, 41 ft·lbf)
Lock bolt: 18 N·m (180 kgf·cm, 13 ft·lbf)

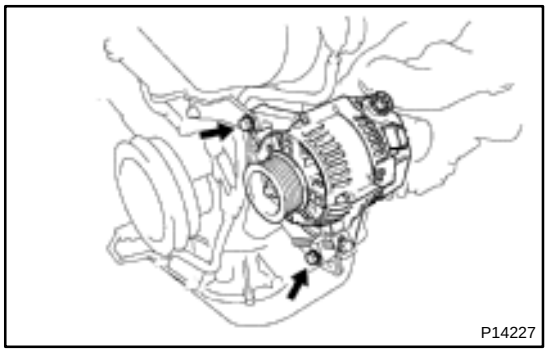

2. REMOVE GENERATOR

(a) Disconnect the generator connector.
(b) Remove the nut, and disconnect the generator wire.
(c) Disconnect the wire harness from the clip.
(d) Remove the pivot bolt, plate washer, adjusting lock bolt and generator.

CH01G–01

DISASSEMBLY

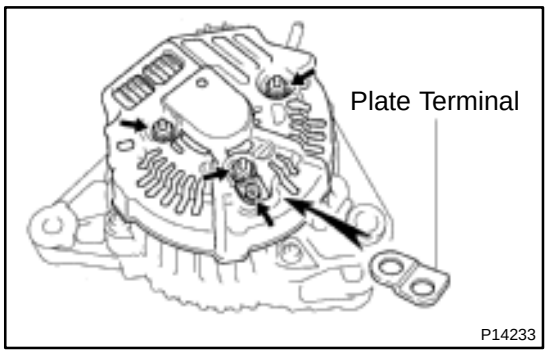

1. REMOVE REAR END COVER

(a) Remove the nut and terminal insulator.

(b) Remove the screw, 3 nuts, plate terminal and end cover.

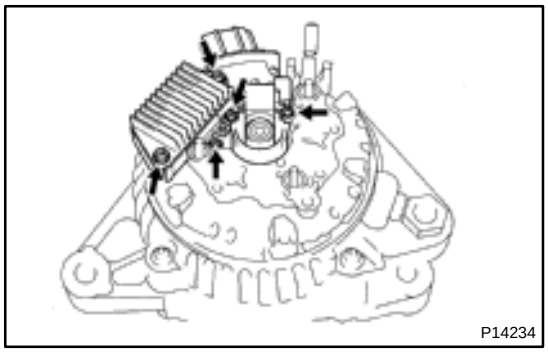

2. REMOVE BRUSH HOLDER AND VOLTAGE REGULATOR

(a) Remove the brush holder cover from the brush holder.

(b) Remove the 5 screws, brush holder and voltage regulator.

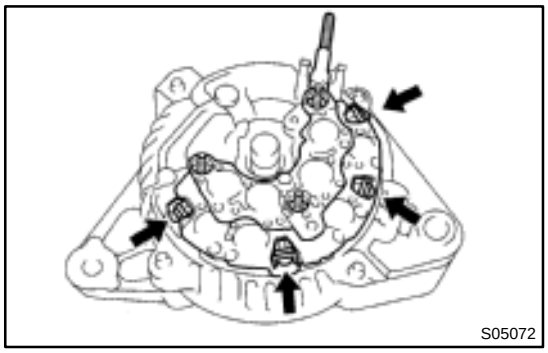

3. REMOVE RECTIFIER HOLDER

(a) Remove the 4 screws and rectifier holder.

(b) Remove the 4 rubber insulators.

(c) Remove the seal plate.

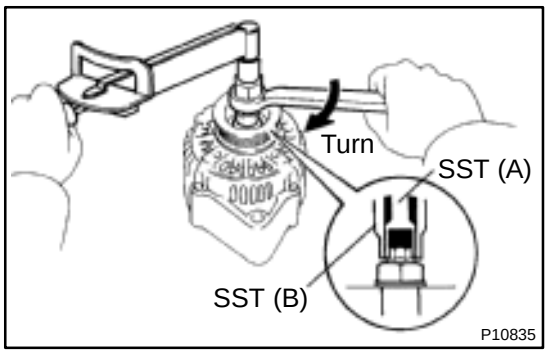

4. REMOVE PULLEY

(a) Hold SST (A) with a torque wrench, and tighten SST (B) clockwise to the specified torque.

SST 09820–63010

Torque: 39 N·m (400 kgf·cm, 29 ft·lbf)

(b) Check that SST (A) is secured to the rotor shaft.

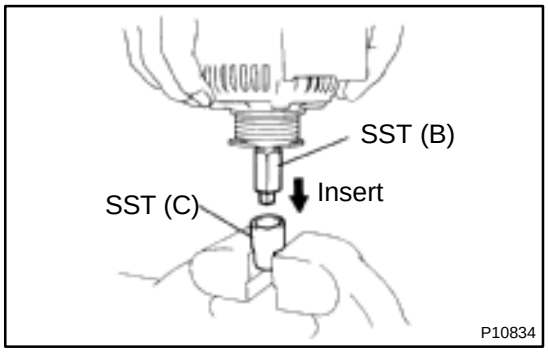

(c) Mount SST (C) in a vise.

(d) Insert SST (B) into SST (C), and attach the pulley nut to SST (C).

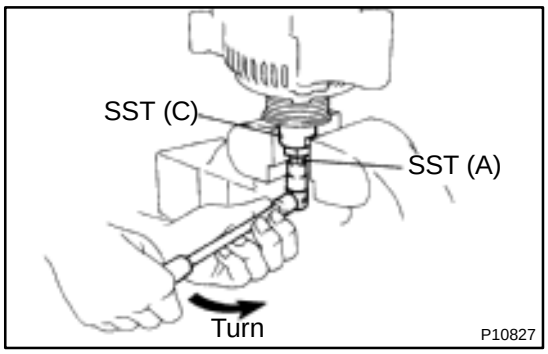

(e) To loosen the pulley nut, turn SST (A) in the direction shown in the illustration.

NOTICE:

To prevent damage to the rotor shaft, do not loosen the pulley nut more than one–half of a turn.

(f) Remove the generator from SST (C).

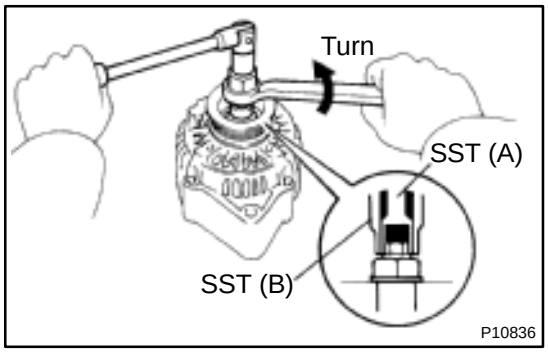

(g) Turn SST (B), and remove SST (A and B).

(h) Remove the pulley nut and pulley.

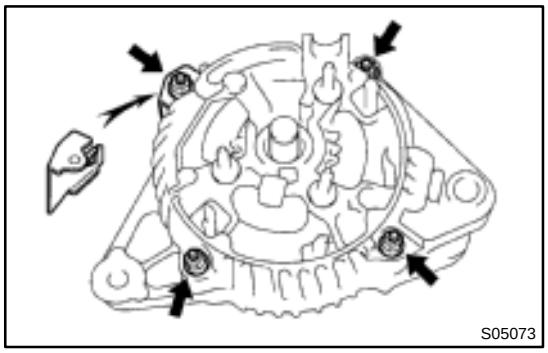

5. REMOVE RECTIFIER END FRAME

(a) Remove the 4 nuts and cord clip.

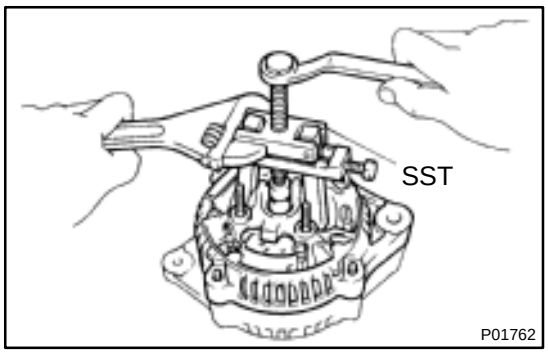

(b) Using SST, remove the rectifier end frame.
SST 09286–46011

(c) Remove the generator washer.

6. REMOVE ROTOR FROM DRIVE END FRAME

CH01H–01

INSPECTION

1. INSPECT ROTOR

(a) Check the rotor for open circuit.
Using an ohmmeter, check that there is continuity between the slip rings.
Standard resistance: 2.1 – 2.5 Ω at 20˚C (68˚F)

If there is no continuity, replace the rotor.

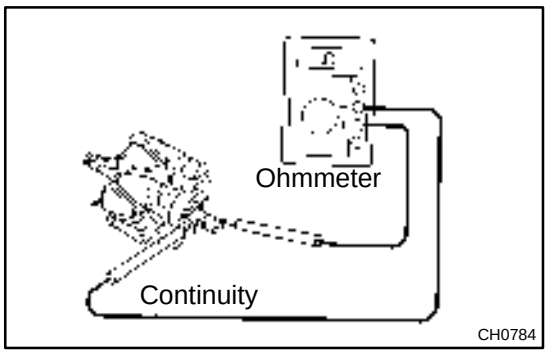

(b) Check the rotor for ground.
Using an ohmmeter, check that there is no continuity between the slip ring and rotor.

If there is continuity, replace the rotor.

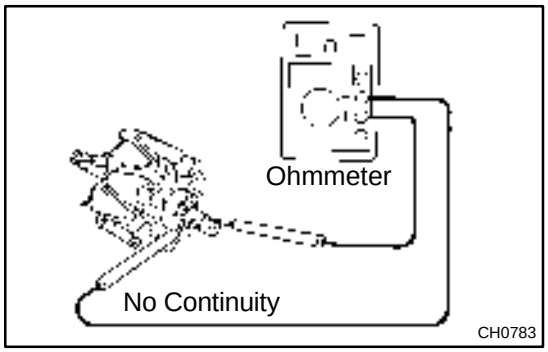

(c) Check that the slip rings are not rough or scored.

If rough or scored, replace the rotor.

(d) Using vernier calipers, measure the slip ring diameter.
Standard diameter: 14.2 – 14.4 mm (0.559–0.567 in.)
Minimum diameter: 12.8 mm (0.504 in.)

If the diameter is less than minimum, replace the rotor.

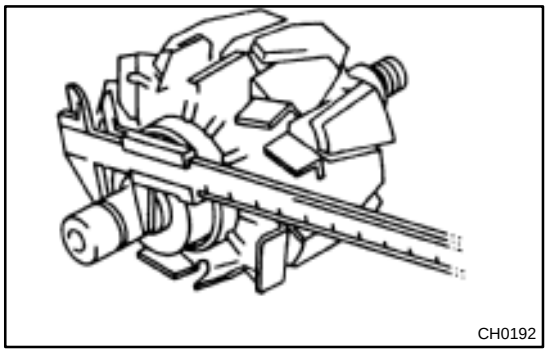

2. INSPECT STATOR (DRIVE END FRAME)

(a) Check the stator for open circuit.
Using an ohmmeter, check that there is continuity between the coil leads.

If there is no continuity, replace the drive end frame assembly.

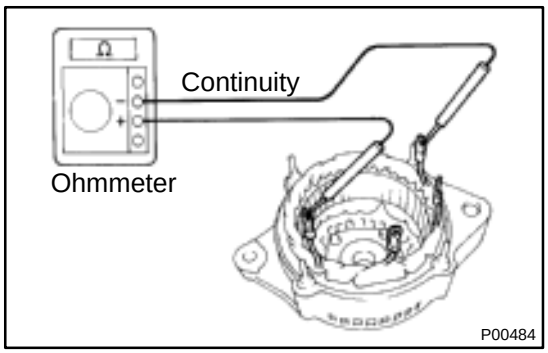

(b) Check the stator for ground.
Using an ohmmeter, check that there is no continuity between the coil lead and drive end frame.

If there is continuity, replace the drive end frame assembly.

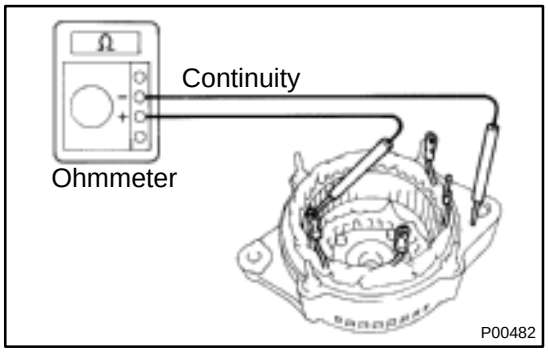

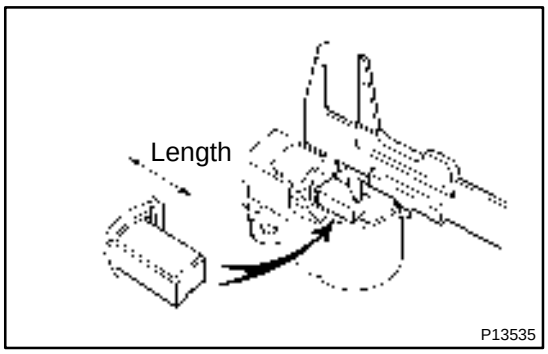

3. INSPECT BRUSHES

Using a vernier caliper, measure the exposed brush length.

Standard exposed length: 10.5 mm (0.413 in.)

Minimum exposed length: 1.5 mm (0.059 in.)

If the exposed length is less than minimum, replace the brushes and brush holder assembly.

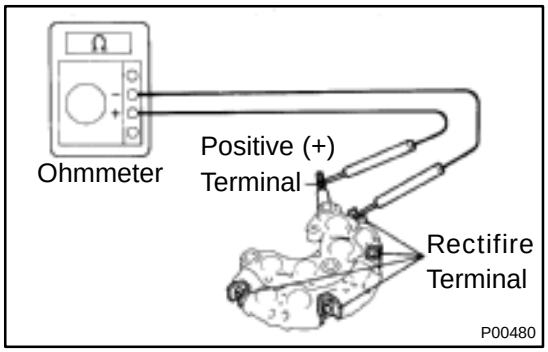

4. INSPECT RECTIFIERS (RECTIFIRE HOLDER)

(a) Check the positive (+) rectifire.

(1) Using an ohmmeter, connect one tester probe to the positive (+) terminal and the other to each rectifier terminal.

(2) Reverse the polarity of the tester probes and repeat step (a).

(3) Check that one shows continuity and the other shows no continuity.

If continuity is not as specified, replace the rectifier holder.

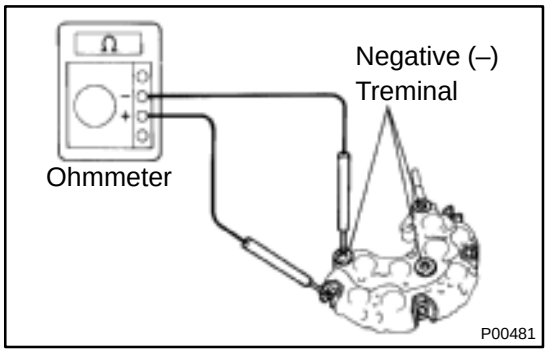

(b) Check the negative (–) rectifire.

(1) Using an ohmmeter, connect one tester probe to each negative (–) terminal and the other to each rectifier terminal.

(2) Reverse the polarity of the tester probes and repeat step (a).

(3) Check that one shows continuity and the other shows no continuity.

If continuity is not as specified, replace the rectifier holder.

5. INSPECT BEARING

Check the bearing is not rough or worn.

If necessary, replace the bearing. (See page CH–11)

CH01I–01

REPLACEMENT

1. REPLACE FRONT BEARING

(a) Remove the 4 screws, bearing retainer and bearing.

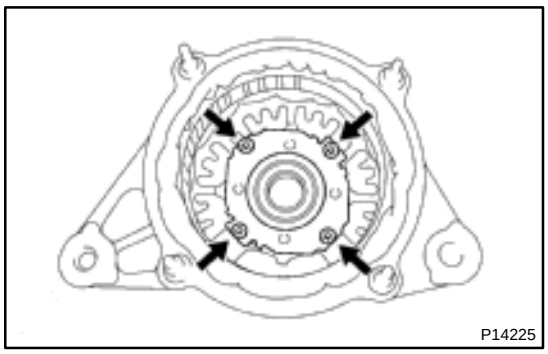
P14225

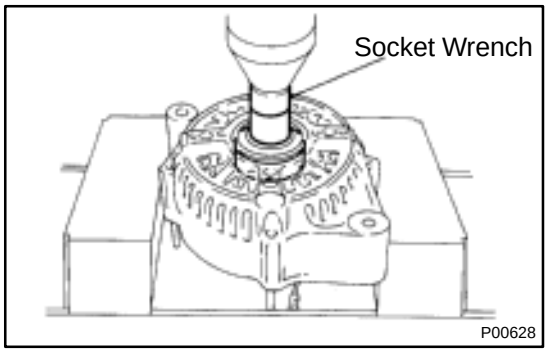

P00628

(b) Using a socket wrench and press, press out the bearing.

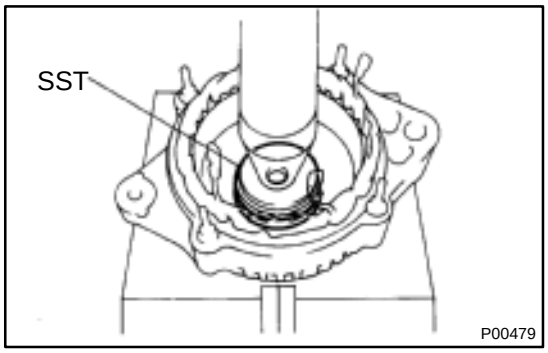

P00479

(c) Using SST and a press, press in a new bearing.
SST 09950–60010 (09951–00500)

(d) Install the bearing retainer with the 4 screws.
Torque: 3.0 N·m (31 kgf·cm, 27 in.·lbf)

2. REPLACE REAR BEARING

(a) Using SST, remove the bearing cover (outside) and bearing.
SST 09820–00021

NOTICE:
Be careful not to damage the fan.

(b) Remove the bearing cover (inside).

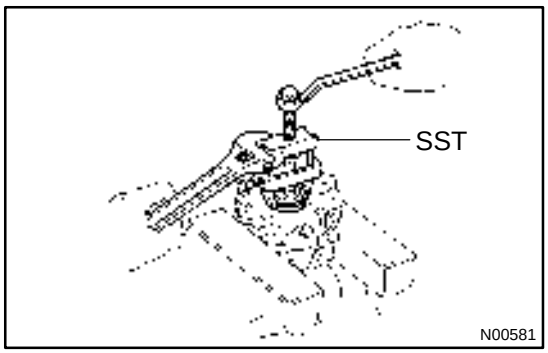

N00581

(c) Place the bearing cover (inside) on the rotor.

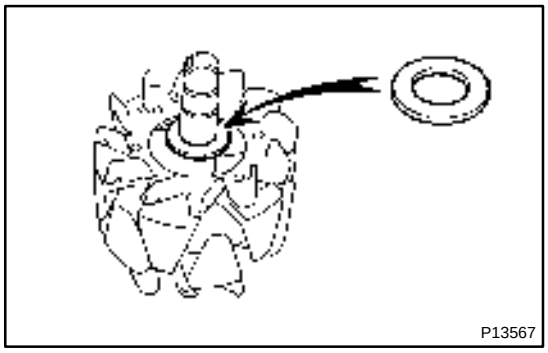
P13567

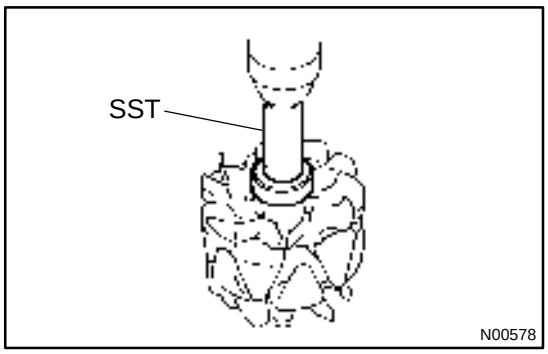

(d) Using SST and a press, press in a new bearing.
SST 09820–00030

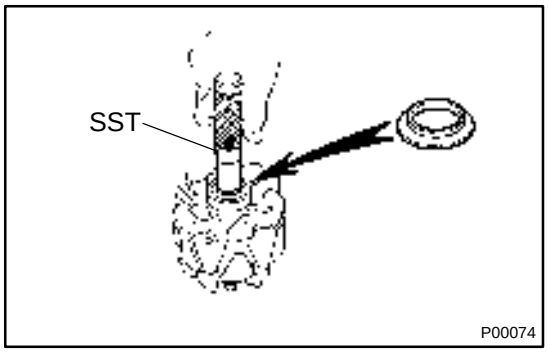

(e) Using SST, push in the bearing cover (outside).
SST 09285–76010

CH01J–01

REASSEMBLY

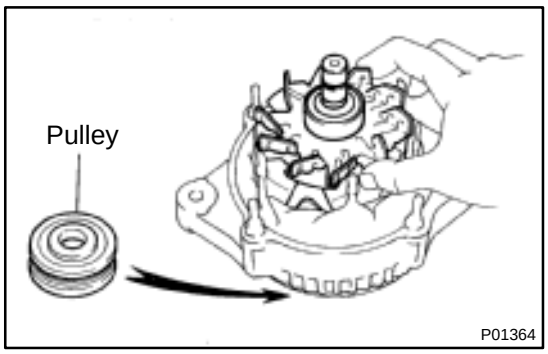

1. INSTALL ROTOR TO DRIVE END FRAME

(a) Place the rectifier end frame on the pulley.

(b) Install the rotor to the rectifier end frame.

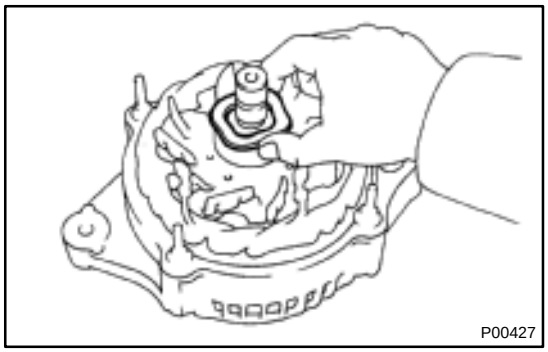

2. INSTALL RECTIFIER END FRAME

(a) Place the generator washer on the rotor.

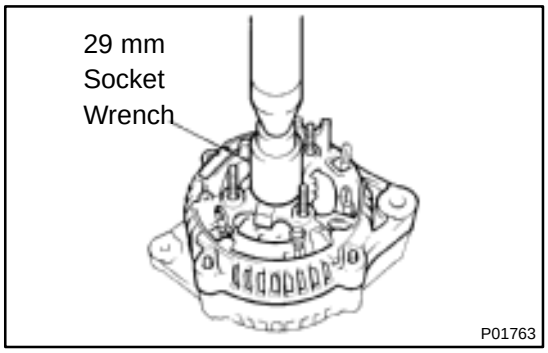

(b) Using a 29 mm socket wrench and press, slowly press in the rectifier end frame.

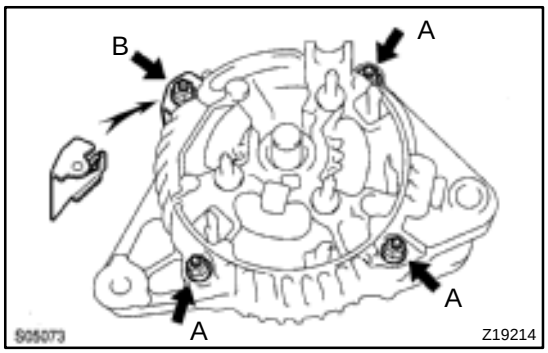

(c) Install the cord clip with the 4 nuts.

Torque:
Nut A: 4.5 N·m (46 kgf·cm, 40 in.·lbf)
Nut B: 5.4 N·m (55 kgf·cm, 48 in.·lbf)

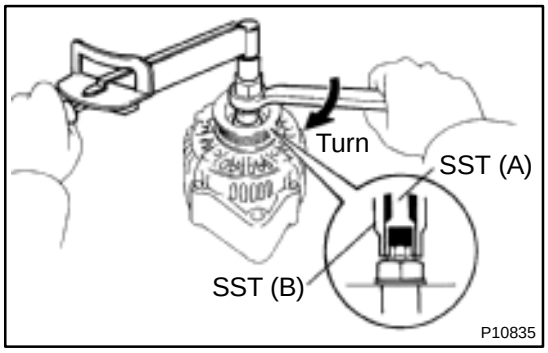

3. INSTALL PULLEY

(a) Install the pulley to the rotor shaft by tightening the pulley nut by hand.

(b) Hold SST (A) with a torque wrench, and tighten SST (B) clockwise to the specified torque.
SST 09820–63010
Torque: 39 N·m (400 kgf·cm, 29 ft·lbf)

(c) Check that SST (A) is secured to the pulley shaft.

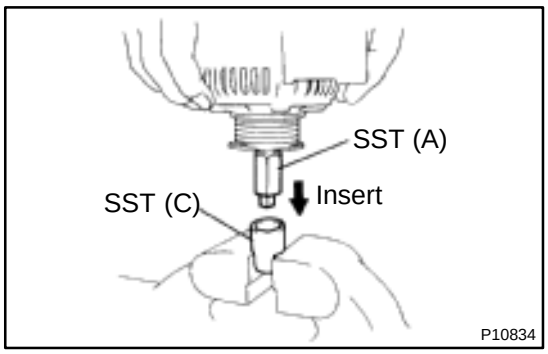

(d) Mount SST (C) in a vise.
(e) Insert SST (B) into SST (C), and attach the pulley nut to SST (C).

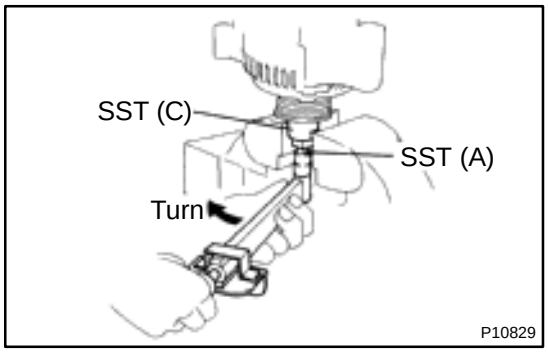

(f) To torque the pulley nut, turn SST (A) in the direction shown in the illustration.
Torque: 110.5 N·m (1,125 kgf·cm, 81 ft·lbf)
(g) Remove the generator from SST (C).

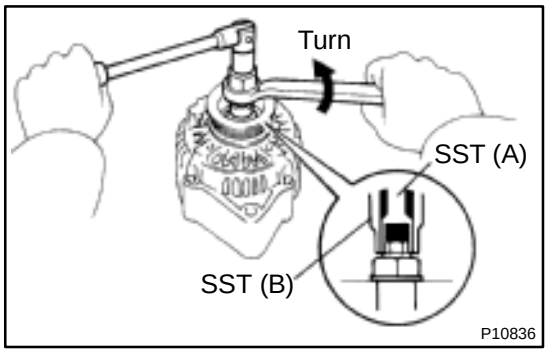

(h) Turn SST (B), and remove SST (A and B).

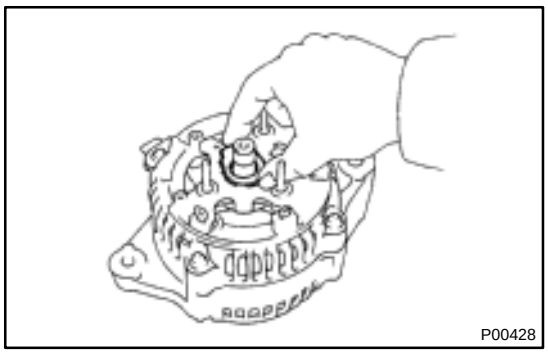

4. INSTALL RECTIFIER HOLDER
(a) Place the seal plate on the rectifier end frame.

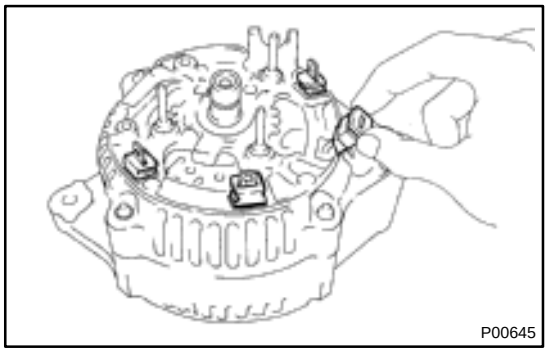

(b) Install the 4 rubber insulators on the lead wires.

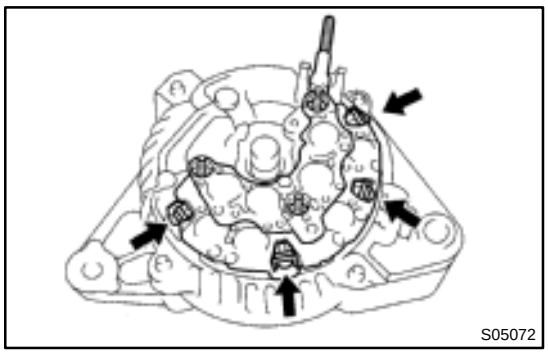

(c) Install the rectifier holder with the 4 screws.
Torque: 2.9 N·m (30 kgf·cm, 26 in.·lbf)

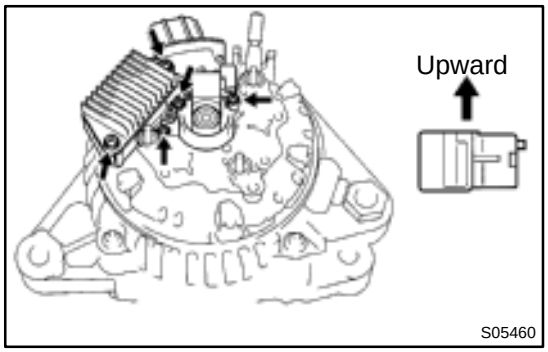

5. INSTALL VOLTAGE REGULATOR AND BRUSH HOLDER

(a) Place the voltage regulator and brush holder on the rectifier end frame.

NOTICE:
Be careful of the holder installation direction.

(b) Install the 5 screws.
Torque: 2.0 N·m (20 kgf·cm, 18 in.·lbf)

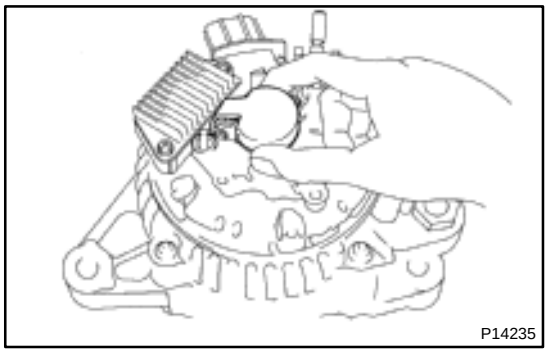

(c) Place the brush holder cover on the brush holder.

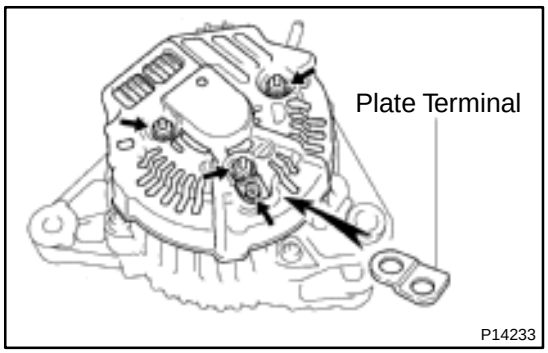

6. INSTALL REAR END COVER

(a) Install the end cover and plate terminal with the 3 nuts and screw.
Torque:
Screw: 3.9 N·m (39 kgf·cm, 35 in.·lbf)
Nut: 4.4 N·m (45 kgf·cm, 39 in.·lbf)

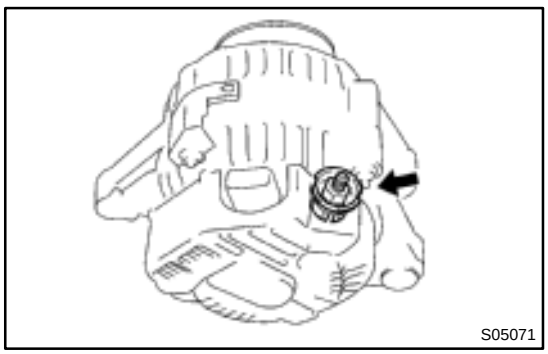

(b) Install the terminal insulator with the nut.
Torque: 4.1 N·m (42 kgf·cm, 36 in.·lbf)

7. CHECK THAT ROTOR ROTATES SMOOTHLY

CH01K–01

INSTALLATION

Installation is in the reverse order of removal. (See page ST–5)

TROUBLESHOOTING

CL034–01

PROBLEM SYMPTOMS TABLE

Use the table below to help you find the cause of the problem. The numbers indicate the priority of the likely cause of the problem. Check each part in order. If necessary, replace these parts.

Symptom	Suspect Area	See page
Clutch grabs/chatters	1. Engine mounting (Loosen)	–
	2. Clutch disc (Runout is excessive)	CL–17
	3. Clutch disc (Oily)	CL–17
	4. Clutch disc (Worn out)	CL–17
	5. Clutch disc torsion rubber (Damaged)	CL–17
	6. Clutch disc (Glazed)	CL–17
	7. Diaphragm spring (Out of tip alignment)	CL–19
Clutch pedal spongy	1. Clutch line (Air in line)	–
	2. Master cylinder cup (Damaged)	CL–4
	3. Release cylinder cup (Damaged)	CL–9
Clutch noisy	1. Release bearing (Worn, dirty, or damaged)	CL–19
	2. Clutch disc torsion rubber (Damaged)	CL–17
Clutch slips	1. Clutch pedal (Freeplay out of adjustment)	CL–2
	2. Clutch disc (Oily)	CL–17
	3. Clutch disc (Worn out)	CL–17
	4. Diaphragm spring (Damaged)	CL–17
	5. Pressure plate (Distortion)	CL–17
	6. Flywheel (Distortion)	–
Clutch does not disengage	1. Clutch pedal (Freeplay out of adjustment)	CL–2
	2. Clutch line (Air in line)	–
	3. Master cylinder cup (Damaged)	CL–4
	4. Release cylinder cup (Damaged)	CL–9
	5. Clutch disc (out of true)	CL–17
	6. Clutch disc (Runout is excessive)	CL–17
	7. Clutch disc (Lining broken)	CL–17
	8. Clutch disc (Dirty or burned)	CL–17
	9. Clutch disc (Oily)	CL–17
	10. Clutch disc (Lack of spline grease)	CL–19
	11. Diaphragm spring (Damaged)	CL–17
	12. Diaphragm spring (Out of tip alignment)	CL–19
	13. Pressure plate (Distortion)	CL–17

CLUTCH PEDAL

CL035–01

INSPECTION

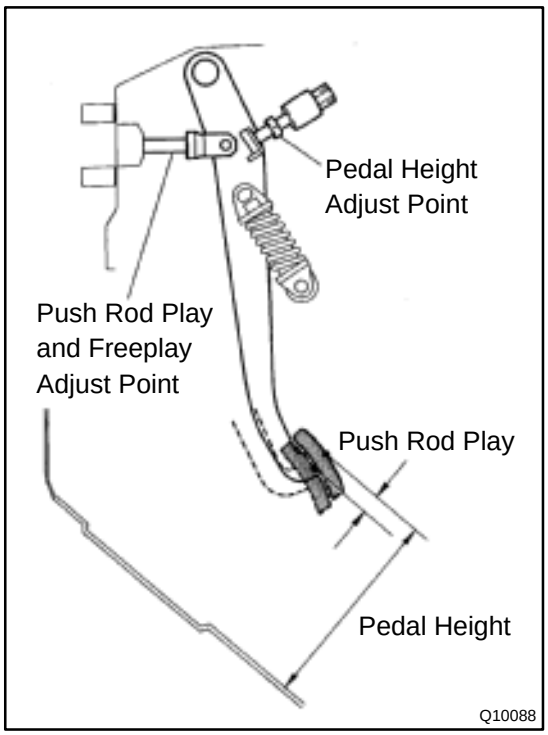

1. CHECK THAT PEDAL HEIGHT IS CORRECT

Pedal height from asphalt sheet:
1MZ–FE: 161.8 – 171.8 mm (6.370 – 6.764 in.)
5S–FE: 156.8 – 166.8 mm (6.173 – 6.567 in.)

2. IF NECESSARY, ADJUST PEDAL HEIGHT

Loosen the lock nut and turn the stopper bolt until the height is correct. Tighten the lock nut.

3. CHECK THAT PEDAL FREEPLAY AND PUSH ROD PLAY ARE CORRECT

Push in on the pedal until the beginning of clutch resistance is felt.

Pedal freeplay: 5.0 – 15.0 mm (0.197 – 0.591 in.)

Gently push the pedal until the resistance begins to increase a little.

Push rod play at pedal top:
1.0 – 5.0 mm (0.039 – 0.197 in.)

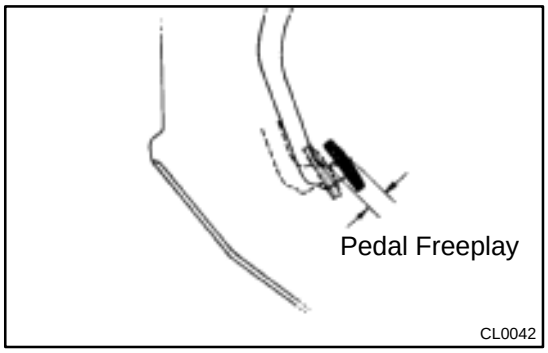

4. IF NECESSARY, ADJUST PEDAL FREEPLAY AND PUSH ROD PLAY

(a) Loosen the lock nut and turn the push rod until the free-play and push rod play are correct.
(b) Tighten the lock nut.
(c) After adjusting the pedal freeplay, check the pedal height.
(d) Connect the air duct and install the lower finish panel.

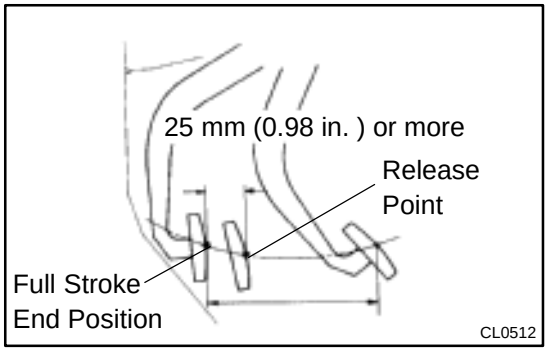

5. INSPECT CLUTCH RELEASE POINT

(a) Pull the parking brake lever and install wheel stopper.
(b) Start the engine and idle the engine.
(c) Without depressing the clutch pedal, slowly shift the shift lever into reverse position until the gears contact.
(d) Gradually depress the clutch pedal and measure the stroke distance from the point the gear noise stops (release point) up to the full stroke end position.

Standard distance:
25 mm (0.98 in.) or more
(From pedal stroke end position to release point)

If the distance not as specified, do the following operation.

- Inspect pedal height.
- Inspect push rod play and pedal freeplay.
- Bleed the clutch line.
- Inspect the clutch cover and disc.

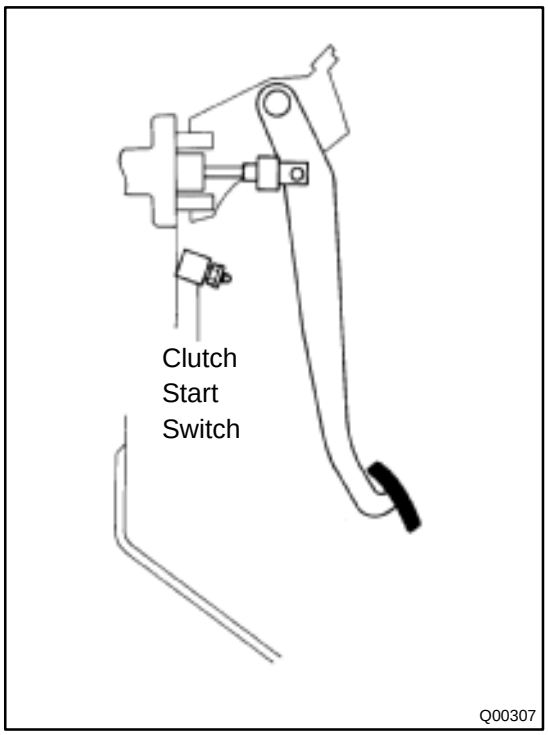

6. CHECK CLUTCH START SYSTEM

(a) Check that the engine does not start when the clutch pedal is released.

(b) Check that the engine starts when the clutch pedal is fully depressed.

If necessary, replace the clutch start switch.

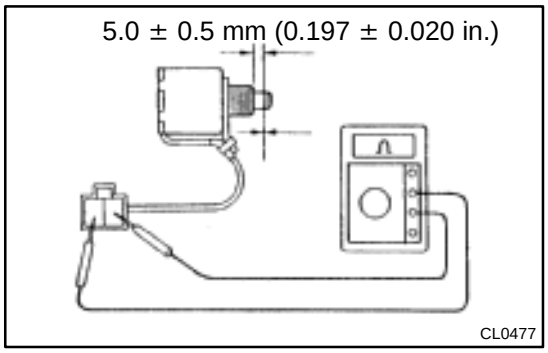

7. INSPECT CONTINUITY OF CLUTCH START SWITCH

Check the continuity between terminals when the switch is ON and OFF.

Switch position	Condition
ON (pushed)	Continuity
OFF (free)	No continuity

CLUTCH MASTER CYLINDER

COMPONENTS

CL036–01

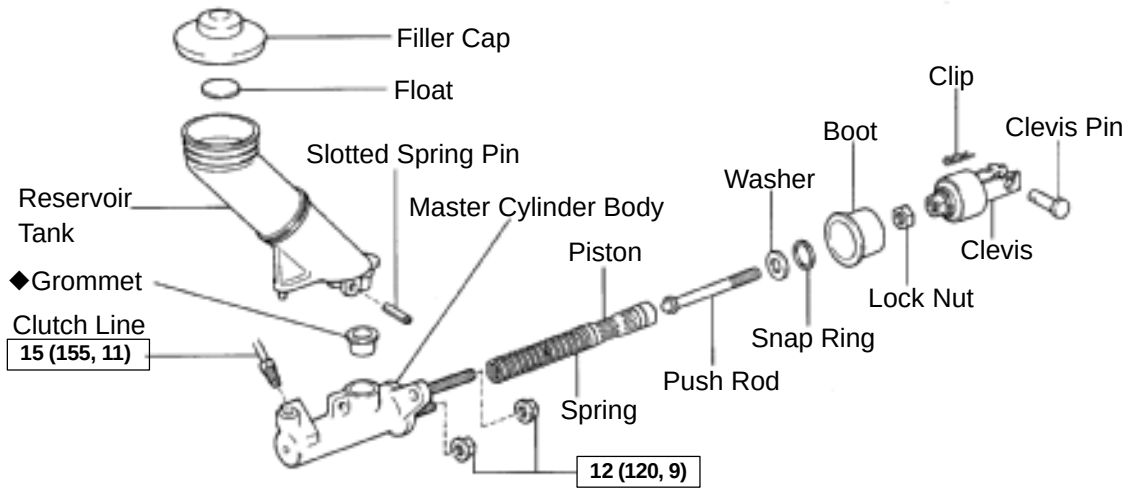

◆Non–reusable part

N·m (kgf·cm, ft·lbf): Specified torque

Q10085

CL037–01

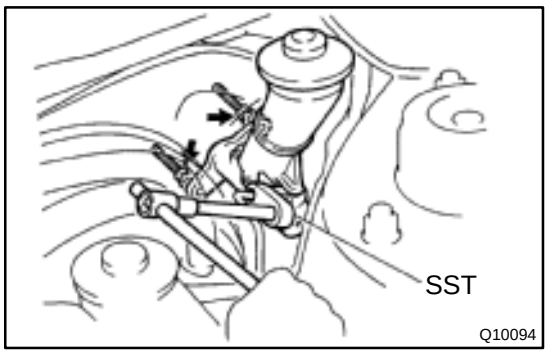

REMOVAL

1. DRAW OUT FLUID WITH SYRINGE

2. DISCONNECT CLUTCH LINE

Using SST, disconnect the clutch line. Use a container to catch the fluid.

SST 09023–00100

Torque: 15 N·m (155 kgf·cm, 11 ft·lbf)

3. REMOVE CLIP AND CLEVIS PIN

4. REMOVE 2 MOUNTING NUTS AND PULL OUT MASTER CYLINDER

Torque: 12 N·m (120 kgf·cm, 9 ft·lbf)

CL038–01

DISASSEMBLY

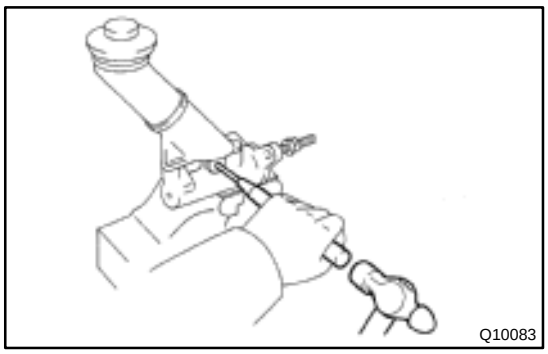

1. REMOVE RESERVOIR TANK

(a) Using a pin punch and hammer, drive out the slotted spring pin.

(b) Remove the reservoir tank and grommet.

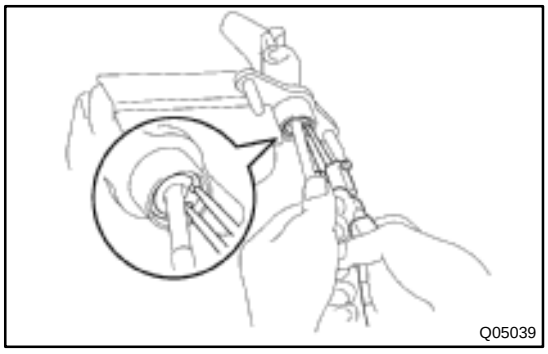

2. REMOVE PUSH ROD

Pull back the boot, and using snap ring pliers, remove the snap ring.

3. REMOVE PISTON

CL039–01

REASSEMBLY

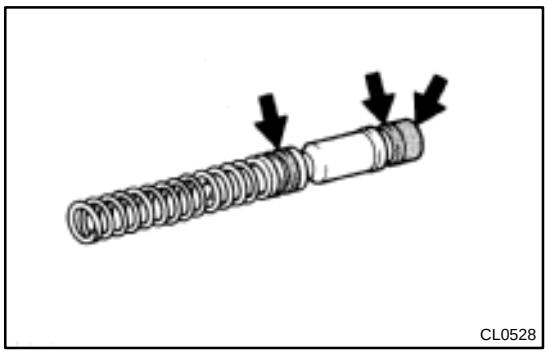
CL0528

1. COAT PARTS WITH LITHIUM SOAP BASE GLYCOL GREASE, AS SHOWN

2. INSERT PISTON INTO CYLINDER

3. INSTALL PUSH ROD ASSEMBLY WITH SNAP RING

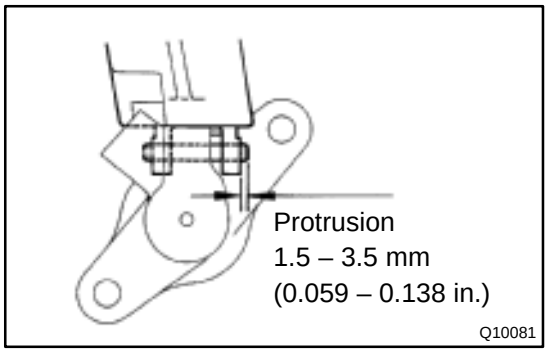

Q10081

4. INSTALL RESERVOIR TANK

(a) Install the reservoir tank and a new grommet.

(b) Using a pin punch and hammer, drive in the slotted spring pin.

CL03A–01

INSTALLATION

Installation is in the reverse order of removal (See page CL–5).

HINT:

After installation, bleed system and adjust clutch pedal (See page CL–2).

CLUTCH RELEASE CYLINDER

CL03B–01

COMPONENTS

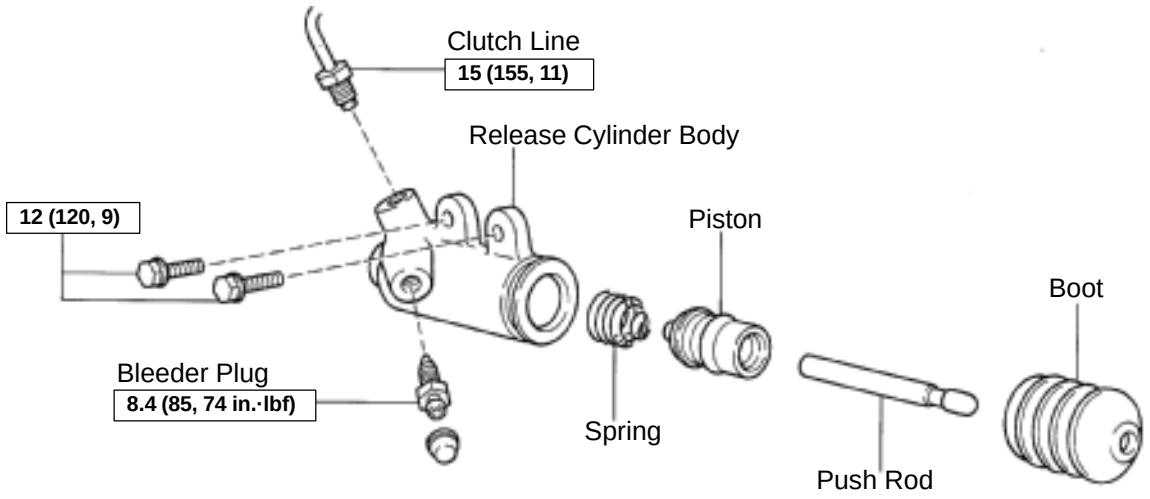

N·m (kgf·cm, ft·lbf) : Specified torque

Q10016

CL03C–01

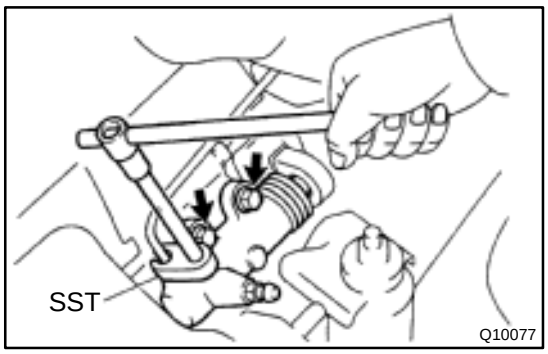

REMOVAL

1. DISCONNECT CLUTCH LINE

Using SST, disconnect the line. Use a container to catch the fluid.

SST 09023–00100

Torque: 15 N·m (155 kgf·cm, 11 ft·lbf)

2. REMOVE 2 BOLTS AND PULL OUT RELEASE CYLINDER

Torque: 12 N·m (120 kgf·cm, 9 ft·lbf)

CL03D–01

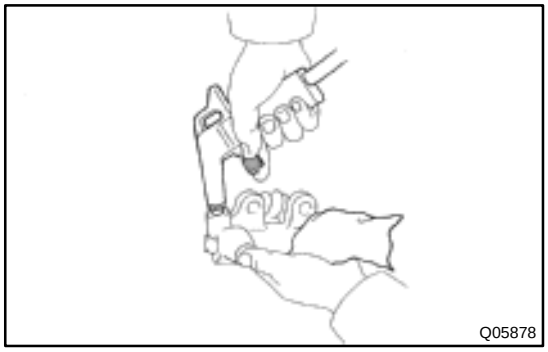
Q05878

DISASSEMBLY

1. REMOVE BLEEDER PLUG

2. PULL OUT BOOT WITH PUSH ROD

3. REMOVE PISTON

Blow compressed air into the release cylinder and remove the piston with spring.

CL03E–01

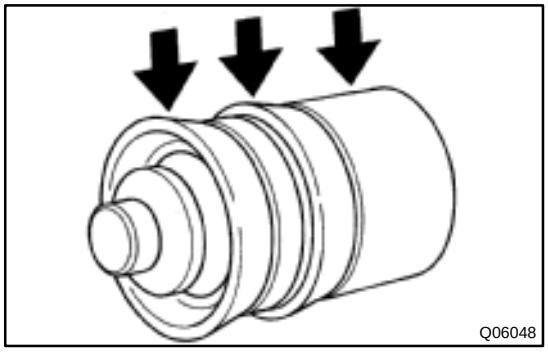

REASSEMBLY

1. **COAT PISTON WITH LITHIUM SOAP BASE GLYCOL GREASE, AS SHOWN**
2. **INSTALL PISTON WITH SPRING INTO CYLINDER**
3. **INSTALL BOOT WITH PUSH ROD TO CYLINDER**
4. **INSTALL BLEEDER PLUG**
   Torque: 8.4 N·m (85 kgf·cm, 74 in.·lbf)

CL03F–01

INSTALLATION

Installation is in the reverse order of removal (See page CL–10).

HINT:

After installation, bleed clutch system.

CLUTCH ACCUMULATOR (1MZ–FE)

CL03G–01

COMPONENTS

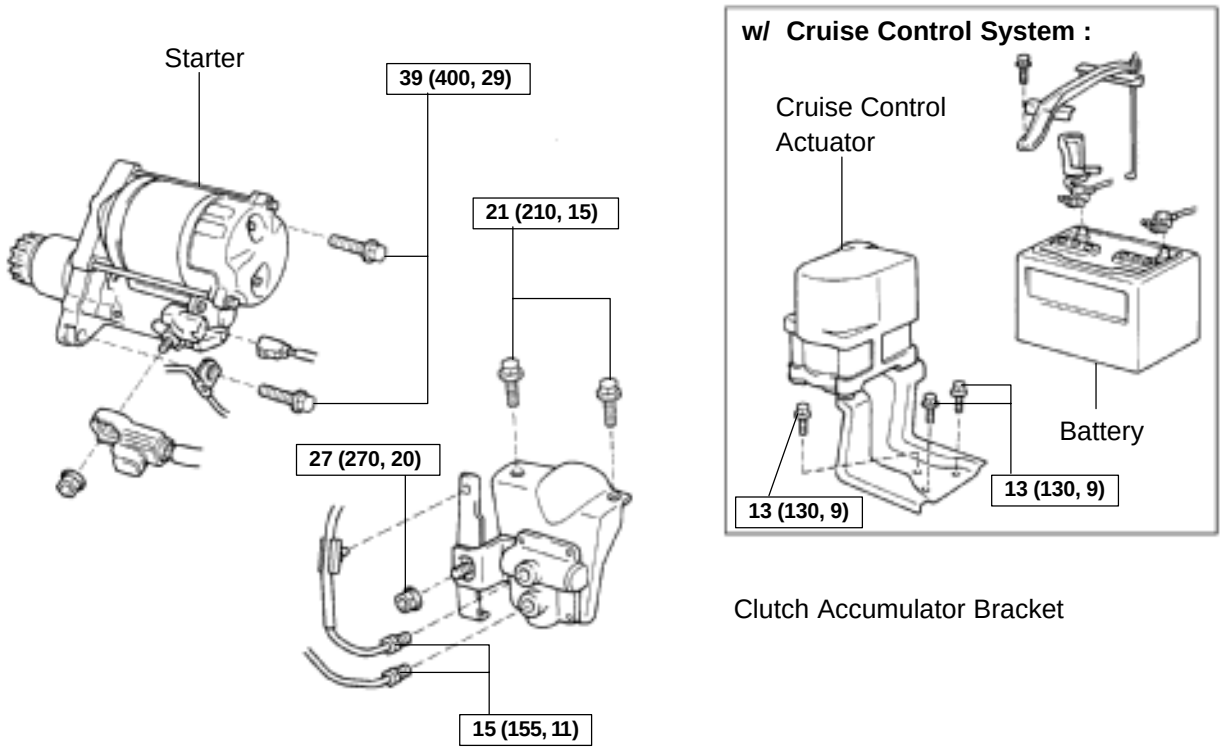

N·m (kgf·cm, ft·lbf) : Specified torque

Q10092

CL03H–01

REMOVAL

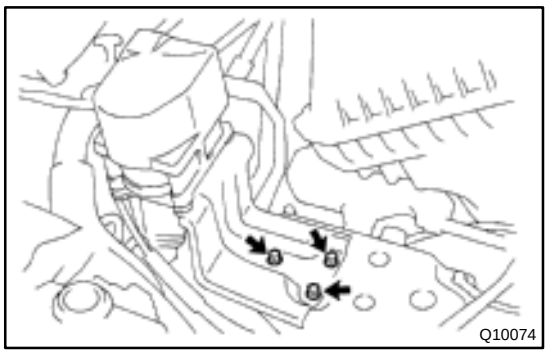

1. w/ Cruise Control System:
REMOVE CRUISE CONTROL ACTUATOR

(a) Remove the battery.

(b) Remove the 3 bolts and cruise control actuator with bracket.
Torque: 13 N·m (130 kgf·cm, 9 ft·lbf)

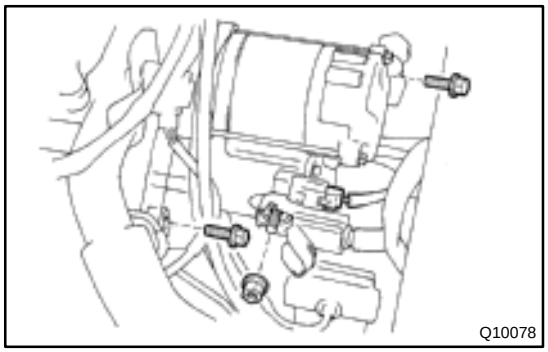

2. REMOVE STARTER

(a) Remove the nut and disconnect the connectors.

(b) Remove the 2 bolt and clamp.
Torque: 39 N·m (400 kgf·cm, 29 ft·lbf)

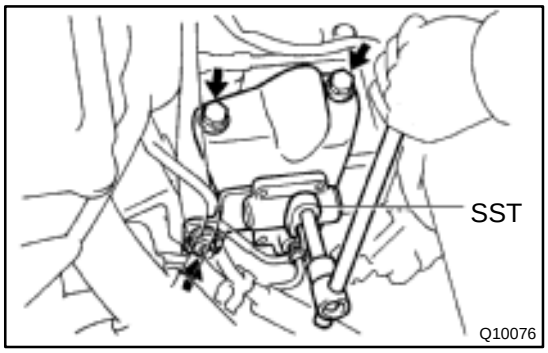

3. REMOVE CLUTCH ACCUMULATOR WITH BRACKET

(a) Using SST, disconnect the clutch lines from the clutch accumulator.
Torque: 15 N·m (155 kgf·cm, 11 ft·lbf)
SST 09023–00100

(b) Remove the 2 bolts and nut.
Torque:
Bolt: 21 N·m (210 kgf·cm, 15 ft·lbf)
Nut: 27 N·m (270 kgf·cm, 20 ft·lbf)

CL03I–01

INSTALLATION

Installation is in the reverse order of removal (See page CL–15).

CLUTCH UNIT

COMPONENTS

CL03J–01

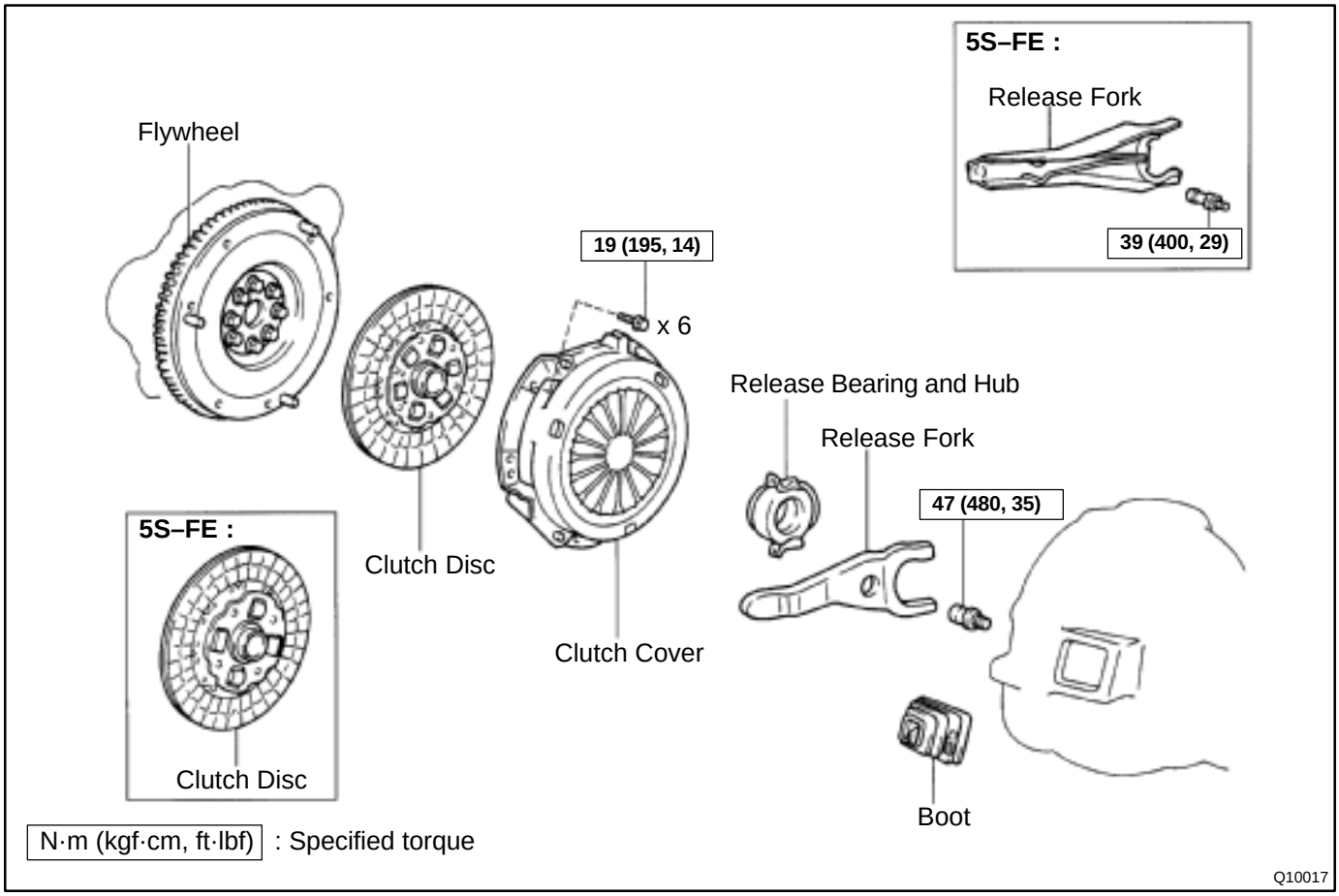

CL03K–01

REMOVAL

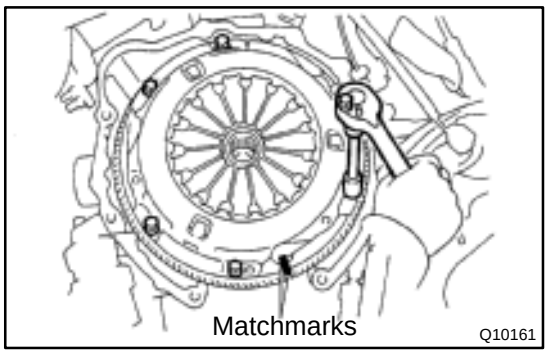

1. REMOVE TRANSAXLE FROM ENGINE
(See page E153 MX–4, S51 MX–4)

2. REMOVE CLUTCH COVER AND DISC

(a) Place matchmarks on the flywheel and clutch cover.

(b) Loosen each set bolt one turn at a time until spring tension is released.

(c) Remove the set bolts, and pull off the clutch cover with the clutch disc.

NOTICE:

Do not drop the clutch disc.

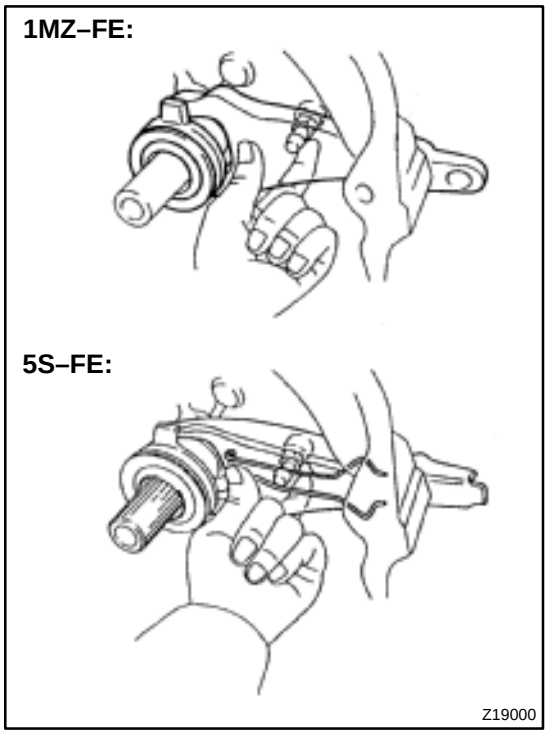

3. REMOVE RELEASE BEARING AND FORK FROM TRANSAXLE

(a) Remove the release bearing together with the fork and then separate them.

(b) Remove the boot.

CL03L–01

INSPECTION

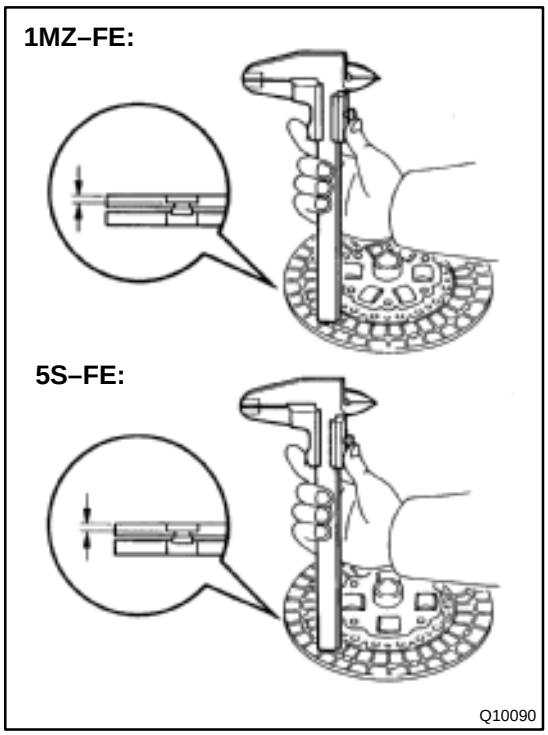

1. INSPECT CLUTCH DISC FOR WEAR OR DAMAGE

Using calipers, measure the rivet head depth.

Minimum rivet depth: 0.3 mm (0.012 in.)

If necessary, replace the clutch disc.

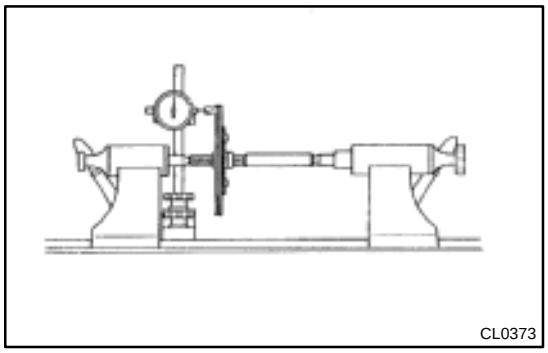

2. INSPECT CLUTCH DISC RUNOUT

Using a dial indicator, check the disc runout.

Maximum runout: 0.8 mm (0.031 in.)

If necessary, replace the clutch disc.

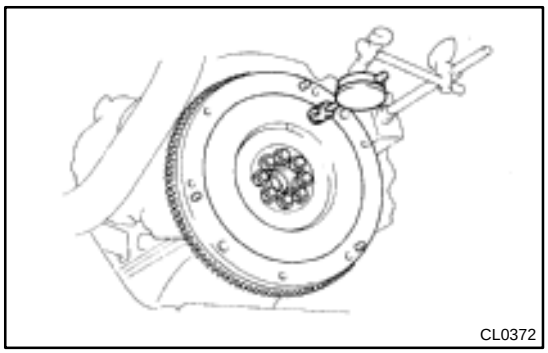

3. INSPECT FLYWHEEL RUNOUT

Using a dial indicator, check the flywheel runout.

Maximum runout: 0.1 mm (0.004 in.)

If necessary, replace the flywheel.

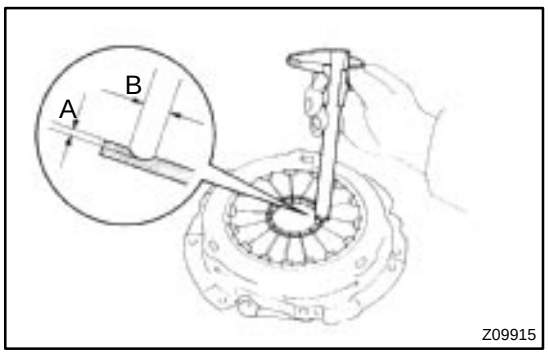

4. INSPECT DIAPHRAGM SPRING FOR WEAR

Using calipers, measure the diaphragm spring for depth and width of wear.

Maximum:

Depth A: 0.6 mm (0.024 in.)

Width B: 5.0 mm (0.197 in.)

If necessary, replace the clutch cover.

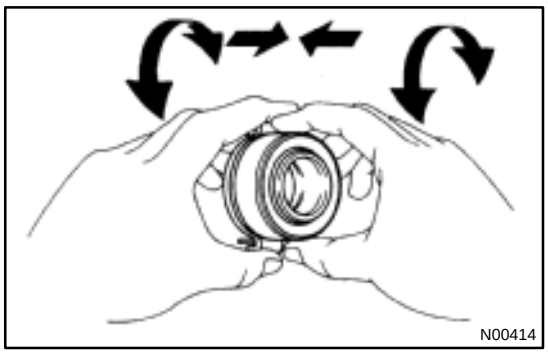

5. INSPECT RELEASE BEARING

Turn the bearing by hand while applying force in the axial direction.

HINT:

The bearing is permanently lubricated and requires no cleaning or lubrication.

If necessary, replace the bearing.

CL03M–02

INSTALLATION

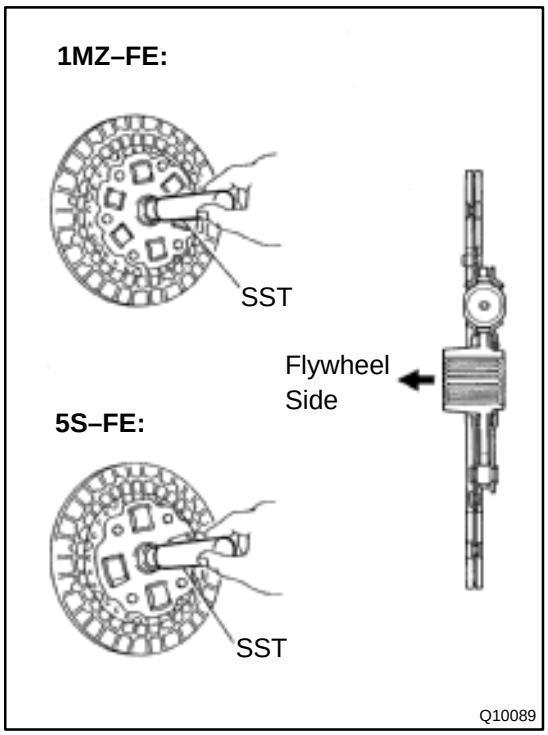

1. INSTALL CLUTCH DISC AND CLUTCH COVER ON FLYWHEEL

(a) 1MZ–FE:
Insert SST in the clutch disc, and then set them.
SST 09301–00220

(b) 5S–FE:
Insert SST in the clutch disc, and then set them.
SST 09301–00210

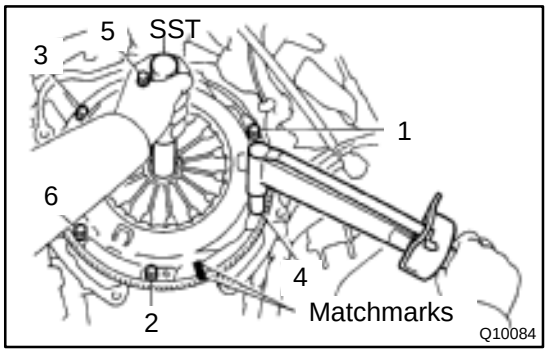

(c) Align the matchmarks on the clutch cover and flywheel.

(d) Torque the bolts on the clutch cover in the order shown.
Torque: 19 N·m (195 kgf·cm, 14 ft·lbf)

HINT:
Temporarily tighten the No.3 bolt.

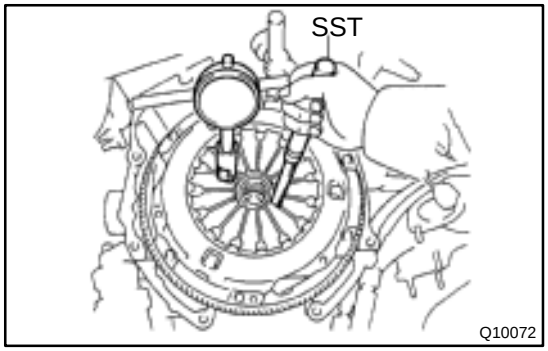

2. CHECK DIAPHRAGM SPRING TIP ALIGNMENT

Using a dial indicator with roller instrument, check the diaphragm spring tip alignment.

Maximum non–alignment: 0.5 mm (0.020 in.)

If alignment is not as specified, using SST, adjust the diaphragm spring tip alignment.

SST 09333–00013

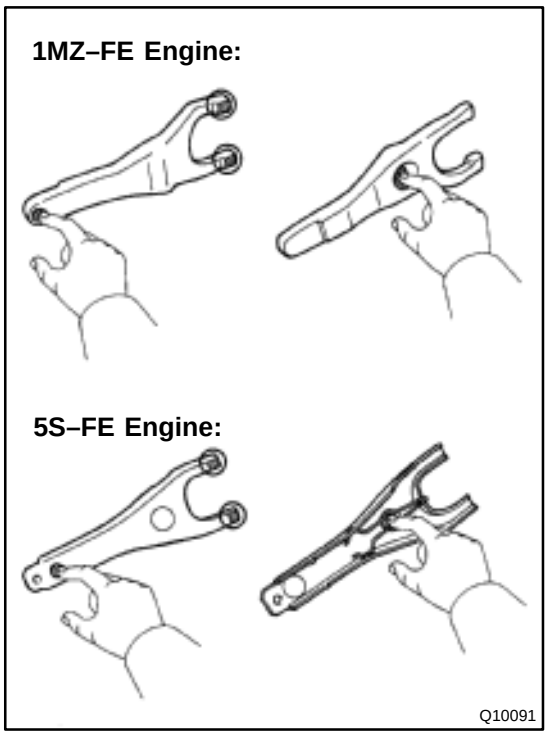

3. APPLY MOLYBDENUM DISULPHIDE LITHIUM BASE GREASE (NLGI NO.2)

(a) Apply release hub grease to these parts:
- Release fork and hub contact point
- Release fork and push rod contact point
- Release fork pivot point

(b) Apply clutch spline grease:
- Clutch disc spline

HINT:

Recommended grease part number 08887–01706 (100 g).

4. INSTALL RELEASE BEARING AND FORK TO TRANSAXLE

Install the bearing to the release fork, and then install them to the transaxle.

5. INSTALL TRANSAXLE TO ENGINE
(See page E153 MX–9, S51 MX–8)

COOLANT

CO066–03

INSPECTION

HINT:

Check the coolant level when the engine is cold.

1. CHECK ENGINE COOLANT LEVEL AT RADIATOR RESERVOIR

The engine coolant level should be between the ”LOW” and ”FULL” lines.

If low, check for leaks and add ”Toyota Long Life Coolant” or equivalent up to the ”FULL” line.

2. CHECK ENGINE COOLANT QUALITY

(a) Remove the radiator cap.

CAUTION:

To avoid the danger of being burned, do not remove the radiator cap while the engine and radiator are still hot, as fluid and steam can be blown out under pressure.

(b) There should not be any excessive deposits of rust or scale around the radiator cap or radiator filler hole, and the coolant should be free from oil.

If excessively dirty, replace the coolant.

(c) Reinstall the radiator cap.

CO067–03

REPLACEMENT

1. DRAIN ENGINE COOLANT

(a) Remove the radiator cap.

CAUTION:

To avoid the danger of being burned, do not remove the radiator cap while the engine and radiator are still hot, as fluid and steam can be blown out under pressure.

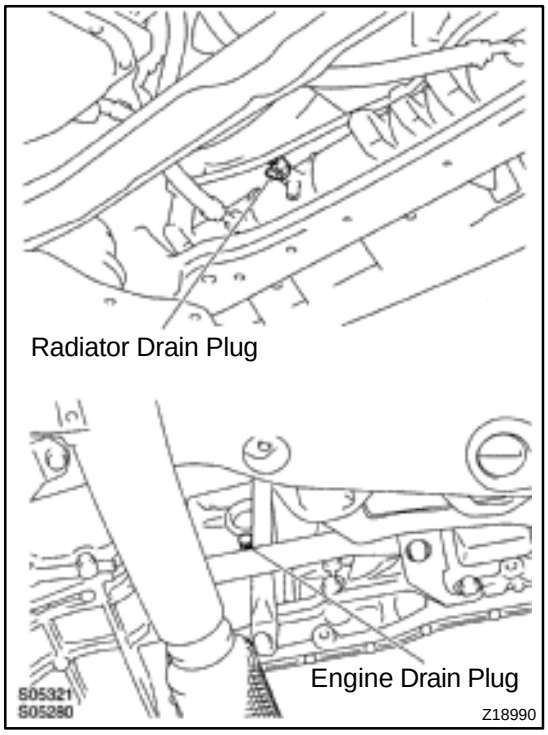

(b) Loosen the radiator drain plug (on the right side of the radiator lower tank) and engine drain plug (on the left rear of the cylinder block), and drain the coolant.

(c) Close the drain plugs.

Torque: 25 N·m (250 kgf·cm, 18 ft·lbf) for engine

2. FILL ENGINE COOLANT

(a) Slowly fill the system with coolant.

- Use of improper coolants may damage engine cooling system.
- Use ”Toyota Long Life Coolant” or equivalent and mix it with plan water according to the manufacturer’s directions.
- Using of coolant which includes more than 50 % (freezing protection down to –35˚C (–31˚F) or 60 % (freezing protection down to –50˚C (–58˚F)) of ethylene–glycol is recommended but not more than 70 %.

NOTICE:

- **Do not use an alcohol type coolant or plain water alone.**
- **The coolant should be mixed with plain water (preferably demineralized water or distilled water).**

Capacity:

w/ Oil cooler	6.9 litters (7.3 US qts, 6.1 Imp. qts)
w/o Oil cooler	6.2 litters (6.5 US qts, 5.4 Imp. qts)

(b) Install the radiator cap.

(c) Start the engine, and bleed the cooling system.

(d) Refill the radiator reservoir with coolant until it reaches the ”FULL” line.

3. CHECK FOR COOLANT LEAKS

WATER PUMP

COMPONENTS

CO068–03

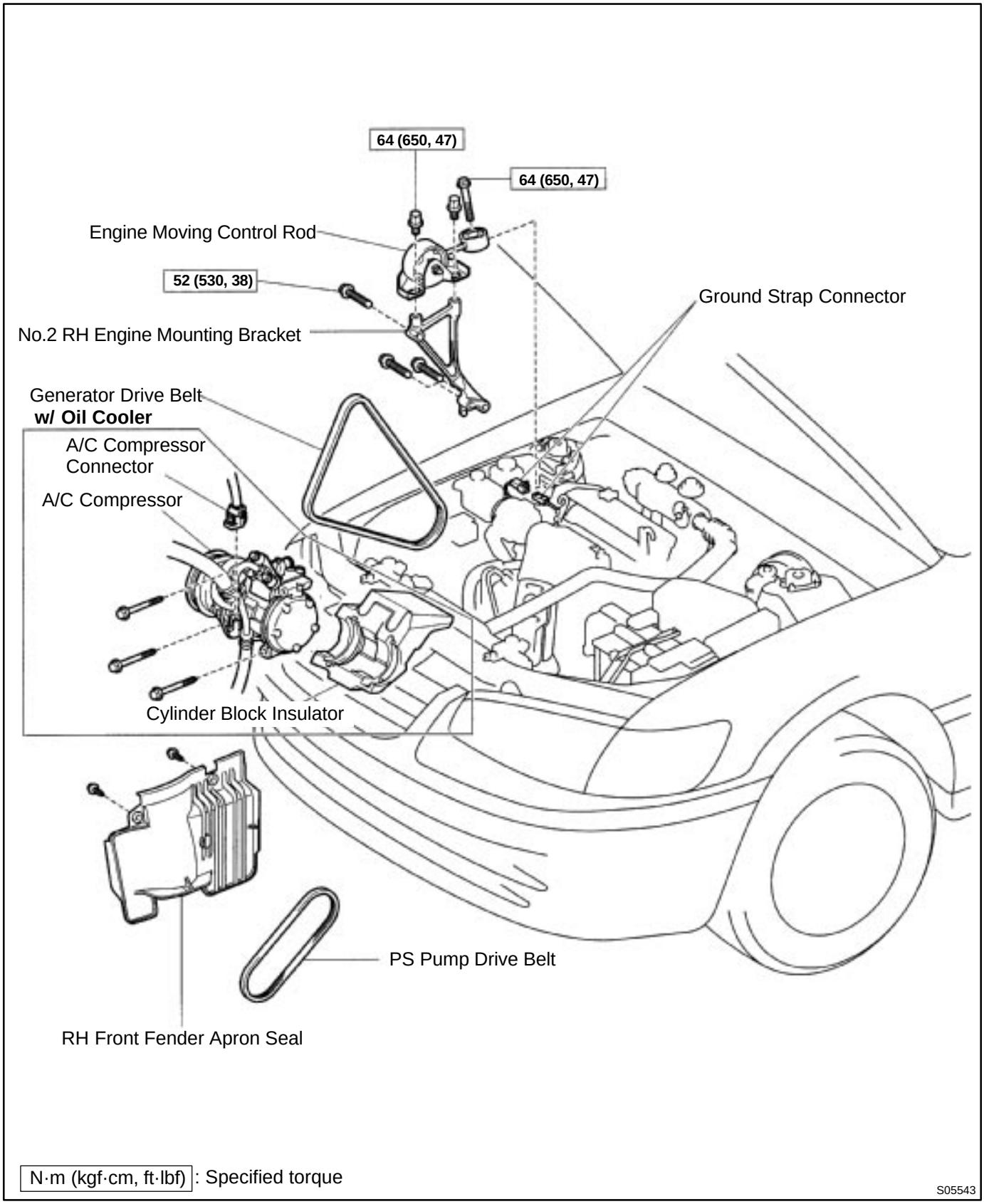

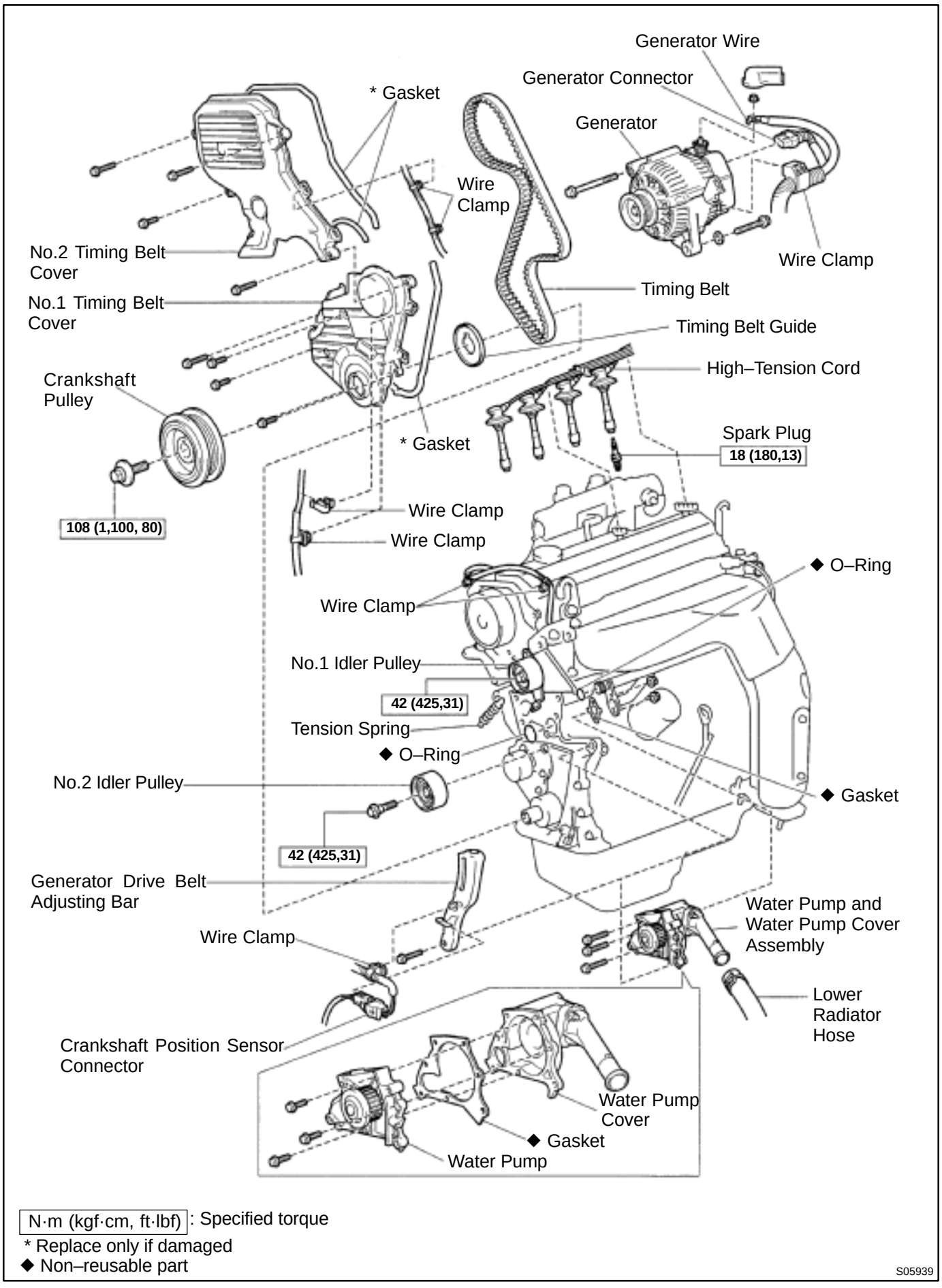

N·m (kgf·cm, ft·lbf): Specified torque

* Replace only if damaged

◆ Non–reusable part

S05939

CO069–04

REMOVAL

1. DRAIN ENGINE COOLANT

2. REMOVE TIMING BELT (See page EM–17)

3. DISCONNECT LOWER RADIATOR HOSE FROM WATER OUTLET

4. REMOVE TIMING BELT TENSION SPRING

Loosen the No.1 idler pulley bolt, and remove the tension spring.

5. REMOVE NO.2 IDLER PULLEY

Remove the bolt and idler pulley.

6. w/ Oil Cooler:
REMOVE A/C COMPRESSOR (See page EM–69)

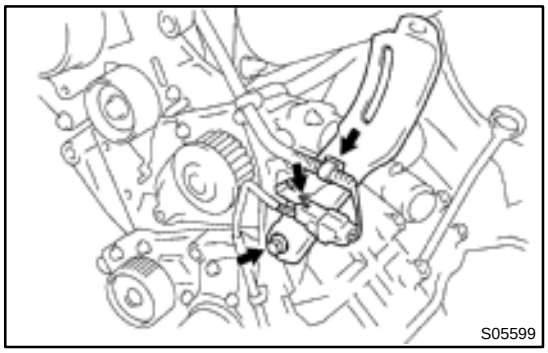

7. REMOVE GENERATOR DRIVE BELT ADJUSTING BAR

(a) Disconnect the engine wire clamp from the adjusting bar.

(b) Disconnect the crankshaft position sensor connector from the bracket on the adjusting bar.

(c) Remove the bolt and adjusting bar.

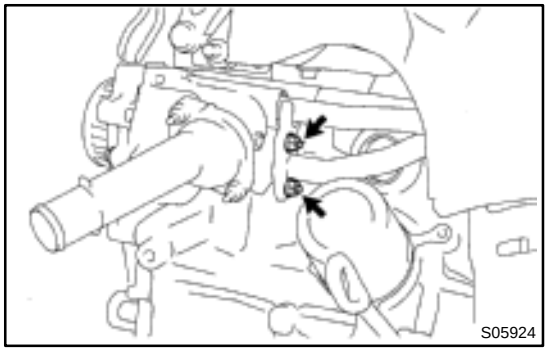

8. REMOVE WATER PUMP AND WATER PUMP COVER ASSEMBLY

(a) Remove the 2 nuts holding the water pump to the water bypass pipe.

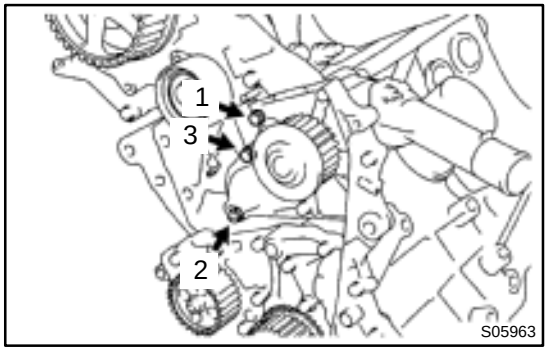

(b) Remove the 3 bolts in the sequence shown.

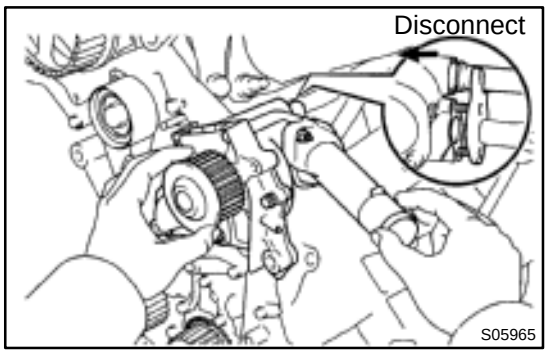

(c) Disconnect the water pump cover from the water bypass pipe, and remove the water pump and water pump cover assembly.

(d) Remove the gasket and 2 O–rings from the water pump and water bypass pipe.

9. REMOVE WATER PUMP FROM WATER PUMP COVER

Remove the 3 bolts, water pump and gasket.

CO06A–03

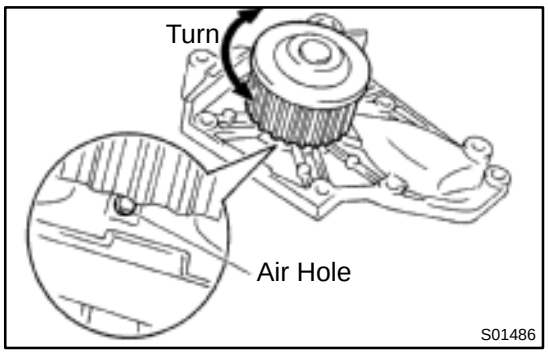

INSPECTION

1. INSPECT WATER PUMP

(a) Visually check the air hole for coolant leakage.

If leakage is found, replace the water pump.

If engine coolant has leaked onto the timing belt, replace the timing belt.

(b) Turn the pulley, and check that the water pump bearing moves smoothly and quietly.

If necessary, replace the water pump.

2. INSPECT TIMING BELT COMPONENTS
(See page EM–22)

CO06B–03

INSTALLATION

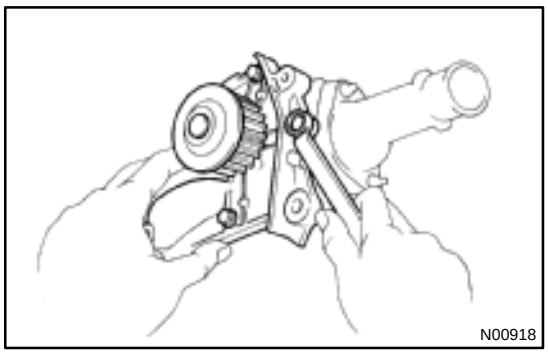

1. INSTALL WATER PUMP TO WATER PUMP COVER

Install a new gasket and the water pump with the 3 bolts.

Torque: 8.8 N·m (90 kgf·cm, 78 in.·lbf)

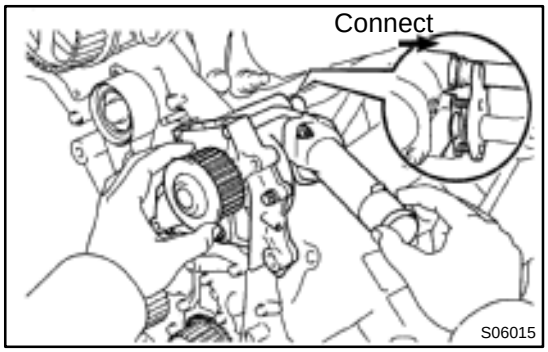

2. INSTALL WATER PUMP AND WATER PUMP COVER ASSEMBLY

(a) Install new O–ring and gasket to water pump cover.

(b) Install a new O–ring to the water bypass pipe.

(c) Apply soapy water to the O–ring on the water bypass pipe.

(d) Connect the water pump cover to the water bypass pipe. Do not install the nuts yet.

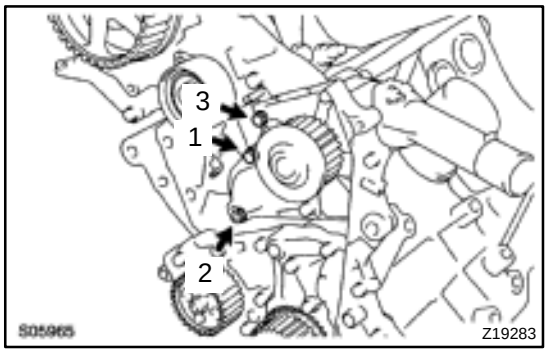

(e) Install the water pump with the 3 bolts. Tighten the bolts in the sequence shown.

Torque: 8.8 N·m (90 kgf·cm, 78 in.·lbf)

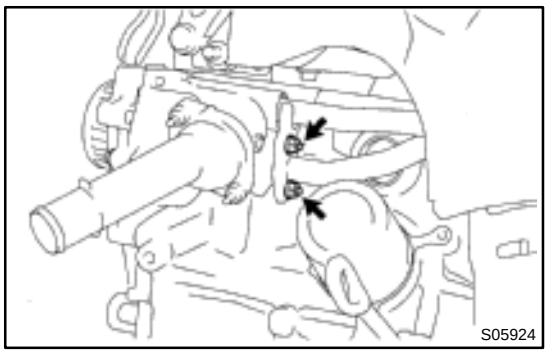

(f) Install the 2 nuts holding the water pump cover to the water bypass pipe.

Torque: 9.3 N·m (95 kgf·cm, 82 in.·lbf)

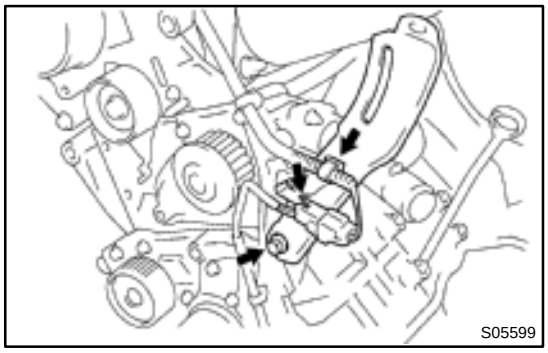

3. INSTALL GENERATOR DRIVE BELT ADJUSTING BAR

(a) Install the adjusting bar with the bolt.

Torque: 22 N·m (224 kgf·cm, 16 ft·lbf)

(b) Install the engine wire clamp to the adjusting bar.

(c) Install the crankshaft position sensor connector to the bracket on the adjusting bar.

4. w/ Oil Cooler:

INSTALL A/C COMPRESSOR (See page EM–75)

5. INSTALL NO.2 IDLER PULLEY (See page EM–23)

6. INSTALL TIMING BELT TENSION SPRING (See page EM–23)
7. CONNECT LOWER RADIATOR HOSE TO WATER INLET
8. INSTALL TIMING BELT (See page EM–23)
9. FILL WITH ENGINE COOLANT
10. START ENGINE AND CHECK FOR COOLANT LEAKS

THERMOSTAT

COMPONENTS

CO06C–03

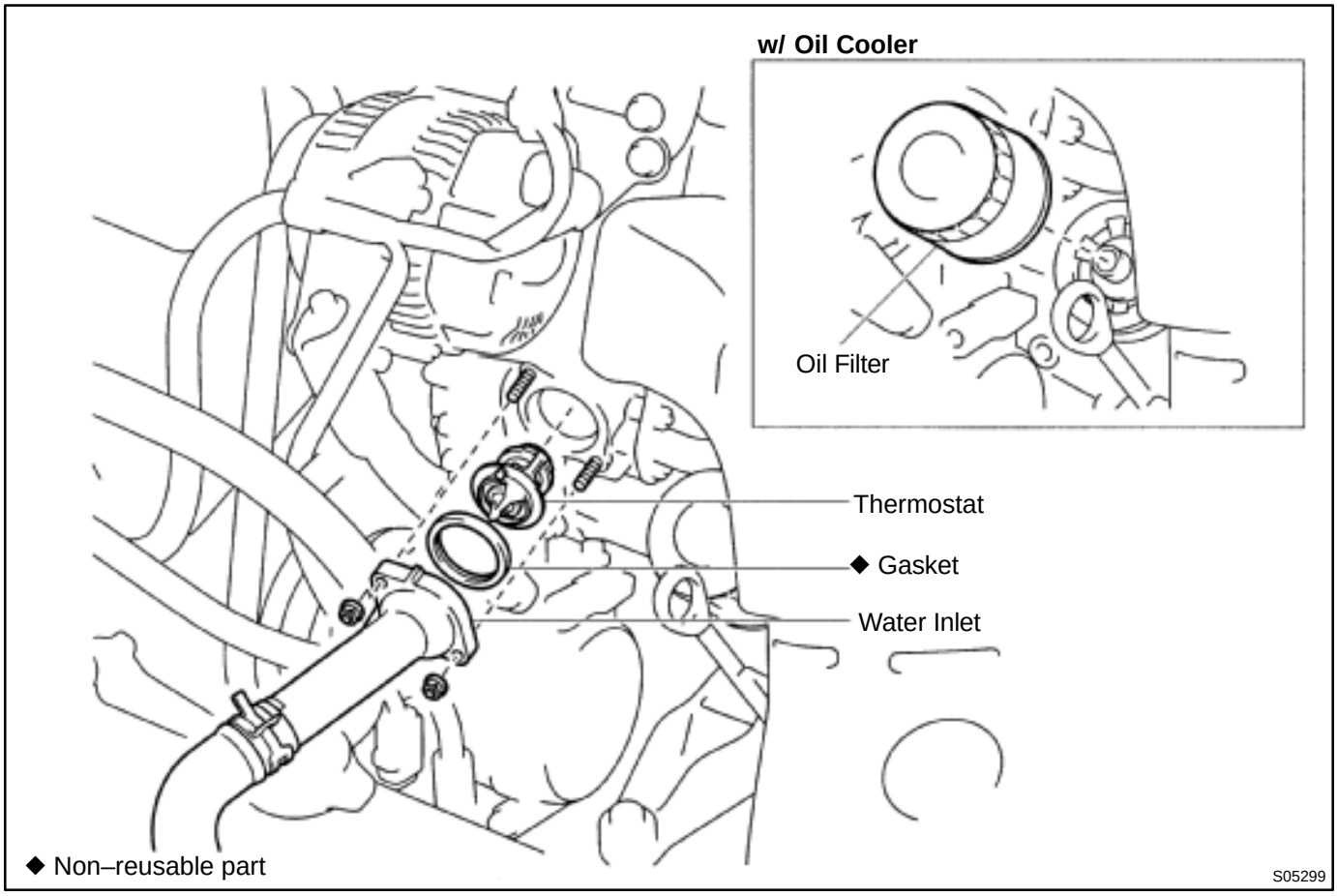

CO06D–03

REMOVAL

HINT:

Removal of the thermostat would have an adverse effect, causing a lowering of cooling efficiency. Do not remove the thermostat, even if the engine tends to overheat.

1. DRAIN ENGINE COOLANT

2. w/ Oil Cooler:
REMOVE OIL FILTER (See page LU–2)

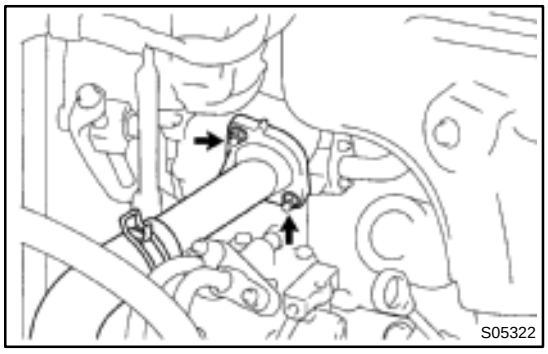

3. REMOVE WATER INLET AND THERMOSTAT

(a) Remove the 2 nuts, and disconnect the water inlet from the water pump cover.

(b) Remove the thermostat.

(c) Remove the gasket from the thermostat.

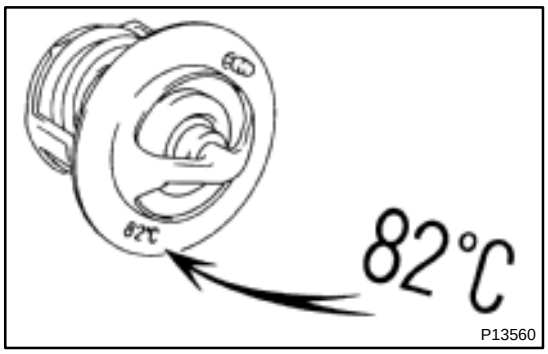

INSPECTION

INSPECT THERMOSTAT

HINT:

The thermostat is numbered with the valve opening temperature. CO06E–03

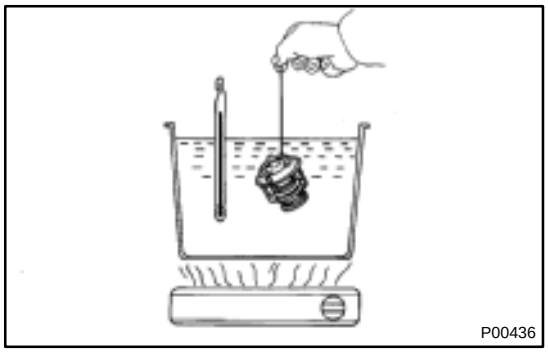

(a) Immerse the thermostat in water and gradually heat the water.

(b) Check the valve opening temperature.

Valve opening temperature: 80 – 84˚C (176 – 183˚F)

If the valve opening temperature is not as specified, replace the thermostat.

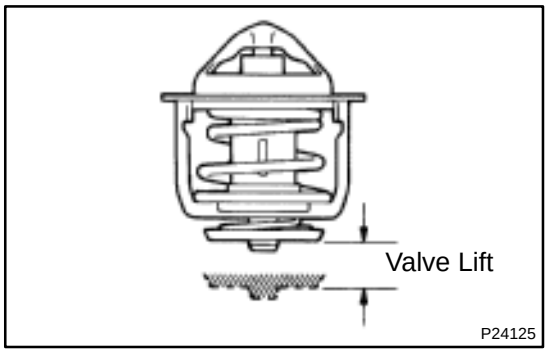

(c) Check the valve lift.

Valve lift: 8 mm (0.31 in.) or more at 95˚C (203˚F)

If the valve lift is not as specified, replace the thermostat.

(d) Check that the valve is fully closed when the thermostat is at low temperatures (below 40˚C (104˚F)).

If not closed, replace the thermostat.

CO0SN–01

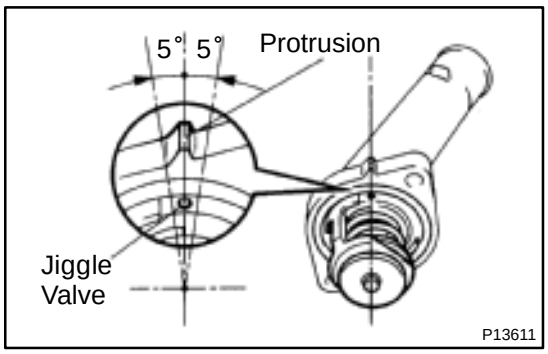

INSTALLATION

1. PLACE THERMOSTAT IN WATER INLET

(a) Install a new gasket to the thermostat.

(b) Align the jiggle valve of the thermostat with the protrusion of the water inlet, and insert the thermostat in the water inlet.

HINT:

The jiggle valve may be set within 5° of either side of the prescribed position.

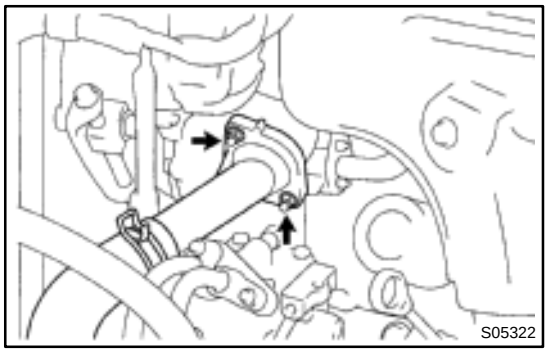

2. INSTALL WATER INLET AND THERMOSTAT

Install the water inlet and thermostat with the 2 nuts.

Torque: 8.8 N·m (90 kgf·cm, 78 in.·lbf)

3. w/ Oil Cooler:

INSTALL OIL FILTER (See page LU–2)

4. FILL WITH ENGINE COOLANT

5. START ENGINE AND CHECK FOR COOLANT LEAKS

6. CHECK ENGINE OIL LEVEL

RADIATOR

CO06G–03

ON–VEHICLE CLEANING

Using water or a steam cleaner, remove any mud or dirt from the radiator core.

NOTICE:

If using a high pressure type cleaner, be careful not to deform the fins of the radiator core. (i.e. Maintain a distance between the cleaner nozzle and radiator core.)

CO06H–04

ON–VEHICLE INSPECTION

1. REMOVE RADIATOR CAP

CAUTION:

To avoid the danger of being burned, do not remove the radiator cap while the engine and radiator are still hot, as fluid and steam can be blown out under pressure.

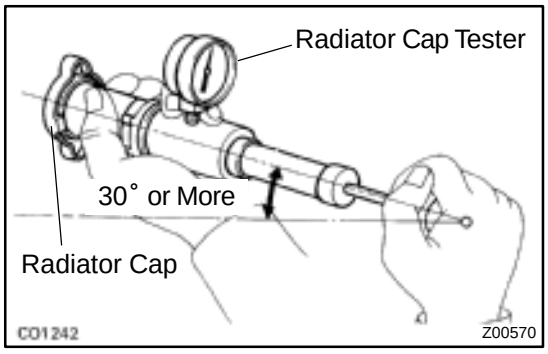

2. INSPECT RADIATOR CAP

NOTICE:

- **If the radiator cap has contaminations, always rinse it with water.**
- **Before using a radiator cap tester, wet the relief valve and pressure valve with engine coolant or water.**
- **When performing steps (a) and (b) below, keep the tester at an angle of over 30˚ above the horizontal.**

(a) Using a radiator cap tester, slowly pump the tester and check that air is coming from the vacuum valve.

Pump speed: 1 push/(3 seconds or more)

NOTICE:

Push the pump at a constant speed.

If air is not coming from the vacuum valve, replace the radiator cap.

(b) Pump the tester, and measure the relief valve opening pressure.

Pump speed: 1 push within 1 second

NOTICE:

This pump speed is for the first pump only (in order to close the vacuum valve). After this, the pump speed can be reduced.

Standard opening pressure:
74 – 103 kPa (0.75 – 1.05 kgf/cm^2, 10.7 – 14.9 psi)
Minimum opening pressure:
59 kPa (0.6 kgf/cm^2, 8.5 psi)

HINT:

Use the tester's maximum reading as the opening pressure.

If the opening pressure is less than minimum, replace the radiator cap.

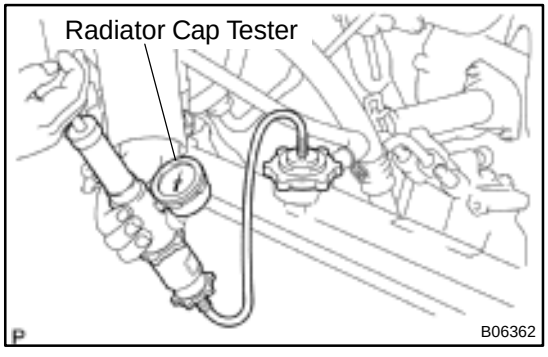

3. INSPECT COOLING SYSTEM FOR LEAKS

(a) Fill the radiator with coolant, and attach a radiator cap tester.

(b) Warm up the engine.

(c) Pump it to 118 kPa (1.2 kgf/cm^2, 17.1 psi), and check that the pressure does not drop.

If the pressure drops, check the hoses, radiator or water pump for leaks. If no external leaks are found, check the heater core, cylinder block and head.

4. REINSTALL RADIATOR CAP

CO06I–03

COMPONENTS

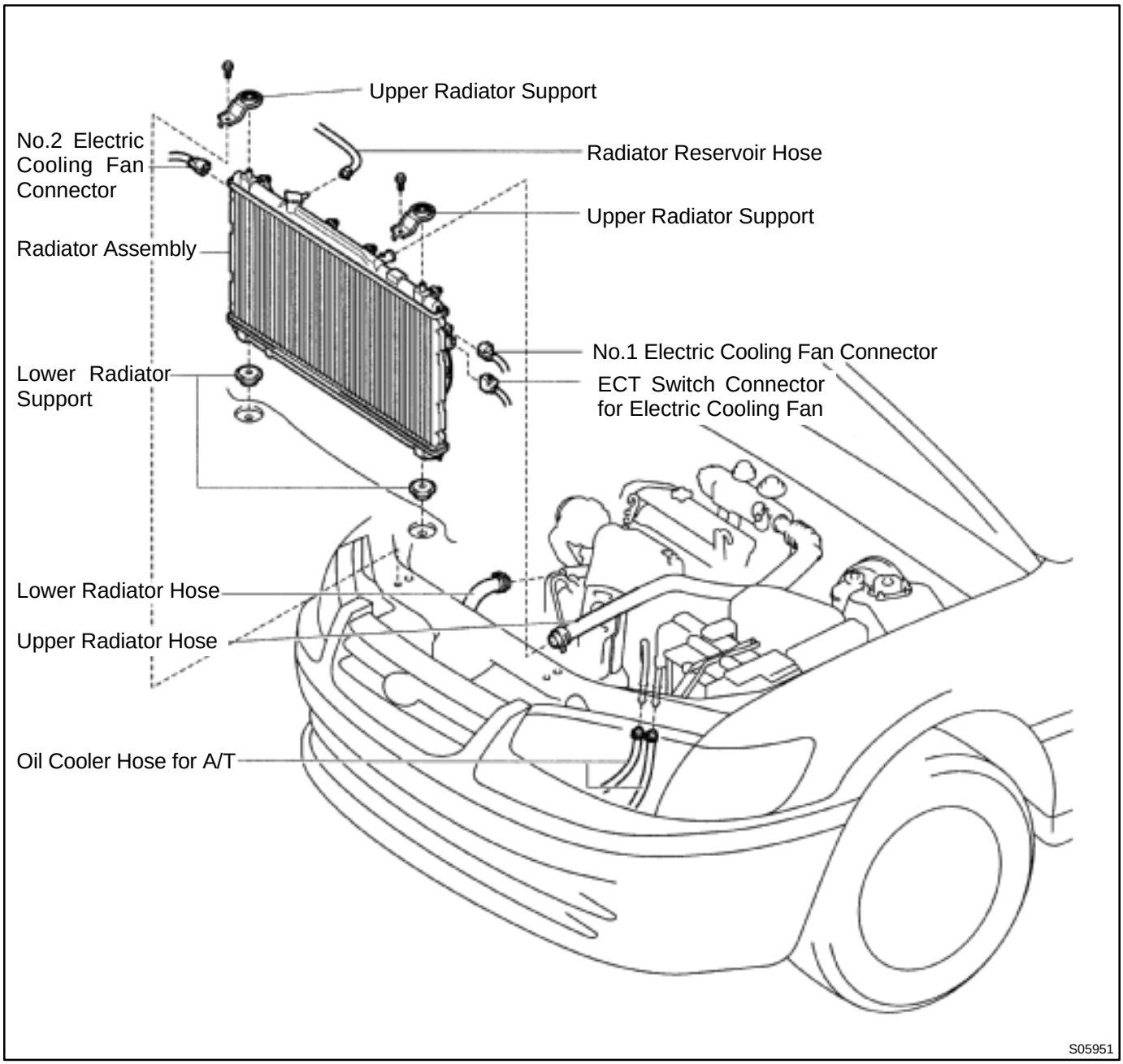

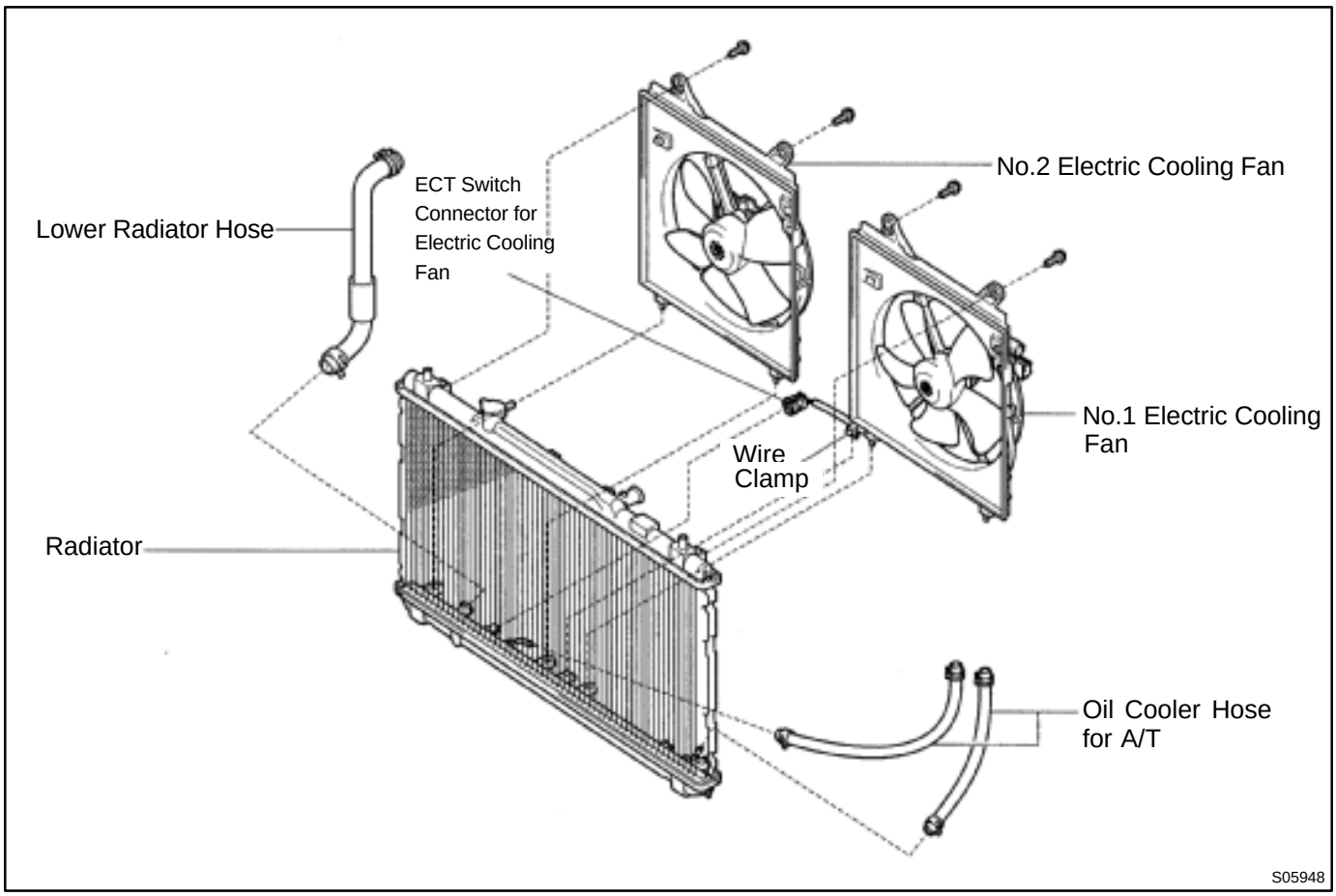
Lower Radiator Hose
ECT Switch Connector for Electric Cooling Fan
No.2 Electric Cooling Fan
No.1 Electric Cooling Fan
Wire Clamp
Radiator
Oil Cooler Hose for A/T
S05948

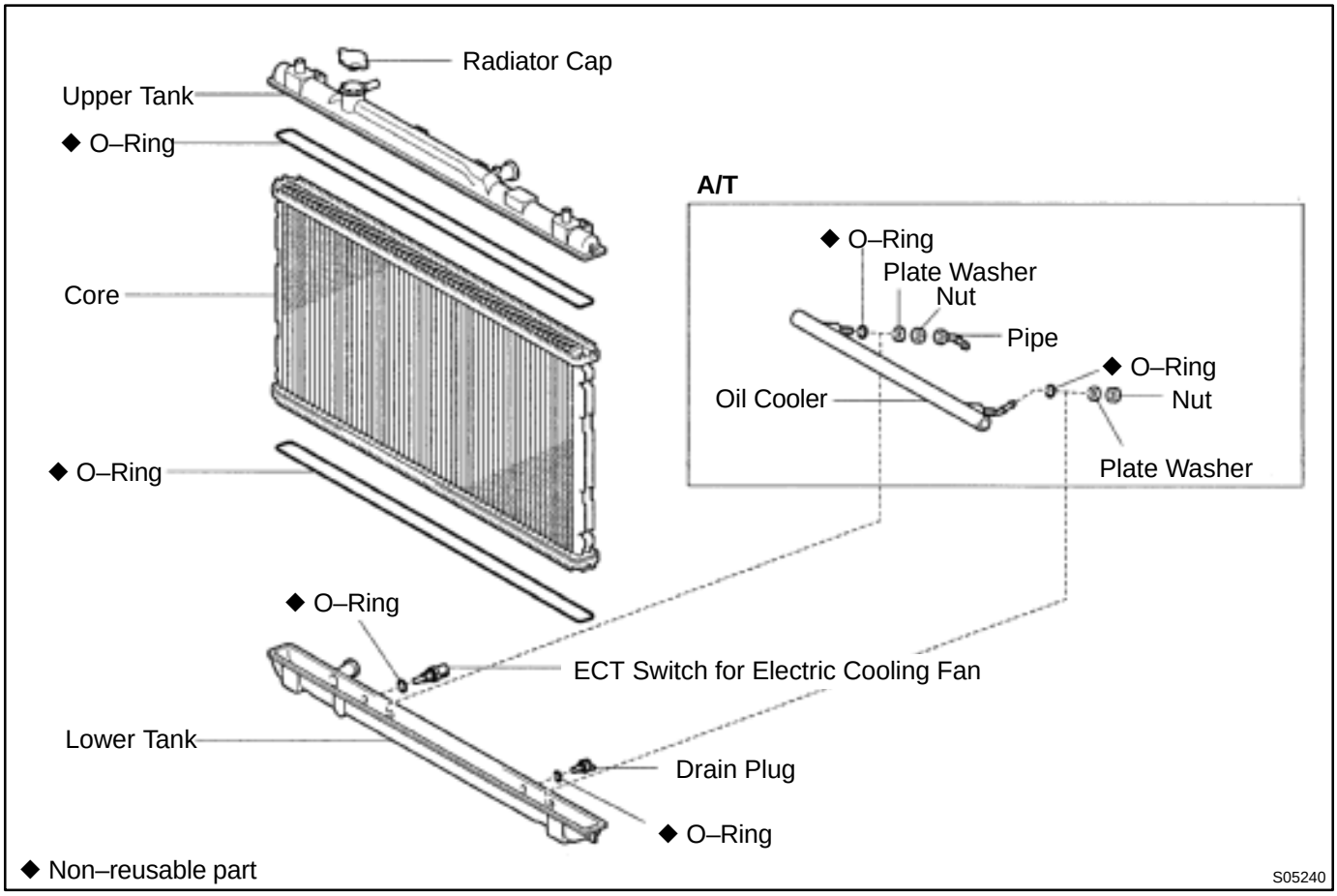
Radiator Cap
Upper Tank
◆ O–Ring
Core
◆ O–Ring
A/T
◆ O–Ring
Plate Washer
Nut
Pipe
◆ O–Ring
Oil Cooler
Nut
Plate Washer
◆ O–Ring
ECT Switch for Electric Cooling Fan
Lower Tank
Drain Plug
◆ O–Ring
◆ Non–reusable part
S05240

CO06J–04

REMOVAL

1. DRAIN ENGINE COOLANT

2. REMOVE RADIATOR ASSEMBLY

(a) Disconnect the No.1 electric cooling fan connector.
(b) Disconnect the No.2 electric cooling fan connector.
(c) Disconnect the ECT switch connector for the electric cooling fan.
(d) Disconnect the upper radiator hose from the radiator.
(e) Disconnect the lower radiator hose from the water inlet.
(f) Disconnect the radiator reservoir hose from the radiator.
(g) A/T:
Disconnect the 2 oil cooler hoses from the oil cooler pipes.

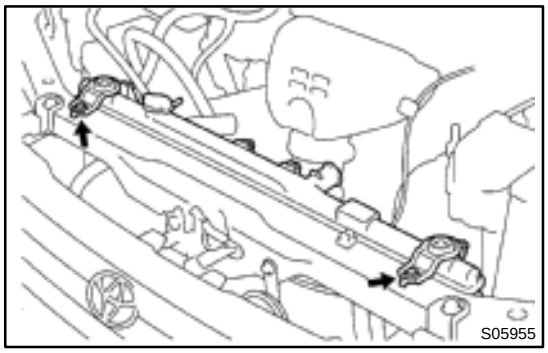
S05955

(h) Remove the 2 bolts and 2 upper radiator supports.
(i) Remove the radiator assembly.
(j) Remove the 2 lower radiator supports.
(k) Remove the lower radiator hose from the radiator.
(l) A/T:
Remove the 2 oil cooler hoses from the radiator.

3. REMOVE NO.1 ELECTRIC COOLING FAN FROM RADIATOR

(a) Disconnect the ECT switch connector for the cooling fan.
(b) Disconnect the ECT switch wire clamp for the cooling fan from the bracket of the radiator.
(c) Remove the 2 bolts and cooling fan.

4. REMOVE NO.2 ELECTRIC COOLING FAN FROM RADIATOR

Remove the 2 bolts and cooling fan.

CO06K–03

DISASSEMBLY

1. REMOVE ECT SWITCH

(a) Remove the ECT switch.

(b) Remove the O–ring.

2. REMOVE DRAIN PLUG

(a) Remove the drain plug.

(b) Remove the O–ring.

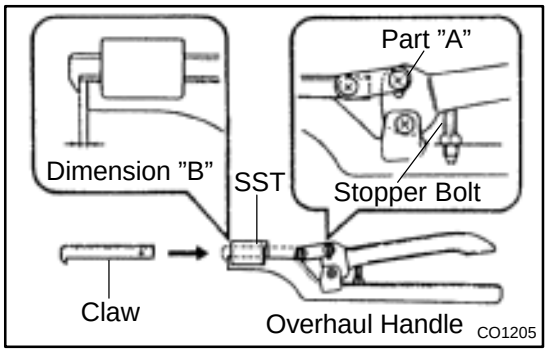

3. ASSEMBLE SST

SST 09230–01010

(a) Install the claw to the overhaul handle, inserting it in the hole in part ”A” as shown in the diagram.

(b) While gripping the handle, adjust the stopper bolt so that dimension ”B” is as shown in the illustration.

Dimension: 0.2 – 0.3 mm (0.008 – 0.012 in)

NOTICE:

If this adjustment is not done the claw may be damaged.

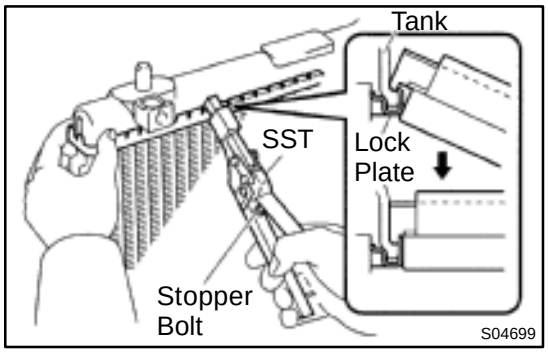

4. UNCAULK LOCK PLATES

Using SST to release the caulking, squeeze the handle until stopped by the stopper bolt.

SST 09230–01010

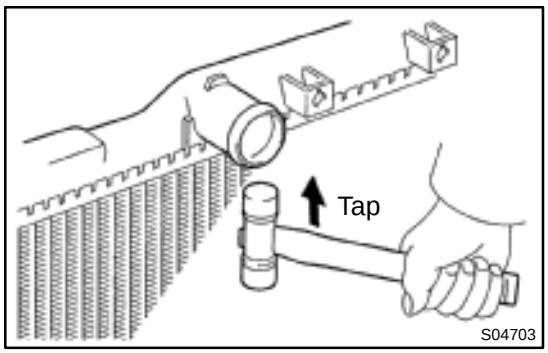

5. REMOVE TANKS AND O–RINGS

Lightly tap the bracket of the radiator (or radiator inlet or outlet) with a soft–faced hammer, and remove the tank and the O–ring.

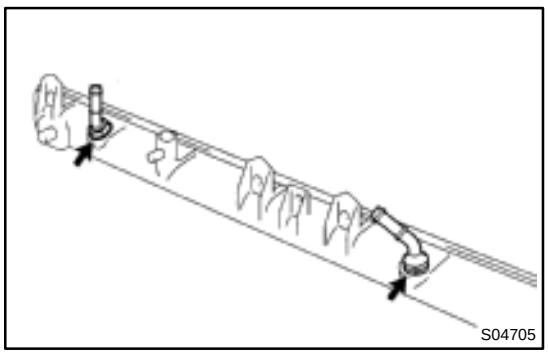

6. A/T:

REMOVE OIL COOLER FROM LOWER TANK

(a) Loosen the nut, and remove the cooler pipe.

(b) Remove the 2 nuts and plate washers.

(c) Remove the oil cooler and 2 O–rings.

CO06L–04

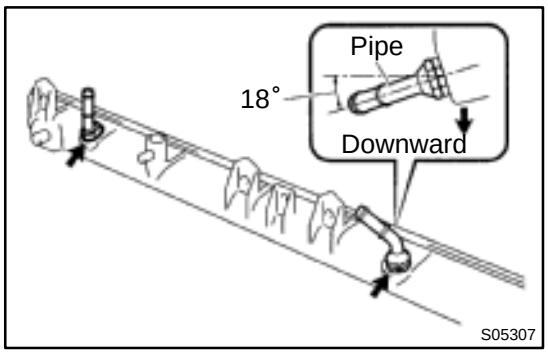

REASSEMBLY

1. A/T:

INSTALL OIL COOLER TO LOWER TANK

(a) Install 2 new O–rings to the oil cooler.

(b) Install the oil cooler to the lower tank with the 2 plate washers and nuts.

Torque: 8.3 N·m (85 kgf·cm, 74 in.·lbf)

(c) Install the cooler pipe in the direction indicated in the illustration.

Torque: 14.7 N·m (150 kgf·cm, 11 ft·lbf)

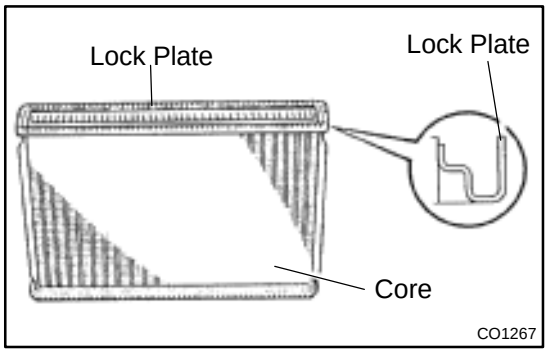

2. INSPECT LOCK PLATE FOR DAMAGE

HINT:

- If the sides of the lock plate groove are deformed, reassembly of the tank will be impossible.
- Therefore, first correct any deformation with pliers or similar object. Water leakage will result if the bottom of the lock plate groove is damaged or dented.

NOTICE:

The radiator can only be recaulked 2 times. After the 2nd time, the radiator core must be replaced.

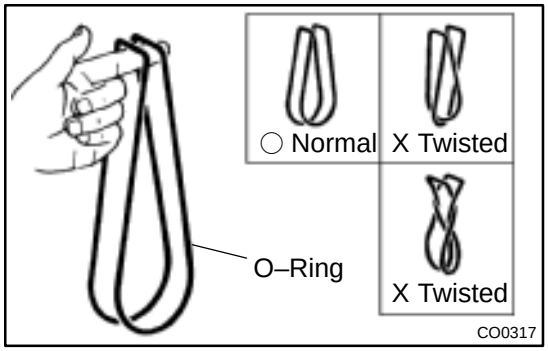

3. INSTALL NEW O–RINGS AND TANKS

(a) After checking that there are no foreign objects in the lock plate groove, install the new O–ring without twisting it.

HINT:

When cleaning the lock plate groove, lightly rub it with sand paper without scratching it.

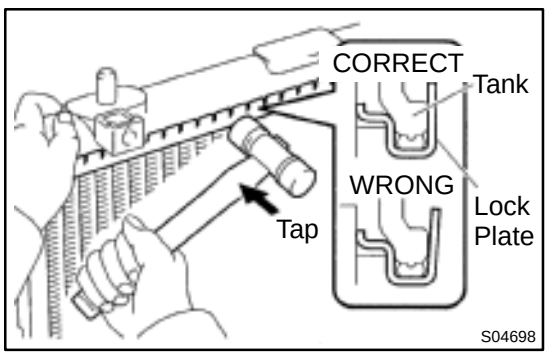

(b) Install the tank without damaging the O–ring.

(c) Tap the lock plate with a soft–faced hammer so that there is no gap between it and the tank.

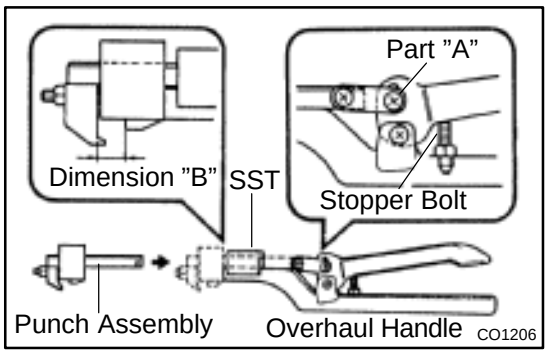

4. ASSEMBLE SST

SST 09230–01010, 09231–14010

(a) Install the punch assembly to the overhaul handle, inserting it in the hole in part ”A” as shown in the illustration.

(b) While gripping the handle, adjust the stopper bolt so that dimension ”B” is as shown in the illustration.

Dimension: 8.4 mm (0.331 in)

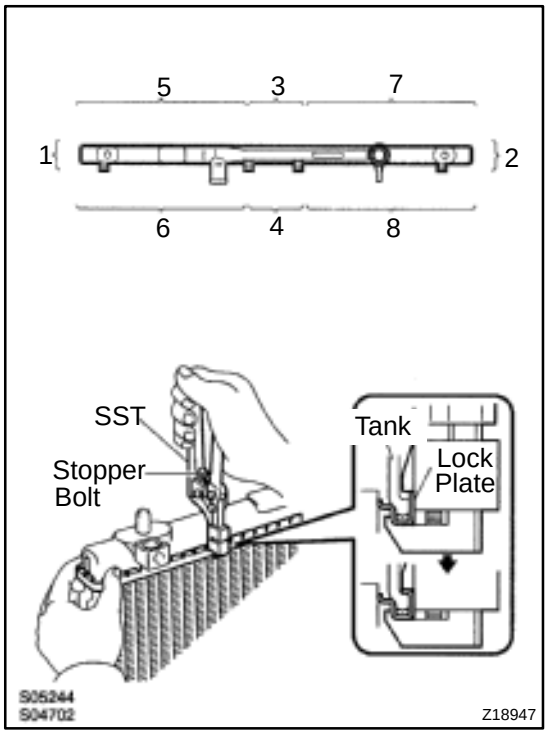

5. CAULK LOCK PLATE

(a) Lightly press SST against the lock plate in the order shown in the illustration. After repeating this a few times, fully caulk the lock plate by squeezing the handle until stopped by the stopper plate.

SST 09230–01010

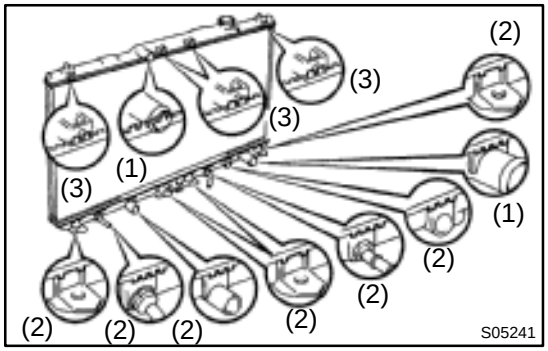

HINT:

- Do not stake the areas protruding around the pipes, brackets or tank ribs.

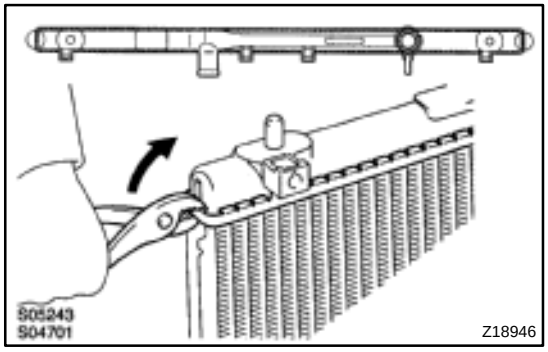

- The points shown in the illustration and oil cooler near here (A/T) cannot be staked with the SST. Use pliers or similar object and be careful not to damage the core plates.

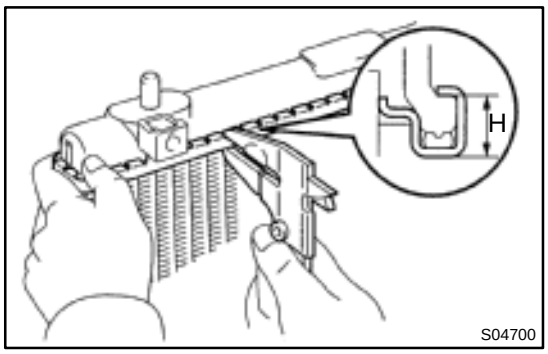

(b) Check the lock plate height (H) after completing the caulking.

Plate height: 7.40 – 7.80 mm (0.2913 – 0.3071 in.)

If not within the specified height, adjust the stopper bolt of the handle again and caulk again.

6. INSTALL ECT SWITCH

(a) Install a new O–ring to the ECT switch.

(b) Install the ECT switch.

7. INSTALL DRAIN PLUG

(a) Install a new O–ring to the drain plug.

(b) Install the drain plug.

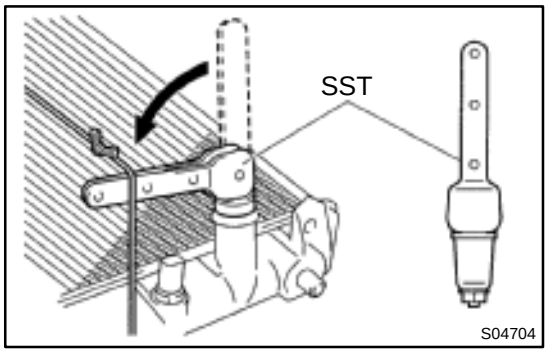

8. INSPECT FOR WATER LEAKS

(a) Plug the inlet and outlet pipes of the radiator with SST.

SST 09230–01010

(b) Using a radiator cap tester, apply pressure to the radiator.

Test pressure: 177 kPa (1.8 kgf/cm^2, 26 psi)

(c) Submerge the radiator in water.

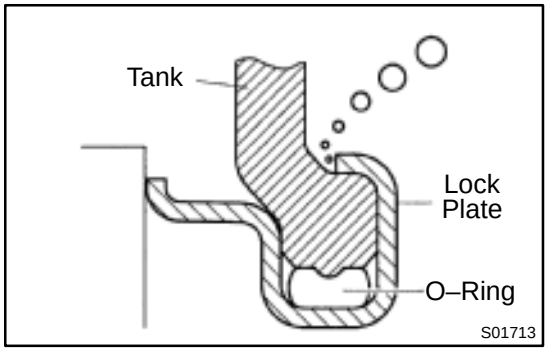

(d) Inspect for leaks.

HINT:

On radiators with resin tanks, there is a clearance between the tank and lock plate where a minute amount of air will remain, giving the appearance of an air leak when the radiator is submerged in water. Therefore, before doing the water leak test, first swish the radiator around in the water until all air bubbles disappear.

CO06M–03

INSTALLATION

1. INSTALL NO.1 ELECTRIC COOLING FAN TO RADIATOR

(a) Attach the lower side of the cooling fan to the bracket of the radiator.
(b) Install the cooling fan with the 2 bolts.
(c) Connect the ECT switch connector for the cooling fan.
(d) Install the ECT switch wire clamp for the cooling fan to the bracket of the radiator.
Torque: 5.0 N·m (50 kgf·cm, 44 in.·lbf)

2. INSTALL NO.2 ELECTRIC COOLING FAN TO RADIATOR

(a) Attach the lower side of the cooling fan to the bracket of the radiator.
(b) Install the cooling fan with the 2 bolts.
Torque: 5.0 N·m (50 kgf·cm, 44 in.·lbf)

3. INSTALL RADIATOR ASSEMBLY

(a) Install the lower radiator hose to the radiator.
(b) A/T:
Install the 2 oil cooler hoses to the radiator.
(c) Install the 2 lower radiator supports to the radiator.
(d) Attach the 2 lower radiator supports on the radiator to the body brackets.

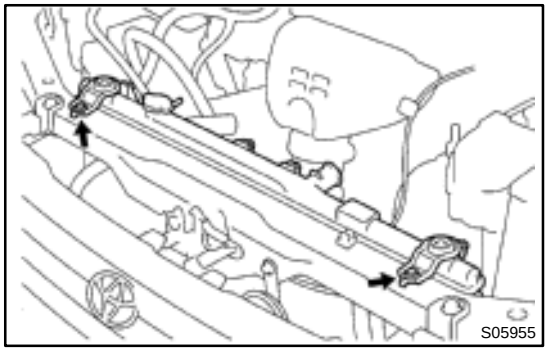

(e) Install the 2 upper radiator supports with the 2 bolts.
Torque: 12.8 N·m (130 kgf·cm, 9 ft·lbf)
(f) Connect the upper radiator hose to the radiator.
(g) Connect the lower radiator hose to the water inlet.
(h) Connect the radiator reservoir hose to the radiator.
(i) A/T:
Connect the 2 oil cooler hoses to the oil cooler pipes.
(j) Connect the No.1 electric cooling fan connector.
(k) Connect the No.2 electric cooling fan connector.
(l) Connect the ECT switch connector for the electric cooling fan.

4. FILL WITH ENGINE COOLANT

5. START ENGINE AND CHECK FOR COOLANT LEAKS

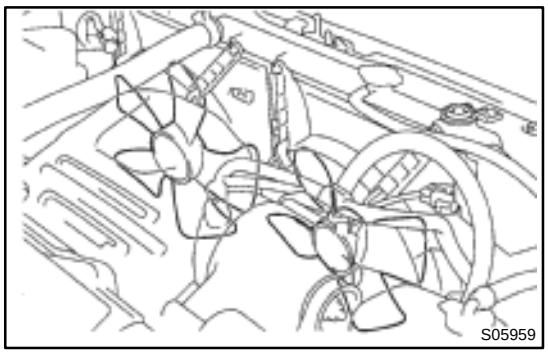

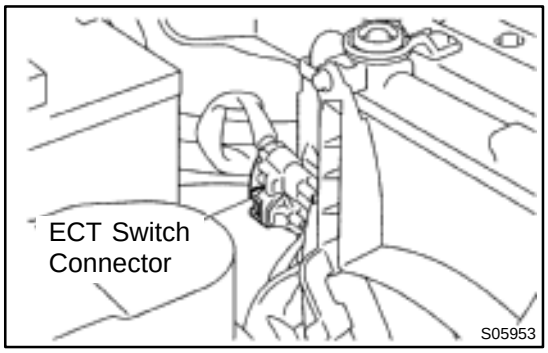

ELECTRIC COOLING FAN

CO06N–03

ON–VEHICLE INSPECTION

1. CHECK COOLING FAN OPERATION WITH LOW TEMPERATURE (Below 83˚C (181˚F))

(a) Turn the ignition switch ON.

(b) Check that the cooling fan stops.

If not, check the cooling fan relay and ECT switch, and check for a separated connector or severed wire between the cooling fan relay and ECT switch.

(c) Disconnect the ECT switch connector.

(d) Check that the cooling fan rotates.

If not, check the fan main relay, cooling fan relay, cooling fan, fuses, and check for short circuit between the cooling fan relay and ECT switch.

(e) Reconnect the ECT switch connector.

2. CHECK COOLING FAN OPERATION WITH HIGH TEMPERATURE (Above 93˚C (199˚F))

(a) Start the engine, and raise coolant temperature to above 93˚C (199˚F).

(b) Check that the cooling fan rotates.

If not, replace the ECT switch.

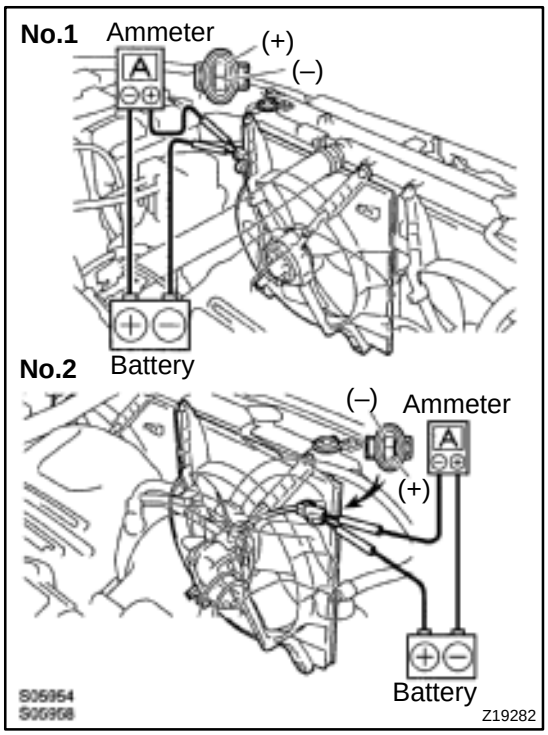

3. INSPECT COOLING FANS

(a) Disconnect the cooling fan connector.

(b) Connect battery and ammeter to the connector.

(c) Check that the cooling fan rotates smoothly, and check the reading on the ammeter.

Standard amperage: 4.9 – 8.5 A

(d) Reconnect the cooling fan connector.

CO06O–03

COMPONENTS

No.1 Cooling Fan

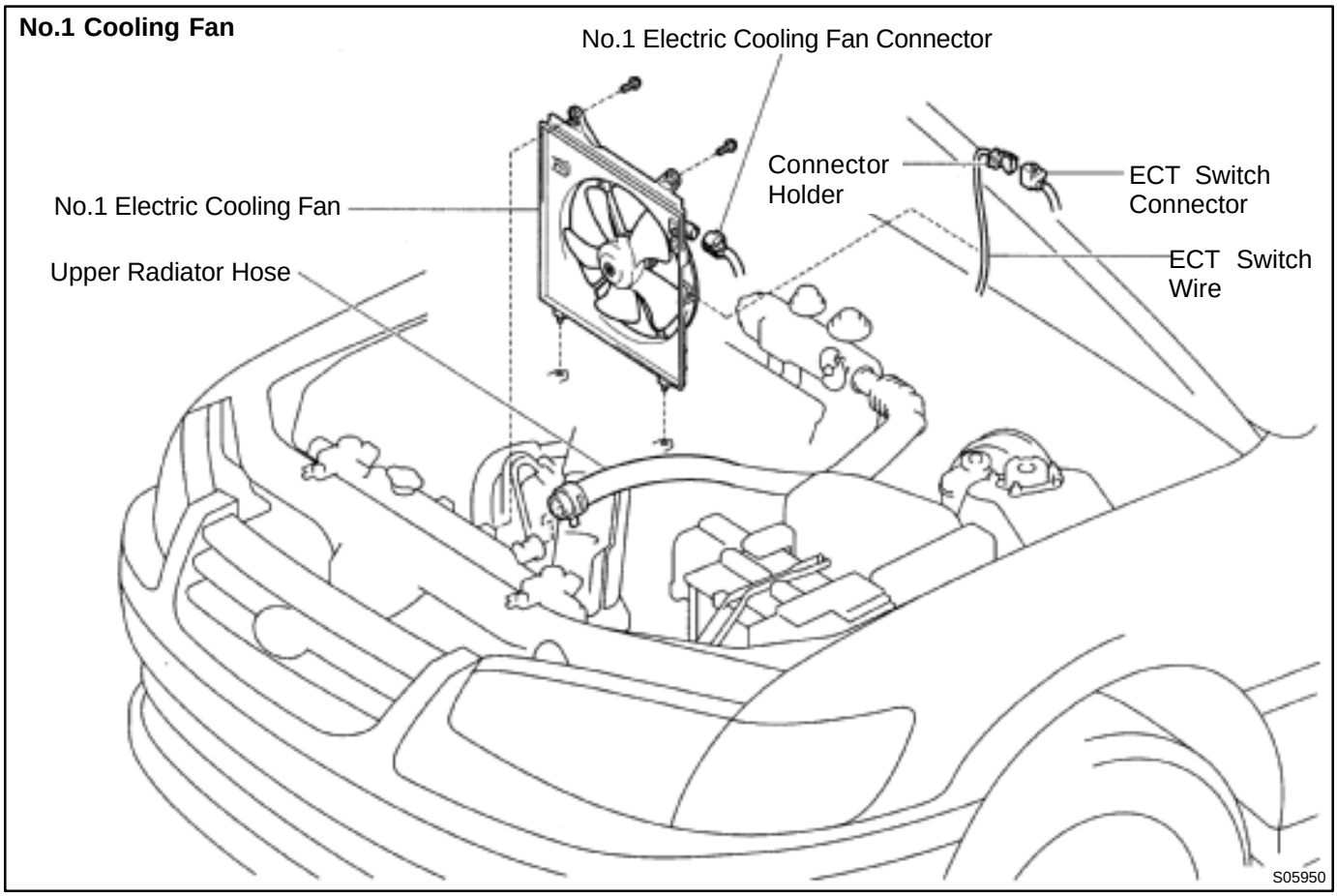

No.1 Cooling Fan

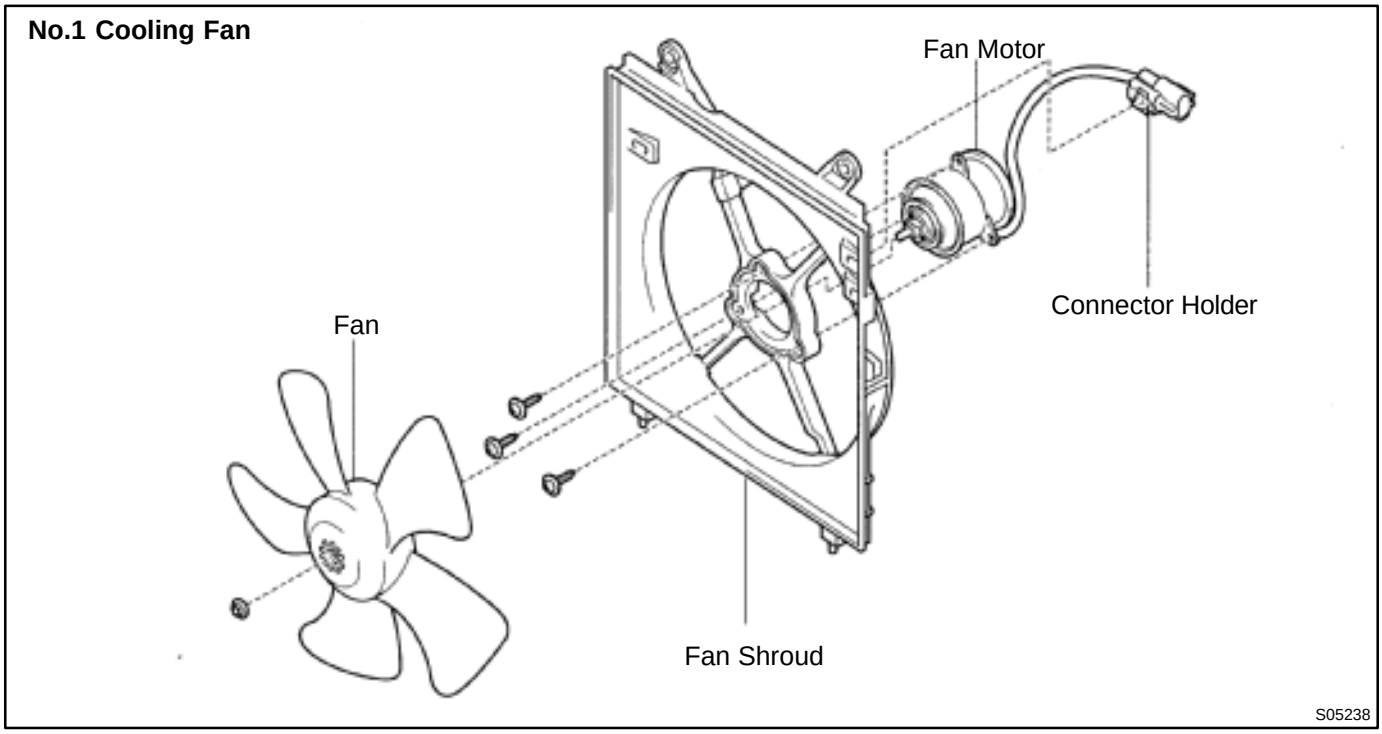

No.2 Cooling Fan

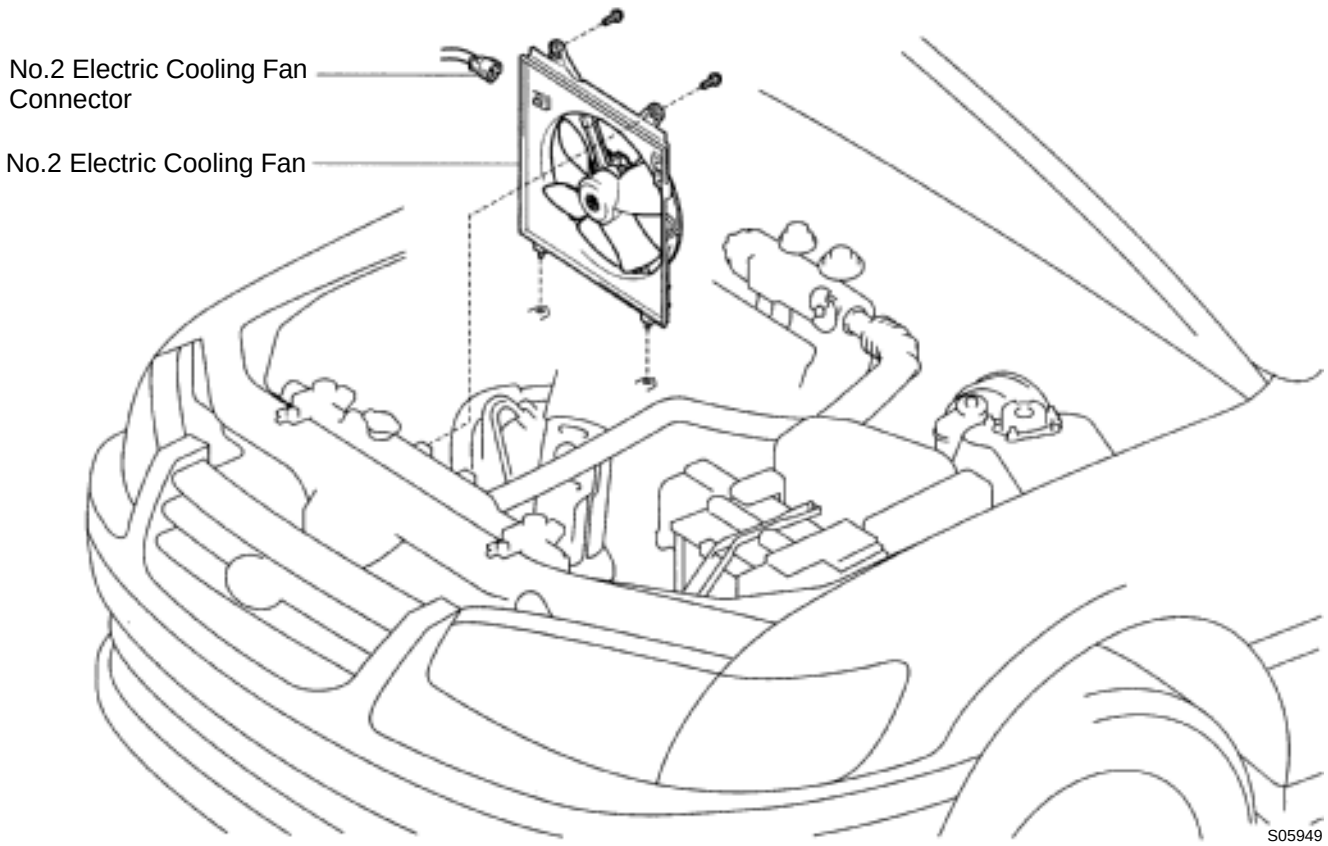

No.2 Cooling Fan

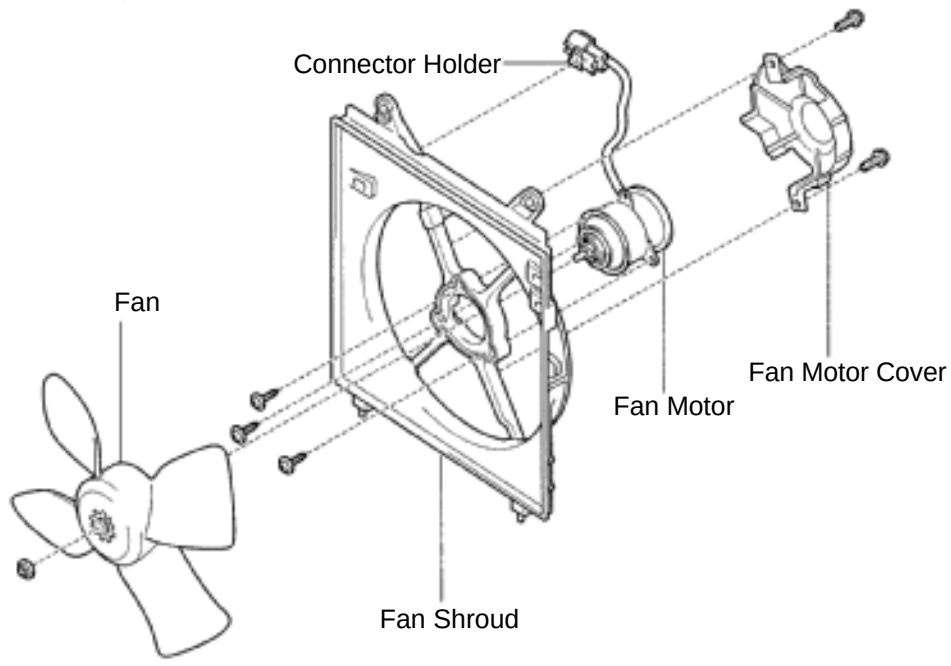

CO06P–03

REMOVAL

1. REMOVE NO.1 COOLING FAN

(a) Drain the engine coolant.

(b) Disconnect the upper radiator hose from the radiator.

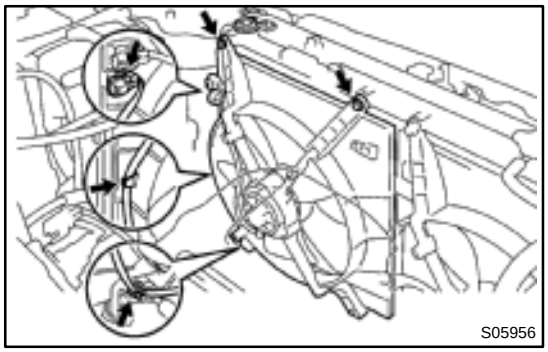

(c) Remove the No.1 cooling fan.
  (1) Disconnect the cooling fan connector.
  (2) Disconnect the ECT switch connector.
  (3) Remove the 2 bolts, and disconnect the cooling fan from the radiator.
  (4) Disconnect the connector holder and wire for the ECT switch from the fan shroud, and remove the cooling fan.

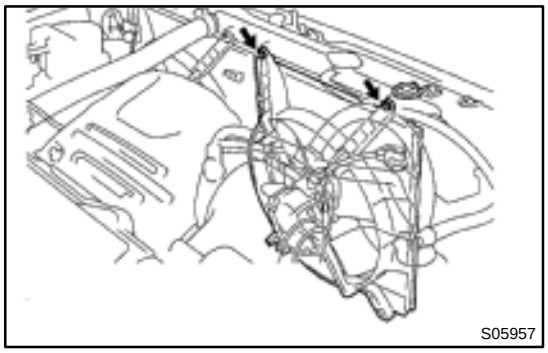

2. REMOVE NO.2 COOLING FAN

(a) Disconnect the cooling fan connector.

(b) Remove the 2 bolts and cooling fan.

CO06Q–03

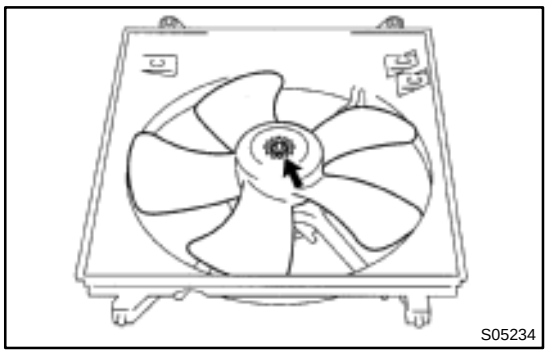

DISASSEMBLY

1. REMOVE FAN

Remove the nut and fan.

2. No.2 Cooling Fan:
REMOVE FAN MOTOR COVER

Remove the 2 screws and motor cover.

3. REMOVE FAN MOTOR

(a) Disconnect the wire and connector holder from the fan shroud.

(b) Remove the 3 screws and fan motor.

CO06R–04

No.1 Cooling Fan

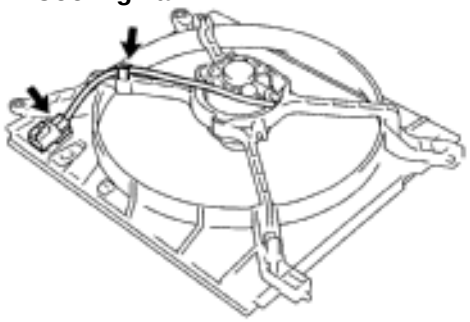

No.2 Cooling Fan

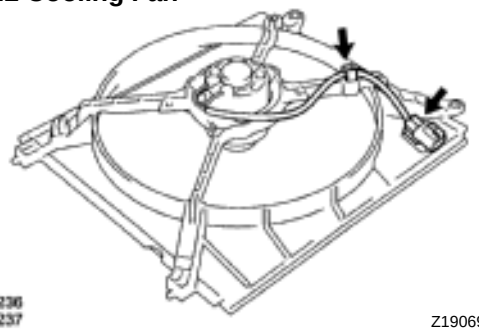

S05236
S05237
Z19069

REASSEMBLY

1. INSTALL FAN MOTOR

(a) Install the fan motor with the 3 screws.

(b) Install the wire and connector holder to the fan shroud.

2. No.2 Cooling Fan:
INSTALL FAN MOTOR COVER

Install the motor cover with the 2 screws.

3. INSTALL FAN

Install the fan with the nut.

CO06S–03

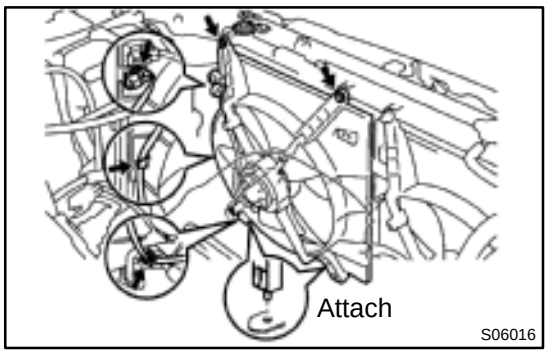

INSTALLATION

1. INSTALL NO.1 COOLING FAN

(a) Install the No.1 cooling fan.
  (1) Attach the lower side of the cooling fan to the bracket of the radiator.
  (2) Install the cooling fan with the 2 bolts.
  Torque: 5.0 N·m (50 kgf·cm, 44 in.·lbf)
  (3) Install the wire and connector holder for the ECT switch to the fan shroud.
  (4) Connect the cooling fan connector.
  (5) Connect the ECT switch connector.
(b) Connect the upper radiator hose to the radiator
(c) Fill with engine coolant
(d) Start the engine and check for coolant leaks

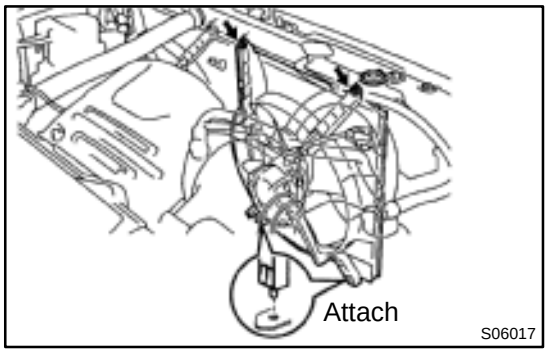

2. INSTALL NO.2 COOLING FAN

(a) Attach the lower side of the cooling fan to the bracket of the radiator.
(b) Install the cooling fan with the 2 bolts.
  Torque: 5.0 N·m (50 kgf·cm, 44 in.·lbf)
(c) Connect the cooling fan connector.

ENGINE COOLANT TEMPERATURE (ECT) SWITCH

CO06T–03

INSPECTION

1. DRAIN ENGINE COOLANT

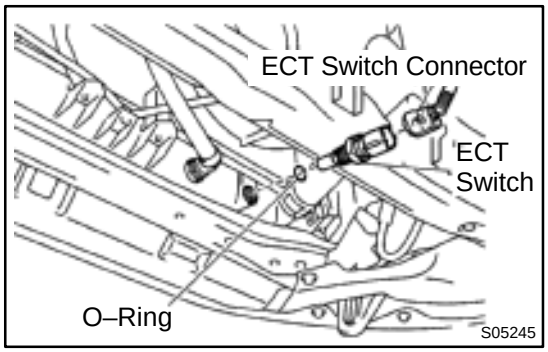

2. REMOVE ECT SWITCH

(a) Disconnect the connector.
(b) Remove the ECT switch.
(c) Remove the O–ring from the ECT switch.

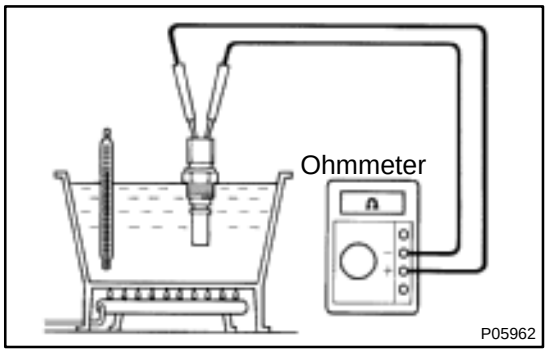

3. INSPECT ECT SWITCH

(a) Using an ohmmeter, check that there is no continuity between the terminals when the coolant temperature is above 93˚C (199˚F).

If there is continuity, replace the switch.

(b) Using an ohmmeter, check that there is continuity between the terminals when the coolant temperature is below 83˚C (181˚F).

If there is no continuity, replace the switch.

4. REINSTALL ECT SWITCH

(a) Install a new O–ring to the ECT switch.
(b) Install the ECT switch.
(c) Connect the connector.

5. REFILL WITH ENGINE COOLANT

6. START ENGINE AND CHECK FOR COOLANT LEAKS

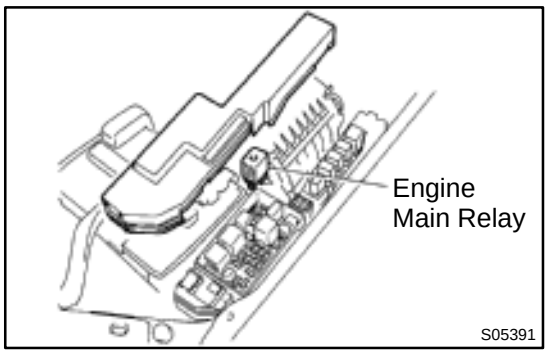

ENGINE MAIN RELAY

CO06U–03

INSPECTION

1. REMOVE RELAY BOX COVER

2. REMOVE ENGINE MAIN RELAY (Marking: ENGINE MAIN)

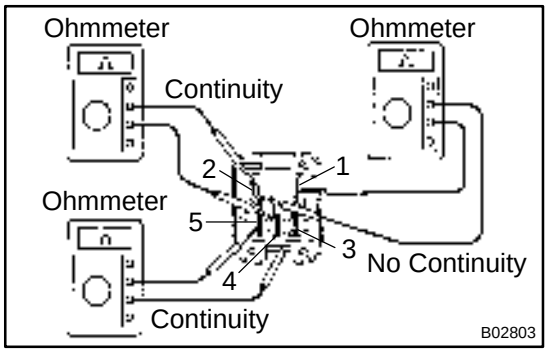

3. INSPECT ENGINE MAIN RELAY

(a) Inspect the relay continuity.

(1) Using an ohmmeter, check that there is continuity between terminals 3 and 5.

If there is no continuity, replace the relay.

(2) Check that there is continuity between terminals 2 and 4.

If there is no continuity, replace the relay.

(3) Check that there is no continuity between terminals 1 and 2.

If there is continuity, replace the relay.

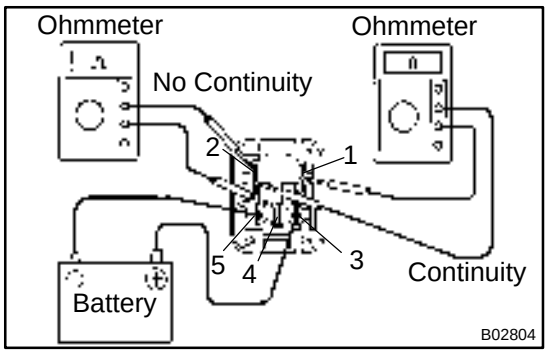

(b) Inspect the relay operation.

(1) Apply battery positive voltage across terminals 3 and 5.

(2) Using an ohmmeter, check that there is no continuity between terminals 2 and 4.

If there is continuity, replace the relay.

(3) Check that there is continuity between terminals 1 and 2.

If there is no continuity, replace the relay.

4. REINSTALL ENGINE MAIN RELAY

5. REINSTALL RELAY BOX COVER

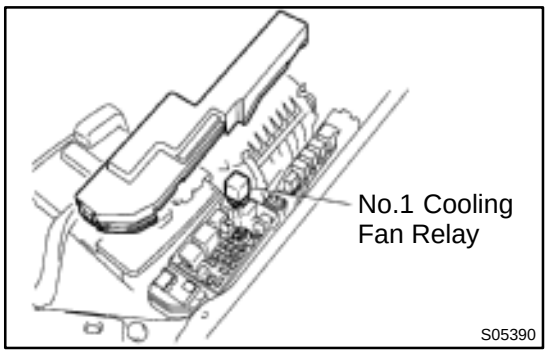

COOLING FAN RELAY

CO06V–03

INSPECTION

1. INSPECT NO.1 COOLING FAN RELAY

(a) Remove the relay box cover.

(b) Remove the No.1 cooling fan relay. (Marking: FAN NO.1)

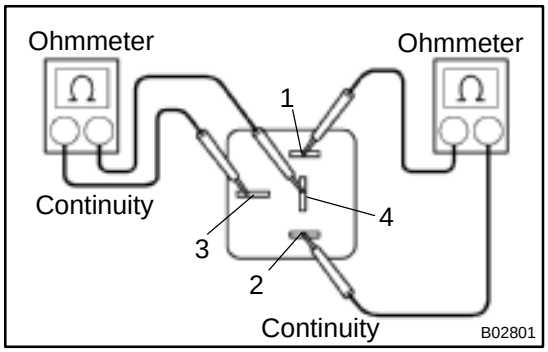

(c) Inspect the No.1 cooling fan relay continuity.

(1) Using an ohmmeter, check that there is continuity between terminals 1 and 2.

If there is no continuity, replace the relay.

(2) Check that there is continuity between terminals 3 and 4.

If there is no continuity, replace the relay.

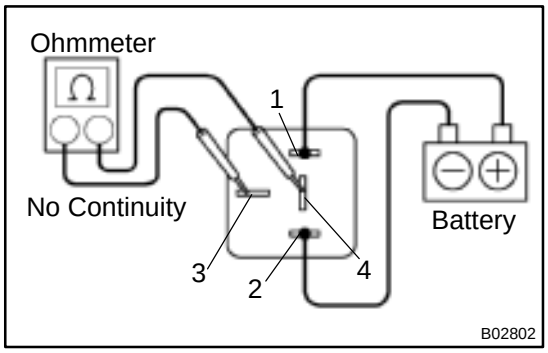

(d) Inspect the No.1 cooling fan relay operation.

(1) Apply battery positive voltage across terminals 1 and 2.

(2) Using an ohmmeter, check that there is no continuity between terminals 3 and 4.

If there is continuity, replace the relay.

(e) Reinstall the No.1 cooling fan relay

(f) Reinstall the relay box cover.

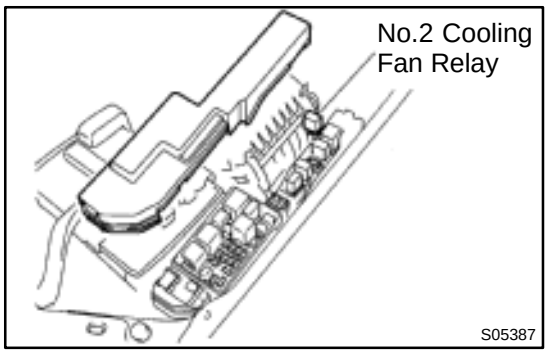

2. INSPECT NO.2 COOLING FAN RELAY

(a) Remove the relay box cover.

(b) Remove the No.2 cooling fan relay. (Marking: FAN NO.2)

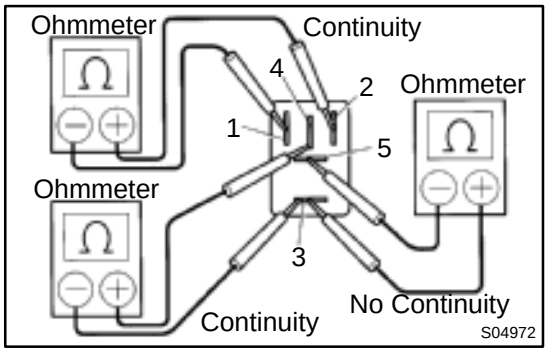

(c) Inspect the No.2 cooling fan relay continuity.

(1) Using an ohmmeter, check that there is continuity between terminals 1 and 2.

If there is no continuity, replace the relay.

(2) Check that there is continuity between terminals 3 and 4.

If there is no continuity, replace the relay.

(3) Check that there is no continuity between terminals 3 and 5.

If there is continuity, replace the relay.

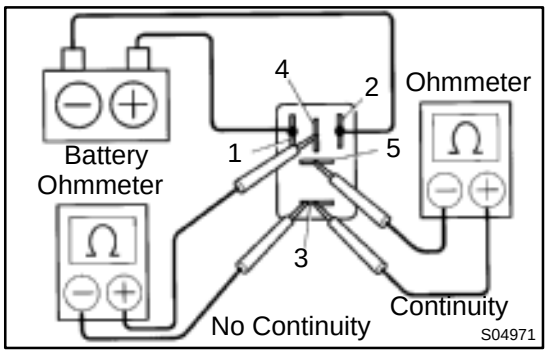

(d) Inspect the No.2 cooling fan relay operation.
  (1) Apply battery positive voltage across terminals 1 and 2.
  (2) Using an ohmmeter, check that there is no continuity between terminals 3 and 4

If there is continuity, replace the relay.
  (3) Check that there is continuity between terminals 3 and 5.

If there is no continuity, replace the relay.
(e) Reinstall the No.2 cooling fan relay.
(f) Reinstall the relay box cover.

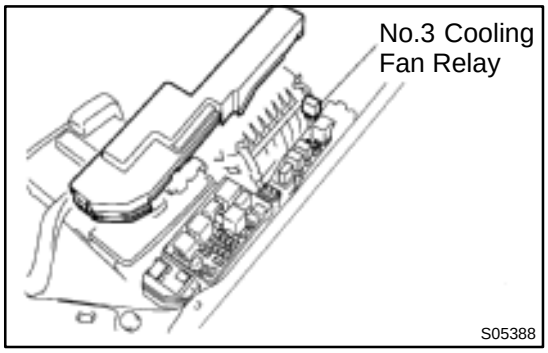

3. INSPECT NO.3 COOLING FAN RELAY

(a) Remove the relay box cover.
(b) Remove the No.3 cooling fan relay. (Marking: FAN NO.3)

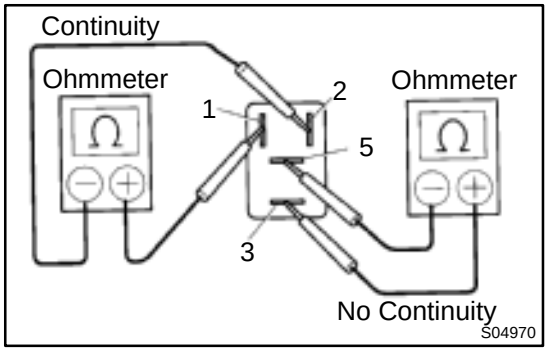

(c) Inspect the No.3 cooling fan relay continuity.
  (1) Using an ohmmeter, check that there is continuity between terminals 1 and 2.

If there is no continuity, replace the relay.
  (2) Check that there is no continuity between terminals 3 and 5.

If there is continuity, replace the relay.

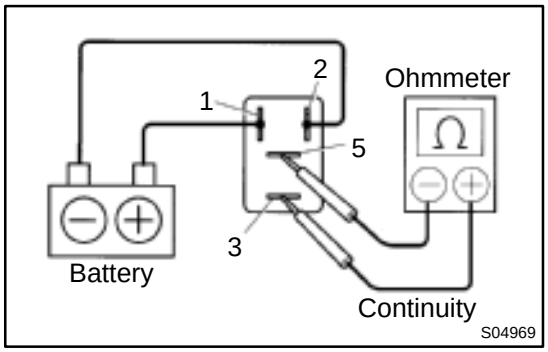

(d) Inspect the No.3 cooling fan relay operation.
  (1) Apply battery positive voltage across terminals 1 and 2.
  (2) Using an ohmmeter, check that there is continuity between terminals 3 and 5.

If there is no continuity, replace the relay.
(e) Reinstall the No.3 cooling fan relay.
(f) Reinstall the relay box cover.

COOLANT

CO03B–04

INSPECTION

1. CHECK ENGINE COOLANT LEVEL AT RADIATOR RESERVOIR

The engine coolant level should be between the ”LOW” and ”FULL” lines, when the engine is cold.

If low, check for leaks and add ”Toyota Long Life Coolant” or Equivalent up to the ”FULL” line.

2. CHECK ENGINE COOLANT QUALITY

(a) Remove the radiator cap from the water outlet.

CAUTION:

To avoid the danger of being burned, do not remove the radiator cap while the engine and radiator are still hot, as fluid and steam can be blown out under pressure.

(b) There should not be any excessive deposits of rust or scale around the radiator cap or water outlet filler hole, and the coolant should be free from oil.

If excessively dirty, clean the coolant passages and replace the coolant.

(c) Reinstall the radiator cap.

CO03C–04

REPLACEMENT

1. DRAIN ENGINE COOLANT

(a) Remove the radiator cap from the water outlet.

CAUTION:

To avoid the danger of being burned, do not remove the radiator cap while the engine and radiator are still hot, as fluid and steam can be blown out under pressure.

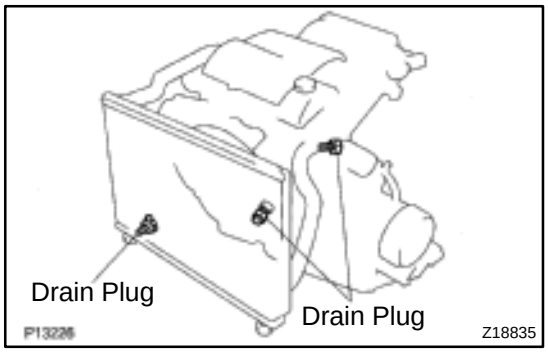

(b) Loosen the radiator drain plug and engine drain plugs, and drain the coolant.

(c) Close the drain plugs.

Torque:
RH engine drain plug on EGR cooler:
7 N·m (70 kgf·cm, 61 in.·lbf)
LH engine drain plug on union:
13 N·m (130 kgf·cm, 9 ft·lbf)

2. FILL ENGINE COOLANT

(a) Slowly fill the system with coolant.

- Use of improper coolants may damage engine cooling system.
- Use ”Toyota Long life Coolant” or equivalent and mix it with plan water according to the manufacturer’s directions.
- Using of coolant which includes more than 50 % (freezing protection down to –35˚C (–31˚F) or 60 % (freezing protection down to –50˚C (–58˚F)) of ethylene–glycol is recommended but not more than 70 %.

NOTICE:

- **Do not use an alcohol type coolant or plain water alone.**
- **The coolant should be mixed with plain water (preferably demineralized water or distilled water).**
  Capacity: 9.2 liters (9.7 US qts, 8.1 lmp. qts)

(b) Install the radiator cap.

(c) Start the engine, and bleed the cooling system.

(d) If necessary, refill coolant into the reservoir up to the ”FULL” line.

3. CHECK ENGINE COOLANT FOR LEAKS

4. CHECK ENGINE COOLANT SPECIFIC GRAVITY CORRECTLY

WATER PUMP

COMPONENTS

CO03D–04

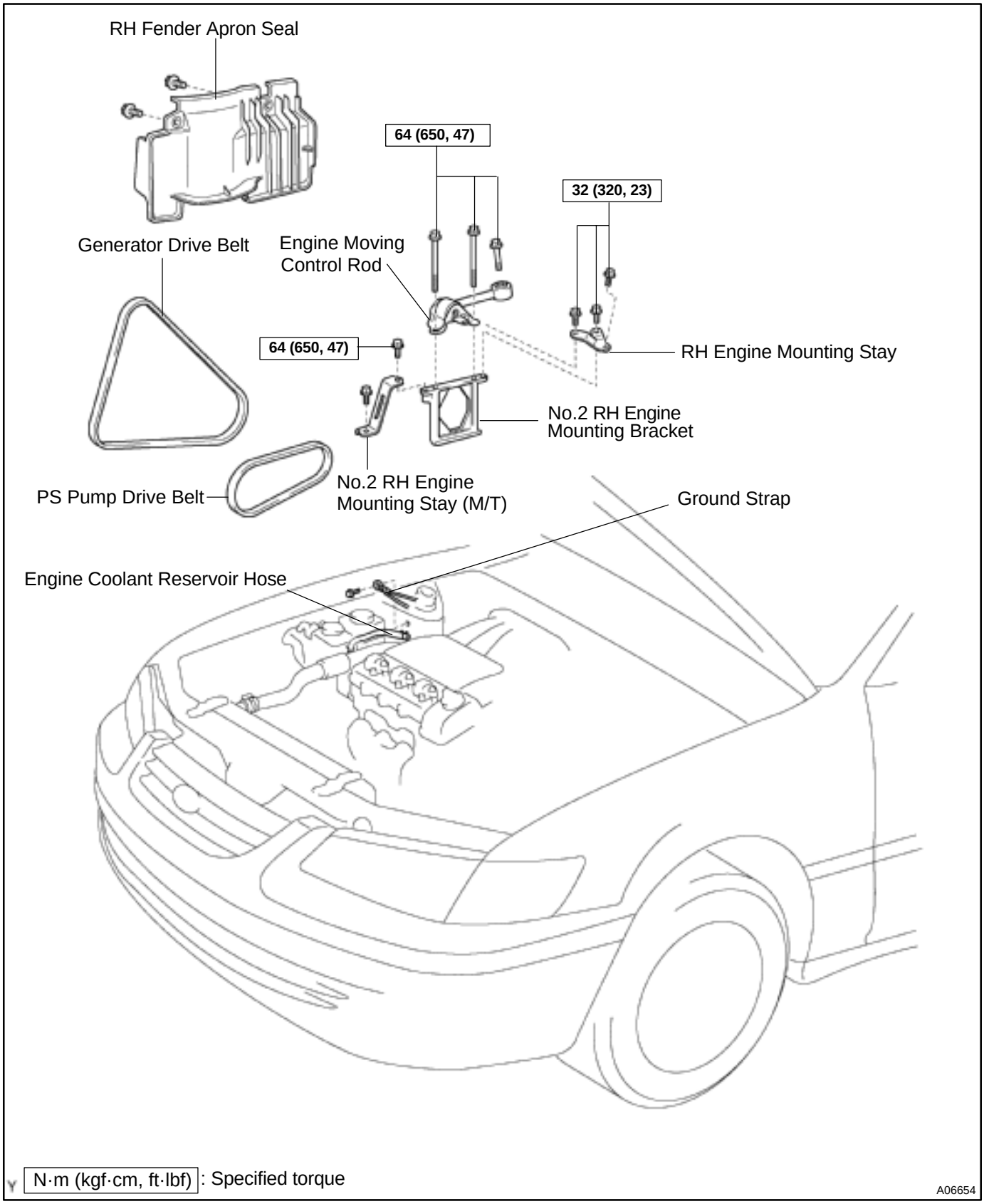

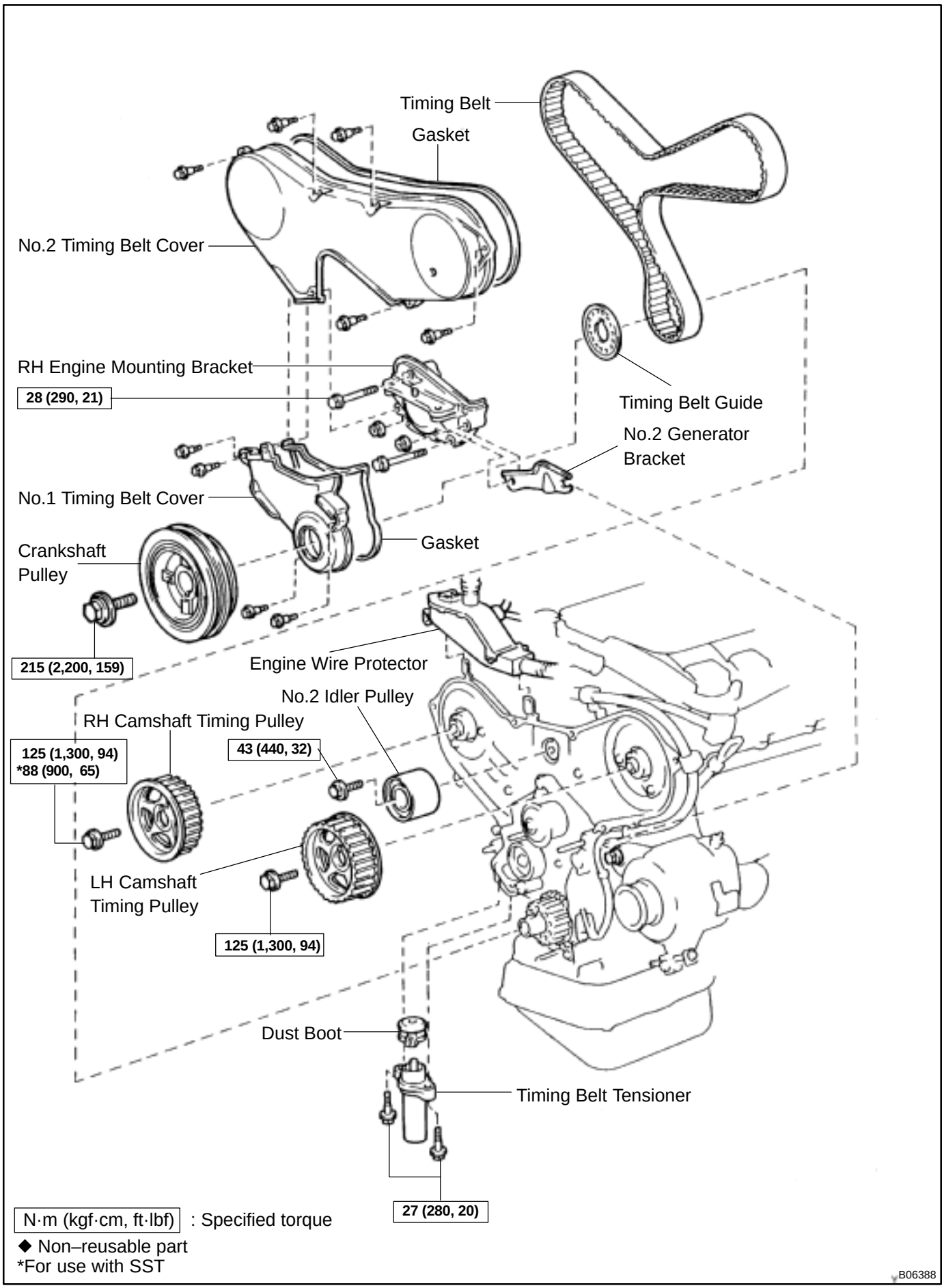
Timing Belt
Gasket
No.2 Timing Belt Cover
RH Engine Mounting Bracket
28 (290, 21)
Timing Belt Guide
No.2 Generator Bracket
No.1 Timing Belt Cover
Gasket
Crankshaft Pulley
215 (2,200, 159)
Engine Wire Protector
No.2 Idler Pulley
RH Camshaft Timing Pulley
125 (1,300, 94)
*88 (900, 65)
43 (440, 32)
LH Camshaft Timing Pulley
125 (1,300, 94)
Dust Boot
Timing Belt Tensioner
27 (280, 20)
N·m (kgf·cm, ft·lbf) : Specified torque
◆ Non–reusable part
*For use with SST
B06388

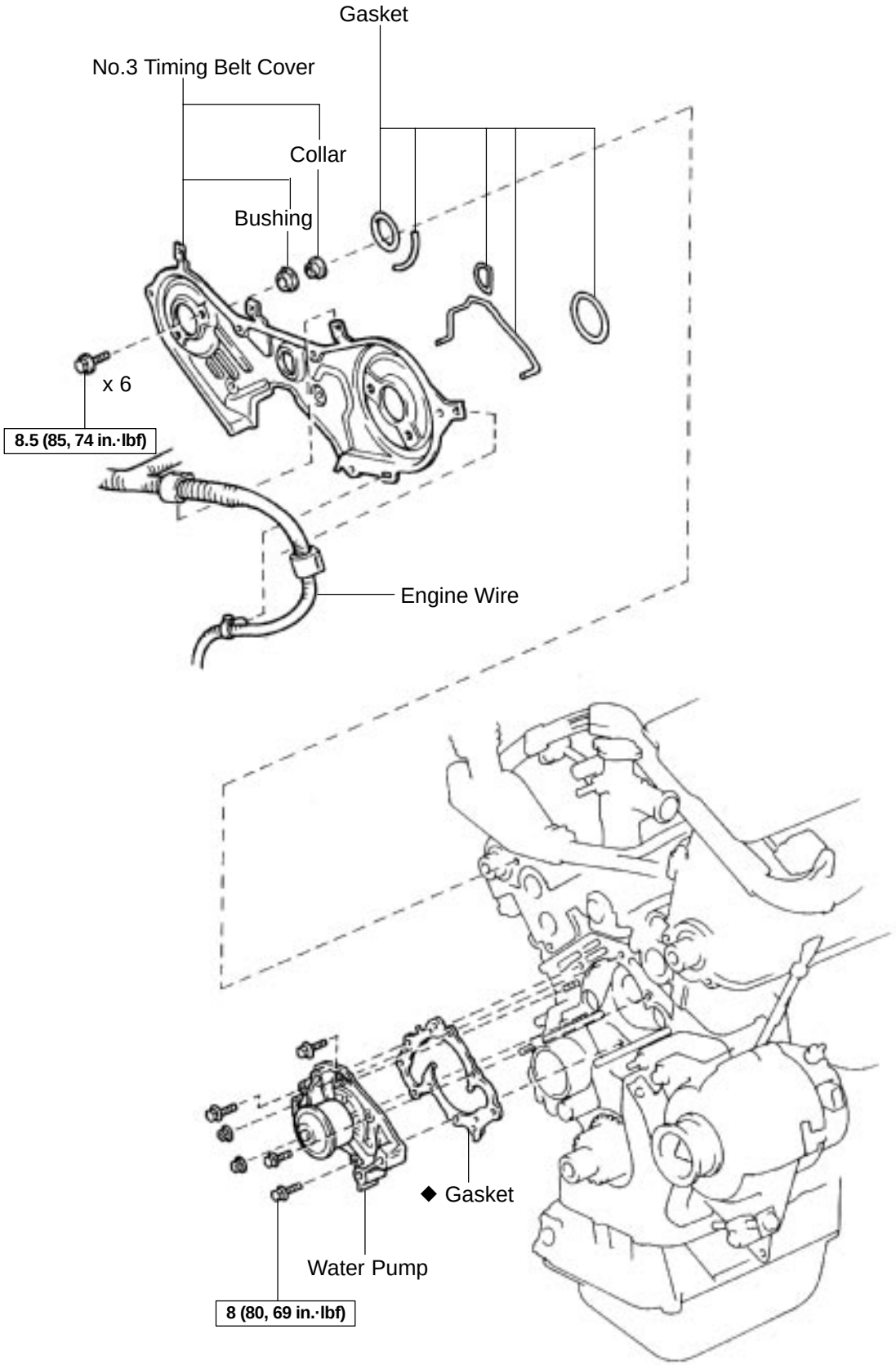

N·m (kgf·cm, ft·lbf) : Specified torque
◆ Non–reusable part

B04403

CO03E–03

REMOVAL

1. DRAIN ENGINE COOLANT
2. REMOVE TIMING BELT (See page EM–15)
3. REMOVE CAMSHAFT TIMING PULLEYS (See page EM–15)
4. REMOVE NO.2 IDLER PULLEY (See page EM–15)
5. REMOVE NO.3 TIMING BELT COVER (See page EM–32)

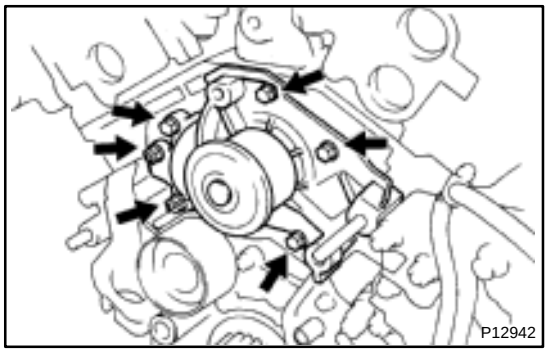

6. REMOVE WATER PUMP

Remove the 4 bolts, 2 nuts, water pump and gasket.

CO03F–03

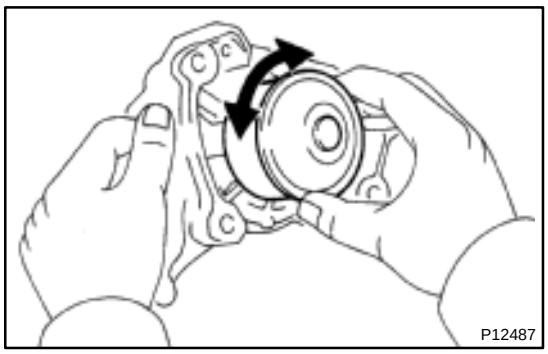

INSPECTION

1. INSPECT WATER PUMP

(a) Visually check the drain hole for coolant leakage.

If leakage is found, replace the water pump.

(b) Turn the pulley, and check that the water pump bearing moves smoothly and quietly.

If necessary, replace the water pump.

2. INSPECT TIMING BELT COMPONENTS
(See page EM–19)

CO0SO–01

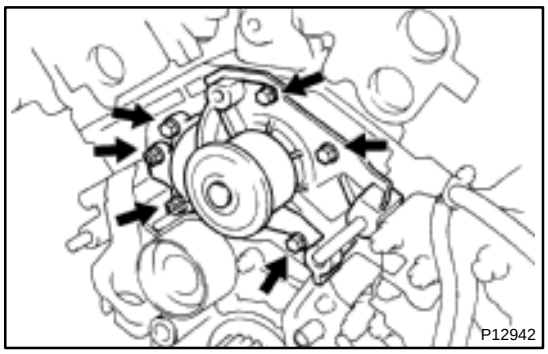

INSTALLATION

1. INSTALL WATER PUMP

Install a new gasket and the water pump with the 4 bolts and 2 nuts.

Torque: 8 N·m (80 kgf·cm, 69 in.·lbf)

NOTICE:

Do not get oil on the gasket.

2. INSTALL NO.3 TIMING BELT COVER
(See page EM–57)

3. INSTALL NO.2 IDLER PULLEY
(See page EM–21)

4. INSTALL CAMSHAFT TIMING PULLEYS
(See page EM–21)

5. INSTALL TIMING BELT
(See page EM–21)

6. FILL WITH ENGINE COOLANT

7. START ENGINE AND CHECK FOR LEAKS

8. RECHECK ENGINE COOLANT LEVEL

THERMOSTAT

CO03H–03

COMPONENTS

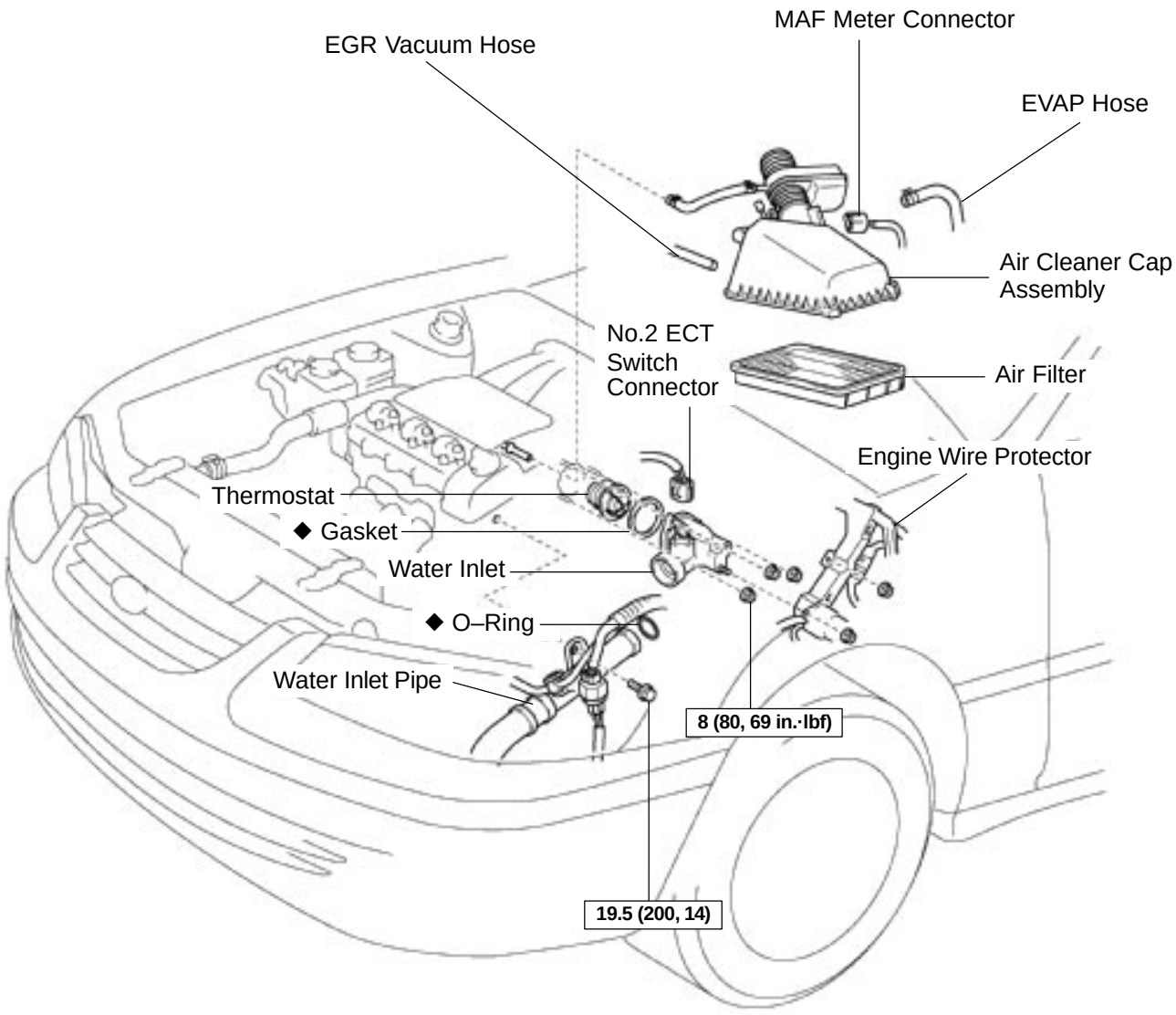

N·m (kgf·cm, ft·lbf) : Specified torque
◆ Non–reusable part

B06397

CO03I–03

REMOVAL

HINT:

Removal of the thermostat would have an adverse effect, causing a lowering of cooling efficiency. Do not remove the thermostat, even if the engine tends to overheat.

1. **DRAIN ENGINE COOLANT**
2. **REMOVE AIR CLEANER CAP ASSEMBLY AND AIR FILTER**
3. **DISCONNECT NO.2 ECT SWITCH CONNECTOR**

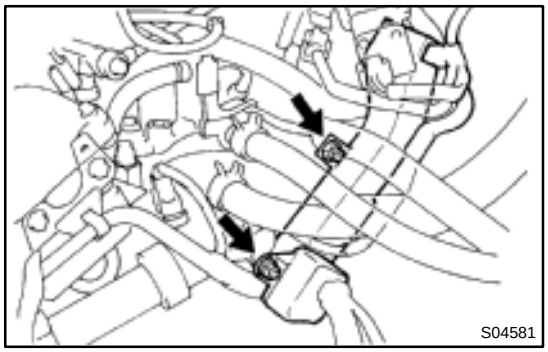

4. **DISCONNECT ENGINE WIRE PROTECTOR FROM WATER INLET AND RH CYLINDER HEAD**

Remove the 2 nuts, and disconnect the engine wire protector from the water inlet and cylinder head.

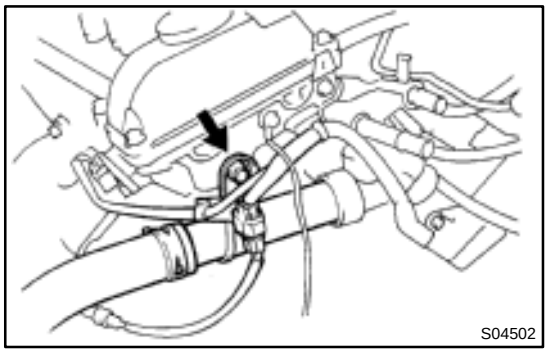

5. **DISCONNECT WATER INLET PIPE FROM WATER INLET AND LH CYLINDER HEAD**

(a) Remove the bolt, and disconnect the inlet pipe from the water inlet.

(b) Remove the O–ring from the inlet pipe.

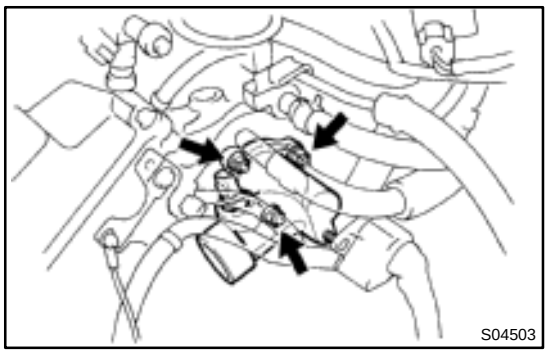

6. **REMOVE WATER INLET AND THERMOSTAT**

(a) Remove the 3 nuts, water inlet and thermostat.

(b) Remove the gasket from the thermostat.

CO03J–03

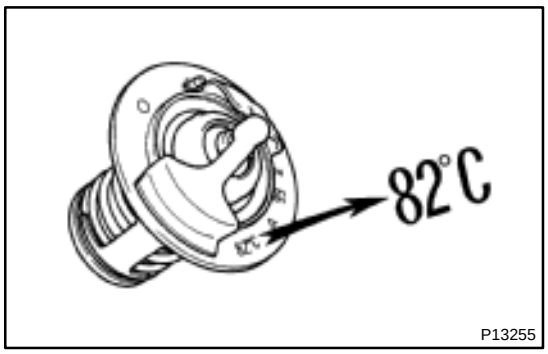

INSPECTION

INSPECT THERMOSTAT

HINT:

The thermostat is numbered with the valve opening temperature.

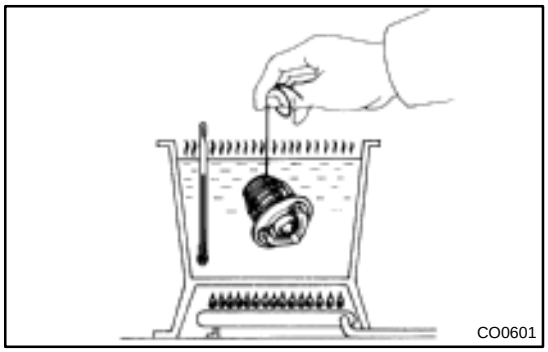

(a) Immerse the thermostat in water and gradually heat the water.

(b) Check the valve opening temperature.

Valve opening temperature: 80 – 84˚C (176 – 183˚F)

If the valve opening temperature is not as specified, replace the thermostat.

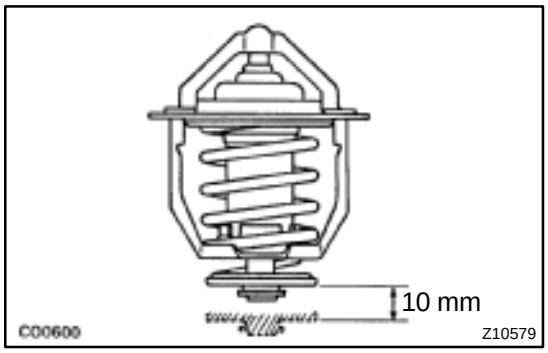

(c) Check the valve lift.

Valve lift: 10.0 mm (0.394 in.) or more at 95˚C (203˚F)

If the valve lift is not as specified, replace the thermostat.

(d) Check that the valve is fully closed when the thermostat is at low temperatures (below 40˚C (104˚F)).

If not closed, replace the thermostat.

CO03K–03

INSTALLATION

1. PLACE THERMOSTAT IN WATER PUMP

(a) Install a new gasket on to the thermostat.

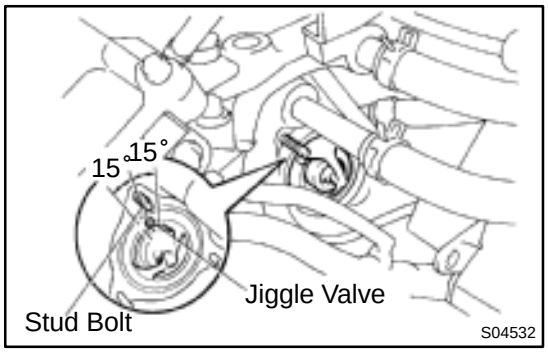

(b) Align the thermostat jiggle valve with the upper stud bolt, and insert the thermostat in the water inlet housing.

HINT:

The jiggle valve may be set within 15° of either side of the prescribed position.

2. INSTALL WATER INLET

Install the water inlet with the 3 nuts.

Torque: 8 N·m (80 kgf·cm, 69 in.·lbf)

3. INSTALL WATER INLET PIPE

(a) Install a new O–ring to the water inlet pipe.

(b) Apply soapy water to the O–ring.

(c) Connect the water inlet pipe to the water inlet.

(d) Install the bolt holding the water inlet pipe to the cylinder head.

Torque: 19.5 N·m (200 kgf·cm, 14 ft·lbf)

4. INSTALL ENGINE WIRE PROTECTOR

5. CONNECT NO.2 ECT SWITCH CONNECTOR

6. REINSTALL AIR FILTER AND AIR CLEANER CAP ASSEMBLY

7. FILL WITH ENGINE COOLANT

8. START ENGINE AND CHECK FOR LEAKS

9. RECHECK ENGINE COOLANT LEVEL

RADIATOR

CO03L–03

ON–VEHICLE CLEANING

Using water or a steam cleaner, remove any mud or dirt from the radiator core.

NOTICE:

If using a high pressure type cleaner, be careful not to deform the fins of the radiator core. (i.e. Maintain a distance between the cleaner nozzle and radiator core)

CO03M–03

ON–VEHICLE INSPECTION

1. REMOVE RADIATOR CAP

CAUTION:

To avoid the danger of being burned, do not remove the radiator cap while the engine and radiator are still hot, as fluid and steam can be blow out under pressure.

2. INSPECT RADIATOR CAP

NOTICE:

- **If the radiator cap has contaminations, always rinse it with water.**
- **When performing steps (a) and (b) below, keep the radiator cap tester at an angle of over 30° above the horizontal.**
- **Before using a radiator cap tester, wet the relief valve and pressure valve with engine coolant or water.**

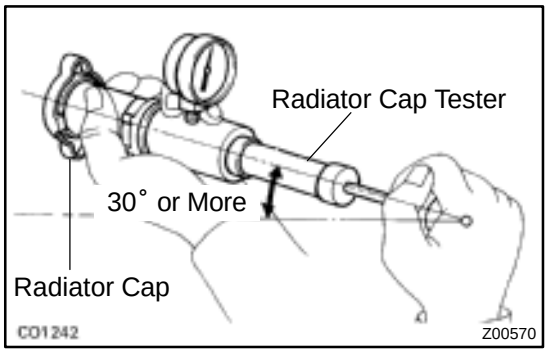

(a) Using a radiator cap tester, slowly pump the tester and check that air is coming from the vacuum valve.

Pump speed: 1 push/(3 seconds or more)

NOTICE:

Push the pump at a constant speed.

If air is not coming from the vacuum valve, replace the radiator cap.

(b) Pump the tester and measure the relief valve opening pressure.

Pump speed: 1 push within 1 second

NOTICE:

This pump speed is for the first pump only (in order to close the vacuum valve). After this, the pump speed can be reduced.

Standard opening pressure:

83 – 113 kPa (0.85 – 1.15 kgf/cm^2, 12.1 – 16.4 psi)

Minimum opening pressure:

69 kPa (0.7 kgf/cm^2, 10.0 psi)

HINT:

Use the tester's maximum reading as the opening pressure.

If the opening pressure is less than minimum, replace the radiator cap.

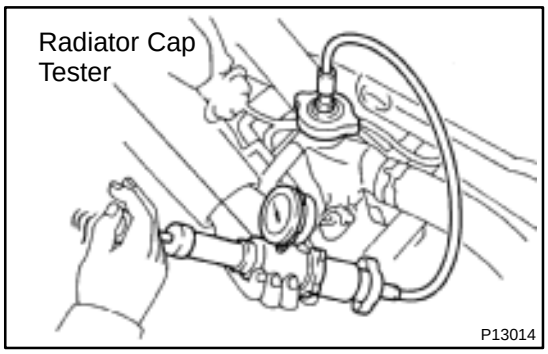

3. INSPECT COOLING SYSTEM FOR LEAKS

(a) Fill the radiator with coolant and attach a radiator cap tester.

(b) Warm up the engine.

(c) Pump it to 127 kPa (1.3 kgf/cm^2, 18.5 psi), and check that the pressure does not drop.

If the pressure drops, check the hoses, radiator or water pump for leaks. If no external leaks are found, check the heater core, cylinder block and cylinder head.

4. REINSTALL RADIATOR CAP

CO03N–03

COMPONENTS

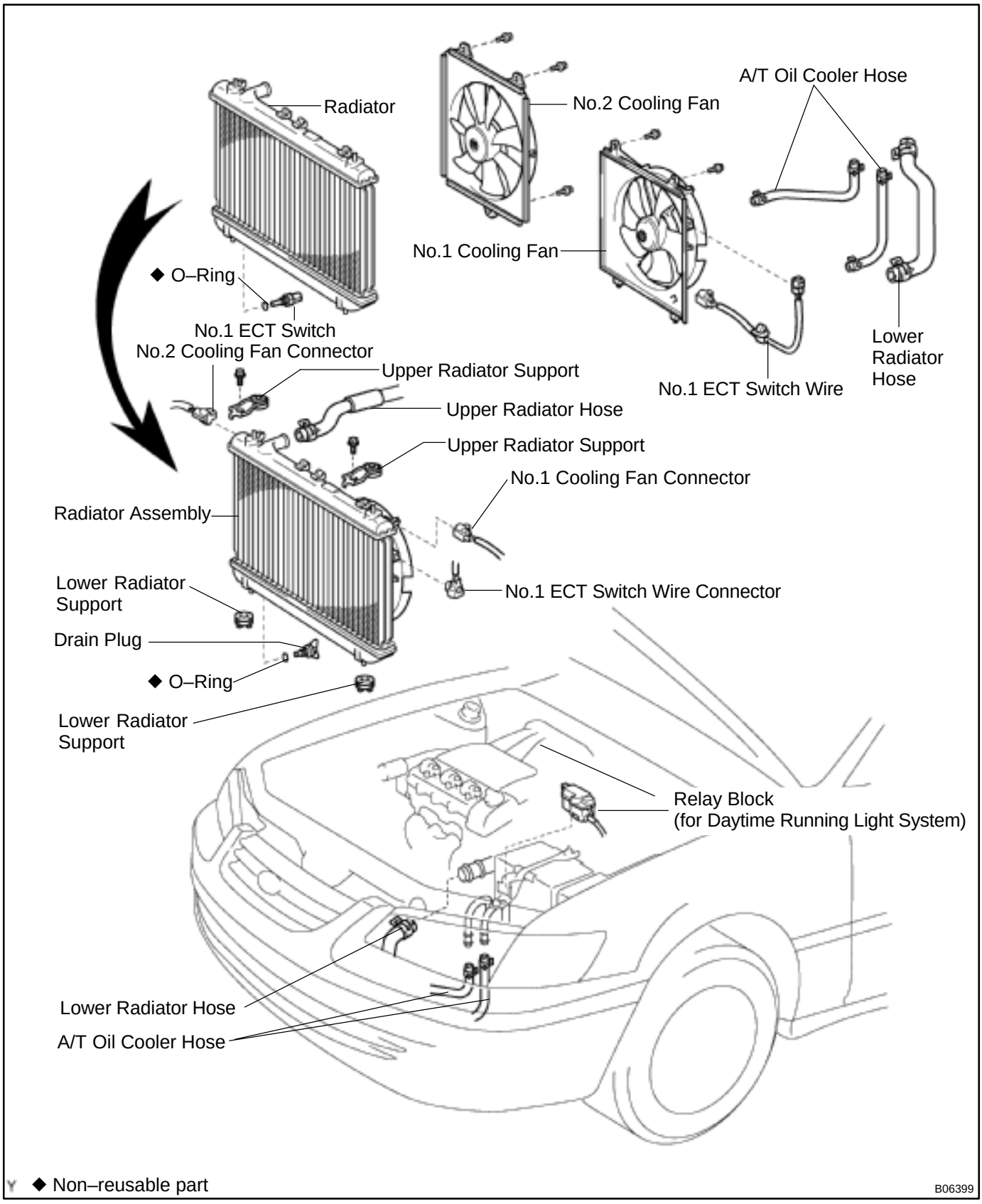

◆ Non–reusable part

B06399

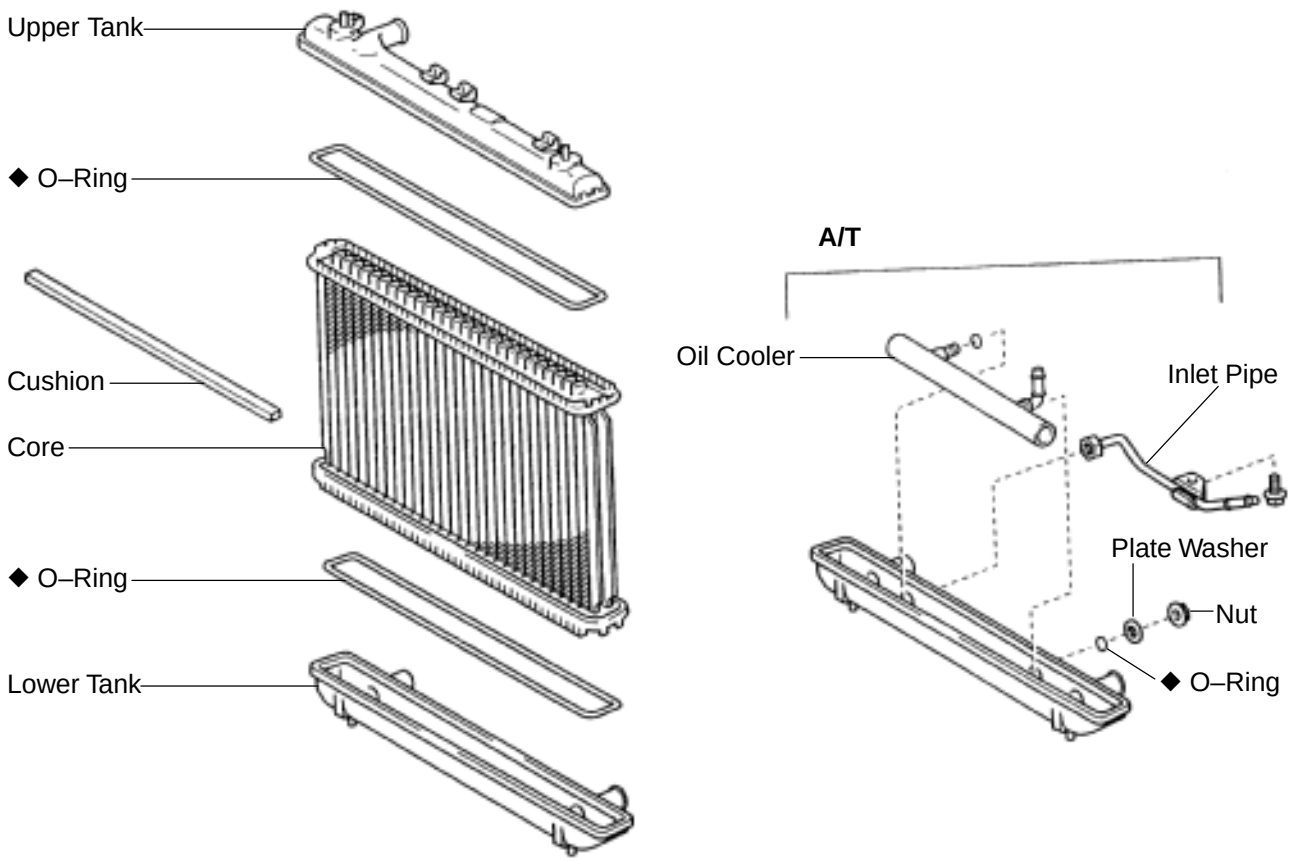

◆ Non–reusable part

S04606

CO03O–03

REMOVAL

HINT:

- At the time of installation, please refer to the following items.
- Start the engine, and check for coolant and A/T fluid leaks.
- Check the A/T fluid level. (See page DI–438)

1. **DRAIN ENGINE COOLANT**
2. **CANADA:**
   DISCONNECT RELAY BLOCK (FOR DAYTIME RUNNING LIGHT SYSTEM) FROM BATTERY HOLD–DOWN CLAMP
3. **DISCONNECT UPPER RADIATOR HOSE FROM RADIATOR**
4. **DISCONNECT LOWER RADIATOR HOSE FROM WATER INLET PIPE**
5. **DISCONNECT A/T OIL COOLER HOSES FROM OIL COOLER PIPES**
6. **DISCONNECT NO.1 AND NO.2 COOLING FAN CONNECTORS**
7. **DISCONNECT NO.1 ECT SWITCH WIRE CONNECTOR**

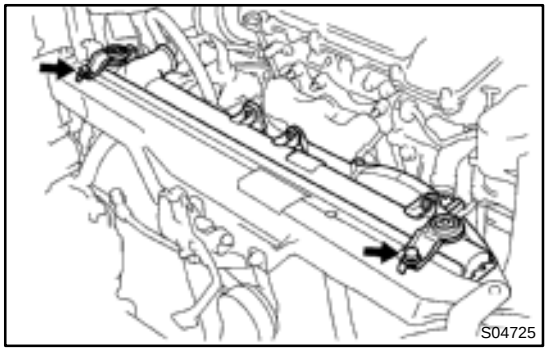

8. **REMOVE RADIATOR AND COOLING FANS ASSEMBLY**

(a) Remove the 2 bolts and 2 upper supports.
Torque: 12.8 N·m (130 kgf·cm, 9 ft·lbf)

(b) Lift out the radiator, and remove the radiator and cooling fans assembly.

(c) Remove the 2 lower supports.

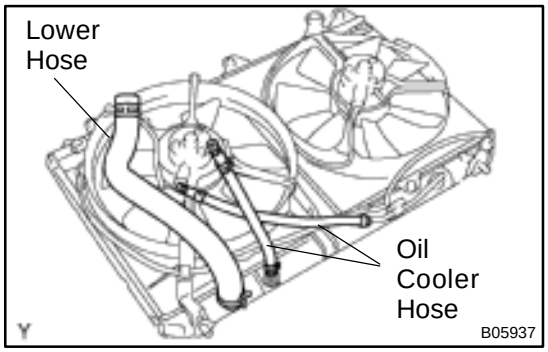

9. **REMOVE A/T OIL COOLER HOSES FROM RADIATOR**
10. **REMOVE LOWER RADIATOR HOSE FROM RADIATOR**

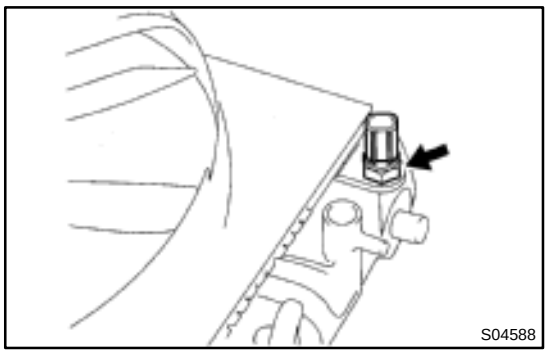

11. REMOVE NO.1 ECT SWITCH

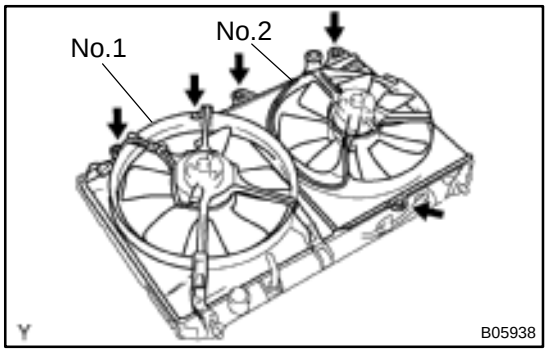

12. REMOVE NO.1 COOLING FAN FROM RADIATOR

Remove the 2 bolts and cooling fan.

Torque: 5.0 N·m (50 kgf·cm, 44 in.·lbf)

13. REMOVE NO.2 COOLING FAN FROM RADIATOR

Remove the 3 bolts and cooling fan.

Torque: 5.0 N·m (50 kgf·cm, 44 in.·lbf)

CO03P–03

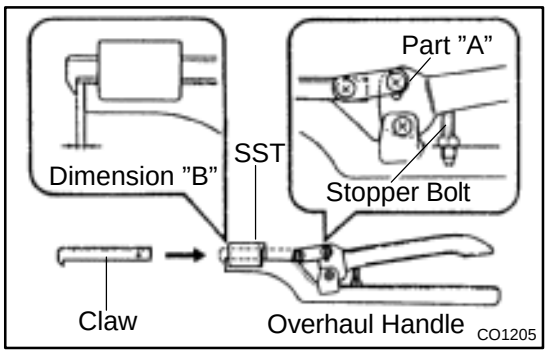

DISASSEMBLY

1. REMOVE CUSHION FROM RADIATOR

2. ASSEMBLE SST

SST 09230–01010

(a) Install the claw to the overhaul handle, inserting it in the hole in part ”A” as shown in the diagram.

(b) While gripping the handle, adjust the stopper bolt so that dimension ”B” shown in the diagram is 0.2 – 0.5 mm (0.008 – 0.020 in.).

NOTICE:

If this adjustment is not done, the claw may be damaged.

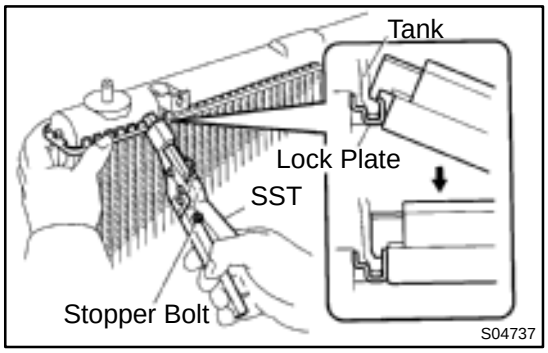

3. UNCAULK LOCK PLATES

Using SST to release the caulking, squeeze the handle until stopped by the stopper bolt.

SST 09230–01010

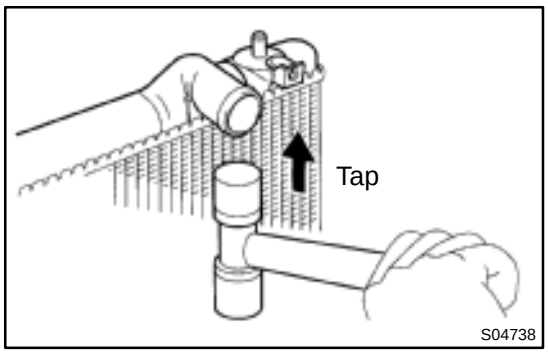

4. REMOVE TANKS AND O–RINGS

(a) Lightly tap the bracket of the radiator (or radiator hose inlet or outlet) with a soft–faced hammer and remove the tank.

(b) Remove the O–ring.

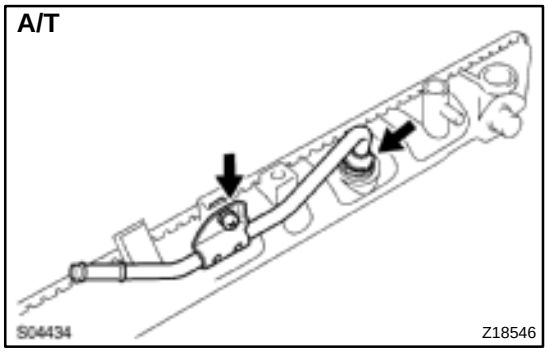

5. A/T:

REMOVE OIL COOLER FROM LOWER TANK

(a) Remove the pipe.

(b) Remove the nuts and plate washers.

(c) Remove the oil cooler and O–rings.

CO03Q–03

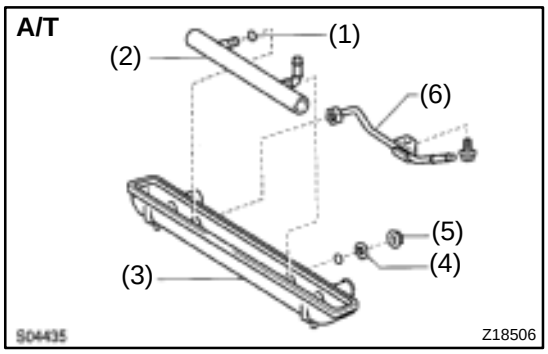

REASSEMBLY

1. A/T:

INSTALL OIL COOLER TO LOWER TANK

(a) Clean the O–ring contact surface of the lower tank and oil cooler.

(b) Install a new O–rings (1) to the oil cooler (2).

(c) Install the oil cooler with the O–rings to the lower tank (3).

(d) Install the plate washers (4), and nuts (5). Torque the nuts.

Torque: 8.3 N·m (85 kgf·cm, 74 in.·lbf)

(e) Install the pipe (6).

Torque: 14.7 N·m (150 kgf·cm, 11 ft·lbf)

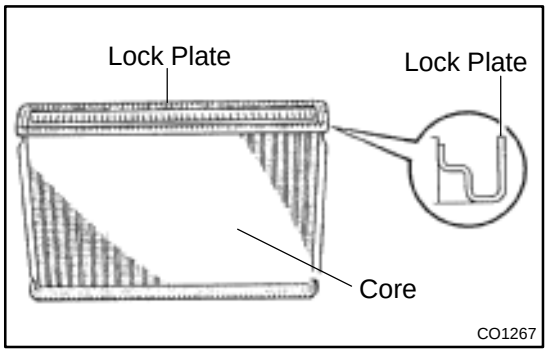

2. INSPECT LOCK PLATE

Inspect the lock plate for damage.

HINT:

- If the sides of the lock plate groove are deformed, reassembly of the tank will be impossible.
- Therefore, first correct any deformation with pliers or similar object. Water leakage will result if the bottom of the lock plate groove is damaged or dented, Therefore, repair or replace if necessary.

NOTICE:

The radiator can only be recaulked 2 times. After the 2nd time, the radiator core must be replaced.

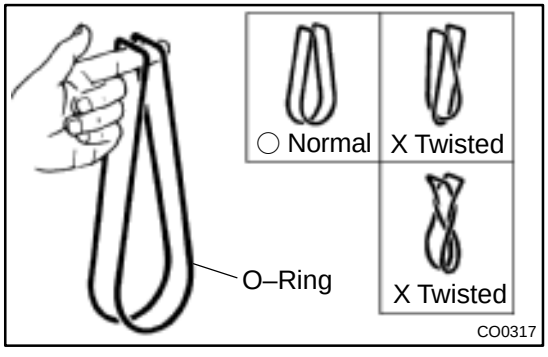

3. INSTALL NEW O–RINGS AND TANKS

(a) After checking that there are no foreign objects in the lock plate groove, install the new O–ring without twisting it.

HINT:

When cleaning the lock plate groove, lightly rub it with sand paper without scratching it.

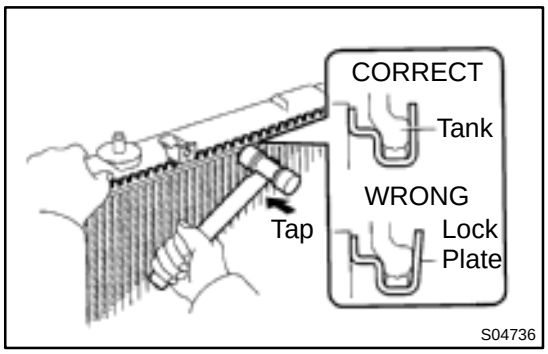

(b) Install the tank without damaging the O–ring.
(c) Tap the lock plate with a soft–faced hammer so that there is no gap between it and the tank.

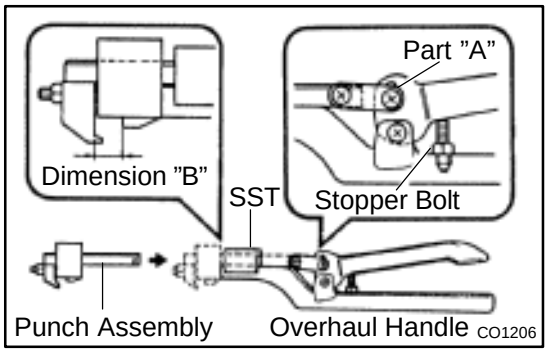

4. ASSEMBLE SST

SST 09230–01010, 09231–14010

(a) Install the punch assembly to the overhaul handle, inserting it in the hole in part ”A” as shown in the illustration.
(b) While gripping the handle, adjust the stopper bolt so that dimension ”B” shown in the diagram.
Dimension ”B”: 8.4 mm (0.34 in.)

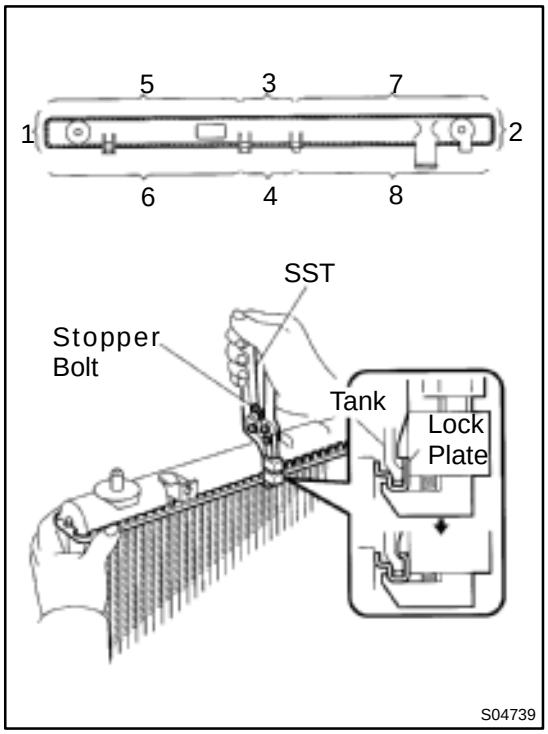

5. CAULK LOCK PLATE

(a) Lightly press SST against the lock plate in the order shown in the illustration. After repeating this a few times, fully caulk the lock plate by squeezing the handle until stopped by the stopper plate.
SST 09230–01010

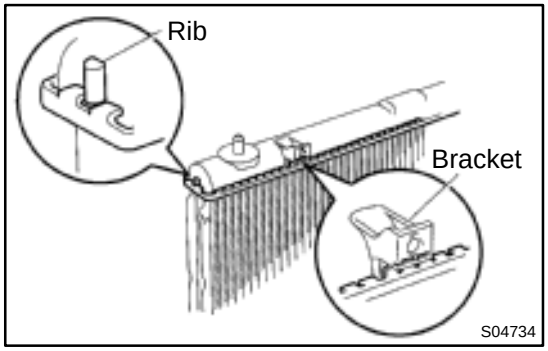

HINT:

◆ Do not stake the areas protruding around the pipes, brackets or tank ribs.

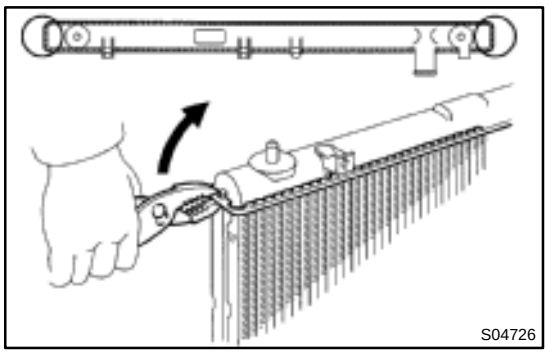

◆ The points shown in the rib sides and oil cooler near here cannot be staked with SST. Use pliers or similar object and be careful not to damage the core plates.

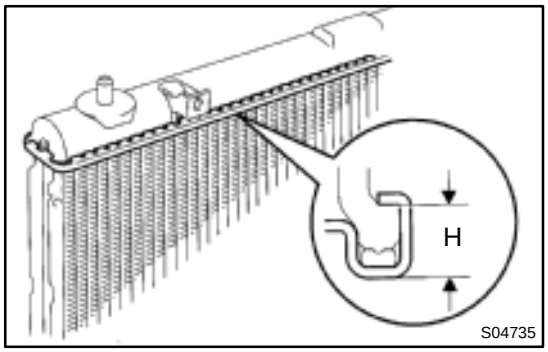

(b) Check the lock plate height (H) after completing the caulking.

Plate height (H): 7.4 – 7.8 mm (0.2959 – 0.3119 in.)

If not within the specified height, adjust the stopper bolt of the handle again and caulk again.

6. INSTALL CUSHION

CO03R–01

INSTALLATION

Installation is in the reverse order of removal. (See page CO–18)

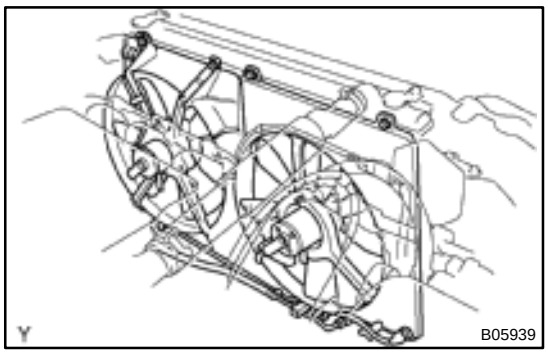

ELECTRIC COOLING FAN

CO03S–03

ON–VEHICLE INSPECTION

1. CHECK COOLING FAN OPERATION WITH LOW TEMPERATURE (Below 88˚C (190˚F))

(a) Turn the ignition switch ON.

(b) Check that the cooling fan stops.

If not, check the cooling fan relay and ECT switch, and check for a separated connector or severed wire between the cooling fan relay and ECT switch.

(c) Disconnect the No.1 ECT switch connector.

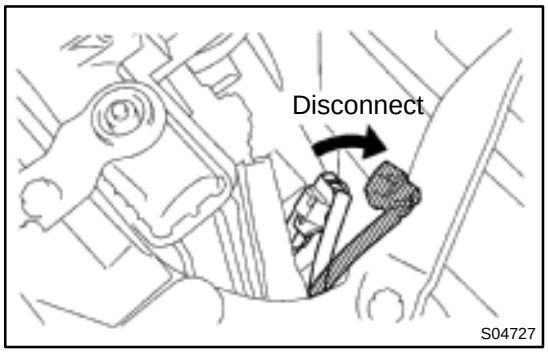

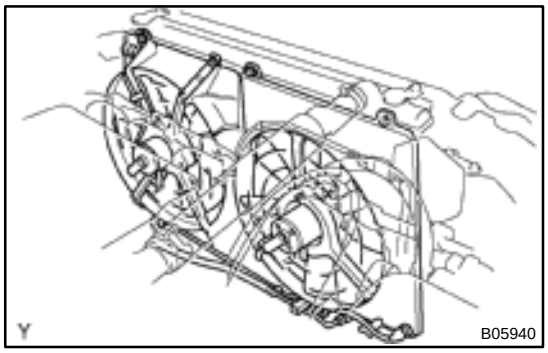

(d) Check that the cooling fan rotates.

If not, check the fuses, engine main relay, cooling fan relay, cooling fan, and check for a short circuit between the cooling fan relay and ECT switch.

(e) Reconnect the No.1 ECT switch connector.

2. CHECK COOLING FAN OPERATION WITH HIGH TEMPERATURE (Above 98˚C (208˚F))

(a) Start the engine, and raise coolant temperature to above 98˚C (208˚F).

(b) Check that the cooling fan rotates.

If not, replace the No.1 ECT switch.

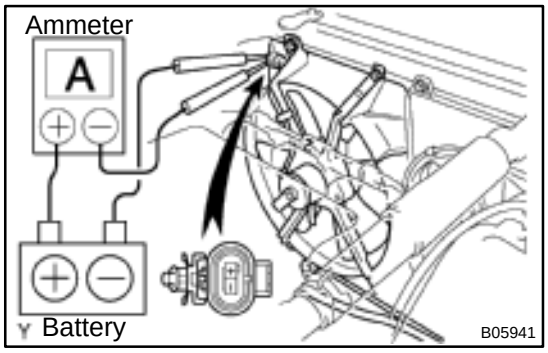

3. INSPECT NO.1 COOLING FAN

(a) Disconnect the cooling fan connector.

(b) Connect battery and ammeter to the cooling fan connector.

(c) Check that the cooling fan rotates smoothly, and check the reading on the ammeter.

Standard amperage: 8.3 – 11.3 A at 20˚C (68˚F)

(d) Reconnect the cooling fan connector.

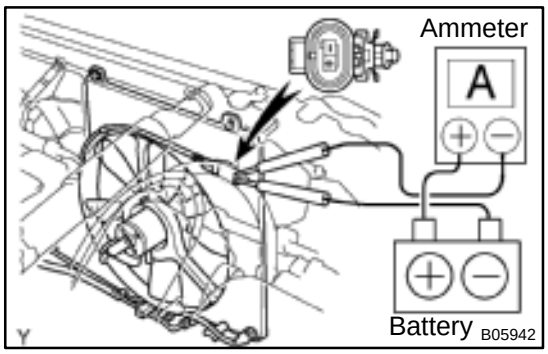

4. INSPECT NO.2 COOLING FAN

(a) Disconnect the cooling fan connector.

(b) Connect battery and ammeter to the cooling fan connector.

(c) Check that the cooling fan rotates smoothly, and check the reading on the ammeter.

Standard amperage: 8.3 – 11.3 A at 20˚C (68˚F)

(d) Reconnect the cooling fan connector.

CO03T–03

COMPONENTS

No.1

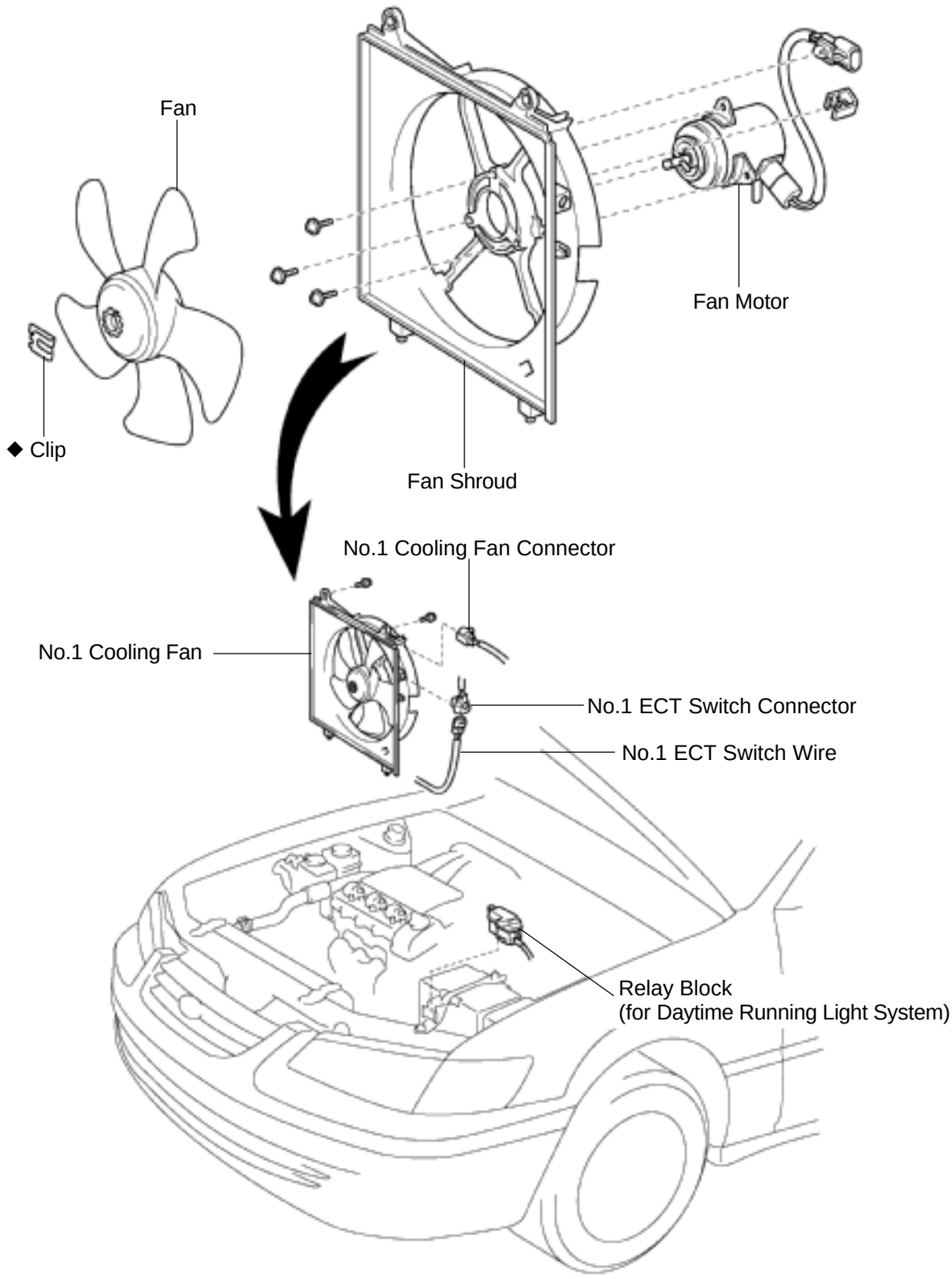

◆ Non–reusable part

B06400

No.2

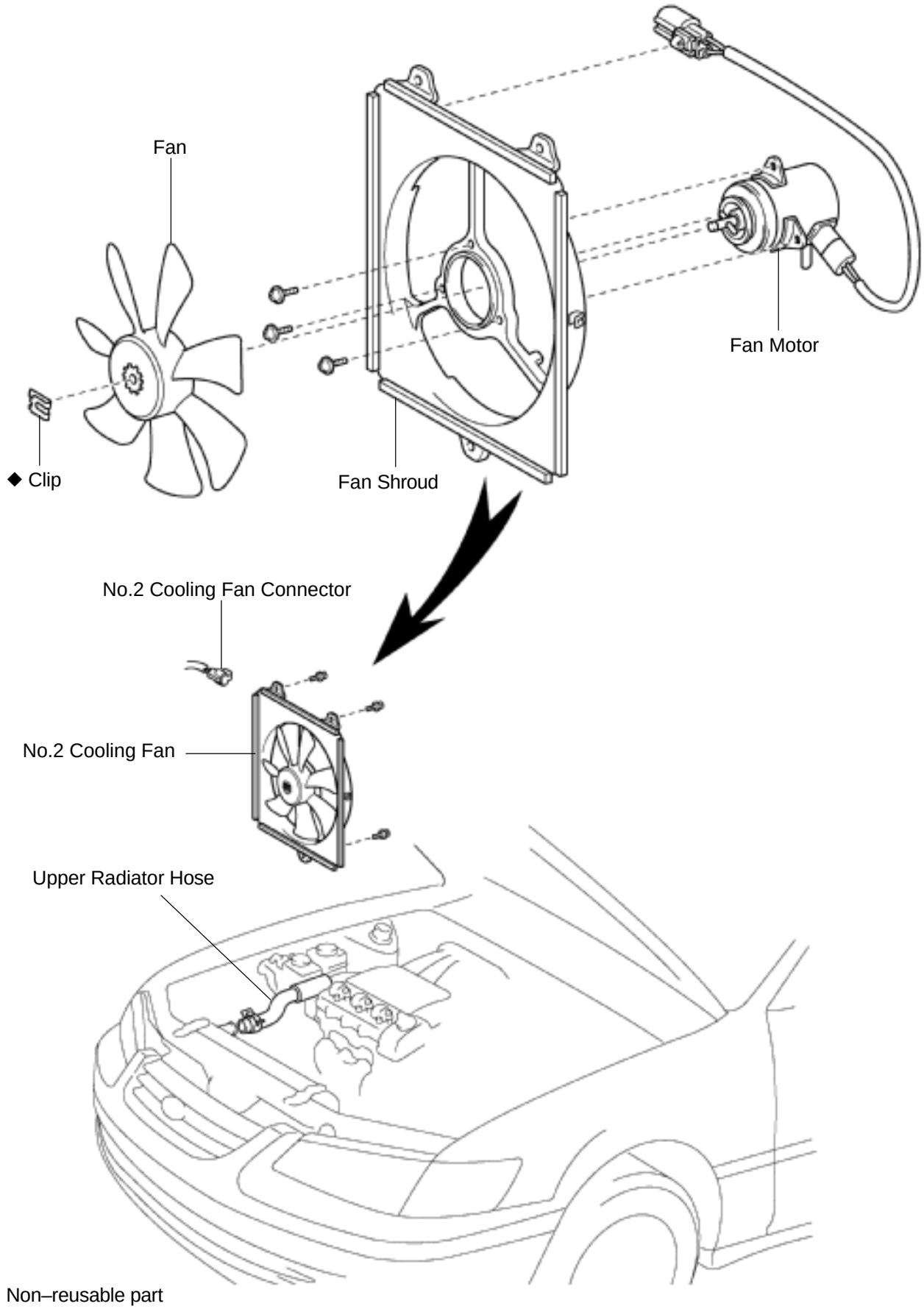
Fan
Fan Motor
◆ Clip
Fan Shroud
No.2 Cooling Fan Connector
No.2 Cooling Fan
Upper Radiator Hose
◆ Non–reusable part
B06402

CO03U–03

REMOVAL

1. REMOVE NO.1 COOLING FAN

(a) Canada:
Disconnect the relay block (for daytime running light system) from the battery hold–down clamp.

(b) Disconnect the cooling fan connector.

(c) Disconnect the No.1 ECT switch wire connector.

(d) Disconnect the No.1 ECT switch wire clamps.

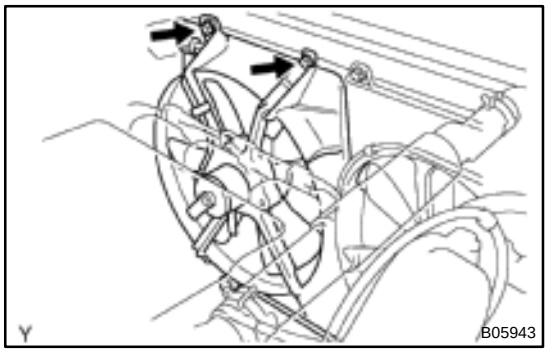

(e) Remove the 2 bolts and cooling fan.
Torque: 5.0 N·m (50 kgf·cm, 44 in.·lbf)

2. REMOVE NO.2 COOLING FAN

(a) Drain the engine coolant.

(b) Disconnect the upper radiator hose from the radiator.

(c) Disconnect the cooling fan connector.

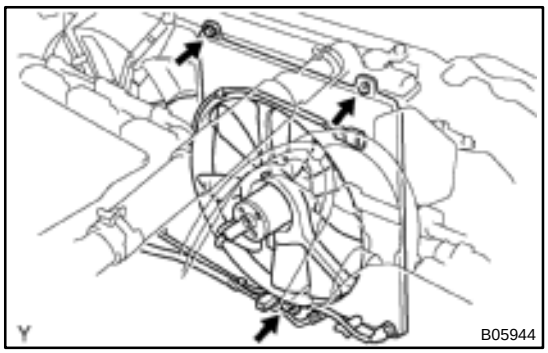

(d) Remove the 3 bolts and cooling fan.
Torque: 5.0 N·m (50 kgf·cm, 44 in.·lbf)

CO03V–03

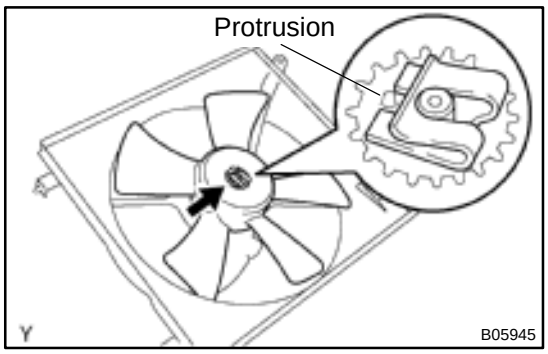

DISASSEMBLY

1. REMOVE NO.1 COOLING FAN

(a) Remove the clip and fan.

NOTICE:

When removing the clip and fan, do not apply too much force to the motor shaft. And do not scratch the motor shaft.

HINT:

At the time of installation, please refer to the following items. Install a new clip from the side opposite the protrusion on the fan.

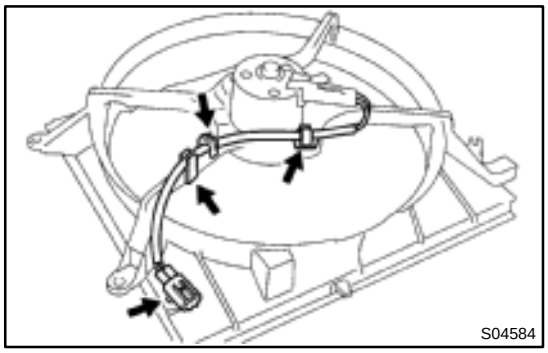

(b) Disconnect the lead wire from the fan shroud.

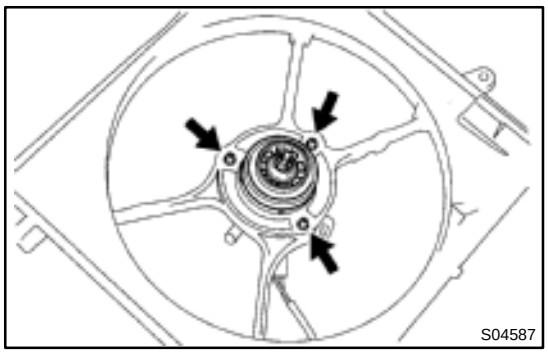

(c) Remove the 3 screws and fan motor.

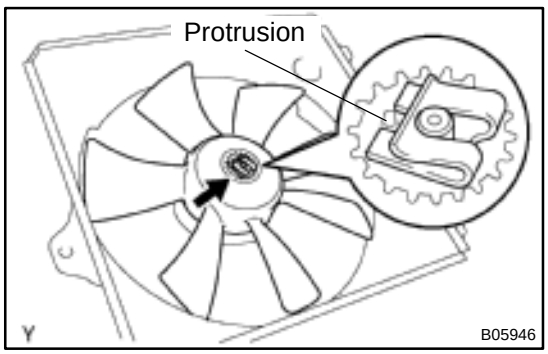

2. REMOVE NO.2 COOLING FAN

(a) Remove the clip and fan.

NOTICE:

When removing the clip and fan, do not apply too much force to the motor shaft. And do not scratch the motor shaft.

HINT:

At the time of installation, please refer to the following items. Install a new clip from the side opposite the protrusion on the fan.

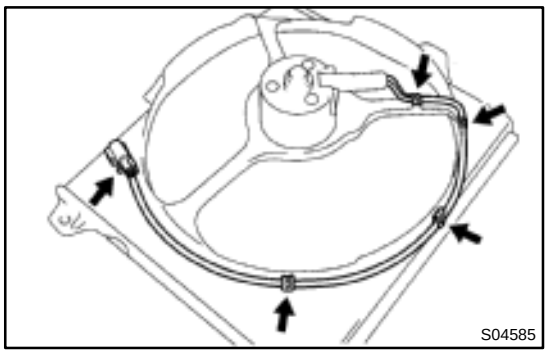

(b) Disconnect the lead wire from the fan shroud.

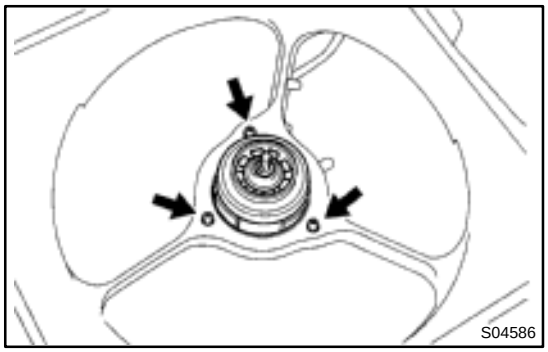

(c) Remove the 3 screws and fan motor.

CO03W–01

REASSEMBLY

Reassembly is in the reverse order of disassembly. (See page CO–30)

CO03X–01

INSTALLATION

Installation is in the reverse order of removal. (See page CO–29)

ENGINE COOLANT TEMPERATURE (ECT) SWITCH

CO03Y–04

INSPECTION

1. DRAIN ENGINE COOLANT

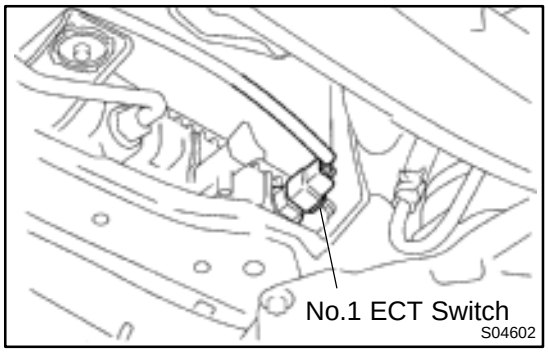

2. INSPECT NO.1 ECT SWITCH

(a) Remove the No.1 ECT switch.

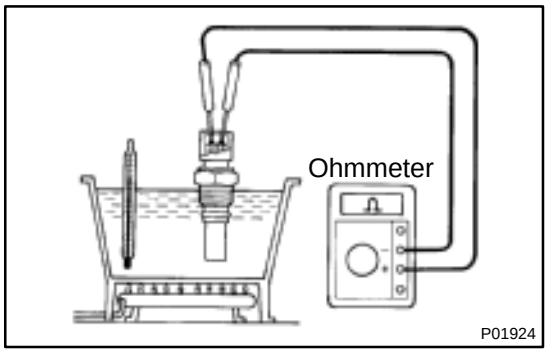

(b) Inspect the No.1 ECT switch.

(1) Using an ohmmeter, check that there is no continuity between the terminals when the coolant temperature is above 98˚C (208˚F).

If there is continuity, replace the switch.

(2) Check that there is continuity, between the terminals when the coolant temperature is below 88˚C (190˚F).

If there is no continuity, replace the switch.

(c) Reinstall the No.1 ECT switch.

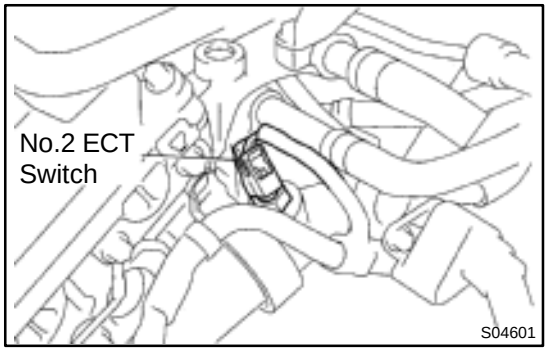

3. INSPECT NO.2 ECT SWITCH

(a) Remove the No.2 ECT switch.

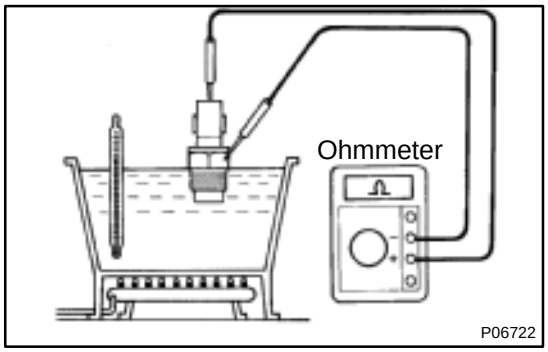

(b) Inspect the No.2 ECT switch.

(1) Using an ohmmeter, check that there is continuity between terminals when the coolant temperature is above 94˚C (201˚F).

If there is no continuity, replace the switch.

(2) Check that there is no continuity between the terminals when the coolant temperature is below 83˚C (181˚F).

If there is continuity, replace the switch.

(c) Reinstall the No.2 ECT switch.

4. REFILL ENGINE COOLANT

5. START ENGINE AND CHECK FOR COOLANT LEAKS

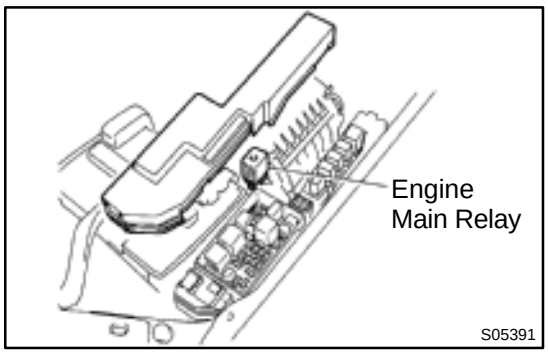

ENGINE MAIN RELAY

CO03Z–03

INSPECTION

1. REMOVE RELAY BOX COVER

2. REMOVE ENGINE MAIN RELAY (Marking: ENGINE MAIN)

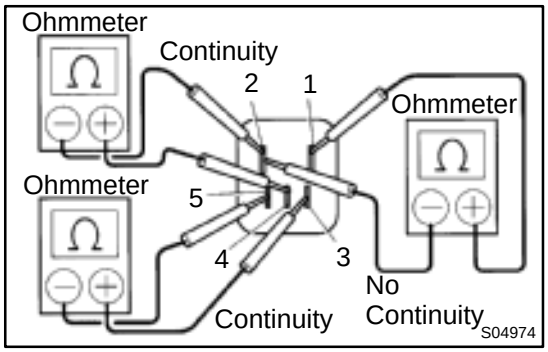

3. INSPECT RELAY CONTINUITY

(a) Using an ohmmeter, check that there is continuity between terminals 3 and 5.

If there is no continuity, replace the relay.

(b) Check that there is continuity between terminals 2 and 4.

If there is no continuity, replace the relay.

(c) Check that there is no continuity between terminals 1 and 2.

If there is continuity, replace the relay.

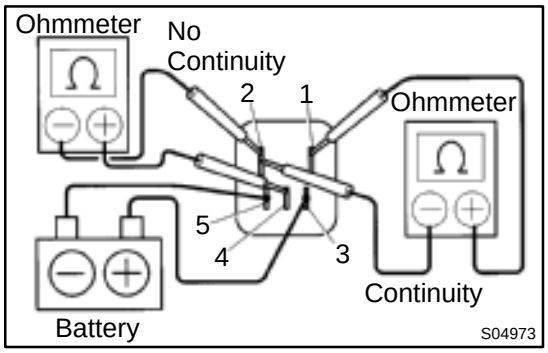

4. INSPECT RELAY OPERATION

(a) Apply battery positive voltage across terminals 3 and 5.

(b) Using an ohmmeter, check that there is no continuity between terminals 2 and 4.

If there is continuity, replace the relay.

(c) Check that there is continuity between terminals 1 and 2.

If there is no continuity, replace the relay.

5. REINSTALL ENGINE MAIN RELAY

6. REINSTALL RELAY BOX COVER

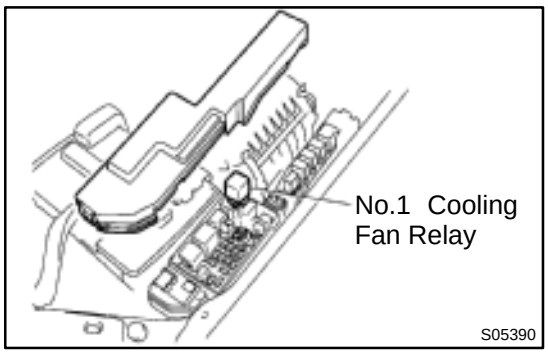

COOLING FAN RELAY

CO040–03

INSPECTION

1. REMOVE RELAY BOX COVER

2. INSPECT NO.1 COOLING FAN RELAY

(a) Remove the No.1 cooling fan relay. (Marking: FAN NO.1)

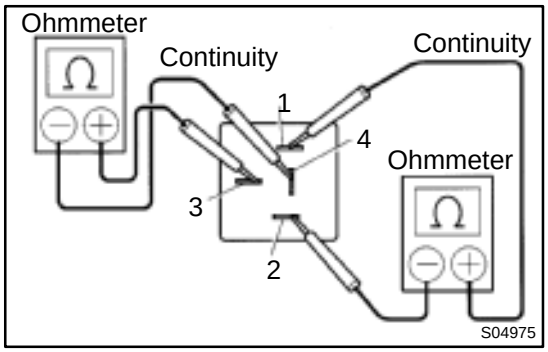

(b) Inspect the No.1 cooling fan relay continuity.

(1) Using an ohmmeter, check that there is continuity between terminals 1 and 2.

If there is no continuity, replace the relay.

(2) Check that there is continuity between terminals 3 and 4.

If there is no continuity, replace the relay.

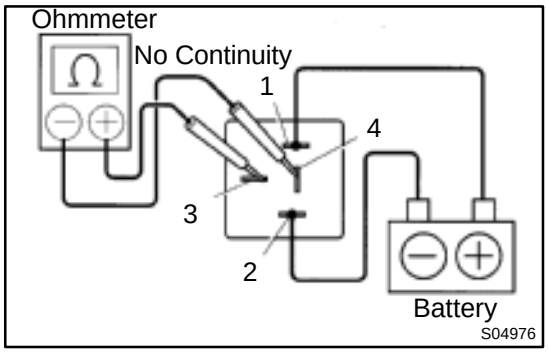

(c) Inspect the No.1 cooling fan relay operation.

(1) Apply battery positive voltage across terminals 1 and 2.

(2) Using an ohmmeter, check that there is no continuity between terminals 3 and 4.

If there is continuity, replace the relay.

(d) Reinstall the No.1 cooling fan relay.

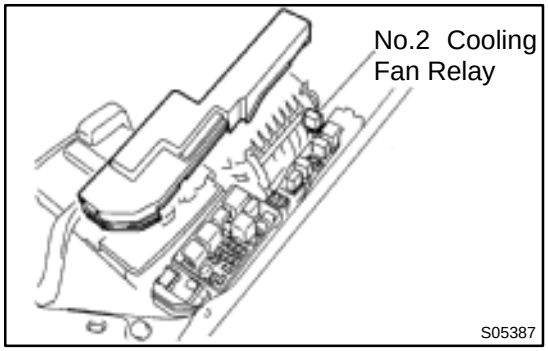

3. INSPECT NO.2 COOLING FAN RELAY

(a) Remove the No.2 cooling fan relay. (Marking: FAN NO.2)

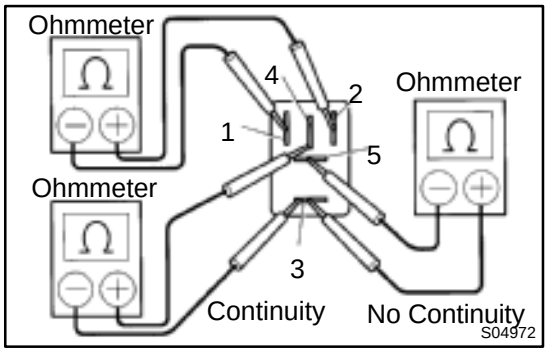

(b) Inspect the No.2 cooling fan relay continuity.

(1) Using an ohmmeter, check that there is continuity between terminals 1 and 2.

If there is no continuity, replace the relay.

(2) Check that there is continuity between terminals 3 and 4.

If there is no continuity, replace the relay.

(3) Check that there is no continuity between terminals 3 and 5.

If there is continuity, replace the relay.

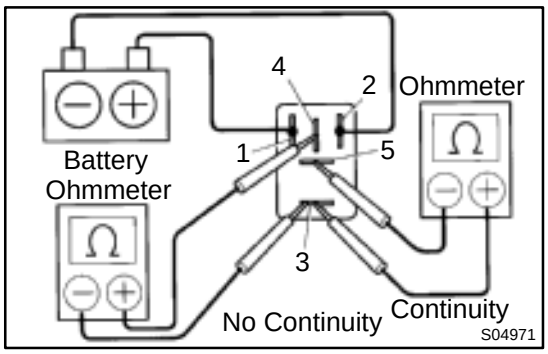

(c) Inspect the No.2 cooling fan relay operation.
(1) Apply battery positive voltage across terminals 1 and 2.
(2) Using an ohmmeter, check that there is no continuity between terminals 3 and 4.

If there is continuity, replace the relay.

(d) Reinstall the No.2 cooling fan relay.

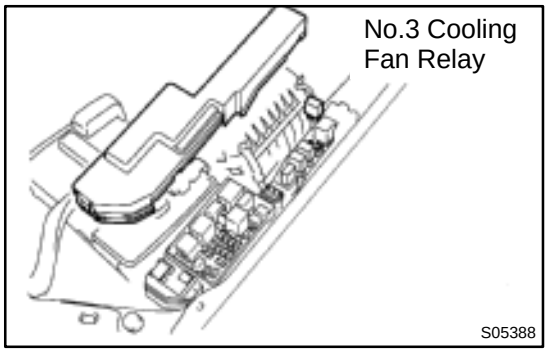

4. INSPECT NO.3 COOLING FAN RELAY

(a) Remove the No.3 cooling fan relay. (Marking: FAN NO.3)

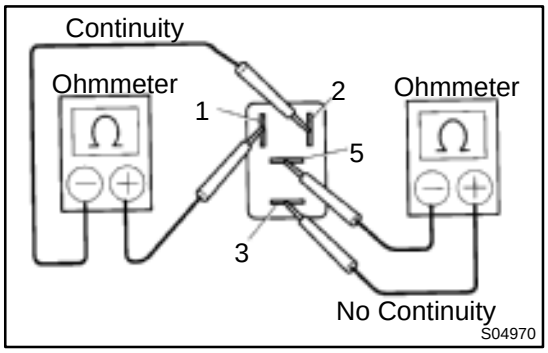

(b) Inspect the No.3 cooling fan relay continuity.
(1) Using an ohmmeter, check that there is continuity between terminals 1 and 2.

If there is mo continuity, replace the relay.

(2) Check that there is no continuity between terminals 3 and 5.

If there is continuity, replace the relay.

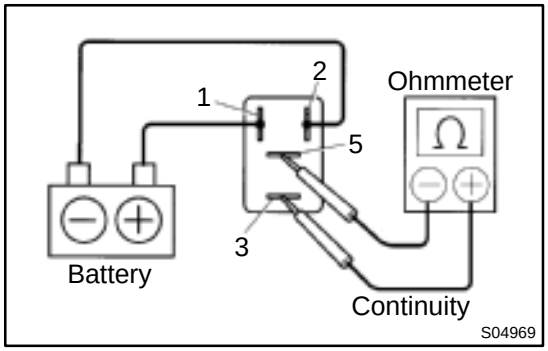

(c) Inspect the No.3 cooling fan relay operation.
(1) Apply battery positive voltage across terminals 1 and 2.
(2) Using an ohmmeter, check that there is continuity between terminals 3 and 5.

If there is no continuity, replace the relay.

(d) Reinstall the No.3 cooling fan relay.

5. REINSTALL RELAY BOX COVER

ENGINE (5S–FE)

DI00F–08

HOW TO PROCEED WITH TROUBLESHOOTING

Troubleshoot in accordance with the procedure on the following page.

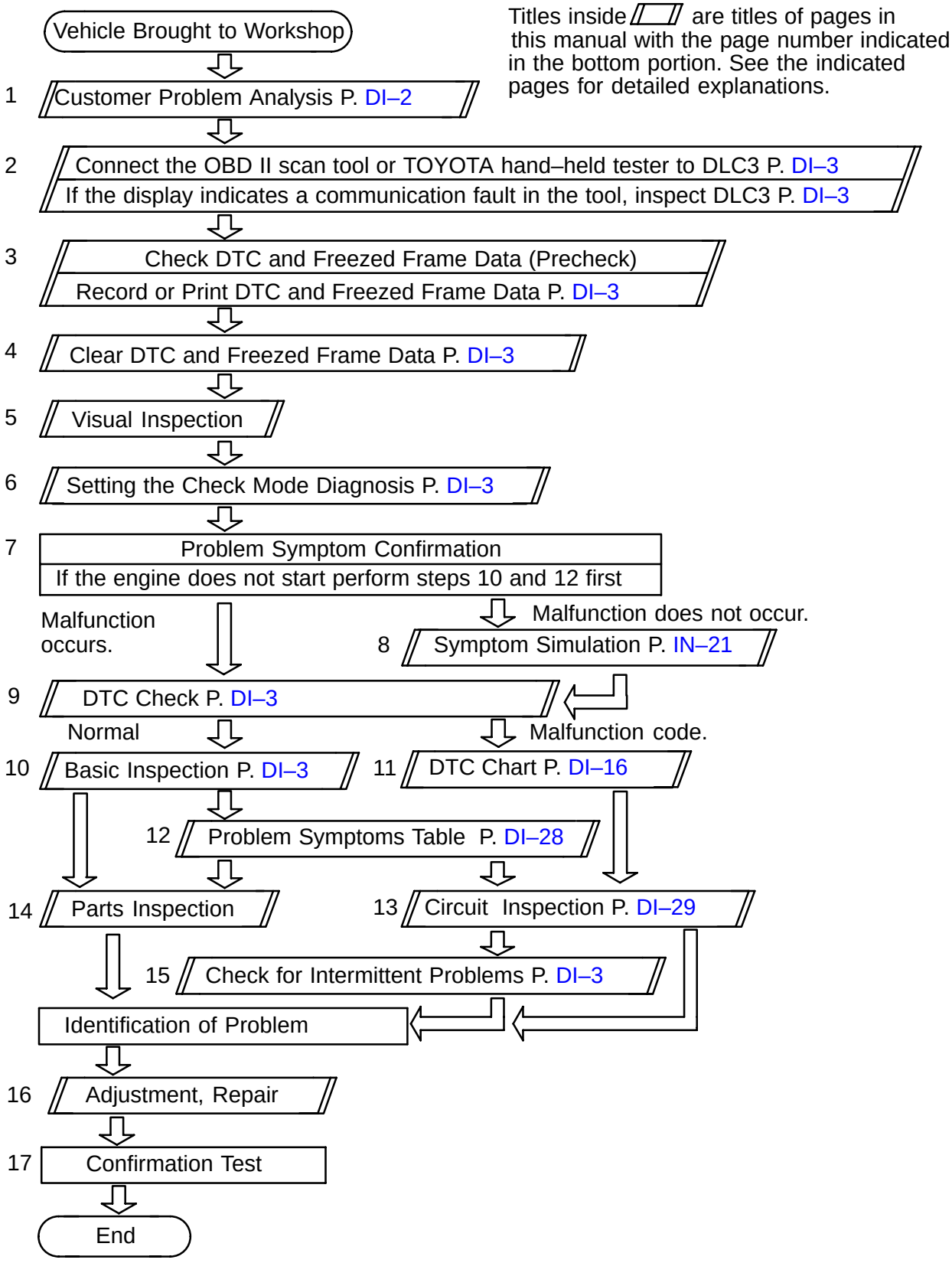

Titles inside ▱ are titles of pages in this manual with the page number indicated in the bottom portion. See the indicated pages for detailed explanations.

DI00G–05

CUSTOMER PROBLEM ANALYSIS CHECK

ENGINE CONTROL SYSTEM Check Sheet

Inspector's Name _____

Customer's Name		Model and Model Year	
Driver's Name		Frame No.	
Data Vehicle Brought in		Engine Model	
License No.		Odometer Reading	km miles

Problem Symptoms	☐ Engine does not Start	☐ Engine does not crank ☐ No initial combustion ☐ No complete combustion
	☐ Difficult to Start	☐ Engine cranks slowly ☐ Other _____
	☐ Poor Idling	☐ Incorrect first idle ☐ Idling rpm is abnormal ☐ High (rpm) ☐ Low (rpm) ☐ Rough idling ☐ Other _____
	☐ Poor Driveaability	☐ Hesitation ☐ Back fire ☐ Muffler explosion (after–fire) ☐ Surging ☐ Knocking ☐ Other _____
	☐ Engine Stall	☐ Soon after starting ☐ After accelerator pedal depressed ☐ After accelerator pedal released ☐ During A/C operation ☐ Shifting from N to D ☐ Other _____
	☐ Others	

Datas Problem Occurred		
Problem Frequency		☐ Constant ☐ Sometimes (times per day/month) ☐ Once only ☐ Other _____
Condition When Problem Occurs	Weather	☐ Fine ☐ Cloudy ☐ Rainy ☐ Snowy ☐ Various/Other _____
	Outdoor Temperature	☐ Hot ☐ Warm ☐ Cool ☐ Cold (approx. ____˚F/____˚C)
	Place	☐ Highway ☐ Suburbs ☐ Inner city ☐ Uphill ☐ Downhill ☐ Rough road ☐ Other _____
	Engine Temperature	☐ Cold ☐ Warming up ☐ After warming up ☐ Any temperature ☐ Other _____
	Engine Operation	☐ Starting ☐ Just after starting (min.) ☐ Idling ☐ Racing ☐ Driving ☐ Constant speed ☐ Acceleration ☐ Deceleration ☐ A/C switch ON/OFF ☐ Other _____

Condition of MIL		☐ Remains on	☐ Sometimes light up ☐ Does not light up
DTC Inspection	Normal Mode (Precheck)	☐ Normal	☐ Malfunction code(s) (code) ☐ Freezed frame data ( )
	Check Mode	☐ Normal	☐ Malfunction code(s) (code) ☐ Freezed frame data ( )

DI00H–08

PRE–CHECK

1. DIAGNOSIS SYSTEM

(a) Description

- When troubleshooting OBD II vehicles, the only difference from the usual troubleshooting procedure is that you connect to the vehicle the OBD II scan tool complying with SAE J1978 or TOYOTA hand–held tester, and read off various data output from the vehicle's ECM.

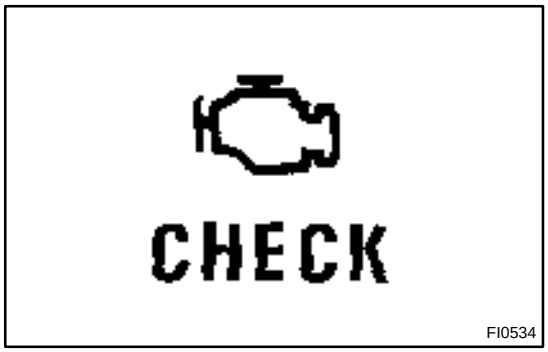

- OBD II regulations require that the vehicle's on–board computer lights up the Malfunction Indicator Lamp (MIL) on the instrument panel when the computer detects a malfunction in the emission control system / components or in the powertrain control components which affect vehicle emissions, or a malfunction in the computer. In addition to the MIL lighting up when a malfunction is detected, the applicable Diagnostic Trouble Code (DTC) prescribed by SAE J2012 are recorded in the ECM memory. (See page DI–16)

If the malfunction does not reoccur in 3 consecutive trips, the MIL goes off automarially but the DTCs remain recorded in the ECM memory.

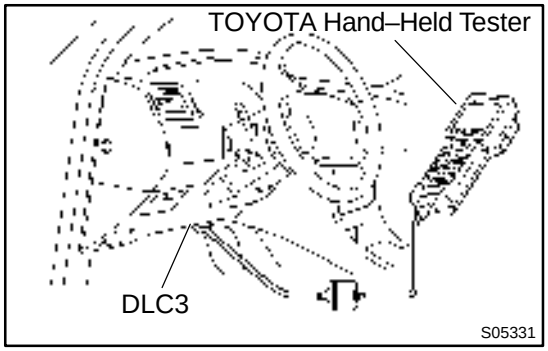

- To check the DTCs, connect the OBD II scan tool or TOYOTA hand–held tester to Data Link Connector 3 (DLC3) on the vehicle. The OBD II scan tool or TOYOTA hand–held tester also enables you to erase the DTCs and check freezed frame data and various forms of engine data (For operating instructions, see the OBD II scan tool's instruction book.) DTCs include SAE controlled codes and manufacturer controlled codes. SAE controlled codes must be set as prescribed by the SAE, while manufacturer controlled codes can be set freely by the manufacturer within the prescribed limits. (See DTC chart on page DI–16)

- The diagnosis system operates in normal mode during normal vehicle use. It also has a check mode for technicians to simulate malfunction symptoms and troubleshoot. Most DTCs use 2 trip detection logic* to prevent erroneous detection, and ensure thorough malfunction detection. By switching the ECM to check mode when troubleshooting, the technician can cause the MIL to light up for a malfunction that is only detected once or momentarily. (TOYOTA hand–held tester only)
(See page DI–3)
- *2 trip detection logic: When a malfunction is first detected, the malfunction is temporarily stored in the ECM memory.(1st trip)

If the same malfunction is detected again during the second drive test, this second detection causes the MIL to light up.(2nd trip) (However, the IG switch must be turned OFF between the 1st trip and the 2nd trip.)

- Freeze frame data:
Freeze frame data records the engine condition when a misfire (DTCs P0300 ~ P0304) or fuel trim malfunction (DTCs P0171, P0172) or other malfunction (first malfunction only), is detected.
Because freeze frame data records the engine conditions (fuel system, calculated load, engine coolant temperature, fuel trim, engine speed, vehicle speed, etc.) when the malfunction is detected, when troubleshooting it is useful for determining whether the vehicle was running or stopped, the engine warmed up or not, the air–fuel ratio lean or rich, etc. at the time of the malfunction.
- Priorities for troubleshooting:

If troubleshooting priorities for multiple DTCs are given in the applicable DTC chart, these should be followed.
If no instructions are given troubleshoot DTCs according to the following priorities.

(1) DTCs other than fuel trim malfunction (DTCs P0171, P0172), EGR (DTCs P0401, P0402), and misfire (DTCs P0300 ~ P0304).
(2) Fuel trim malfunction (DTCs P0171, P0172), and EGR (DTCs P0401, P0402).
(3) Misfire (DTCs P0300 ~ P0304).

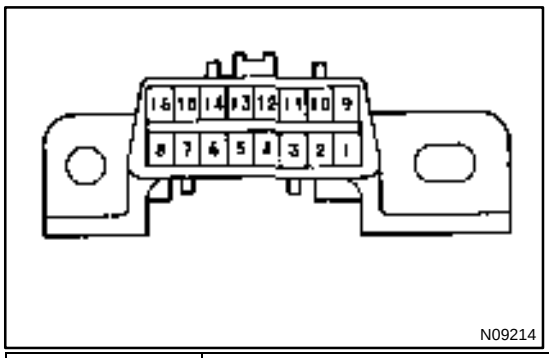

(b) Check the DLC3
The vehicle's ECM uses ISO 9141–2 for communication. The terminal arrangement of DLC3 complies with SAE J1962 and matches the ISO 9141–2 format.

Terminal No.	Connection / Voltage or Resistance	Condition
7	Bus ⊕ Line / Pulse generation	During transmission
4	Chassis Ground ↔ Body Ground /1 Ω or less	Always
5	Signal Ground ↔ Body Ground /1 Ω or less	Always
16	Battery Positive ↔ Body Ground /9 ~ 14 V	Always

HINT:
If your display shows "UNABLE TO CONNECT TO VEHICLE" when you have connected the cable of the OBD II scan tool or TOYOTA hand–held tester to DLC3, turned the ignition switch ON and operated the scan tool, there is a problem on the vehicle side or tool side.

- If communication is normal when the tool is connected to another vehicle, inspect DLC3 on the original vehicle.
- If communication is still not possible when the tool is connected to another vehicle, the problem is probably in the tool itself, so consult the Service Department listed in the tool's instruction manual.

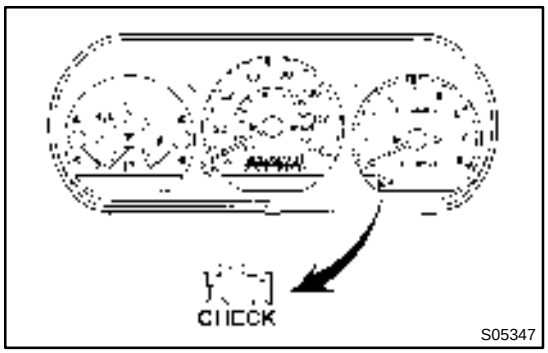

2. INSPECT DIAGNOSIS (Normal Mode)

(a) Check the MIL.
(1) The MIL comes on when the ignition switch is turned ON and the engine is not running.

HINT:
If the MIL does not light up, troubleshoot the combination meter (See page BE–2).

(2) When the engine started, the MIL should go off. If the lamp remains on, the diagnosis system has detected a malfunction or abnormality in the system.

(b) Check the DTC.

NOTICE:
TOYOTA hand–held tester only: When the diagnosis system is switched from normal mode to check mode, it erases all DTCs and freezed frame data recorded in normal mode. So before switching modes, always check the DTCs and freezed frame data, and note them down.

(1) Prepare the OBD II scan tool (complying with SAE J1978) or TOYOTA hand–held tester.

(2) Connect the OBD II scan tool or TOYOTA hand–held tester to DLC3 under the instrument panel lower pad.
(3) Turn the ignition switch ON and turn the OBD II scan tool or TOYOTA hand–held tester switch ON.
(4) Use the OBD II scan tool or TOYOTA hand–held tester to check the DTCs and freezed frame data and note them down. (For operating instructions, see the OBD II scan tool's instruction book.)
(5) See page DI–3 to confirm the details of the DTCs.

NOTICE:

- **When simulating symptoms with an OBD II scan tool (excluding TOYOTA hand–held tester) to check the DTCs, use normal mode. For code on the DTC chart subject to "2 trip detection logic", perform the following either action.**
- **Turn the ignition switch OFF after the symptom is simulated the first time. Then repeat the simulation process again. When the problem has been simulated twice, the MIL lights up and the DTCs are recorded in the ECM.**
- **Check the 1st trip DTC using Mode 7 (Continuous Test Results) for SAE J1979.**

(c) Clear the DTC.
The DTCs and freezed frame data will be erased by either action.
(1) Operating the OBD II scan tool (complying with SAE J1978) or TOYOTA hand–held tester to erase the codes. (See the OBD II scan tool's instruction book for operating instructions.)
(2) Disconnecting the battery terminals or EFI fuse.

NOTICE:

If the TOYOTA hand–held tester switches the ECM from normal mode to check mode or vice–versa, or if the ignition switch is turned from ON to ACC or OFF during check mode, the DTCs and freezed frame data will be erased.

3. INSPECT DIAGNOSIS (Check Mode)

HINT:

TOYOTA hand–held tester only:

Compared to the normal mode, the check mode has an increased sensitivity to detect malfunctions.

Furthermore, the same diagnostic items which are detected in the normal mode can also be detected in the check mode.

(a) Check the DTC.

(1) Initial conditions

- Battery positive voltage 11 V or more
- Throttle valve fully closed
- Transmission in P or N position
- Air conditioning switched OFF

(2) Turn ignition switch OFF.

(3) Prepare the TOYOTA hand–held tester.

(4) Connect the TOYOTA hand–held tester to the DLC3 under the instrument panel lower pad.

(5) Turn the ignition switch ON and switch the TOYOTA hand–held tester ON.

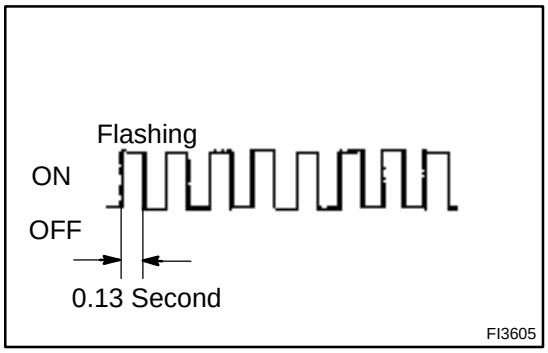

(6) Switch the TOYOTA hand–held tester normal mode to check mode. (Check that the MIL flashes.)

NOTICE:

If the TOYOTA hand–held tester switches the ECM from normal mode to check mode or vice–versa, or if the ignition switch is turned from ON to ACC or LOCK during check mode, the DTCs and freezed frame data will be erased.

(7) Start the engine. (The MIL goes out after the engine start.)

(8) Simulate the conditions of the malfunction described by the customer.

NOTICE:

Leave the ignition switch ON until you have checked the DTC, etc.

(9) After simulating the malfunction conditions, use the TOYOTA hand–held tester diagnosis selector to check the DTCs and freezed frame data, etc.

HINT:

Take care not to turn the ignition switch OFF. Turning the ignition switch OFF switches the diagnosis system from check mode to normal mode. So all DTCs, etc. are erased.

(10) After checking the DTC, inspect the applicable circuit.

4. FAIL–SAFE CHART

If any of the following codes is recorded, the ECM enters fail–safe mode.

DTC No.	Fail–Safe Operation	Fail–Safe Deactivation Conditions
P0105	Ignition timing fixed at 5° BTDC	Returned to normal condition
P0110	Intake air temperature is fixed at 20°C (68°F)	Returned to normal condition
P0115	Engine coolant temperature is fixed at 80°(176°F)	Returned to normal condition
P0120	VTA is fixed at 0°	The following condition must be repeated at least 2 times consecutively VTA ≧ 0.1 V and > 0.95 V
P0135 P0141	The heater circuit in witch an abnormality is detected is turned off	Ignition switch OFF
P0325	Max. timing retardation	Ignition switch OFF
P0336	Fuel cut	Returned to normal condition
P1135	The heater circuit in which an abnormality is detected is turned off	Ignition switch OFF
P1300 P1310	Fuel cut	IGF signal is detected for 2 consecutive ignitions

5. CHECK FOR INTERMITTENT PROBLEMS

TOYOTA HAND–HELD TESTER only:

By putting the vehicle's ECM in check mode, 1 trip detection logic is possible instead of 2 trip detection logic and sensitivity to detect open circuits is increased. This makes it easier to detect intermittent problems.

(1) Clear the DTC (See page DI–3).
(2) Set the check mode (See page DI–3).
(3) Perform a simulation test (See page IN–21).
(4) Check the connector and terminal (See page IN–31).
(5) Handle the connector (See page IN–31).

6. BASIC INSPECTION

When the malfunction code is not confirmed in the DTC check, troubleshooting should be performed in the order for all possible circuits to be considered as the causes of the problems. In many cases, by carrying out the basic engine check shown in the following flow chart, the location causing the problem can be found quickly and efficiently. Therefore, use of this check is essential in engine troubleshooting.

1	**Is battery positive voltage 11 V or more when engine is stopped?**

NO → **Charge or replace battery.**

YES

2	**Is engine cranked?**

NO → **Proceed to page ST–2 and continue to troubleshoot.**

YES

3	**Does engine start?**

NO → **Go to step 7.**

YES

4	**Check air filter.**

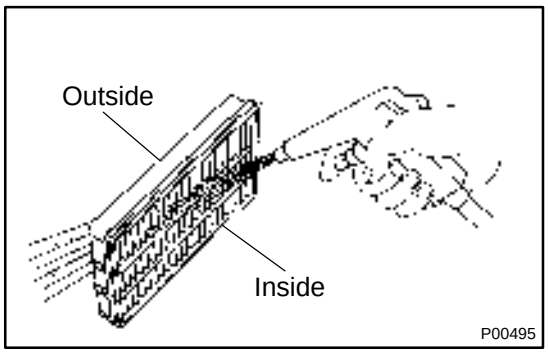

PREPARATION:
Remove the air filter.
CHECK:
Visually check that the air filter is not dirty or excessive oily.
HINT:
If necessary, clean the filter with compressed air. First blow from inside thoroughly, then blow from outside of the filter.

NG → **Repair or replace.**

OK

5	**Check idle speed.**

PREPARATION:

(a) Warm up the engine to normal operating temperature.
(b) Switch off all the accessories.
(c) Switch off the air conditioning.
(d) Shift the transmission into the N position.
(e) Connect the OBD II scan tool or TOYOTA hand–held tester to DLC3 on the vehicle.

CHECK:

Use the CURRENT DATA to check the idle speed.

OK:

Idle speed: 650 ~ 750 rpm

NG → **Proceed to problem symptoms table on page DI–28.**

OK

6	Check ignition timing.

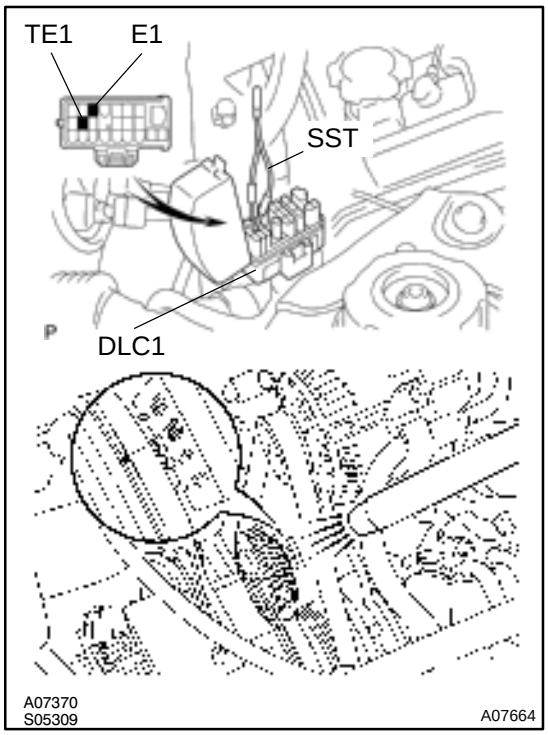

PREPARATION:

(a) Warm up the engine to normal operating temperature.
(b) Shift the transmission into the N position.
(c) Keep the engine speed at idle.
(d) Using SST, connect terminals TE1 and E1 of the DLC1.
SST 09843–18020
(e) Using a timing light, connect the tester to the No.1 high–tension cord.

CHECK:

Check the ignition timing.

OK:

Ignition timing: 10° BTDC at idle

NG → **Proceed to page IG–1 and continue to trouble-shoot.**

OK

Proceed to problem symptoms table on page DI–28.

7	**Check fuel pressure.**

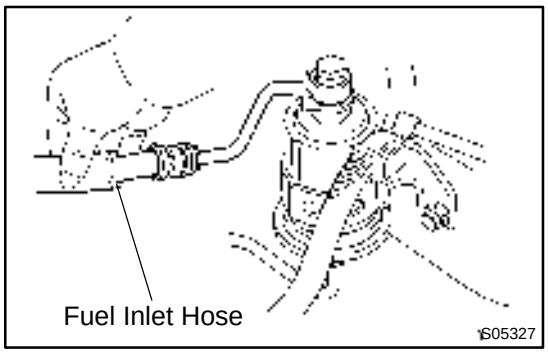

PREPARATION:

(a) Be sure that enough fuel is in the tank.
(b) Connect the TOYOTA hand–held tester to the DLC3.
(c) Turn the ignition switch ON and push TOYOTA hand–held tester main switch ON.
(d) Use the ACTIVE TEST mode to operate the fuel pump.
(e) Please refer to the TOYOTA hand–held tester operator's manual for further details.
(f) If you have no TOYOTA hand–held tester, connect the positive (+) and negative (–) leads from the battery to the fuel pump connector (See page SF–6).

CHECK:

Check for fuel pressure in the fuel inlet hose when it is pinched off.

HINT:

At this time, you will hear a fuel flowing noise.

NG → **Proceed to page SF–6 and continue to trouble-shoot.**

OK

8	Check for spark.

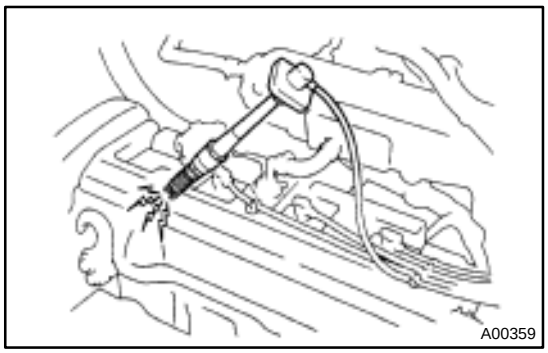

PREPARATION:

(a) Disconnect the high–tension cord from the spark plug.
(b) Remove the spark plug.
(c) Install the spark plug to the high–tension cord.
(d) Disconnect the injector connector.
(e) Ground the spark plug.

CHECK:

Check if spark occurs while the engine is being cranked.

NOTICE:

To prevent excess fuel being injected from the injectors during this test, don't crank the engine for more than 5 ~ 10 seconds at a time.

NG → **Proceed to page IG–1 and continue to trouble-shoot.**

OK

Proceed to problem symptoms table on page DI–28.

7. ENGINE OPERATING CONDITION

NOTICE:

The values given below for "Normal Condition" are representative values, so a vehicle may still be normal even if its value varies from those listed here. So do not decide whether a part is faulty or not solely according to the "Normal Condition" here.

(a) CARB mandated signals.

TOYOTA hand–held tester display	Measurement Item	Normal Condition*1
FUEL SYS #1	Fuel System Bank 1 OPEN: Air–fuel ratio feedback stopped CLOSED: Air–fuel ratio feedback operating	Idling after warming up: CLOSED
CALC LOAD	Calculator Load: Current intake air volume as a proportion of max. intake air volume	Idling: 19.7 ~ 50.4 % Racing without load (2,500rpm): 16.8 ~ 47.4 %
COOLANT TEMP.	Engine Coolant Temp. Sensor Value	After warming up: 80 ~ 95°C (176 ~ 203°F)
SHORT FT #1	Short–term Fuel Trim Bank 1	0 ± 20 %
LONG FT #1	Long–term Fuel Trim Bank 1	0 ± 20 %
ENGINE SPD	Engine Speed	Idling: 650 ~ 750 rpm
VEHICLE SPD	Vehicle Speed	Vehicle Stopped: 0 km/h (0 mph)
IGN ADVANCE	Ignition Advance: Ignition Timing of Cylinder No. 1	Idling: BTDC 0 ~ 10°
INTAKE AIR	Intake Air Temp. Sensor Value	Equivalent to Ambient Temp.
MAP	Absolute Pressure inside Intake Manifold	Idling: 20 ~ 51 kPa Racing without load (2,500 rpm): 17 ~ 48 kPa
THROTTLE POS	Voltage Output of Throttle Position Sensor Calculated as a percentage: 0 V → 0%, 5 V → 100 %	Throttle Fully Closed: 6 ~ 16 % Throttle Fully Open: 64 ~ 98 %
O2S B1, S1	Voltage Output of Heated Oxygen Sensor Bank 1 Sensor 1	Idling: 0.1 ~ 0.9 V (0.56 ~ 0.76 V *2)
O2FT B1, S1	Heated Oxygen Sensor Fuel Trim Bank 1 Sensor 1 (Same as SHORT FT #1)	0 ± 20 %
A/FS B1, S1 *3	Voltage Output of A/F Sensor	Idling: 2.8 ~ 3.8 V
A/FFT B1, S1 *3	A/F Sensor Fuel Trim (Same as SHORT FT #1)	0 ± 20 %
O2S B1, S2	Voltage Output of Heated Oxygen Sensor Bank 1 Sensor 2	Driving at 50 km/h (31 mph): 0.05 ~ 0.95 V

*1: If no conditions are specifically stated for "Idling", it means the shift lever is at N or P position, the A/C switch is OFF and all accessory switches are OFF.

*2: Only for California Specification vehicles, when you use the OBD II scan tool (excluding TOYOTA hand–held tester).

*3: Only for California Specification vehicles, when you use the TOYOTA hand–held tester.

(b) TOYOTA Enhanced Signals.

TOYOTA hand–held tester display	Measurement Item	Normal Condition*1
MISFIRE RPM	Engine RPM for first misfire range	Misfire 0: 0 rpm
MISFIRE LOAD	Engine load for first misfire range	Misfire 0: 0 g/r
INJECTOR	Fuel injection time for cylinder No.1	Idling: 2.9 ~ 5.1 ms
IAC DUTY RATIO	Intake Air Control Valve Duty Ratio Opening ratio rotary solenoid type IAC valve	Idling: 25 ~ 62 %
STARTER SIG	Starter Signal	Cranking: ON
CTP SIG	Closed Throttle Position Signal	Throttle fully closed: ON
A/C SIG	A/C Switch Signal	A/C ON: ON
PNP SIG	Park/Neutral Position Switch Signal	P or N position: ON
ELECTCL LOAD SIG	Electrical Load Signal	Defogger S/W ON: ON
STOP LIGHT SW	Stop Light Switch Signal	Stop light switch ON: ON
PS OIL PRESS SW	Power Steering Oil Pressure Switch Signal	Turn steering wheel: ON
FC IDL	Fuel Cut Idle: Fuel cut when throttle valve fully closed, during deceleration	Fuel cut operating: ON
FC TAU	Fuel Cut TAU: Fuel cut during very light load	Fuel cut operating: ON
CYL#1, CYL#2, CYL#3, CYL#4	Abnormal revolution variation for each cylinder	0 %
IGNITION	Total number of ignition for every 1,000 revolutions	0 ~ 2,000 rpm
EGR SYSTEM	EGR system operating condition	Idling: OFF
FUEL PUMP	Fuel Pump Signal	Idling: ON
A/C CUT SIG	A/C Cut Signal	A/C S/W OFF: ON
A/C MAG CLUTCH	A/C Switch Signal	A/C ON: ON
EVAP (PURGE) VSV	EVAP VSV Signal	VSV operating: Avove 30 %
VAPOR PRESS VSV	Vapor Pressure VSV Signal	VSV operating: ON
TOTAL FT B1	Total Fuel Trim Bank 1: Average value for fuel trim system of bank 1	Idling: 0.8 ~ 1.2 V
O2 LR B1, S1 *2	Heated Oxygen Sensor Lean Rich Bank 1 Sensor 1: Response time for oxygen sensor output to switch from lean to rich	Idling after warming up: 0 ~ 1,000 msec.
O2 RL B1, S1 *2	Heated Oxygen Sensor Rich Lean Bank 1 Sensor 1: Response time for oxygen sensor output to switch from rich to lean	Idling after warming up: 0 ~ 1,000 msec.

*1: If no conditions are specifically stated for ”Idling”, it means the shift lever is at N or P position, the A/C switch is OFF and all accessory switches are OFF.

*2: Except California Specification vehicles.

DI00I–09

DIAGNOSTIC TROUBLE CODE CHART

HINT:

Parameters listed in the chart may not be exactly the same as your reading due to the type of instrument or other factors.

If a malfunction code is displayed during the DTC check in check mode, check the circuit for that code listed in the table below. For details of each code, turn to the page referred to under the ”See Page ” for the respective ”DTC No.” in the DTC chart.

SAE Controlled:

DTC No. (See Page)	Detection Item	Trouble Area	MIL*1	Memory
P0105 (DI–29)	Manifold Absolute Pressure/Barometric Pressure Circuit Malfunction	□Open or short in manifold absolute pressure sensor circuit □Manifold absolute pressure sensor □ECM	○	○
P0106 (DI–33)	Manifold Absolute Pressure Circuit Range/Performance Problem	□Manifold absolute pressure sensor □Vacuum line	○	○
P0110 (DI–35)	Intake Air Temp. Circuit Malfunction	□Open or short in intake air temp. sensor circuit □Intake air temp. sensor (built into mass air flow meter) □ECM	○	○
P0115 (DI–41)	Engine Coolant Temp. Circuit Malfunction	□Open or short in engine coolant temp. sensor circuit □Engine coolant temp. sensor □ECM	○	○
P0116 (DI–47)	Engine Coolant Temp. Circuit Range/Performance Problem	□Engine coolant temp. sensor □Cooling system	○	○
P0120 (DI–49)	Throttle/Pedal Position Sensor/Switch ”A” Circuit Malfunction	□Open or short in throttle position sensor circuit □Throttle position sensor □ECM	○	○
P0121 (DI–54)	Throttle/Pedal Position Sensor/Switch ”A” Circuit Range/Performance Problem	□Throttle position sensor	○	○
*2 P0125 (DI–61)	Insufficient Coolant Temp. for Closed Loop Fuel Control (Except California Spec.)	□Open or short in heated oxygen sensor (bank 1 sensor 1) circuit □Heated oxygen sensor (bank 1 sensor 1) □ECM	○	○
*3 P0125 (DI–55)	Insufficient Coolant Temp. for Closed Loop Fuel Control (Only for California Spec.)	□Open or short in A/F sensor circuit □A/F sensor □ECM	○	○
*2 P0130 (DI–66)	Heated Oxygen Sensor Circuit Malfunction (Bank 1 Sensor 1)	□Heated oxygen sensor □Fuel trim malfunction	○	○
*2 P0133 (DI–71)	Heated Oxygen Sensor Circuit Slow Response (Bank 1 Sensor 1)	□Heated oxygen sensor □Fuel trim malfunction	○	○
*2 P0135 (DI–75)	Heated Oxygen Sensor Heater Circuit Malfunction (Bank 1 Sensor 1)	□Open or short in heater circuit of heated oxygen sensor □Heated oxygen sensor heater □ECM	○	○

*1: ○ ~~~MIL lights up

*2: Except California specification vehicles

*3: Only for California specification vehicles

DTC No. (See Page)	Detection Item	Trouble Area	MIL*1	Memory
P0136 (DI–77)	Heated Oxygen Sensor Circuit Malfunction (Bank 1 Sensor 2)	□Heated oxygen sensor	○	○
P0141 (DI–75)	Heated Oxygen Sensor Heater Circuit Malfunction (Bank 1 Sensor 2)	□Same as DTC P0135	○	○
*3 P0171 (DI–84)	System too Lean (Fuel Trim) (Except California Spec.)	□Air intake (hose loose) □Fuel line pressure □Injector blockage □Heated oxygen sensor (bank 1 sensor 1) □Manifold absolute pressure sensor □Engine coolant temp. sensor	○*1	○
*3 P0172 (DI–84)	System too Rich (Fuel Trim) (Except California Spec.)	□Fuel line pressure □Injector leak, blockage □Heated oxygen sensor (bank 1 sensor 1) □Manifold absolute pressure sensor □Engine coolant temp. sensor	○*1	○
*4 P0171 (DI–79)	System too Lean (Fuel Trim) (Only for California Spec.)	□Air intake (hose loose) □Fuel line pressure □Injector blockage □Manifold absolute pressure sensor □Engine coolant temp. sensor □A/F sensor	○*1	○
*4 P0172 (DI–79)	System too Rich (Fuel Trim) (Only for California Spec.)	□Fuel line pressure □Injector leak, blockage □Manifold absolute pressure sensor □Engine coolant temp. sensor □A/F sensor	○*1	○
P0300 (DI–89)	Random/Multiple Cylinder Misfire Detected	□Ignition system □Injector □Fuel line pressure □EGR □Compression pressure □Valve clearance not to specification □Valve timing □Manifold absolute pressure sensor □Engine coolant temp. sensor □Open or short engine wire □Connector connection □ECM	○*2	○
P0301 P0302 P0303 P0304 (DI–89)	Misfire Detected – Cylinder 1 – Cylinder 2 – Cylinder 3 – Cylinder 4			
P0325 (DI–97)	Knock Sensor 1 Circuit Malfunction	□Open or short in knock sensor 1 circuit □Knock sensor 1 (looseness) □ECM	○*1	○
P0335 (DI–100)	Crankshaft Position Sensor ”A” Circuit Malfunction	□Open or short in crankshaft position sensor circuit □Crankshaft position sensor □Starter □ECM	○*1	○

*1: MIL lights up
*2: MIL lights up or blinking
*3: Except California Specification vehicles
*4: Only for California Specification vehicles

DTC No. (See Page)	Detection Item	Trouble Area	MIL*1	Memory
P0340 (DI–103)	Camshaft Position Sensor Circuit Malfunction	□Open or short in camshaft position sensor circuit □Camshaft position sensor □Distributor □Starter □ECM	○	○
P0401 (DI–105)	Exhaust Gas Recirculation Flow Insufficient Detected	□EGR valve stuck closed □Open or short in VSV circuit for EGR □Vacuum or EGR hose disconnected □Manifold absolute pressure sensor □EGR VSV open or close malfunction □ECM	○	○
P0402 (DI–113)	Exhaust Gas Recirculation Flow Excessive Detected	□EGR valve stuck open □Vacuum or EGR hose is connected to wrong post □Manifold absolute pressure sensor □ECM	○	○
*2 P0420 (DI–116)	Catalyst System Efficiency Below Threshold (Except California Spec.)	□Three–way catalytic converter □Open or short in heated oxygen sensor circuit □Heated oxygen sensor	○	○
*3 P0420 (DI–119)	Catalyst System Efficiency Below Threshold (Only for California Spec.)	□Three–way catalytic converter □Open short in heated oxygen sensor (bank 1 sensor 2) circuit □Heated oxygen sensor (bank 1 sensor 2) □Open or short in A/F sensor circuit □A/F sensor	○	○
P0440 (DI–122)	Evaporative Emission Control System Malfunction	□Vapor pressure sensor □Fuel tank cap incorrectly installed □Fuel tank cap cracked or damaged □Vacuum hose cracked, holed, blocked, damaged or disconnected ((1) or (2) in fig. 1) □Hose or tube cracked, holed, damaged or loose seal ((3) in fig. 1) □Fuel tank cracked, holed or damaged □Charcoal canister cracked, holed or damaged □Fuel tank over fill check valve cracked or damaged	○	○
P0441 (DI–129)	Evaporative Emission Control System Incorrect Purge Flow	□Open or short in VSV circuit for vapor pressure sensor □VSV for vapor pressure sensor □Open or short in vapor pressure sensor circuit □Vapor pressure sensor □Open or short in VSV circuit for EVAP □VSV for EVAP □Vacuum hose cracks, hole, blocked, damaged or disconnected ((1), (4), (5) holed (6) and (7) in fig. 1) □Charcoal canister cracked, holed or damaged □Fuel tank over fill check valve cracked or damaged	○	○
P0446 (DI–129)	Evaporative Emission Control System Vent Control Malfunction		○	○
P0450 (DI–142)	Evaporative Emission Control System Pressure Sensor Malfunction	□Open or short in vapor pressure sensor circuit □Vapor pressure sensor □ECM	○	○
P0451 (DI–142)	Evaporative Emission Control System Pressure Sensor (Range/performance)		○	○

*1: ○ ~~~MIL lights up
*2: Except California Specification vehicles
*3: Only for California Specification vehicles

DTC No. (See Page)	Detection Item	Trouble Area	MIL*1	Memory
P0500 (DI–145)	Vehicle Speed Sensor Malfunction	□Combination meter □Open or short in No.1 vehicle speed sensor circuit □No.1 vehicle speed sensor □ECM	○	○
P0505 (DI–148)	Idle Control System Malfunction	□IAC valve is stuck or closed □Open or short in IAC valve circuit □Open or short in A/C switch circuit □Air intake (hose loose) □ECM	○	○

*1: ○ ~~~MIL lights up

2. MANUFACTURER CONTROLLED

DTC No. (See Page)	Detection Item	Trouble Area	MIL*1	Memory
*2 P1130 (DI–152)	A/F Sensor Circuit Range/Performance Malfunction	□Open or short in A/F sensor circuit □A/F sensor □ECM	○	○
*2 P1133 (DI–157)	A/F Sensor Circuit Response Malfunction	□A/F sensor	○	○
*2 P1135 (DI–161)	A/F Sensor Heater Circuit Malfunction	□Open or short in heater circuit of A/F sensor □A/F sensor heater □ECM	○	○
P1300 (DI–163)	Igniter Circuit Malfunction (No.1)	□Open or short in IGF or IGT circuit from igniter to ECM □Ignition coil (No.1) □ECM	○	○
P1310 (DI–163)	Igniter Circuit Malfunction (No.2)	□Open or short in IGF or IGT circuit from igniter to ECM □Ignition coil (No.2) □ECM	○	○
P1335 (DI–169)	Crankshaft Position Sensor Circuit Malfunction (During engine running)	□Open short in crankshaft position sensor circuit □Crankshaft position sensor □ECM	–	○
*3 P1520 (DI–170)	Stop Light Switch Signal Malfunction	□Short in stop light switch signal circuit □Stop light switch □ECM	○	○
P1600 (DI–173)	ECM BATT Malfunction	□Open in back up power source circuit □ECM	○	○
*3 P1780 (DI–175)	Park/Neutral Position Switch Malfunction	□Short in park/neutral position switch circuit □Park/neutral position switch □ECM	○	○

*1: ○ ~~~MIL lights up
*2: Only for California Specification vehicles
*3: Only for A/T models

DTC No. (See Page)	Detection Item	Trouble Area	MIL*1	Memory
*2 B2795 (DI–928)	Unmatched key Code	□Immobiliser system	–	○
*2 B2796 (DI–929)	No Communnication in Immobiliser system	□Immobiliser system	–	○
*2 B2797 (DI–932)	Communication Malfunction No.1	□Immobiliser system	–	○
*2 B2798 (DI–935)	Communication Malfunction No.2	□Immobiliser system	–	○

*1: –~~~MIL does not light up

*2: Only for w/ engine immobiliser system models

DI1JS–03

PARTS LOCATION

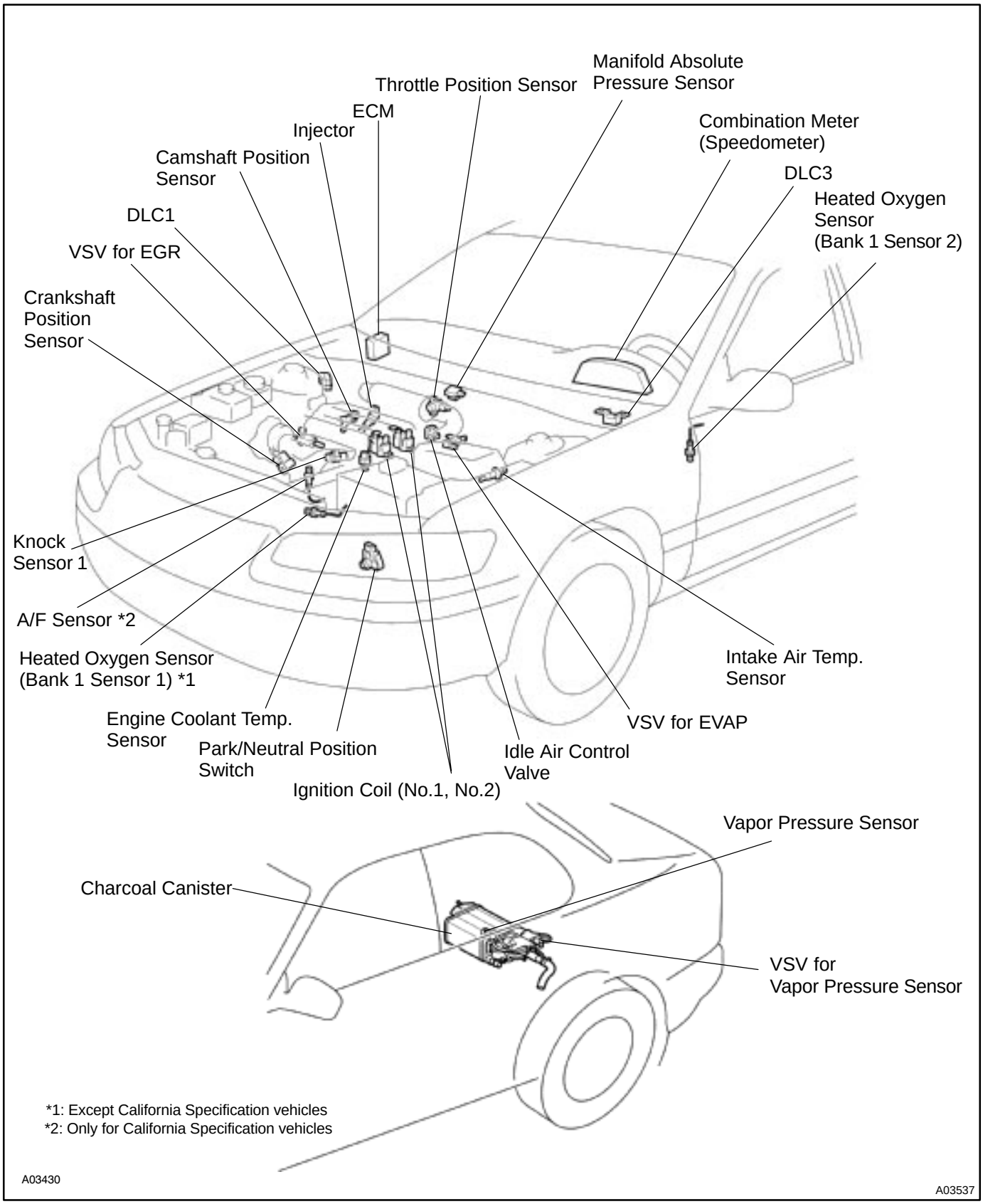

DI1JT–03

TERMINALS OF ECM

Without engine immobiliser system

ECM Terminals

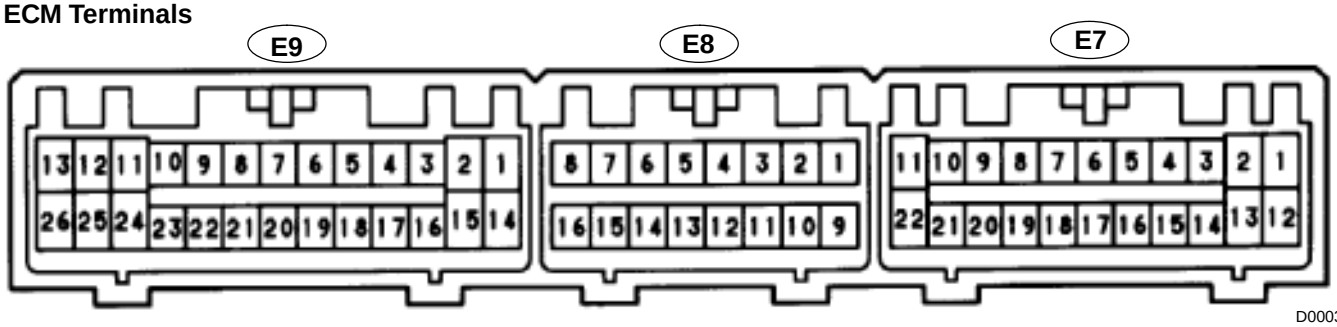

Symbols (Terminals No.)	Wiring Color	Condition	STD Voltage (V)
BATT (E7 – 1) – E1 (E9 – 14)	B – Y ↔ BR	Always	9 ~ 14
+ B (E7 – 12) – E1 (E9 – 14)	B – Y ↔ BR	IG switch ON	9 ~ 14
VC (E8 – 1) – E2 (E8 – 9)	Y ↔ BR	IG switch ON	4.5 ~ 5.5
VTA (E8 – 11) – E2 (E8 – 9)	LG ↔ BR	IG switch ON Throttle valve fully closed	0.3 ~ 1.0
		IG switch ON Throttle valve fully open	3.2 ~ 4.9
PIM (E8 – 2) – E2 (E8 – 9)	B – Y ↔ BR	IG switch ON	3.3 ~ 3.9
		Apply vacuum 26.7 kPa (200 mmHg, 7.9 in.Hg)	2.5 ~ 3.1
THA (E8 – 3) – E2 (E8 – 9)	Y – B ↔ BR	Idling, Intake air temp. 20˚C (68˚ F)	0.5 ~ 3.4
THW (E8 – 4) – E2 (E8 – 9)	G – B ↔ BR	Idling, Engine coolant temp. 80˚C (176˚F)	0.2 ~ 1.0
STA (E7 – 11) – E1 (E9 – 14)	*1 GR ↔ BR	Cranking	6.0 or more
	*2 B – O ↔ BR	Cranking	6.0 or more
#10 (E9 – 12) – E01 (E9 – 13)	L ↔ BR	IG switch ON	9 ~ 14
		Idling	Pulse generation (See page DI–89)
#20 (E9 – 11) – E01 (E9 – 13)	R ↔ BR	IG switch ON	9 ~ 14
		Idling	Pulse generation (See page DI–89)
#30 (E9 – 25) – E01 (E9 – 13)	Y ↔ BR	IG switch ON	9 ~ 14
		Idling	Pulse generation (See page DI–89)
#40 (E9 – 24) – E01 (E9 – 13)	W ↔ BR	IG switch ON	9 ~ 14
		Idling	Pulse generation (See page DI–89)
IGT1 (E9 – 20) – E1 (E9 – 14)	B ↔ BR	Idling	Pulse generation (See page DI–163)
IGT2 (E9 – 19) – E1 (E9 – 14)	Y – R ↔ BR	Idling	Pulse generation (See page DI–163)
IGF (E9 – 3) – E1 (E9 – 14)	W – R ↔ BR	IG switch ON, Disconnect ignition coil connector	4.5 ~ 5.5
		Idling	Pulse generation (See page DI–163)

*1: TMC made

*2: TMMK made

Symbols (Terminals No.)	Wiring Color	Condition	STD Voltage (V)
G∼(E9 – 5) – NE>(E9 – 17)	B – W ↔ L	Idling	Pulse generation (See page DI–100)
NE∼(E9 – 4) – NE>(E9 – 17)	B – R ↔ L	Idling	Pulse generation (See page DI–100)
FC (E7 – 14) – E01 (E9 – 13)	G – R ↔ BR	IG switch ON	9 ~ 14
EGR (E9 – 23) – E01(E9 – 13)	P – B ↔ BR	IG switch ON	0 ~ 3
ISCC (E9 – 9) – E01 (E9 – 13)	B – O ↔ BR	IG switch ON Disconnect E9 connector of ECM	9 ~ 4
ISCO (E9 –10) – E01(E9 – 13)	W ↔ BR	IG switch ON Disconnect E9 connector of ECM	Below 3.0
*1 OX1 (E8 – 6) – E1 (E9 – 14)	W ↔ BR	Maintain engine speed at 2,500 rpm for 2 min. after warming up	Pulse generation (See page DI–66)
OX2 (E8 – 5) – E1 (E9 – 14)	B ↔ BR	Maintain engine speed at 2,500 rpm for 2 min. after warming up	Pulse generation
*1 HT1 (E9 – 8) – E1 (E9 – 14)	L – Y ↔ BR	Idling	Below 3.0
		IG switch ON	9 ~ 14
HT2 (E9 – 21) – E1 (E9 – 14)	P – B ↔ BR	Idling	Below 3.0
		IG switch ON	9 ~ 14
KNK (E8 – 13) – E1 (E9 – 14)	W ↔ BR	Idling	Pulse generation (See page DI–97)
*3 NSW (E7 – 22) – E1 (E9 – 14)	B – W ↔ BR	IG switch ON Other shift position in P or N position	9 ~ 14
		IG switch ON Shift position in P or N position	0 ~ 3.0
SPD (E7 – 9) – E1 (E9 – 14)	V – W ↔ BR	IG switch ON Rotate driving wheel slowly	Pulse generation (See page DI–145)
TE1 (E8 – 15) – E1 (E9 – 14)	L – W ↔ BR	IG switch ON	9 ~ 14
W (E7 – 5) – E1 (E9 – 14)	G – R ↔ BR	Idling	9 ~ 14
		IG switch ON	Below 3.0
EVP (E9 – 22) – E1 (E9 – 14)	V – W ↔ BR	IG switch ON	9 ~ 14
TPC (E8 – 8) – E1 (E9 – 14)	V ↔ BR	IG switch ON	9 ~ 14
PTNK (E8 – 7) – E2 (E8 – 9)	P ↔ BR	IG switch ON, Disconnect vacuum hose from vapor pressure sensor	2.9 ~ 3.7
		Apply vacuum (less than 66.7 kPa (500 mmHg, 19.7 in.Hg))	Below 0.5
*2 AF∼ (E8 – 6) – E1 (E9 – 14)	W ↔ BR	Always (IG switch ON)	3.3 fixed*4
*2 AF> (E8 – 14) – E1 (E9 – 14)	O ↔ BR	Always (IG switch ON)	3.0 fixed*4

*1: Except California Specification vehicles
*2: Only for California Specification vehicles
*3: Only for A/T models
*4: The ECM terminal voltage is fixed regardless of the output voltage from the sensor.

Symbols (Terminals No.)	Wiring Color	Condition	STD Voltage (V)
*1 HTAF (E9 – 2) – E04 (E9 – 15)	G ↔ BR	Idling	Below 3.0
		IG switch ON	9 ~ 14
LOCK IN (E9 – 18) – E1 (E9 – 14)	W – L ↔ BR	A/C compressor is operating	Pulse generation (See page DI–190)
LOCK (E7 – 15) – E1(E9 – 14)	R – W ↔ BR	A/C indicator light lights up	Below 4.0
		A/C indicator light does not lights up	Below 1.0
A/C SW (E7 – 10) – E1 (E9 – 14)	R – B ↔ BR	A/C switch ON	9 ~ 14
		A/C switch OFF	Below 1.0
PRS (E7 – 13) – E1 (E9 – 14)	G ↔ BR	A/C pressure is normally	Below 1.0
THR (E8 – 10) – E2 (E8 – 9)	L – R ↔ BR	IG switch ON, A/C evaporator temp. 0˚C (32˚F)	2.2 ~ 2.6
		IG switch ON, A/C evaporator temp. 15˚C (59˚F)	1.4 ~ 1.8
MGC (E7 – 21) – E01(E9 – 14)	L – Y ↔ BR	A/C magnetic clutch ON	Below 1.0
		A/C magnetic clutch OFF	9 ~ 14
* STP (E7 – 4) – E1 (E9 – 14)	G – W ↔ BR	IG switch ON, Brake pedal depressed	7.5 ~ 14
		IG switch ON, Brake pedal released	Below 1.5
ELS (E7 – 2) – E1 (E9 – 14)	B – R ↔ BR	Defogger switch and taillight switch ON	7.5 ~ 14
		Defogger switch and taillight switch OFF	Below 1.5
PSSW (E8 – 12) – E1 (E9 – 14)	B – L ↔ BR	IG switch ON	9 ~ 14
		At idling, Turn steering wheel to lock position	Below 3.0
SIL (E7 – 16) – E1 (E9 – 14)	W ↔ BR	During transmission	Pulse generation

*: Only for A/T models
*1: Only for California Specification vehicles

With engine immobiliser system

ECM Terminals

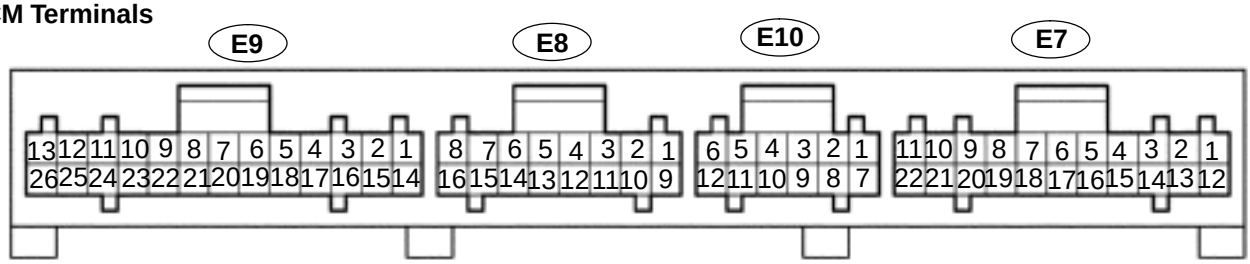

A02958

Symbols (Terminals No.)	Wiring Color	Condition	STD Voltage (V)
BATT (E7 – 2) – E1 (E9 – 24)	B – Y ↔ BR	Always	9 ~ 14
+ B (E7 – 12) – E1 (E9 – 24)	B – Y ↔ BR	IG switch ON	9 ~ 14
VC (E8 – 1) – E2 (E8 – 9)	Y ↔ BR	IG switch ON	4.5 ~ 5.5
VTA (E8 – 10) – E2 (E8 – 9)	LG ↔ BR	IG switch ON Throttle valve fully closed	0.3 ~ 1.0
		IG switch ON Throttle valve fully open	3.2 ~ 4.9
PIM (E8 – 2) – E2 (E8 – 9)	B – Y ↔ BR	IG switch ON	3.3 ~ 3.9
		Apply vacuum 26.7 kPa (200 mmHg, 7.9 in.Hg)	2.5 ~ 3.1
THA (E8 – 3) – E2 (E8 – 9)	Y – B ↔ BR	Idling, Intake air temp. 20˚C (68˚ F)	0.5 ~ 3.4
THW (E8 – 4) – E2 (E8 – 9)	G – B ↔ BR	Idling, Engine coolant temp. 80˚C (176˚F)	0.2 ~ 1.0
STA (E7 – 11) – E1 (E9 – 24)	*1 GR ↔ BR	Cranking	6.0 or more
	*2 B – O ↔ BR	Cranking	6.0 or more
#10 (E9 – 12) – E01 (E9 – 13)	L ↔ BR	IG switch ON	9 ~ 14
		Idling	Pulse generation (See page DI–89)
#20 (E9 – 11) – E01 (E9 – 13)	R ↔ BR	IG switch ON	9 ~ 14
		Idling	Pulse generation (See page DI–89)
#30 (E9 – 10) – E01 (E9 – 13)	Y ↔ BR	IG switch ON	9 ~ 14
		Idling	Pulse generation (See page DI–89)
#40 (E9 – 9) – E01 (E9 – 13)	W ↔ BR	IG switch ON	9 ~ 14
		Idling	Pulse generation (See page DI–89)
IGT1 (E9 – 23) – E1 (E9 – 24)	B ↔ BR	Idling	Pulse generation (See page DI–163)
IGT2 (E9 – 22) – E1 (E9 – 24)	Y – R ↔ BR	Idling	Pulse generation (See page DI–163)
IGF (E9 – 17) – E1 (E9 – 24)	W – R ↔ BR	IG switch ON, Disconnect ignition coil connector	4.5 ~ 5.5
		Idling	Pulse generation (See page DI–163)

*1: TMC made
*2: TMMK made

Symbols (Terminals No.)	Wiring Color	Condition	STD Voltage (V)
G∼(E10 – 11) – NE>(E10 – 6)	B – W ↔ L	Idling	Pulse generation (See page DI–100)
NE∼(E10 – 12) – NE>(E10 – 6)	B – R ↔ L	Idling	Pulse generation (See page DI–100)
FC (E7 – 14) – E01 (E9 – 13)	G – R ↔ BR	IG switch ON	9 ~ 14
EGR (E8 – 15) – E01(E9 – 13)	P – B ↔ BR	IG switch ON	0 ~ 3
ISCC (E9 – 6) – E01 (E9 – 13)	B – O ↔ BR	IG switch ON Disconnect E9 connector of ECM	9 ~ 4
ISCO (E9 –7) – E01(E9 – 13)	W ↔ BR	IG switch ON Disconnect E9 connector of ECM	Below 3.0
*1 OX1 (E8 – 5) – E1 (E9 – 24)	W ↔ BR	Maintain engine speed at 2,500 rpm for 2 min. after warming up	Pulse generation (See page DI–66)
OX2 (E8 – 13) – E1 (E9 – 24)	B ↔ BR	Maintain engine speed at 2,500 rpm for 2 min. after warming up	Pulse generation
*1 HT1 (E9 – 1) – E1 (E9 – 24)	L – Y ↔ BR	Idling	Below 3.0
		IG switch ON	9 ~ 14
HT2 (E9 – 14) – E1 (E9 – 24)	P – B ↔ BR	Idling	Below 3.0
		IG switch ON	9 ~ 14
KNK (E8 – 12) – E1 (E9 – 24)	W ↔ BR	Idling	Pulse generation (See page DI–97)
*3 NSW (E7 – 22) – E1 (E9 – 24)	B – W ↔ BR	IG switch ON Other shift position in P or N position	9 ~ 14
		IG switch ON Shift position in P or N position	0 ~ 3.0
SPD (E7 – 8) – E1 (E9 – 24)	V – W ↔ BR	IG switch ON Rotate driving wheel slowly	Pulse generation (See page DI–145)
TE1 (E8 – 7) – E1 (E9 – 24)	L – W ↔ BR	IG switch ON	9 ~ 14
W (E7 – 4) – E1 (E9 – 24)	G – R ↔ BR	Idling	9 ~ 14
		IG switch ON	Below 3.0
EVP (E9 – 3) – E1 (E9 – 24)	V – W ↔ BR	IG switch ON	9 ~ 14
TPC (E8 – 16) – E1 (E9 – 24)	V ↔ BR	IG switch ON	9 ~ 14
PTNK (E8 – 8) – E2 (E8 – 9)	P ↔ BR	IG switch ON, Disconnect vacuum hose from vapor pressure sensor	2.9 ~ 3.7
		Apply vacuum (less than 66.7 kPa (500 mmHg, 19.7 in.Hg))	Below 0.5
*2 AF∼ (E8 – 6) – E1 (E9 – 24)	W ↔ BR	Always (IG switch ON)	3.3 fixed*4
*2 AF> (E8 – 14) – E1 (E9 – 24)	O ↔ BR	Always (IG switch ON)	3.0 fixed*4

*1: Except California Specification vehicles
*2: Only for California Specification vehicles
*3: Only for A/T models
*4: The ECM terminal voltage is fixed regardless of the output voltage from the sensor.

Symbols (Terminals No.)	Wiring Color	Condition	STD Voltage (V)
*1 HTAF (E9 – 2) – E04 (E9 – 15)	G ↔ BR	Idling	Below 3.0
		IG switch ON	9 ~ 14
LOCK IN (E9 – 19) – E1 (E9 – 24)	W – L ↔ BR	A/C compressor is operating	Pulse generation (See page DI–190)
LOCK (E7 – 20) – E1 (E9 – 24)	R – W ↔ BR	A/C indicator light lights up	Below 4.0
		A/C indicator light does not lights up	Below 1.0
A/C SW (E7 – 10) – E1 (E9 – 24)	R – B ↔ BR	A/C switch ON	9 ~ 14
		A/C switch OFF	Below 1.0
PRS (E7 – 19) – E1 (E9 – 24)	G ↔ BR	A/C pressure is normally	Below 1.0
THR (E8 – 11) – E2 (E8 – 9)	L – R ↔ BR	IG switch ON, A/C evaporator temp. 0˚C (32˚F)	2.2 ~ 2.6
		IG switch ON, A/C evaporator temp. 15˚C (59˚F)	1.4 ~ 1.8
MGC (E7 – 21) – E01 (E9 – 13)	L – Y ↔ BR	A/C magnetic clutch ON	Below 1.0
		A/C magnetic clutch OFF	9 ~ 14
* STP (E7 – 9) – E1 (E9 – 24)	G – W ↔ BR	IG switch ON, Brake pedal depressed	7.5 ~ 14
		IG switch ON, Brake pedal released	Below 1.5
ELS (E7 – 13) – E1 (E9 – 24)	B – R ↔ BR	Defogger switch and taillight switch ON	7.5 ~ 14
		Defogger switch and taillight switch OFF	Below 1.5
PSSW (E9 – 4) – E1 (E9 – 24)	B – L ↔ BR	IG switch ON	9 ~ 14
		At idling, Turn steering wheel to lock position	Below 3.0
SIL (E7 – 6) – E1 (E9 – 24)	W ↔ BR	During transmission	Pulse generation
TACH (E7 – 7) – E1 (E9 – 24)	B – O ↔ BR	Idling	Pulse generation
KSW (E10 – 4) – E1 (E9 – 24)	L – B ↔ BR	At the time of inserting key	Below 1.5
		In the condition without key inserted	Pulse generation
RXCK (E10 – 3) – E1 (E9 – 24)	R – L ↔ BR	At the time of inserting key	Pulse generation
CODE (E10 – 8) – E1 (E9 – 24)	G – W ↔ BR	At the time of inserting key	Pulse generation
TXCT (E10 – 1) – E1 (E9 – 24)	L – Y ↔ BR	At the time of inserting key	Pulse generation
IMLD (E10 – 1) – E1 (E9 – 24)	R – Y ↔ BR	In the condition without key inserted	Pulse generation
MREL (E10 – 7) – E1 (E9 – 24)	B – W ↔ BR	IG switch ON	9 ~ 14
IGSW (E7 – 1) – E1 (E9 – 24)	B – R ↔ BR	IG switch ON	9 ~ 14

*: Only for A/T models

*1: Only for California Specification vehicles

DI00L–03

PROBLEM SYMPTOMS TABLE

Symptom	Suspect Area	See page
Engine does not crank (Does not start)	1. Starter 2. starter relay	ST–2 ST–20
No initial combustion (Does not start)	1. ECM power source circuit 2. Fuel pump control circuit 3. Engine control module (ECM)	DI–179 DI–183 IN–31
No complete combustion (Does not start)	1. Fuel pump control circuit	DI–183
Engine cranks normally (Difficult to start)	1. Starter signal circuit 2. Fuel pump control circuit 3. Compression	DI–176 DI–183 EM–3
Cold engine (Difficult to start)	1. Starter signal circuit 2. Fuel pump control circuit	DI–176 DI–183
Hot engine (Difficult to start)	1. Starter signal circuit 2. Fuel pump control circuit	DI–176 DI–183
High engine idle speed (Poor idling)	1. A/C switch circuit 2. ECM power source circuit	AC–84 DI–179
Low engine idle speed (Poor idling)	1. A/C switch circuit 2. Fuel pump control circuit	AC–84 DI–183
Rough idling (Poor idling)	1. Compression 2. Fuel pump control circuit	EM–3 DI–183
Hunting (Poor idling)	1. ECM power source circuit 2. Fuel pump control circuit	DI–179 DI–183
Hesitation/Poor acceleration (Poor driveability)	1. Fuel pump control circuit 2. A/T faulty	DI–183 DI–405
Surging (Poor driveability)	1. Fuel pump control circuit	DI–183
Soon after starting (Engine stall)	1. Fuel pump control circuit	DI–183
During A/C operation (Engine stall)	1. A/C switch circuit 2. Engine control module (ECM)	AC–84 IN–31
A/C switch indicatior blinking	1. A/C Compressor lock sensor circuit 2. A/C Evaporator temp. sensor circuit	DI–190 DI–192
Unable to refuel/ Difficult to refuel	1. ORVR system	EC–6

DI00M–05

CIRCUIT INSPECTION

DTC	P0105	Manifold Absolute Pressure/Barometric Pressure Circuit Malfunction

CIRCUIT DESCRIPTION

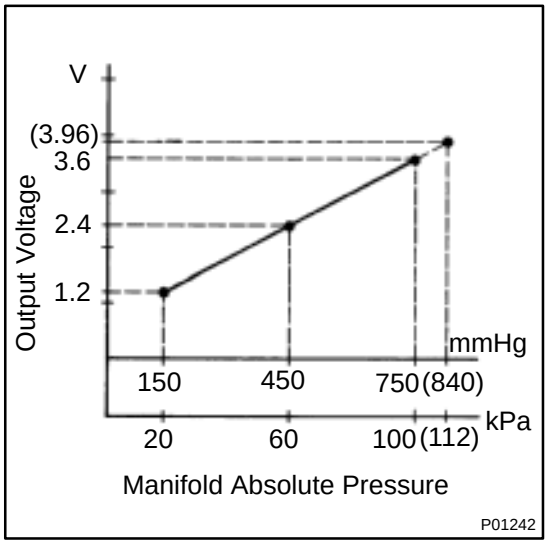

By a built–in sensor unit, the manifold absolute pressure sensor detects the intake manifold pressure as a voltage. The ECM then determines the basic injection duration and basic injection advance angle based on this voltage. Since the manifold absolute pressure sensor does not use the atmospheric pressure as a criterion, but senses the absolute pressure inside the intake manifold (the pressure in proportion to the present absolute vacuum 0), it is not influenced by fluctuations in the atmospheric pressure due to high altitude and other factors. This permits it to control the air–fuel ratio at the proper lever under all conditions.

DTC No.	DTC Detecting Condition	Trouble Area
P0105	Open or short in manifold absolute pressure sensor circuit	●Open or short in manifold absolute pressure sensor circuit ●Manifold absolute pressure sensor ●ECM

HINT:

After confirming DTC P0105, use the OBD II scan tool or TOYOTA hand–held tester to confirm the manifold absolute pressure from the CURRENT DATA.

Manifold Absolute Pressure (kPa)	Malfunction
Approx. 0	●PIM circuit short
130 or more	●VC circuit open or short ●PIM circuit open ●E2 circuit open

WIRING DIAGRAM

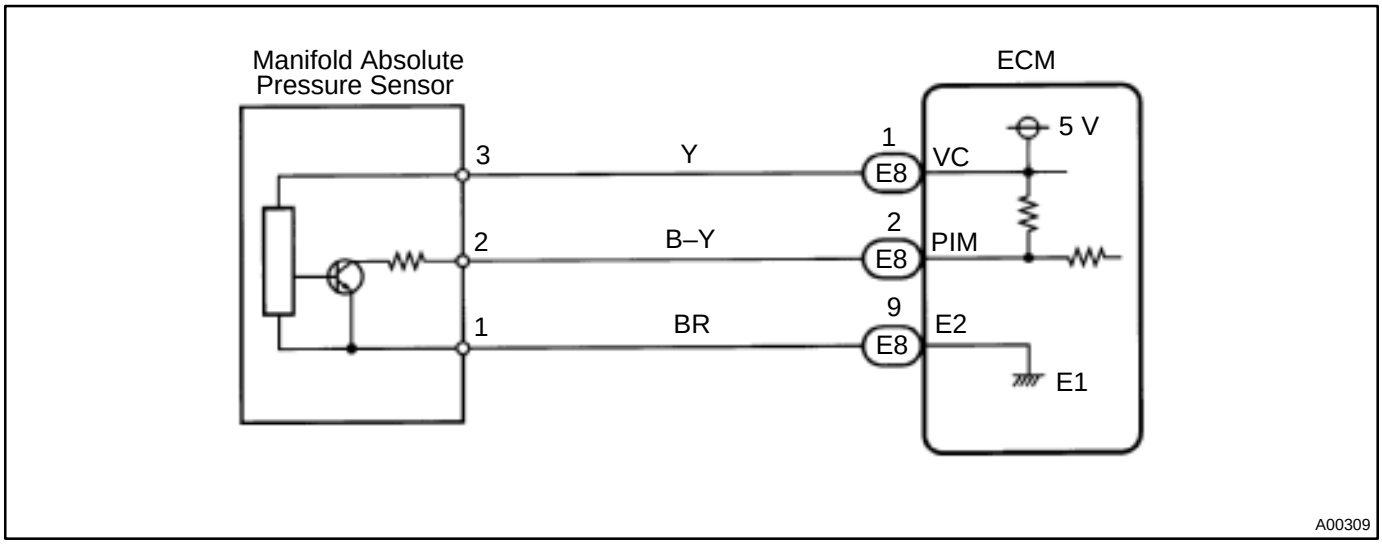

INSPECTION PROCEDURE

HINT:

- If DTC P0105 (Manifold Absolute Pressure/Barometric Pressure Circuit Malfunction), P0106 (Manifold Absolute Pressure /Barometric Pressure Circuit Range/Performance Problem) and P0110 (Intake Air Temp. Circuit Malfunction), P0115 (Engine Coolant Temp. Circuit Malfunction), P0120 (Throttle/Pedal Position Sensor/Switch ”A” Circuit Malfunction) are output simultaneously, E2 (sensor ground) may be open.
- Read freeze frame data using TOYOTA hand–held tester or OBD II scan tool. Because freeze frame records the engine conditions when the malfunction is detected, when troubleshooting it is useful for determining whether the vehicle was running or stopped, the engine warmed up or not, the air–fuel ratio lean or rich, etc. at the time of the malfunction.

1	**Connect OBD II scan tool or TOYOTA hand–held tester, and read value of manifold absolute pressure.**

PREPARATION:

(a) Connect the OBD II scan tool or TOYOTA hand–held tester to the DLC3.

(b) Turn the ignition switch ON and push the OBD II scan tool or TOYOTA hand–held tester main switch ON.

CHECK:

Read value of the manifold absolute pressure on the OBD II scan tool or TOYOTA hand–held tester.

OK:

Same as atmospheric pressure.

OK → **Check for intermittent problems (See page DI–3).**

NG

2	**Check voltage between terminals VC and E2 of ECM connector.**

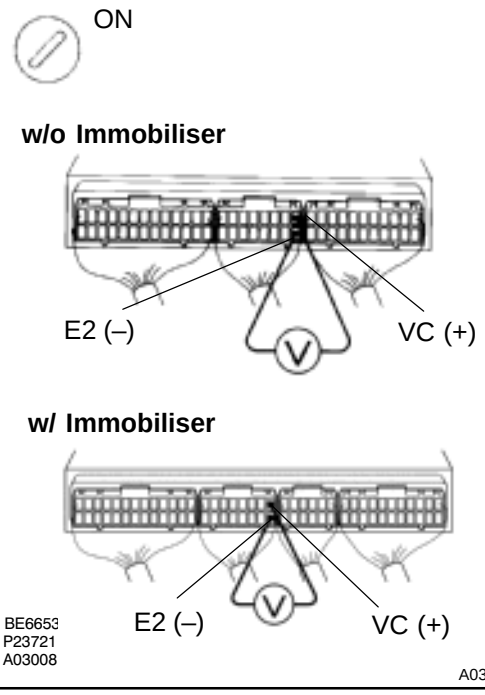

PREPARATION:

(a) Remove the glove compartment (See page SF–64).

(b) Turn the ignition switch ON.

CHECK:

Measure voltage between terminals VC and E2 of the ECM connector.

OK:

Voltage: 4.5 – 5.5 V

NG → **Check and replace ECM (See page IN–31).**

OK

3	Check voltage between terminals PIM and E2 of ECM connector.

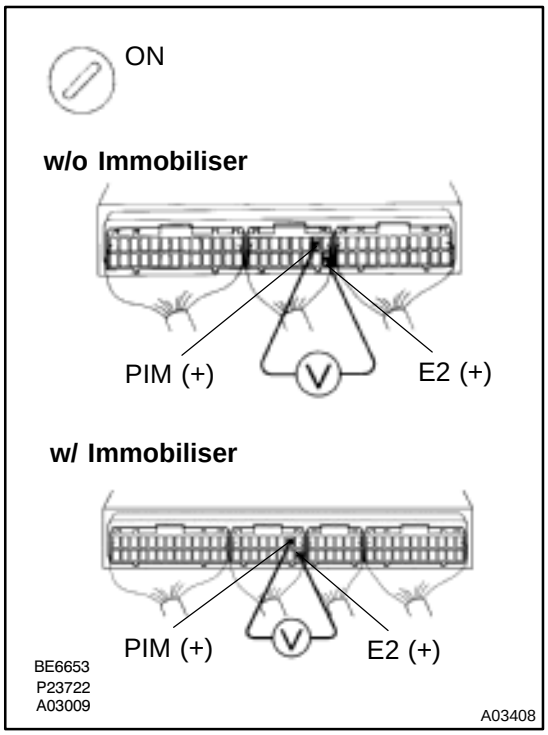

PREPARATION:

(a) Remove the glove compartment (See page SF–64).

(b) Turn the ignition switch ON.

CHECK:

Measure voltage between terminals PIM and E2 of the ECM connector.

OK:

Voltage: 3.3 – 3.9 V

OK	Check and replace ECM (See page IN–31).

NG

4	Check for open and short in harness and connector between manifold absolute pressure sensor and ECM.

NG	Repair or replace harness or connector.

OK

Replace manifold absolute pressure sensor (See page SF–52).

DI00N–04

DTC	P0106	Manifold Absolute Pressure Circuit Range/Performance Problem

CIRCUIT DESCRIPTION

Refer to DTC P0105 (Manifold Absolute Pressure/Barometric Pressure Circuit Malfunction) on page DI–29.

DTC No.	DTC Detecting Condition	Trouble Area
P0106	After engine is warmed up, conditions (a) and (b) continue with engine speed 400 ~ 1,000 rpm (2 trip detection logic) (a) Throttle valve fully closed (b) Manifold absolute pressure sensor output > 3.0 V	●Manifold absolute pressure sensor ●Vacuum line
	Condition (c) and (d) continue with engine speed 2,500 rpm or less (2 trip detection logic) (c) VTA > 1.85 (d) Manifold absolute pressure sensor output < 1.0 V	

WIRING DIAGRAM

Refer to DTC P0105 (Manifold Absolute Pressure/Barometric Pressure Circuit Malfunction) on page DI–29.

INSPECTION PROCEDURE

HINT:

- If DTC P0105 (Manifold Absolute Pressure/Barometric Pressure Circuit Malfunction) and P0106 (Manifold Absolute Pressure /Barometric Pressure Circuit Range/Performance Problem) are output simultaneously, manifold absolute pressure sensor circuit may be open. Perform troubleshooting of DTC P0105 first.
- If DTC P0105 (Manifold Absolute Pressure/Barometric Pressure Circuit Malfunction), P0106 (Manifold Absolute Pressure /Barometric Pressure Circuit Range/Performance Problem), P0110 (Intake Air Temp. Circuit Malfunction), P0115 (Engine Coolant Temp. Circuit Malfunction) and P0120 (Throttle/Pedal Position Sensor/Switch ”A” Circuit Malfunction) are output simultaneously, E2 (sensor ground) may be open.
- Read freeze frame data using TOYOTA hand–held tester or OBD II scan tool. Because freeze frame records the engine conditions when the malfunction is detected, when troubleshooting it is useful for determining whether the vehicle was running or stopped, the engine warmed up or not, the air–fuel ratio lean or rich, etc. at the time of the malfunction.

1	**Are there any other codes (besides DTC P0106) being output?**

YES → **Go to relevant DTC chart.**

NO

2	**Check manifold absolute pressure sensor operation (See page SF–52).**

OK → **Check vacuum line between intake air chamber and manifold absolute pressure sensor.**

NG

Replace manifold absolute pressure sensor.

DI00O–05

DTC	P0110	Intake Air Temp. Circuit Malfunction

CIRCUIT DESCRIPTION

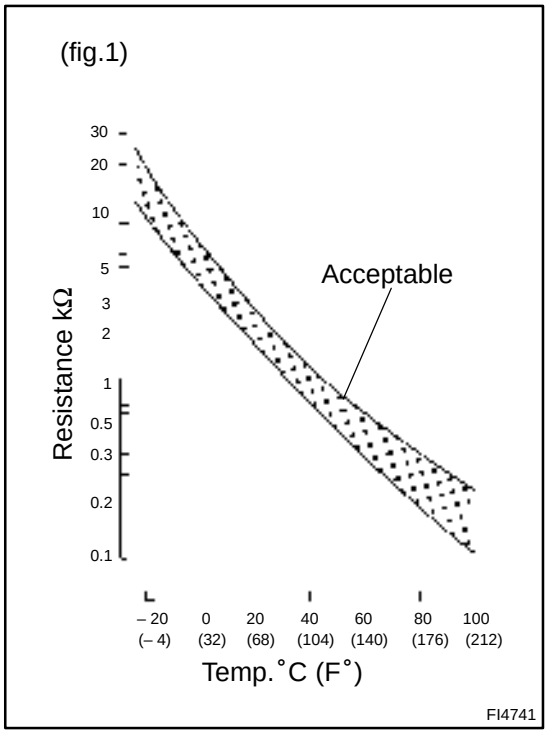

The intake air temp. sensor is built into the air cleaner cap and senses the intake air temperature.

A thermistor built in the sensor changes the resistance value according to the intake air temperature, the lower the intake air temperature, the greater the thermistor resistance value, and the higher the intake air temperature, the lower the thermistor resistance value (See fig.1).

The air intake temperature sensor is connected to the ECM (See below). The 5 V power source voltage in the ECM is applied to the intake air temp. sensor from the terminal THA via a resistor R.

That is, the resistor R and the intake air temp. sensor are connected in series. When the resistance value of the intake air temp. sensor changes in accordance with changes in the intake air temperature, the potential at terminal THA also changes. Based on this signal, the ECM increases the fuel injection volume to improve driveability during cold engine operation.

If the ECM detects the DTC P0110, it operates the fail safe function in which the intake air temperature is assumed to be 20˚C (68˚F).

DTC No.	DTC Detecting Condition	Trouble Area
P0110	Open or short in intake air temp. sensor circuit	●Open or short in intake air temp. sensor circuit ●Intake air temp. sensor ●ECM

HINT:

After confirming DTC P0110, use the OBD II scan tool or TOYOTA hand–held tester to confirm the intake air temperature from the CURRENT DATA.

Temperature Displayed	Malfunction
–40˚C (–40˚F)	Open circuit
140˚C (284˚F) or more	Short circuit

WIRING DIAGRAM

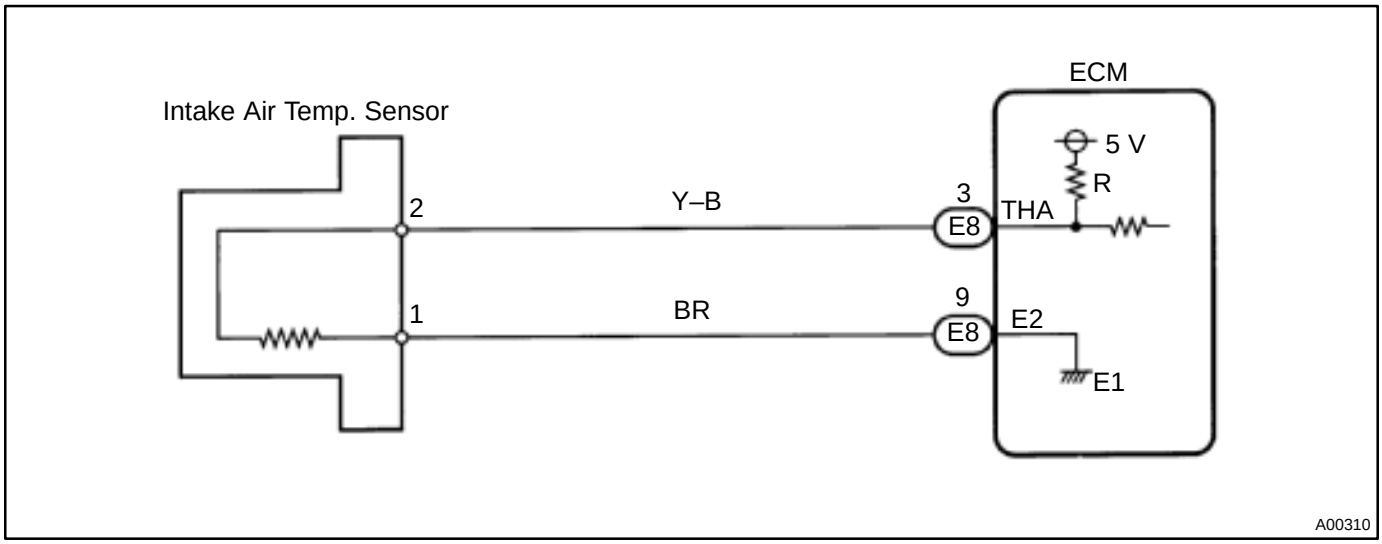

INSPECTION PROCEDURE

HINT:

- If DTCs P0105 (Manifold Absolute Pressure/Barometric Pressure Circuit Malfunction), P0106 (Manifold Absolute Pressure /Barometric Pressure Circuit Range/Performance Problem), P0110 (Intake Air Temp. Circuit Malfunction), P0115 (Engine Coolant Temp. Circuit Malfunction) and P0120 (Throttle/Pedal Position Sensor/Switch ”A” Circuit Malfunction) are output simultaneously, E2 (sensor ground) may be open.
- Read freeze frame data using TOYOTA hand–held tester or OBD II scan tool. Because freeze frame records the engine conditions when the malfunction is detected, when troubleshooting it is useful for determining whether the vehicle was running or stopped, the engine warmed up or not, the air–fuel ratio lean or rich, etc. at the time of the malfunction.

1	**Connect OBD II scan tool or TOYOTA hand–held tester, and read value of intake air temperature.**

PREPARATION:

(a) Connect the OBD II scan tool or TOYOTA hand–held tester to DLC3.

(b) Turn the ignition switch ON and push the OBD II scan tool or TOYOTA hand–held tester main switch ON.

CHECK:

Read temperature value on the OBD II scan tool or TOYOTA hand–held tester.

OK:

Same as actual air intake temperature.

HINT:

- If there is open circuit, OBD II scan tool or TOYOTA hand–held tester indicates – 40˚C (– 40˚F).
- If there is short circuit, OBD II scan tool or TOYOTA hand–held tester indicates 140˚C (284˚F) or more.

NG → **–40˚C (–40˚F) .... Go to step 2.**
140˚C (284˚F) or more .... Go to step 4.

OK

Check for intermittent problems (See page DI–3).

2	**Check for open in harness or ECM.**

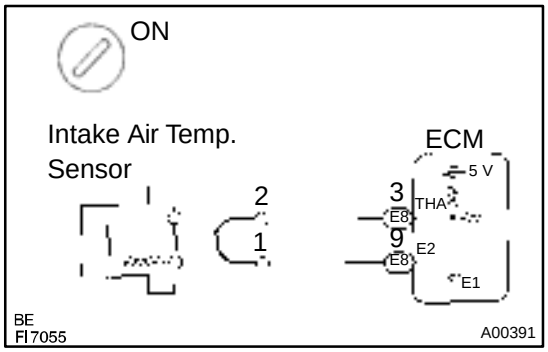

PREPARATION:

(a) Disconnect the intake air temp. sensor connector.

(b) Connect the sensor wire harness terminals together.

(c) Turn the ignition switch ON.

CHECK:

Read temp. value on the OBD II scan tool or TOYOTA hand–held tester.

OK:

Temp. value: 140˚C (284˚F) or more

OK → **Confirm good connection at sensor. If OK, replace intake air temp. sensor.**

NG

3	Check for open in harness or ECM.

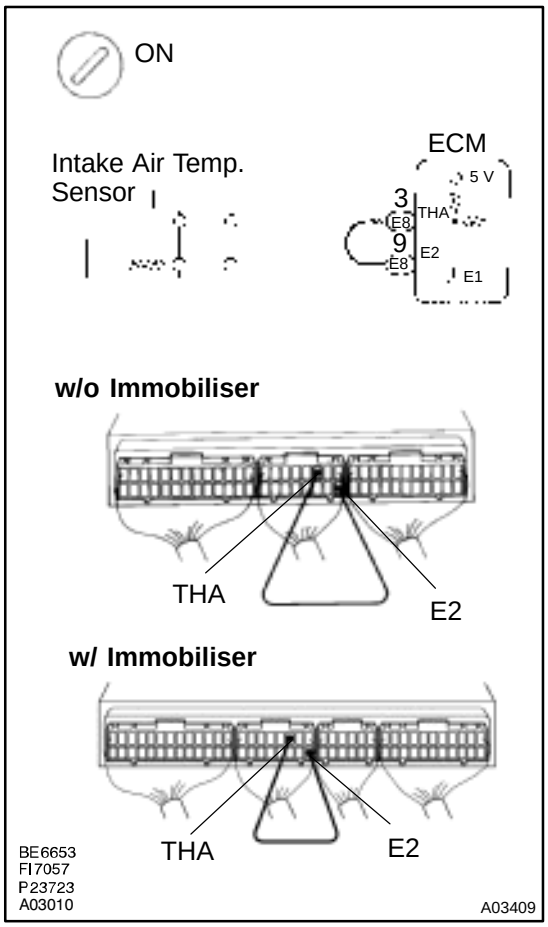

PREPARATION:

(a) Remove the glove compartment (See page SF–64).

(b) Connect between terminals THA and E2 of the ECM connector.

HINT:

The intake air temp. sensor connector is disconnected.

Before checking, do a visual and contact pressure check for the ECM connector (See page IN–31).

(c) Turn the ignition switch ON.

CHECK:

Read temperature value on the OBD II scan tool or TOYOTA hand–held tester.

OK:

Temperature value: 140°C (284°F) or more

OK	Open in harness between terminals E2 or THA, repair or replace harness.

NG

Confirm good connection at ECM. If OK, check and replace ECM (See page IN–31).

4	Check for short in harness and ECM.

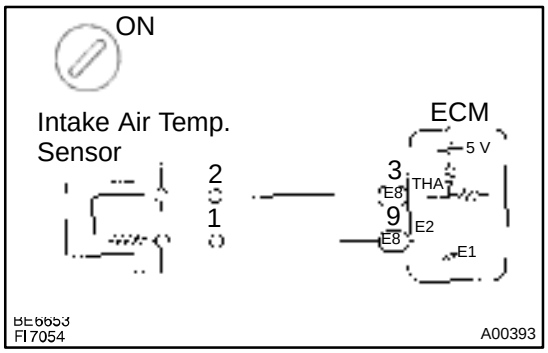

PREPARATION:

(a) Disconnect the intake air temp. sensor connector.

(b) Turn the ignition switch ON.

CHECK:

Read temperature value on the OBD II scan tool or TOYOTA hand–held tester.

OK:

Temperature value: –40˚C (–40˚F)

OK	Replace intake air temp. sensor.

NG

5	Check for short in harness or ECM.

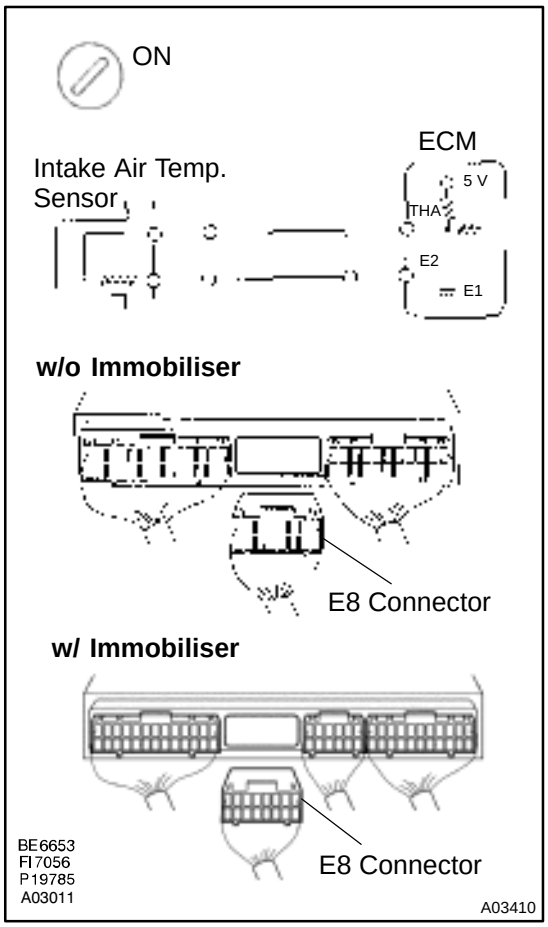

PREPARATION:

(a) Remove the glove compartment (See page SF–64).

(b) Disconnect the E8 connector from the ECM.

HINT:

The intake air temp. sensor connector is disconnected.

(c) Turn the ignition switch ON.

CHECK:

Read temperature value on the OBD II scan tool or TOYOTA hand–held tester.

OK:

Temperature value: –40˚C (–40˚F)

OK	Repair or replace harness or connector.

NG

Check and replace ECM (See page IN–31).

DI00P–05

DTC	P0115	Engine Coolant Temp. Circuit Malfunction

CIRCUIT DESCRIPTION

A thermistor built into the engine coolant temp. sensor changes the resistance value according to the engine coolant temp.

The structure of the sensor and connection to the ECM is the same as in the intake air temp. circuit malfunction shown on page DI–35.

If the ECM detects the DTC P0115, it operates fail safe function in which the engine coolant temperature is assumed to be 80˚C (176˚F).

DTC No.	Detection Item	Trouble Area
P0115	Open or short in engine coolant temp. sensor circuit	●Open or short in engine coolant temp. sensor circuit ●Engine coolant temp. sensor ●ECM

HINT:

After confirming DTC P0115, use the OBD II scan tool or TOYOTA hand–held tester to confirm the engine coolant temp. from the CURRENT DATA.

Temp. Displayed	Malfunction
–40˚C (–40˚F)	Open circuit
140˚C (284˚F) or more	Short circuit

WIRING DIAGRAM

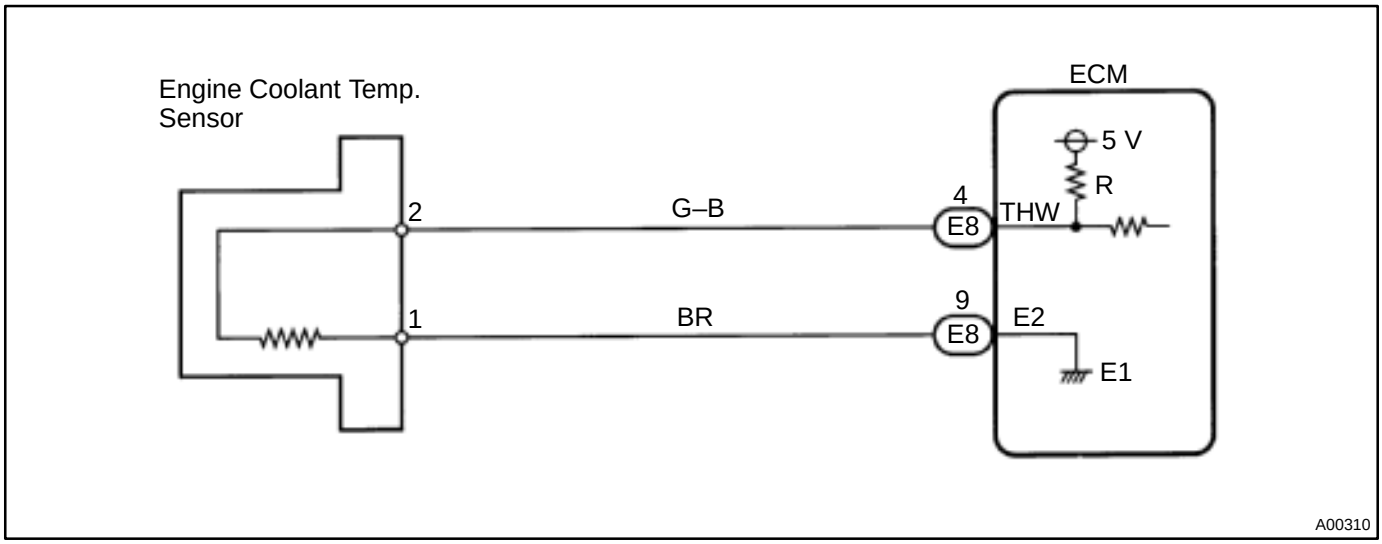

INSPECTION PROCEDURE

HINT:

- If DTCs P0105 (Manifold Absolute Pressure/Barometric Pressure Circuit Malfunction), P0106 (Manifold Absolute Pressure /Barometric Pressure Circuit Range/Performance Problem), P0110 (Intake Air Temp. Circuit Malfunction), P0115 (Engine Coolant Temp. Circuit Malfunction) and P0120 (Throttle/ Pedal Position Sensor/Switch ”A” Circuit Malfunction) are output simultaneously, E2 (sensor ground) may be open.
- Read freeze frame data using TOYOTA hand–held tester or OBD II scan tool. Because freeze frame records the engine conditions when the malfunction is detected, when troubleshooting it is useful for determining whether the vehicle was running or stopped, the engine warmed up or not, the air–fuel ratio lean or rich, etc. at the time of the malfunction.

1	**Connect OBD II scan tool or TOYOTA hand–held tester, and read value of engine coolant temperature.**

PREPARATION:

(a) Connect the OBD II scan tool or TOYOTA hand–held tester to the DLC3.

(b) Turn the ignition switch ON and push the OBD II scan tool or TOYOTA hand–held tester main switch ON.

CHECK:

Read temperature value on the OBD II scan tool or TOYOTA hand–held tester.

OK:

Same as actual engine coolant temperature

HINT:

- If there is open circuit, OBD II scan tool or TOYOTA hand–held tester indicates –40˚C (–40˚F).
- If there is open circuit, OBD II scan tool or TOYOTA hand–held tester indicates 140˚C (284˚F) or more.

NG → **–40˚C (–40˚F) ... Go to step 2.**
140˚C (284˚F) or more ... Go to step 4.

OK

Check for intermittent problems (See page DI–3).

2	**Check for open in harness or ECM.**

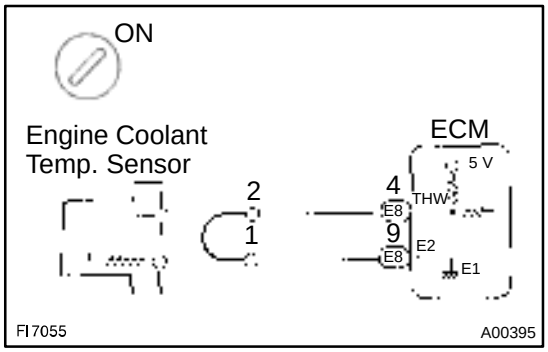

PREPARATION:

(a) Disconnect the engine coolant temp. sensor connector.

(b) Connect the sensor wire harness terminals together.

(c) Turn the ignition switch ON.

CHECK:

Read temperature value on the OBD II scan tool or TOYOTA hand–held tester.

OK:

Temperature value: 140˚C (284˚F) or more

OK → **Confirm good connection at sensor. If OK, replace engine coolant temp. sensor.**

NG

3	Check for open in harness or ECM.

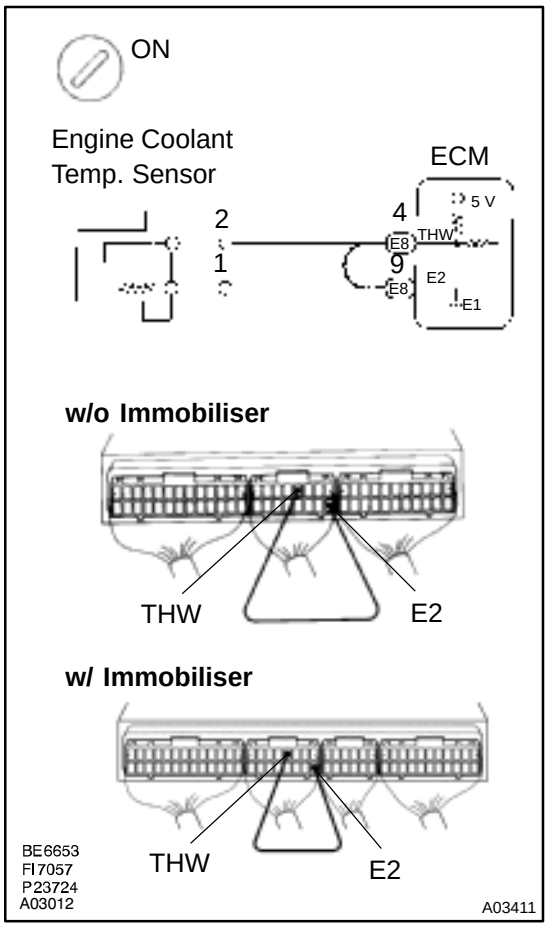

PREPARATION:

(a) Remove the glove compartment (See page SF–64).

(b) Connect between terminals THW and E2 of the ECM connector.

HINT:

The engine coolant temp. sensor connector is disconnected. Before checking, do a visual and contact pressure check for the ECM connector (See page IN–31).

(c) Turn the ignition switch ON.

CHECK:

Read temperature value on the OBD II scan tool or TOYOTA hand–held tester.

OK:

Temperature value: 140˚C (284˚F) or more

OK	Open in harness between terminals E2 or THW, repair or replace harness.

NG

Confirm good connection at ECM. If OK, check and replace ECM (See page IN–31).

4	Check for short in harness and ECM.

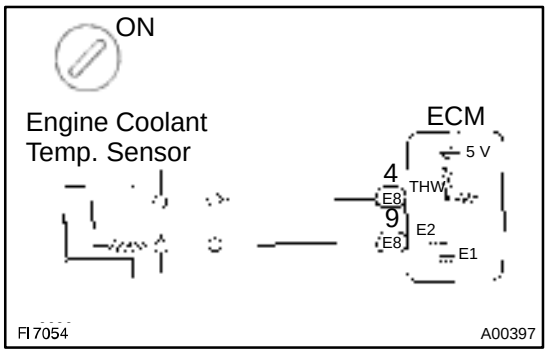

PREPARATION:

(a) Disconnect the engine coolant temp. sensor connector.

(b) Turn the ignition switch ON.

CHECK:

Read temperature value on the OBD II scan tool or TOYOTA hand–held tester.

OK:

Temperature value: – 40˚C (– 40˚F)

OK	Replace engine coolant temp. sensor.

NG

5	Check for short in harness or ECM.

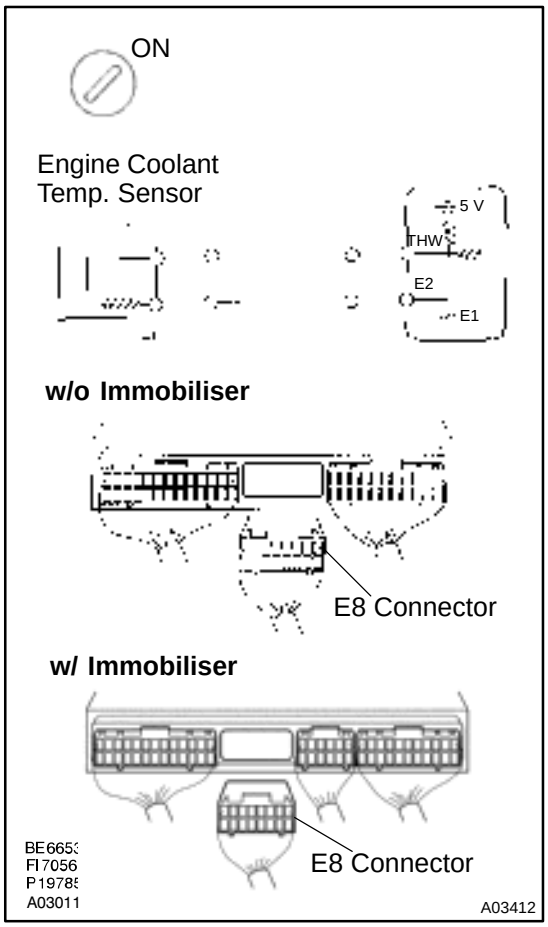

PREPARATION:

(a) Remove the glove compartment (See page SF–64).

(b) Disconnect the E8 connector from the ECM.

HINT:

The engine coolant temp. sensor connector is disconnected.

(c) Turn the ignition switch ON.

CHECK:

Read temperature value on the OBD II scan tool or TOYOTA hand–held tester.

OK:

Temperature value: –40˚C (–40˚F)

OK → **Repair or replace harness or connector.**

NG

Check and replace ECM (See page IN–31).

DI00Q–05

DTC	P0116	Engine Coolant Temp. Circuit Range/ Performance Problem

CIRCUIT DESCRIPTION

Refer to DTC P0115 (Engine Coolant Temp. Circuit Malfunction) on page DI–41.

DTC No.	DTC Detecting Condition	Trouble Area
P0116	If THW < –7°C (19.4°F) or THA < –7°C (19.4°F) 20 min. or more after starting engine, engine coolant temp. sensor value is 30°C (86°F)*1 20°C (48°F)*2 or less (2 trip detection logic)	●Engine coolant temp. sensor ●Cooling system
	If THW ≦ –7°C (19.4°F) and THA ~ –7°C (19.4°F) and 10°C (50°F) at engine start, 5 min. or more after starting engine, engine coolant temp. sensor value is 30°C (86°F)*1 20°C (48°F)*2 or less (2 trip detection logic)	
	If THW ~ 10°C (50°F) and THA ~ 10°C (50°F) at engine start, 2 min. or more after starting engine, engine coolant temp. sensor value is 30°C (86°F)*1 20°C (48°F)*2 or less (2 trip detection logic)	
	When THW ≦ 35°C (95°F) and 60°C (140°F), THA ~ –6.7°C (19.9°F) when starting the engine, condition (a) and (b) continues: (a) Vehicle speed is changing (Not stable) (b) Water temperature change is lower than 3°C (37.4°F) from the water temperature since when sterting the engine (2 trip detection logic)	

*1: Except California Specification vehicles.
*2: Only for California Specification vehicles.

INSPECTION PROCEDURE

HINT:

- If DTCs P0115 (Engine Coolant Temp. Circuit Malfunction) and P0116 (Engine Coolant Temp. Circuit Range/Performance Problem) are output simultaneously, engine coolant temp. sensor circuit may be open. Perform troubleshooting of DTC P0115 first.
- Read freeze frame data using TOYOTA hand–held tester or OBD II scan tool. Because freeze frame records the engine conditions when the malfunction is detected, when troubleshooting it is useful for determining whether the vehicle was running or stopped, the engine warmed up or not, the air–fuel ratio lean or rich, etc. at the time of the malfunction.

1	Are there any other codes (besides DTC P0116) being output?

YES → Go to relevant DTC chart.

NO

2	Check thermostat (See page CO–10).

NG → Replace thermostat.

OK →

Replace engine coolant temp. sensor.

DTC	P0120	Throttle/Pedal Position Sensor/Switch ”A” Circuit Malfunction

CIRCUIT DESCRIPTION

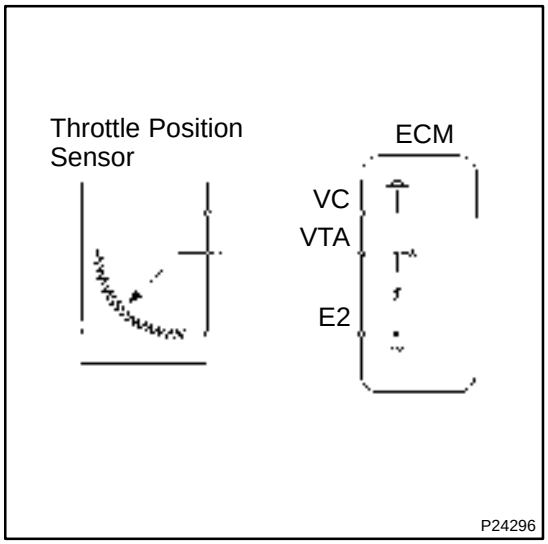

The throttle position sensor is mounted in the throttle body and detects the throttle valve opening angle. When the throttle valve is fully closed, a voltage of approximately 0.3 ~ 0.8 V is applied to terminal VTA of the ECM. The voltage applied to the terminals VTA of the ECM increases in proportion to the opening angle of the throttle valve and becomes approximately 3.2 ~ 4.9 V when the throttle valve is fully opened. The ECM judges the vehicle driving conditions from this signal input from terminal VTA, and uses it as one of the conditions for deciding the air–fuel ratio correction, power increase correction and fuel–cut control etc.

DTC No.	DTC Detecting Condition	Trouble Area
P0120	Condition (a) or (b) continues with more than 5 sec.: (a) VTA < 0.1 V (b) VTA > 4.9 V	●Open or short in throttle position sensor circuit ●Throttle position sensor ●ECM

HINT:
After confirming DTC P0120, use the OBD II scan tool or TOYOTA hand–held tester to confirm the throttle valve opening percentage.

Throttle valve opening position expressed as percentage		Trouble Area
Throttle valve fully closed	Throttle valve fully open	
0 %	0 %	VC line open VTA line open or short
Approx. 100 %	Approx. 100 %	E2 line open

WIRING DIAGRAM

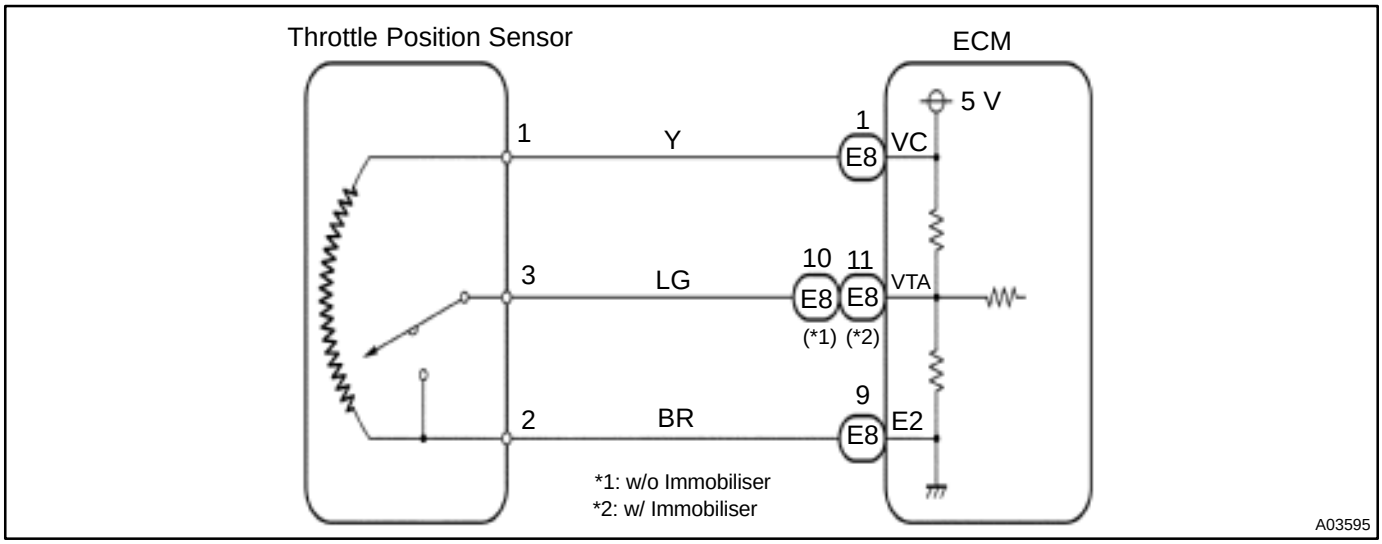

INSPECTION PROCEDURE

HINT:

- If DTCs P0105 (Manifold Absolute Pressure/Barometric Pressure Circuit Malfunction), P0106 (Manifold Absolute Pressure /Barometric Pressure Circuit Range/Performance Problem), P0110 (Intake Air Temp. Circuit Malfunction), P0115 (Engine Coolant Temp. Circuit Malfunction) and P0120 (Throttle/Pedal Position Sensor/Switch ”A” Circuit Malfunction) are output simultaneously, E2 (sensor ground) may be open.
- Read freeze frame data using TOYOTA hand–held tester or OBD II scan tool. Because freeze frame records the engine conditions when the malfunction is detected, when troubleshooting it is useful for determining whether the vehicle was running or stopped, the engine warmed up or not, the air–fuel ratio lean or rich, etc. at the time of the malfunction.

1	**Connect OBD II scan tool or TOYOTA hand–held tester, read the throttle valve opening percentage.**

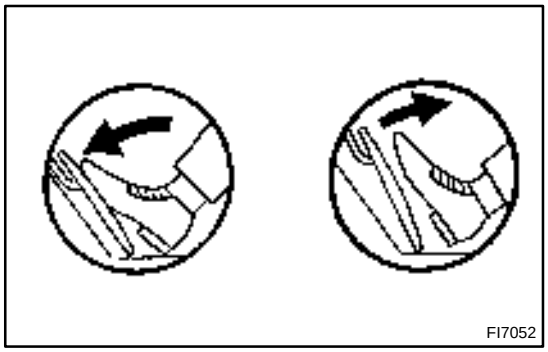

PREPARATION:

(a) Connect the OBD II scan tool or TOYOTA hand–held tester to DLC3.

(b) Turn the ignition switch ON and push the OBD II scan tool or TOYOTA hand–held tester main switch ON.

CHECK:

Read the throttle valve opening percentage.

OK:

Throttle valve	Throttle valve opening position expressed as percentage
Fully open	Approx. 70 %
Fully closed	Approx. 10 %

OK	**Check for intermittent problems (See page DI–3).**

NG

2	**Check voltage between terminal VC of throttle position sensor connector and body ground.**

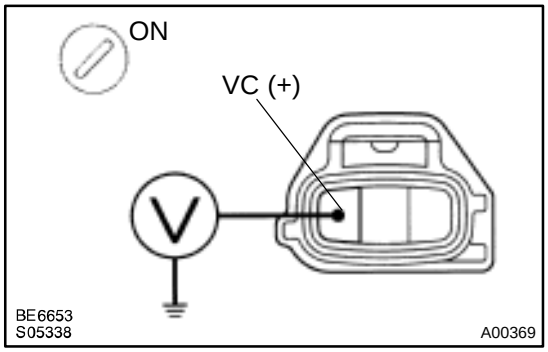

PREPARATION:

(a) Disconnect the throttle position sensor connector.

(b) Turn the ignition switch ON.

CHECK:

Measure voltage between terminal VC of the throttle position connector and body ground.

OK:

Voltage: 4.5 ~ 5.5 V

NG	**Go to step 5.**

OK

3	**Check throttle position sensor (See page SF–29).**

NG → **Replace throttle position sensor.**

OK

4	**Check voltage between terminals VTA and E2 of ECM connector.**

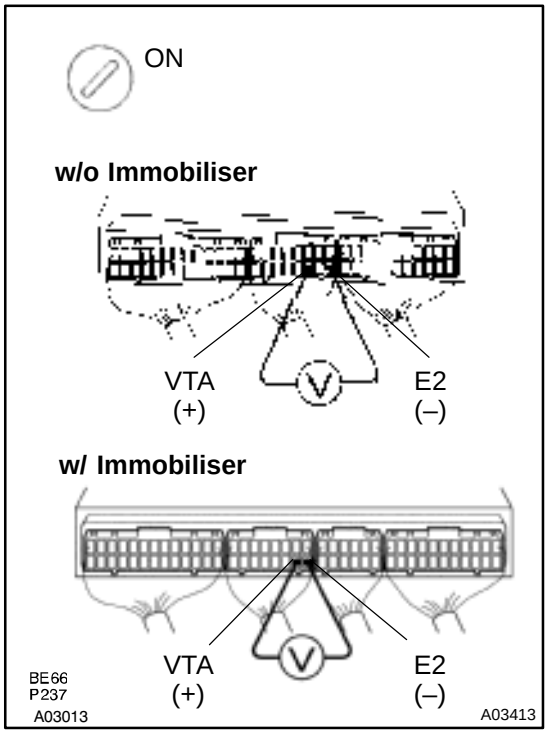

PREPARATION:

(a) Remove the glove compartment (See page SF–64).

(b) Turn the ignition switch ON.

CHECK:

Measure voltage between terminals VTA and E2 of the ECM connector.

OK:

Throttle valve	Voltage
Fully closed	0.3 ~ 1.0 V
Fully open	3.2 ~ 4.9 V

NG → **Check for open and short in harness and connector between ECM and throttle position sensor (VTA or E2 line) (See page IN–31).**

OK

Check and replace ECM (See page IN–31).

5	Check voltage between terminals VC and E2 of ECM connector.

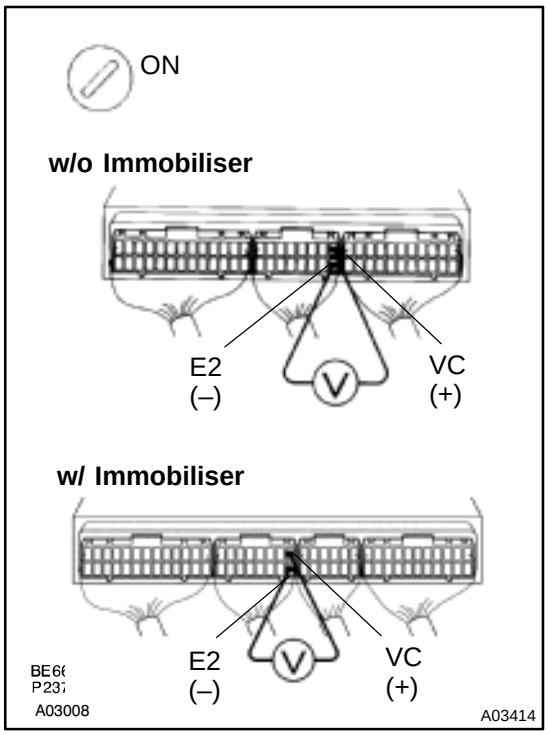

PREPARATION:

(a) Remove the glove compartment (See page SF–64).

(b) Turn ignition switch ON.

CHECK:

Measure voltage between terminals VC and E2 of the ECM connector.

OK:

Voltage: 4.5 ~ 5.5 V

NG → **Check and replace ECM (See page IN–31).**

OK

Check for open in harness and connector between ECM and sensor (VC line) (See page IN–31).

DI00S–04

DTC	P0121	Throttle/Pedal Position Sensor/Switch ”A” Circuit Range/Performance Problem

CIRCUIT DESCRIPTION

Refer to DTC P0120 (Throttle/Pedal Position Sensor/Switch ”A” Circuit Malfunction) on page DI–49.

DTC No.	Detection Item	Trouble Area
P0121	After vehicle speed has been exceeded 30 km/h (19 mph) even once, output value of throttle position sensor is out of applicable range while vehicle speed between 30 km/h (19 mph) and 0 km/h (0 mph) (2 trip detection logic)	●Throttle position sensor

INSPECTION PROCEDURE

HINT:

Read freeze frame data using TOYOTA hand–held tester or OBD II scan tool. Because freeze frame records the engine conditions when the malfunction is detected, when troubleshooting it is useful for determining whether the vehicle was running or stopped, the engine warmed up or not, the air–fuel ratio lean or rich, etc. at the time of the malfunction.

1	Are there any other codes (besides DTC P0121) being output?

YES → Go to relevant DTC chart.

NO →

Replace throttle position sensor.

DI1JU–03

DTC	P0125	Insufficient Coolant Temp. for Closed Loop Fuel Control (Only for California Spec.)

CIRCUIT DESCRIPTION

To obtain a high purification rate for the CO, HC and NOx components of the exhaust gas, a three–way catalytic converter is used, but for the most efficient use of the three–way catalytic converter, the air–fuel ratio must be precisely controlled so that it is always close to the stoichiometric air–fuel ratio.

The A/F sensor has the characteristic that provides output voltage* approximately proportional to the existing air–fuel ratio. The A/F sensor output voltage* is used to provide feedback for the ECM to control the air–fuel ratio.

By the A/F sensor output, the ECM can determine the deviation amount from the stoichiometric air–fuel ratio and control the proper injection time immediately. If the A/F sensor is malfunctioning, ECM is unable to perform accurate air–fuel ratio control.

The A/F sensor is equipped with a heater which heats the zirconia element. The heater is controlled by the ECM. When the intake air volume is low (the temp. of the exhaust gas is low), current flows to the heater to heat the sensor for accurate oxygen concentration detection.

*: The voltage value changes at the inside of the ECM only.

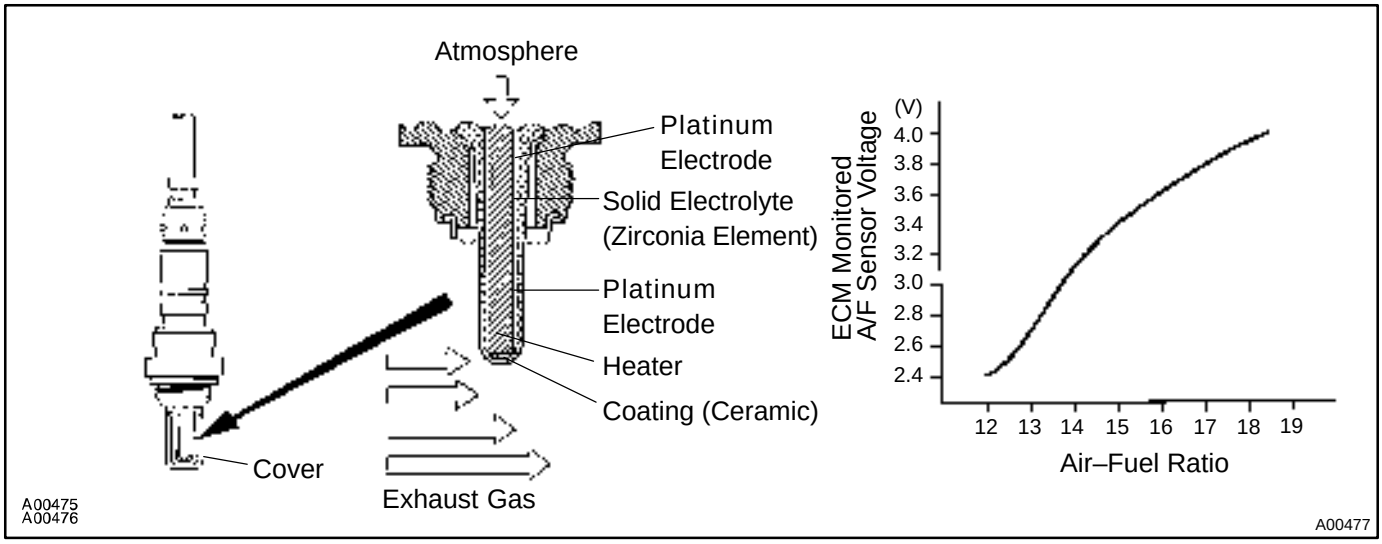

DTC No.	DTC Detecting Condition	Trouble Area
P0125	After engine is warmed up, A/F sensor output* does not change when conditions (a), (b), and (c) continue for at least 1.5 min.: *: Output value changes at inside of ECM only (a) Engine speed: 1,500 rpm or more (b) Vehicle speed: 40 ~ 100 km/h (25 ~ 62 mph) (c) Throttle valve is not fully closed	●Fuel system ●Injector ●Ignition system ●Gas leakage on exhaust system ●Open or short in A/F sensor circuit ●A/F sensor ●ECM

HINT:

- After confirming DTC P0125, use the OBD II scan tool or TOYOTA hand−held tester to confirm voltage output of A/F sensor from the CURRENT DATA.
- The ECM controls the voltage of AF− and AF+ terminals of ECM to the fixed voltage. Therefore, it is impossible to confirm the A/F sensor output voltage without OBD II scan tool or TOYOTA hand–held tester.
- OBD II scan tool (excluding TOYOTA hand–held tester) displays the one fifth of the A/F sensor output voltage which is displayed on the TOYOTA hand–held tester.

WIRING DIAGRAM

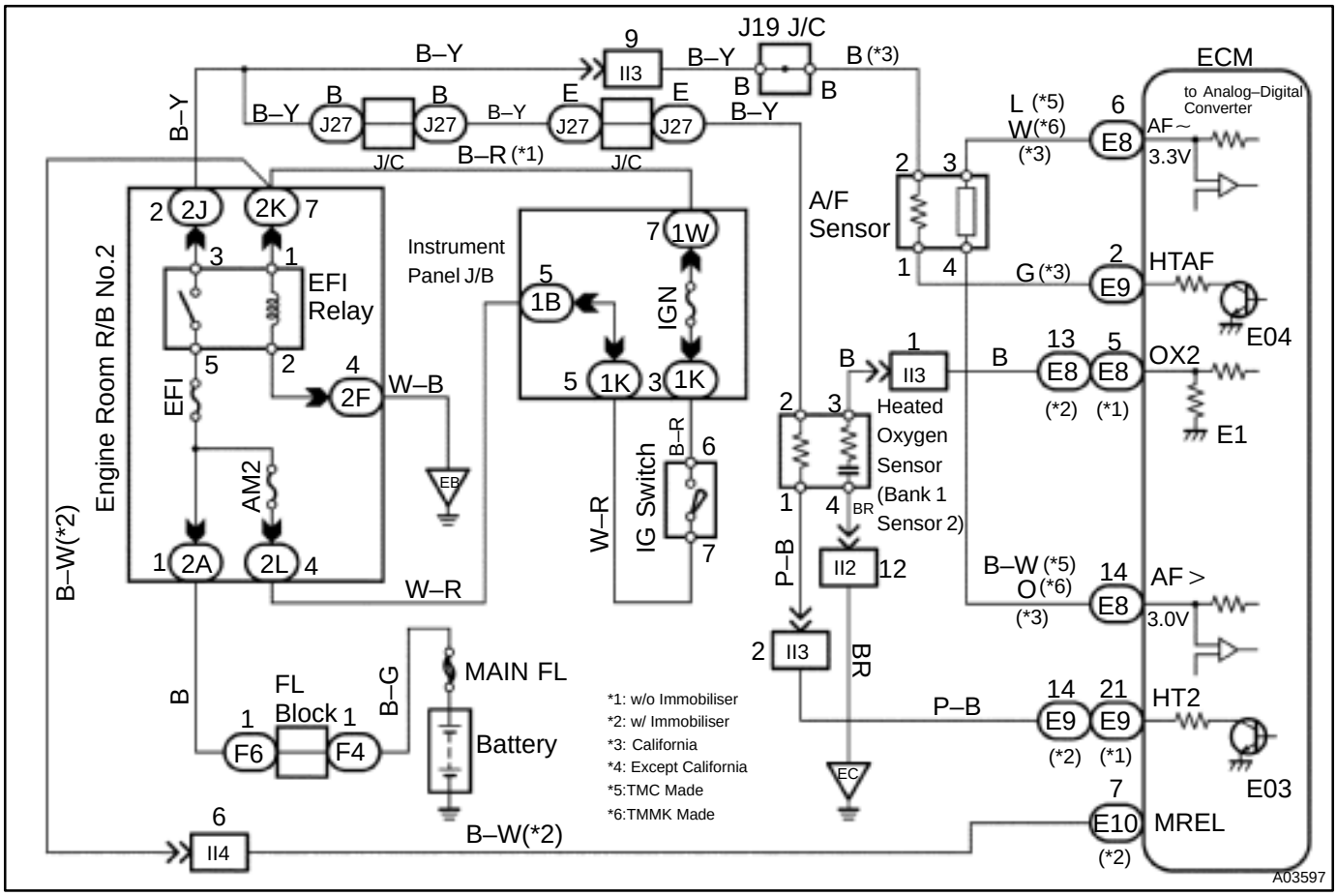

INSPECTION PROCEDURE

HINT:

- If the vehicle run out fuel, the air–fuel ratio is LEAN and DTC P0125 will be recorded. The MIL then comes on.
- Read freeze frame data using TOYOTA hand–held tester or OBD II scan tool. Because freeze frame records the engine conditions when the malfunction is detected, when troubleshooting it is useful for determining whether the vehicle was running or stopped, the engine warmed up or not, the air–fuel ratio lean or rich, etc. at the time of the malfunction.

1	**Are there any other codes (besides DTC P0125) being output?**

YES → **Go to relevant DTC chart.**

NO

2	**Connect OBD II scan tool or TOYOTA hand–held tester, and read value for voltage output of A/F sensor.**

PREPARATION:

(a) Connect the OBD II scan tool or TOYOTA hand–held tester to the DLC3.

(b) Warm up the A/F sensor with the engine at 2,500 rpm for approx. 90 sec.

CHECK:

Read voltage value of the A/F sensor on the screen of OBD II scan tool or TOYOTA hand–held tester when you perform all the following conditions.

HINT:

The voltage of AF− terminal of ECM is 3.3 V fixed and the A/F+ terminal is 3.0 V fixed. Therefore, it is impossible to check the A/F sensor output voltage at the terminals (AF−/AF+) of ECM.

OK:

Condition	A/F Sensor Voltage Value
Engine idling	● Not remains at 3.30 V (* 0.660 V) ● Not remains at 3.8 V (* 0.76 V) or more ● Not remains at 2.8 V (* 0.56 V) or less *: When you use the OBD II scan tool (excluding TOYOTA hand–held tester)
Engine racing	
Driving at engine speed 1,500 rpm or more and vehicle speed 40 km/h (25 mph) or more, and operate throttle valve open and close	

HINT:

- During fuel enrichment, there is a case that the output voltage of the A/F sensor is below 2.8 V (* 0.56 V), it is normal.
- During fuel cut, there is a case that the output voltage of the A/F sensor is above 3.8 V (* 0.76 V), it is normal.
- If output voltage of the A/F sensor remains at 3.30 V (* 0.660 V) even after performing all the above conditions, A/F the sensor circuit may be open.
- If output voltage of A/F sensor remains at 3.8 V (* 0.76 V) or more, or 2.8 V (* 0.56 V) or less even after performing all the above conditions, A/F sensor circuit may be short.

*: When you use the OBD II scan tool (excluding TOYOTA hand–held tester).

OK → **Go to step 10.**

NG

3	Check for open and short in harness and connector between ECM and A/F sensor (See page IN–31).

NG → Repair or replace harness or connector.

OK ↓

4	Check resistance of A/F sensor heater (See page SF–59).

NG → Replace A/F sensor.

OK ↓

5	Check air induction system (See page SF–1).

NG → Replace or replace.

OK ↓

6	Check EGR system (See page EC–12).

NG → Repair EGR system.

OK ↓

7	Check fuel pressure (See page SF–6).

NG → Check and repair fuel pump, fuel pipe line and filter (See page SF–1).

OK ↓

8	Check injector injection (See page SF–23).

NG → Replace injector.

OK

9	Check gas leakage on exhaust system.

NG → Repair or replace.

OK

Replace A/F sensor.

10	Perform confirmation driving pattern (See page DI–152).

Go

11	Is there DTC P0125 being output again?

YES → Check and replace ECM.

NO

12	Did vehicle runs out of fuel in the past?

NO → Check for intermittent problems.

YES

DTC P0125 is caused by running out of fuel.

DTC	P0125	Insufficient Coolant Temp. for Closed Loop Fuel Control (Except California Spec.)

CIRCUIT DESCRIPTION

To obtain a high purification rate for the CO, HC and NOx components of the exhaust gas, a three–way catalytic converter is used, but for the most efficient use of the three–way catalytic converter, the air–fuel ratio must be precisely controlled so that it is always close to the stoichiometric air–fuel ratio.

The heated oxygen sensor has the characteristic where by its output voltage changes suddenly in the vicinity of the stoichiometric air–fuel ratio. This is used to detect the oxygen concentration in the exhaust gas and provide feedback to the computer for control of the air–fuel ratio.

When the air–fuel ratio becomes LEAN, the oxygen concentration in the exhaust increases and the heated oxygen sensor informs the ECM of the LEAN condition (small electromotive force: 0 V).

When the air–fuel ratio is RICHER than the stoichiometric air–fuel ratio the oxygen concentration in the exhaust gas is reduced and the heated oxygen sensor informs the ECM of the RICH condition (large electromotive force: 1 V).

The ECM judges by the electromotive force from the heated oxygen sensor whether the air–fuel ratio is RICH or LEAN and controls the injection time accordingly. However, if malfunction of the heated oxygen sensor causes output of abnormal electromotive force, the ECM is unable to perform accurate air–fuel ratio control.

The heated oxygen sensors include a heater which heats the zirconia element. The heater is controlled by the ECM. When the intake air volume is low (the temperature of the exhaust gas is low) current flows to the heater to heat the sensor for accurate oxygen concentration detection.

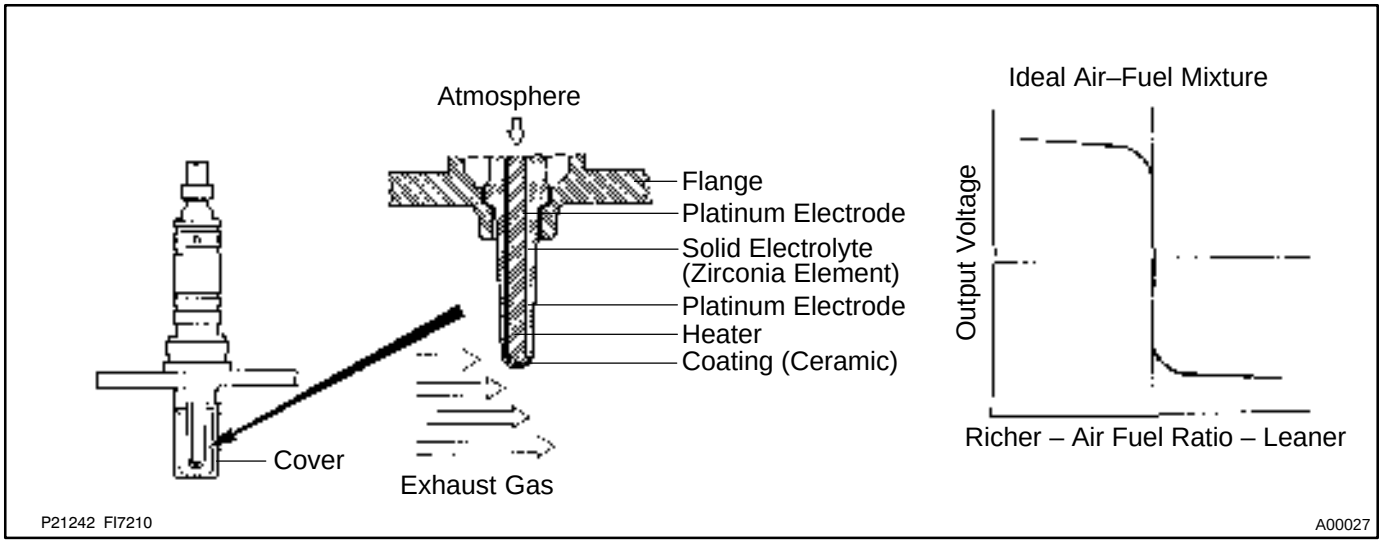

DTC No.	DTC Detecting Condition	Trouble Area
P0125	After engine is warmed up, heated oxygen sensor (bank 1 sensor 1) output does not indicate RICH even once when conditions (a), (b) and (c) continue for at least 1.5 min.: (a) Engine speed: 1,500 rpm or more (b) Vehicle speed: 40 ~ 100 km/h (25 ~ 62 mph) (c) Throttle valve does not fully closed	●Fuel system ●Injector ●Ignition system ●Gas leakage on exhaust system ●Open or short in heated oxygen sensor (bank 1 sensor 1) circuit ●Heated oxygen sensor (bank 1 sensor 1) ●ECM

HINT:
After confirming DTC P0125, use the OBD II scan tool or TOYOTA hand–held tester to confirm voltage output of the heated oxygen sensor (bank 1 sensor 1) from the CURRENT DATA.
If voltage output of the heated oxygen sensor (bank 1 sensor 1) is 0 V, heated oxygen sensor (bank 1 sensor 1) circuit may be open or short.

WIRING DIAGRAM

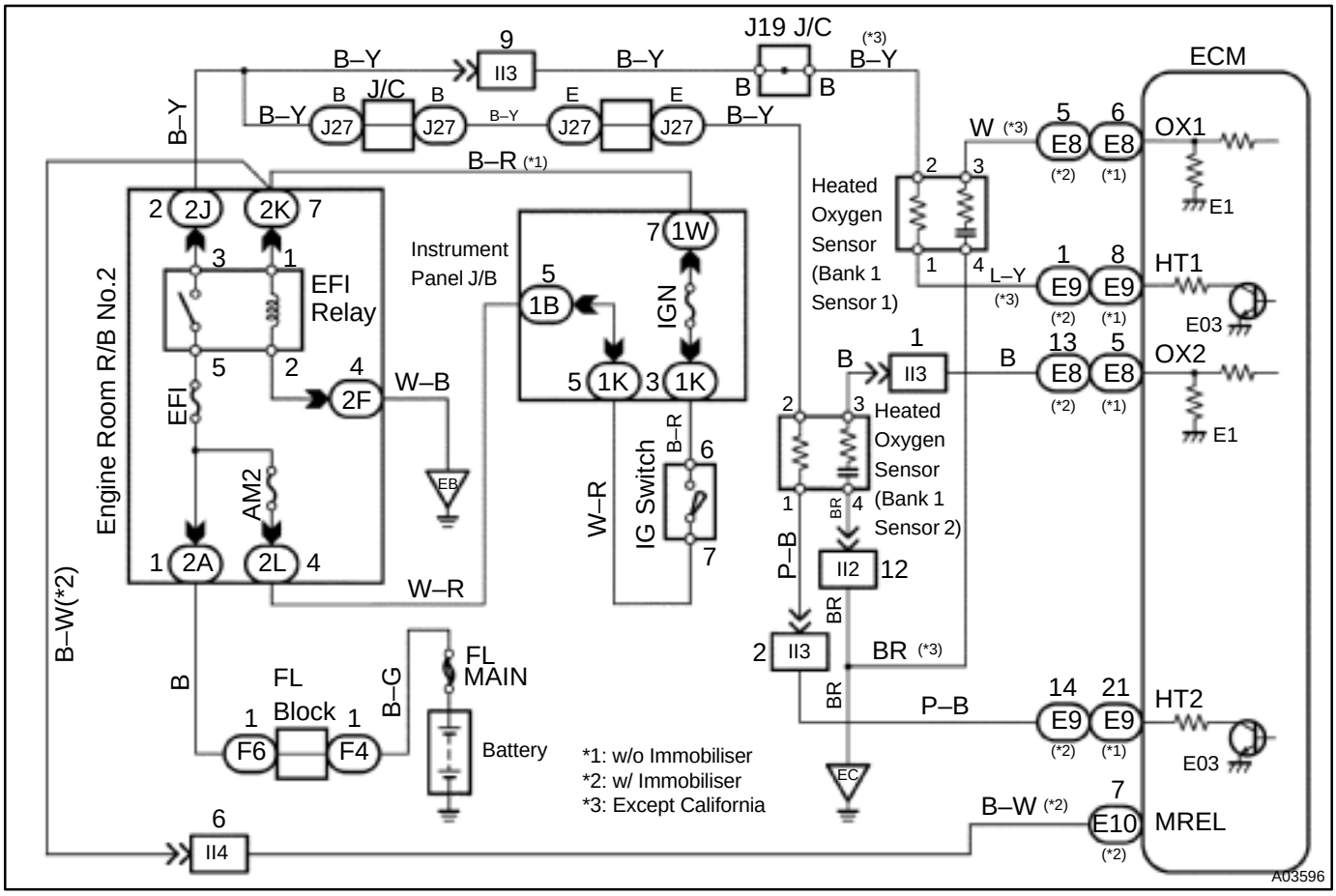

INSPECTION PROCEDURE

HINT:

- If the vehicle run out fuel, the air–fuel ratio is LEAN and DTC P0125 will be recorded. The MIL then comes on.
- Read freeze frame data using TOYOTA hand–held tester or OBD II scan tool. Because freeze frame records the engine conditions when the malfunction is detected, when troubleshooting it is useful for determining whether the vehicle was running or stopped, the engine warmed up or not, the air–fuel ratio lean or rich, etc. at the time of the malfunction.

1	**Are there any other codes (besides DTC P0125) being output?**

YES → **Go to relevant DTC chart.**

NO

2	**Connect OBD II scan tool or TOYOTA hand–held tester, and read value for voltage output of heated oxygen sensor (bank 1 sensor 1).**

PREPARATION:

(a) Connect the OBD II scan tool or TOYOTA hand–held tester to the DLC3.

(b) Warm up the engine to normal operating temp. (above 75˚C (169˚F)).

CHECK:

Read voltage output of the heated oxygen sensor (bank 1 sensor 1) when the engine is suddenly raced.

HINT:

Perform quick racing to 4,000 rpm 3 times using the accelerator pedal.

OK:

Heated oxygen sensor (bank 1 sensor 1) output a RICH signal (0.45 V or more) at least once.

OK → **Go to step 10.**

NG

3	**Check for open and short in harness and connector between ECM and heated oxygen sensor (bank 1 sensor 1) (See page IN–31).**

NG → **Repair or replace harness or connector.**

OK

4	Check whether misfire is occurred or not by monitoring DTC and data list.

NG → Perform troubleshooting for misfire (See page DI–163).

OK ↓

5	Check air induction system (See page SF–1).

NG → Repair or replace.

OK ↓

6	Check EGR system (See page EC–12).

NG → Repair EGR system.

OK ↓

7	Check fuel pressure (See page SF–6).

NG → Check and repair fuel pump, fuel pipe line and filter (See page SF–1).

OK ↓

8	Check injector injection (See page SF–23)

NG → Replace injector.

OK ↓

9	Check gas leakage on exhaust system.

NG → Repair or replace.

OK →

Replace oxygen sensor (bank 1 sensor 1).

10	Perform confirmation driving pattern (See page DI–152).

Go →

11	Is there DTC P0125 being output again?

YES → Check and replace ECM.

NO →

12	Did vehicle runs out of fuel in the past?

NO → Check for intermittent problems.

YES →

DTC P0125 is caused by running out of fuel.

DTC	P0130	Heated Oxygen Sensor Circuit Malfunction (Bank 1 Sensor 1) (Except California Spec.)

CIRCUIT DESCRIPTION

Refer to DTC P0125 (Insufficient Coolant Temp. for Closed Loop Fuel Control (Except California Spec.)) on page DI–55.

DTC No.	DTC Detecting Condition	Trouble Area
P0130	Voltage output of heated oxygen sensor remains at 0.4 V or more, or 0.55 V or less, during idling after engine is warmed up (2 trip detection logic)	●Heated oxygen sensor ●Fuel trim malfunction

HINT:
Sensor 1 refers to the sensor closer to the engine body.
The heated oxygen sensor's output voltage and the short−term fuel trim value can be read using the OBD II scan tool or TOYOTA hand−held tester.

WIRING DIAGRAM

Refer to DTC P0125 (Insufficient Coolant Temp. for Closed Loop Fuel Control (Except California Spec.)) on page DI–55.

CONFIRMATION DRIVING PATTERN

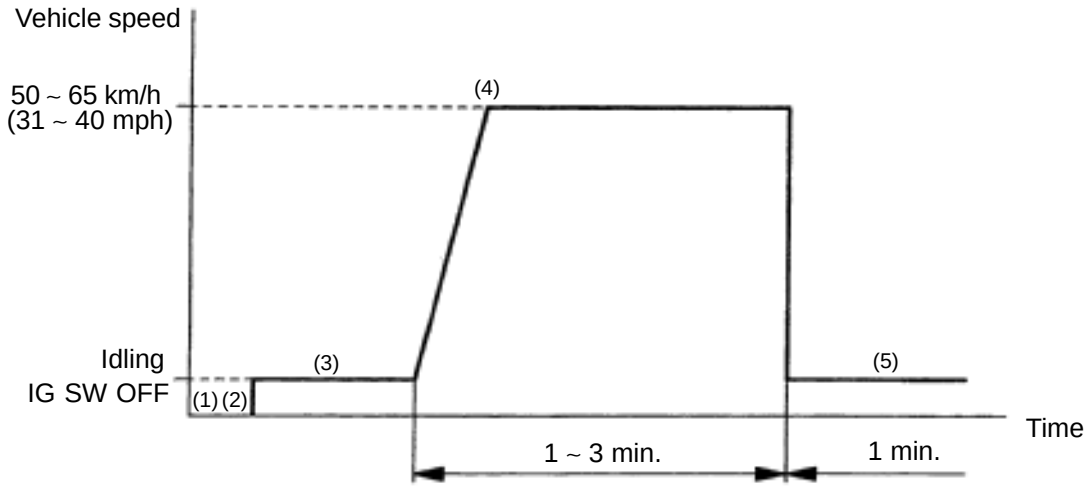

(1) Connect the TOYOTA hand–held tester to the DLC3.
(2) Switch the TOYOTA hand–held tester from normal mode to check mode (See page DI–3).
(3) Start the engine and warm it up with all accessory switches OFF.
(4) Drive the vehicle at 50 ~ 65 km/h (31 ~ 40 mph) for 1 ~ 3 min. to warm up the heated oxygen sensor.
(5) Let the engine idle for 1 min.
(6) Perform steps (3) to (5) three times.
HINT:
If a malfunction exists, the MIL will light up during step (6).
NOTICE:
If the conditions in this test are not strictly followed, detection of the malfunction will not be possible. If you do not have a TOYOTA hand–held tester, turn the ignition switch OFF after performing steps (3) to (6), then perform steps (3) to (6) again.

INSPECTION PROCEDURE

HINT:
Read freeze frame data using TOYOTA hand–held tester or OBD II scan tool. Because freeze frame records the engine conditions when the malfunction is detected, when troubleshooting it is useful for determining whether the vehicle was running or stopped, the engine warmed up or not, the air–fuel ratio lean or rich, etc. at the time of the malfunction.

1	**Are there any other codes (besides DTC P0130) being output?**

YES → **Go to relevant DTC chart.**

NO

2	**Check the output voltage of heated oxygen sensor during idling.**

PREPARATION:

Warm up the heated oxygen sensor the engine at 2,500 rpm for approx. 90 sec.

CHECK:

Use the OBD II scan tool or TOYOTA hand–held tester to read the output voltage of the heated oxygen sensor during idling.

OK:

Heated oxygen sensor output voltage:

Alternates repeatedly between less than 0.4 V and more than 0.55 V (See the following table).

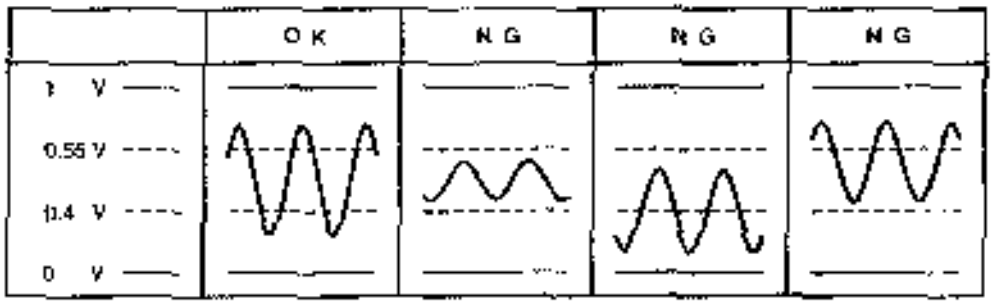

OK	**Go to step 8.**

NG

3	**Check for open and short in harness and connector between ECM and oxygen sensor (See page IN–31).**

NG	**Repair or replace harness or connector.**

OK

4	Check air induction system (See page SF–1).

NG → Repair or replace.

OK

5	Check EGR system (See page EC–12).

NG → Repair EGR system.

OK

6	Check fuel pressure (See page SF–6).

NG → Check and repair fuel pump, fuel pipe line and filter (See page SF–1).

OK

7	Check injector injection (See page SF–23).

NG → Replace injector.

OK

Replace oxygen sensor (bank 1 sensor 1).

8	Perform confirmation driving pattern (See page DI–152).

Go

9	Is there DTC P0130 being output again?

NO → Check for intermittent problems (See page DI–3).

YES

Check and Replace ECM (See page IN–31).

DI4NF–01

DTC	P0133	Heated Oxygen Sensor Circuit Slow Response (Bank 1 Sensor 1) (Ex. CA Spec.)

CIRCUIT DESCRIPTION

Refer to DTC P0125 (Insufficient Coolant Temp. for Closed Loop Fuel Control (Except California Spec.)) on page DI–55.

DTC No.	DTC Detecting Condition	Trouble Area
P0133	Response time for heated oxygen sensor's voltage output to change from rich to lean, or from lean to rich, is 1 sec. or more during idling after engine is warmed up (2 trip detection logic)	●Heated oxygen sensor ●Fuel trim malfunction

HINT:

Sensor 1 refers to the sensor closer to the engine body.

INSPECTION PROCEDURE

HINT:

Read freeze frame data using TOYOTA hand–held tester or OBD II scantool. Because freeze frame records the engine conditions when the malfunction is detected, when troubleshooting it is useful for determining whether the vehicle was running or stopped, the engine warmed up or not, the air–fuel ratio lean or rich, etc. at the time of the malfunction.

1	**Are there any other codes (besides DTC P0133) being output?**

YES → **Go to relevant DTC chart.**

NO

2	**Check output voltage of heated oxygen sensor during idling.**

PREPARATION:

Warm up the heated oxygen sensor the engine at 2,500 rpm for approx. 90 sec.

CHECK:

Use the OBD II scan tool or TOYOTA hand–held tester to read the output voltage of the heated oxygen sensor during idling.

OK:

Heated oxygen sensor output voltage:

Alternates repeatedly between less than 0.4 V and more than 0.55 V (See the following table).

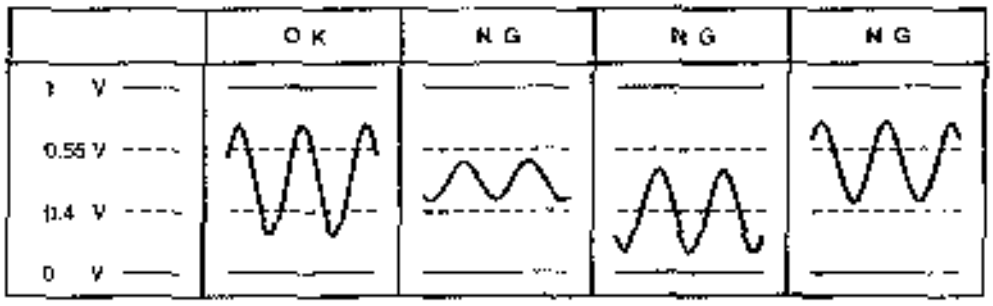

OK	**Go to step 8.**

NG

3	**Check for open and short in harness and connector between ECM and oxygen sensor (See page IN–31).**

NG	**Repair or replace harness or connector.**

OK

4	Check air induction system (See page SF–1).

NG → Repair or replace.

OK

5	Check EGR system (See page EC–12).

NG → Replace EGR system.

OK

6	Check fuel pressure (See page SF–6).

NG → Check and repair fuel pump, fuel pipe line and filter (See page SF–1).

OK

7	Check injector injection (See page SF–23).

NG → Replace injector.

OK

Replace oxygen sensor (bank 1 sensor 1).

8	Perform confirmation driving pattern (See page DI–152).

Go

9	Is there DTC P0133 being output again?

NG → Check for intermittent problems (See page DI–3).

YES

Check and replace ECM (See page IN–31).

DTC	P0135	Heated Oxygen Sensor Heater Circuit Malfunction (Bank 1 Sensor 1) (Ex. CA Spec.)

DTC	P0141	Heated Oxygen Sensor Heater Circuit Malfunction (Bank 1 Sensor 2)

CIRCUIT DESCRIPTION

Refer to DTC P0125 (Insufficient Coolant Temp. for Closed Loop Fuel Control (Except California Spec.)) on page DI–55.

DTC No.	DTC Detecting Condition	Trouble Area
P0135 P0141	When heater operates, heater current exceeds 2 A (2 trip detection logic)	●Open or short in heater circuit of heated oxygen sensor ●Heated oxygen sensor heater ●ECM
P0135 P0141	Heater current of 0.2 A or less when heater operates (2 trip detection logic)	

HINT:

- Sensor 1 refers to the sensor closer to the engine body.
- Sensor 2 refers to the sensor farther away from the engine body.

WIRING DIAGRAM

Refer to DTC P0125 (Insufficient Coolant Temp. for Closed Loop Fuel Control (Except California Spec.)) on page DI–55.

INSPECTION PROCEDURE

HINT:

Read freeze frame data using TOYOTA hand–held tester or OBD II scan tool. Because freeze frame records the engine conditions when the malfunction is detected, when troubleshooting it is useful for determining whether the vehicle was running or stopped, the engine warmed up or not, the air–fuel ratio lean or rich, etc. at the time of the malfunction.

1	Check voltage between terminals HT1, HT2 of ECM connector and body ground.

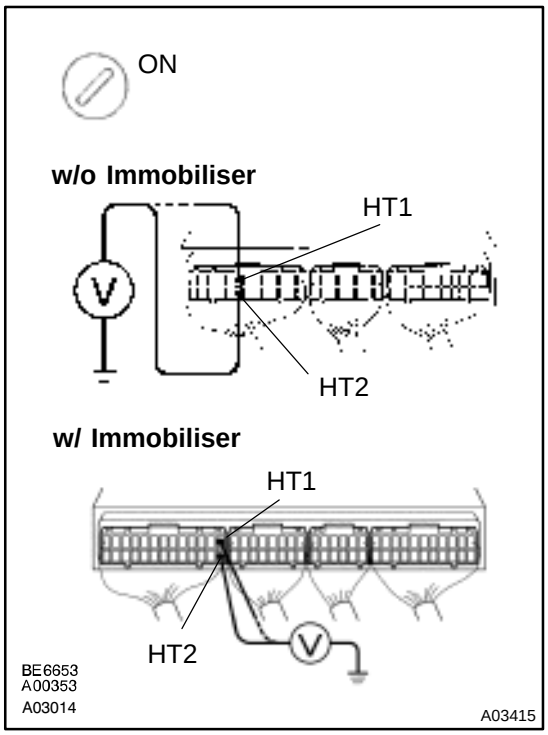

PREPARATION:

(a) Remove the glove compartment (See page SF–64).

(b) Turn the ignition switch ON.

CHECK:

Measure voltage between terminals HT1, HT2 of the ECM connector and body ground.

HINT:

- Connect terminal HT1 to bank 1 sensor 1.
- Connect terminal HT2 to bank 1 sensor 2.

OK:

Voltage: 9 ~ 14 V

OK	Check and replace ECM (See page IN–31).

NG

2	Check resistance of heated oxygen sensor heaters (See pages SF–61, SF–63).

NG	Replace heated oxygen sensor.

OK

Check and repair harness or connector between EFI main relay (Marking: EFI) and heated oxygen sensor, and heated oxygen sensor and ECM. (See page IN–31).

DI00Y–08

DTC	P0136	Heated Oxygen Sensor Circuit Malfunction (Bank 1 Sensor 2)

CIRCUIT DESCRIPTION

Refer to DTC P0125 (Insufficient Coolant Temp. for Closed Loop Fuel Control (Except California Spec.)) on page DI–55.

DTC No.	DTC Detecting Condition	Trouble Area
P0136	Voltage output of heated oxygen sensor remains at 0.45*1/0.40*2 V or more, or 0.60*1/0.50*2 V or less when vehicle is driven at 40 km/h (25 mph) or more after engine is warmed up *1: for California Spec. *2: except California Spec. (2 trip detection logic).	●Heated oxygen sensor

HINT:
Sensor 2 refers to the sensor farther away from the engine body.

WIRING DIAGRAM

Refer to DTC P0125 (Insufficient Coolant Temp. for Closed Loop Fuel Control (Except California Spec.)) on page DI–55.

INSPECTION PROCEDURE

HINT:
Read freeze frame data using TOYOTA hand–held tester or OBD II scan tool. Because freeze frame records the engine conditions when the malfunction is detected, when troubleshooting it is useful for determining whether the vehicle was running or stopped, the engine warmed up or not, the air–fuel ratio lean or rich, etc. at the time of the malfunction.

1	**Are there any other codes (besides DTC P0136) being output?**

YES → **Go to relevant DTC chart.**

NO

2	**Check for open and short in harness and connector between ECM and heated oxygen sensor (See page IN–31).**

NG → **Repair or replace harness or connector.**

OK

3	**Check output voltage of heated oxygen sensor.**

PREPARATION:

(a) Connect the OBD II scan tool or TOYOTA hand–held tester to the DLC3.

(b) Warm up the engine to normal operating temp.

CHECK:

Read voltage output of the heated oxygen sensor when the engine suddenly raced.

HINT:

Perform quick racing to 4,000 rpm 3 min. using the accelerator pedal.

OK:

Heated oxygen sensor output voltage:
Alternates from 0.45*1/0.40*2 V or less to 0.60*1/0.50*2 V or more.

***1: for California Spec.**

***2: except California Spec.**

OK → **Check that each connector is properly connected.**

NG

Replace heated oxygen sensor.

DI1JW–03

DTC	P0171	System too Lean (Fuel Trim) (Only for California Spec.)

DTC	P0172	System too Rich (Fuel Trim) (Only for California Spec.)

CIRCUIT DESCRIPTION

Fuel trim refers to the feedback compensation value compared against the basic injection time. Fuel trim includes short–term fuel trim and long–term fuel trim.

Short–term fuel trim is the short–term fuel compensation used to maintain the air–fuel ratio at its ideal theoretical value.

The signal from the A/F sensor is approximately proportional to the existing air–fuel ratio, and ECM comparing it with the ideal theoretical value, the ECM reduces fuel volume immediately if the air–fuel ratio is rich and increases fuel volume if it is lean.

Long–term fuel trim compensates the deviation from the central value of the short–term fuel trim stored up by each engine tolerance, and the deviation from the central value due to the passage of time and changes of using environment.

If both the short–term fuel trim and long–term fuel trim exceed a certain value, it is detected as a malfunction and the MIL lights up.

DTC No.	DTC Detecting Condition	Trouble Area
P0171	When air–fuel ratio feedback is stable after engine warming up, fuel trim is considerably in error on rich side (2 trip detection logic)	●Gas leakage on exhaust system ●Air intake (loose hoses) ●Fuel line pressure ●Injector blockage ●Manifold absolute pressure sensor ●Engine coolant temp. sensor ●A/F sensor
P0172	When air–fuel ratio feedback is stable after engine warming up, fuel trim is considerably in error on lean side (2 trip detection logic)	●Gas leakage on exhaust system ●Fuel line pressure ●Injector leak, blockage ●Manifold absolute pressure sensor ●Engine coolant temp. sensor ●A/F sensor

HINT:

- When the DTC P0171 is recorded, the actual air–fuel ratio is on the lean side. When DTC P0172 is recorded, the actual air–fuel ratio is on the rich side.
- If the vehicle runs out of fuel, the air–fuel ratio is lean and DTC P0171 is recorded. The MIL then comes on.
- If the total of the short–term fuel trim value and long–term fuel trim value is within ± 38 %, the system is functioning normally.
- The A/F sensor output voltage and the short–term fuel trim value can be read using the OBD II scan tool or TOYOTA hand–held tester.
- The ECM controls the voltage of AF− and AF+ terminals of ECM to the fixed voltage. Therefore, it is impossible to confirm the A/F sensor output voltage without OBD II scan tool or TOYOTA hand–held tester.

- OBD II scan tool (excluding TOYOTA hand–held tester) displays the one fifth of the A/F sensor output voltage which is displayed on the TOYOTA hand–held tester.

INSPECTION PROCEDURE

HINT:

Read freeze frame data using TOYOTA hand–held tester or OBD II scan tool. Because freeze frame records the engine conditions when the malfunction is detected, when troubleshooting it is useful for determining whether the vehicle was running or stopped, the engine warmed up or not, the air–fuel ratio lean or rich, etc. at the time of the malfunction.

1	**Check air induction system (See page SF–1).**

NG → **Repair or replace.**

OK

2	**Check injector injection (See page SF–23).**

NG → **Replace injector.**

OK

3	**Check manifold absolute pressure sensor and engine coolant temp. sensor (See pages SF–53 and SF–49).**

NG → **Repair or replace.**

OK

4	**Check for spark and ignition (See page IG–1).**

NG → **Repair or replace.**

OK

5	Check fuel pressure (See page SF–6).

NG → Check and repair fuel pump, pressure regulator, fuel pipe line and filter.

OK

6	Check gas leakage on exhaust system.

NG → Repair or replace.

OK

Check and replace ECM (See page IN–31).

7	Check output voltage of A/F sensor.

PREPARATION:

(a) Connect the OBD II scan tool or TOYOTA hand–held tester to the DLC3.

(b) Warm up the A/F sensor with the engine at 2,500 rpm for approx. 90 sec.

CHECK:

Read voltage value of A/F sensor on the screen of OBD II scan tool or TOYOTA hand–held tester when you perform all the following conditions.

HINT:

The voltage of AF− terminal of ECM is 3.3 V fixed and AF+ terminal is 3.0 V fixed. Therefore, it is impossible to check the A/F sensor output voltage at the terminals (AF−/AF+) of ECM.

OK:

Condition	A/F Sensor Voltage value
Engine idling	●Not remains at 3.30 V (* 0.660 V) ●Not remains at 3.8 V (* 0.76 V) or more ●Not remains at 2.8 V (* 0.56 V) or less *: When you use OBD II scan tool (excluding TOYOTA hand–held tester)
Engine racing	
Driving at engine speed 1,500 rpm or more and vehicle speed 40 km/h (25 mph) or more, and operate throttle valve open and close	

HINT:

- During fuel enrichment, there is a case that the output voltage of A/F sensor is below 2.8 V (* 0.56 V), it is normal.
- During fuel cut, there is a case that the output voltage of A/F sensor is above 3.8 V (* 0.76 V), it is normally.
- If output voltage of A/F sensor remains at 3.30 V (* 0.660 V) even after performing all the above conditions, A/F sensor circuit may be open.
- If output voltage of A/F sensor remains at 3.8 V (* 0.76 V) or more, or 2.8 V (* 0.56 V) or less even after performing all the above conditions, A/F sensor circuit may be short.

*: When you use the OBD II scan tool (excluding TOYOTA hand–held tester).

OK	Go to step 9.

NG

8	Check for open and short in harness and connector between ECM and oxygen sensor (See page IN–31).

NG → Repair or replace harness or connector.

OK →

Replace A/F sensor.

9	Perform confirmation driving pattern (See page DI–152).

Go →

10	Is there DTC P0171 or P0172 being output again?

YES → Check and replace ECM.

NO →

11	Did vehicle runs out of fuel in the past?

NO → Check for intermittent problems.

YES →

DTC P0171 or P0172 is caused by running out of fuel.

DTC	P0171	System too Lean (Fuel Trim) (Except California Spec.)

DTC	P0172	System too Rich (Fuel Trim) (Except California Spec.)

CIRCUIT DESCRIPTION

Fuel trim refers to the feedback compensation value compared against the basic injection time. Fuel trim includes short–term fuel trim and long–term fuel trim.

Short–term fuel trim is the short–term fuel compensation used to maintain the air–fuel ratio at its ideal theoretical value. The signal from the heated oxygen sensor indicates whether the air–fuel ratio is RICH or LEAN compared to the ideal theoretical value, triggering a reduction in fuel volume if the air–fuel ratio is rich, and an increase in fuel volume if it is lean.

Long–term fuel trim is overall fuel compensation carried out long–term to compensate for continual deviation of the short–term fuel trim from the central value due to individual engine differences, wear over time and changes in the usage environment.

If both the short–term fuel trim and long–term fuel trim are LEAN or RICH beyond a certain value, it is detected as a malfunction and the MIL lights up.

DTC No.	DTC Detecting Condition	Trouble Area
P0171	When air–fuel ratio feedback is stable after engine warming up, fuel trim is considerably in error on RICH side (2 trip detection logic)	●Gas leakage on exhaust system ●Air intake (hose loose) ●Fuel line pressure ●Injector blockage ●Heated oxygen sensor (bank 1 sensor 1) ●Manifold absolute pressure sensor ●Engine coolant temp. sensor
P0172	When air–fuel ratio feedback is stable after engine warming up, fuel trim is considerably in error on LEAN side (2 trip detection logic)	●Gas leakage on exhaust system ●Fuel line pressure ●Injector leak, blockage ●Heated oxygen sensor (bank 1 sensor 1) ●Manifold absolute pressure sensor ●Engine coolant temp. sensor

HINT:

- When the DTC P0171 is recorded, the actual air–fuel ratio is on the LEAN side. When DTC P0172 is recorded, the actual air–fuel ratio is on the RICH side.
- If the vehicle runs out of fuel, the air–fuel ratio is LEAN and DTC P0171 is recorded. The MIL then comes on.
- If the total of the short–term fuel trim value and long–term fuel trim value is within ± 38 %, the system is functioning normally.
- The heated oxygen sensor (bank 1 sensor 1) output voltage and the short–term fuel trim value can be read using the OBD II scan tool or TOYOTA hand–held tester.

INSPECTION PROCEDURE

HINT:

Read freeze frame data using TOYOTA hand–held tester or OBD II scan tool. Because freeze frame records the engine conditions when the malfunction is detected, when troubleshooting it is useful for determining whether the vehicle was running or stopped, the engine warmed up or not, the air–fuel ratio lean or rich, etc. at the time of the malfunction.

1	**Check air induction system (See page SF–1).**

NG → **Repair or replace.**

OK

2	**Check injector injection (See page SF–23).**

NG → **Replace injector.**

OK

3	**Check manifold absolute pressure sensor and engine coolant temp. sensor (See pages SF–53 and SF–49).**

NG → **Repair or replace.**

OK

4	**Check for spark and ignition (See page IG–1).**

NG → **Repair or replace.**

OK

5	Check fuel pressure (See page SF–6).

NG → Check and repair fuel pump, pressure regulator, fuel pipe line and filter.

OK

6	Check gas leakage on exhaust system.

NG → Repair or replace.

OK

Check and replace ECM (See page IN–31).

7	**Check the output voltage of heated oxygen sensor during idling.**

PREPARATION:

Warm up the heated oxygen sensor the engine at 2,500 rpm for approx. 90 sec.

CHECK:

Use the OBD II scan tool or TOYOTA hand–held tester to read the output voltage of the heated oxygen sensor during idling.

OK:

Heated oxygen sensor output voltage:

Alternates repeatedly between less than 0.4 V and more than 0.55 V (See the following table).

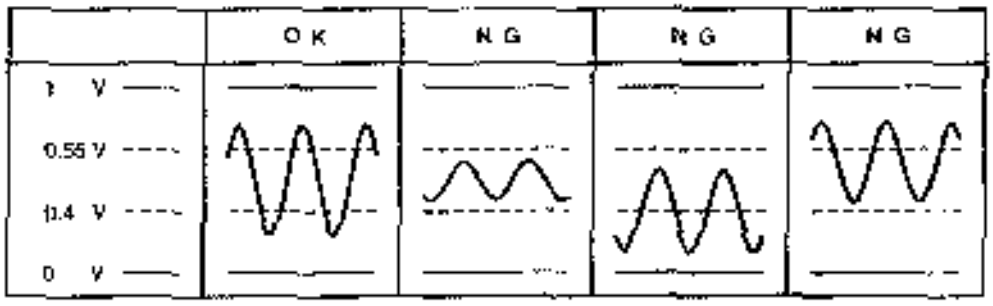

P18349

OK → **Go to step 9.**

NG

8	**Check for open and short in harness and connector between ECM and oxygen sensor (See page IN–31).**

NG → **Repair or replace harness or connector.**

OK

Replace oxygen sensor.

9	Perform confirmation driving pattern (See page DI–66).

Go

10	Is there DTC P0171 or P0172 being output again?

YES → Check and replace ECM.

NO

11	Did vehicle runs out of fuel in the past?

NO → Check for intermittent problems.

YES

DTC P0171 or P0172 is caused by running out of fuel.

DI011–07

DTC	P0300	Random/Multiple Cylinder Misfire Detected

DTC	P0301	Cylinder 1 Misfire Detected

DTC	P0302	Cylinder 2 Misfire Detected

DTC	P0303	Cylinder 3 Misfire Detected

DTC	P0304	Cylinder 4 Misfire Detected

CIRCUIT DESCRIPTION

Misfire: The ECM uses the crankshaft position sensor and camshaft position sensor to monitor changes in the crankshaft rotation for each cylinder.

The ECM counts the number of times the engine speed change rate indicates that misfire has occurred. And when the misfire rate equals or exceeds the count indicating that the engine condition has deteriorated, the MIL lights up.

If the misfire rate is high enough and the driving conditions will cause catalyst overheating, the MIL blinks when misfiring occurs.

DTC No.	DTC Detecting Condition	Trouble Area
P0300 P0301 P0302 P0303 P0304	Misfiring of random cylinders is detected during any particular 200 or 1,000 revolutions For any particular 200 revolutions for engine, misfiring is detected which can cause catalyst overheating (This causes MIL to blink)	●Ignition system ●Injector ●Fuel line pressure ●EGR ●Compression pressure ●Valve clearance not to specification ●Valve timing ●Manifold absolute pressure sensor ●Engine coolant temp. sensor ●Open or short in engine wire ●Connector connection ●ECM

HINT:

When the 2 or more codes for a misfiring cylinder are recorded repeatedly but no random misfire code is recorded, it indicates that the misfires were detected and recorded at different times.

WIRING DIAGRAM

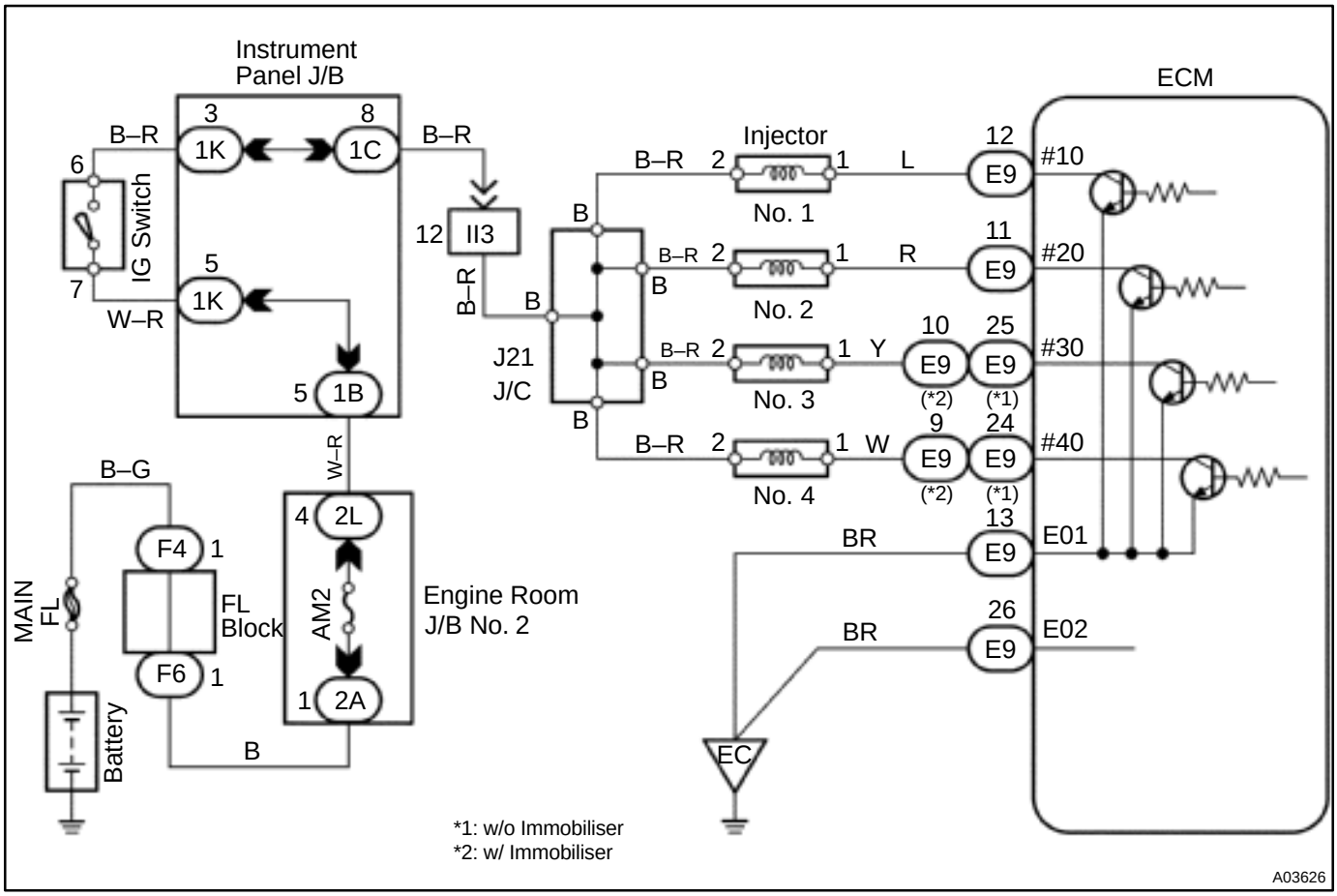

CONFIRMATION DRIVING PATTERN

(1) Connect the TOYOTA hand–held tester or OBD II scan tool.
(2) Record DTC and the freeze frame data.
(3) Use the TOYOTA hand–held tester to set to Check Mode. (See page DI–3)
(4) Drive the vehicle several times with the engine speed, load and its surrounding range shown with ENGINE SPD, CALC LOAD in the freeze frame data or MISFIRE RPM, MISFIRE LOAD in the data list. If you have no TOYOTA hand–held tester, turn the ignition switch OFF after the symptom is simulated the first time. Then repeat the simulation process again.

HINT:
In order to memorize DTC of misfire, it is necessary to drive around MISFIRE RPM, MISFIRE LOAD in the data list for the following period of time.

Engine Speed	Time
Idling	3 minutes 30 seconds or more
1000 rpm	3 minutes or more
2000 rpm	1 minutes 30 seconds or more
3000 rpm	1 minutes or more

(5) Check whether there is misfire or not by monitoring DTC and the freeze frame data. After that, record them.
(6) Turn the ignition switch OFF and wait at least 5 seconds.

INSPECTION PROCEDURE

HINT:

- If is the case that DTC besides misfire is memorized simultaneously, first perform the troubleshooting for them.
- Read freeze frame data using TOYOTA hand–held tester or OBD II scan tool. Because freeze frame data records the engine conditions when the malfunction is detected, when troubleshooting it is useful for determining whether the vehicle was running or stopped, the engine warmed up or not, the air–fuel ratio lean or rich, etc. at the time of the malfunction.
- When the vehicle is brought to the workshop and the misfire is not occurred, misfire can be confirmed by reproducing the condition or freeze frame data. Also, after finishing the repair, confirm that there is no misfire. (See the confirmation driving pattern)
- When either of SHORT FT #1, LONG FT #1, SHORT FT #2 or LONG FT #2 in the freeze frame data is besides the range of ±20%, there is a possibility that the air–fuel ratio is inclining either to ”rich” (–20% or less) or ”lean” (+20% or more).
- When COOLANT TEMP in the freeze frame data is less than 80˚C (176˚F), there is a possibility or misfire only during warming up.
- In the case that misfire cannot be reproduced, the reason may be because of the driving with lack or fuel, the use of improper fuel, a stain of ignition plug, and etc.

1	**Check wire harness, connector and vacuum hose in engine room.**

CHECK:

(a) Check the connection conditions of the wire harness and connector.

(b) Check the disconnection, piping and break of the vacuum hose.

NG → **Repair or replace, then confirm that there is no misfire (See the confirmation driving pattern).**

OK

2	Check spark plug and spark of misfiring cylinder.

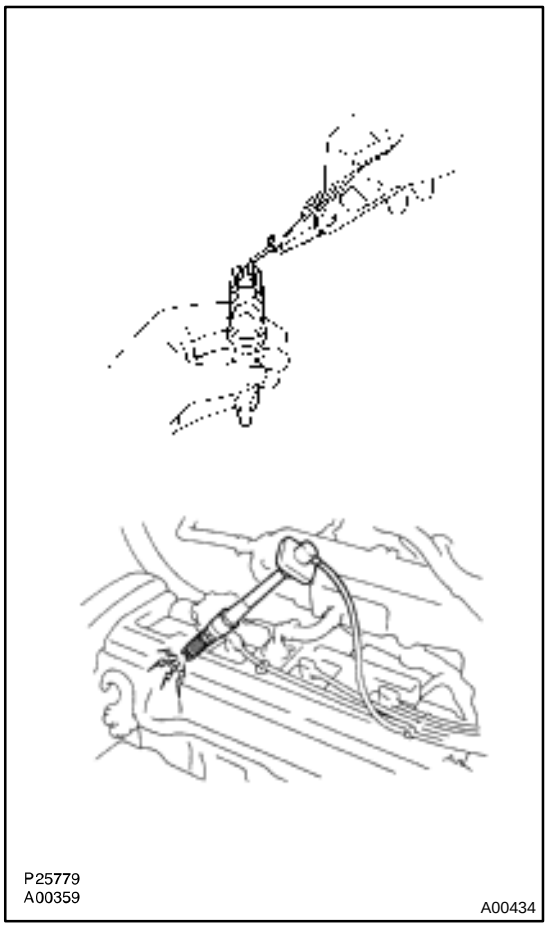

PREPARATION:

(a) Disconnect the high–tension cord from the spark plug.
(b) Remove the spark plug.

CHECK:

(a) Check the plug type.
(b) Check the electrode for carbon deposits.
(c) Check the electrode gap.

OK:

(a) Platinum–tipped spark plugs with twin ground electrodes.
Recommended spark plug:
ND made: PK20TR11
NGK made: BKR6EKPB–11
(b) No large carbon deposit present.
Not wet with gasoline or oil.
(c) Electrode gap: 1.1 mm (0.043 in.)

PREPARATION:

(a) Install the spark plug to the high–tension code.
(b) Disconnect the injector connector.
(c) Ground the spark plug.

CHECK:

Check if spark occurs while the engine is being cracked.

NOTICE: To prevent excess fuel being injected from the injectors during this test, don't crank the engine for more than 5 ~ 10 seconds at a time.

OK:

Spark jumps across electrode gap.

NG → **Replace or check ignition system (See page IG–1).**

OK

3	Check voltage of ECM terminal for injector of failed cylinder.

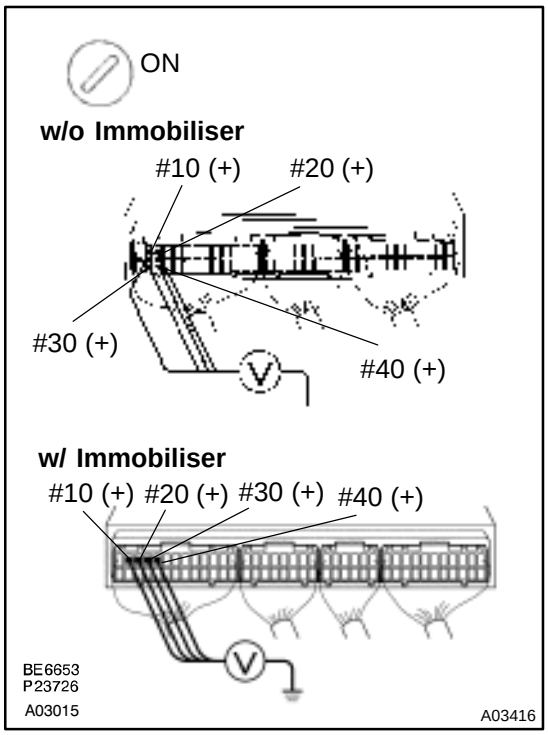

PREPARATION:

(a) Remove the glove compartment (See page SF–64).

(b) Turn the ignition switch ON.

CHECK:

Measure voltage between applicable terminal of the ECM connector and body ground.

OK:

Voltage: 9 ~ 14 V

Reference: INSPECTION USING OSCILLOSCOPE
INJECTOR SIGNAL WAVEFORM

With the engine idling, measure between terminals #10 ~ #40 and E01 of the ECM connector.

HINT:

The correct waveforms are shown.

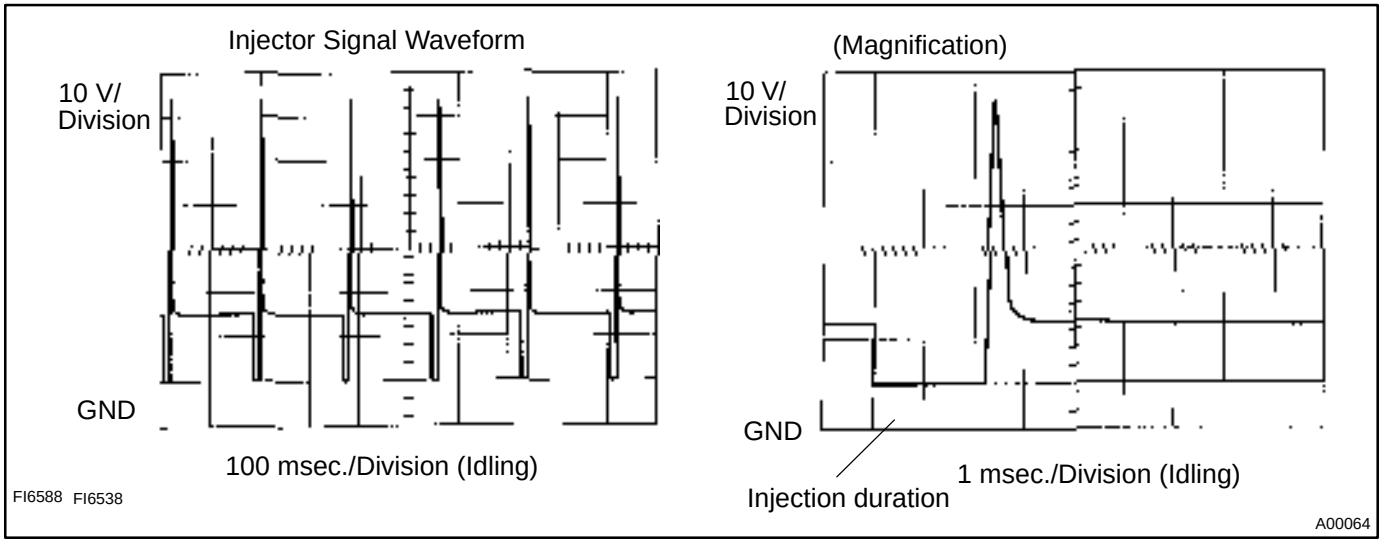

OK	Go to step 4.

NG

4	Check resistance of injector of misfiring cylinder (See page SF–20).

NG → Replace injector.

OK →

Check for open and short in harness and connector between injector and ECM (See page IN–31).

5	Check fuel pressure (See page SF–6).

NG → Check and repair fuel pump, pressure regulator, fuel pipe line and filter.

OK →

6	Check injector injection (See page SF–23).

NG → Replace injector.

OK →

7	Check EGR system (See page EC–12).

NG → Repair EGR system.

OK →

8	**Check manifold absolute pressure sensor and engine coolant temp. sensor (See pages SF–53 AND SF–49).**

NG → **Repair or replace.**

OK

Check compression pressure, valve clearance and valve timing (See pages EM–3, EM–4 AND EM–23).

DI012–10

DTC	P0325	Knock Sensor 1 Circuit Malfunction

CIRCUIT DESCRIPTION

The knock sensor is fitted to the cylinder block to detect engine knocking. This sensor contains a piezoelectric element which generates a voltage when it becomes deformed, which occurs when the cylinder block vibrates due to knocking. If engine knocking occurs, ignition timing is retarded to suppress it.

DTC No.	DTC Detecting Condition	Trouble Area
P0325	No knock sensor 1 signal to ECM with engine speed, 1,200 rpm or more (2 trip detection logic)	●Open or short in knock sensor 1 circuit ●Knock sensor 1 (looseness) ●ECM

HINT:
If the ECM detects above diagnosis conditions, it operates the fail safe function in which the corrective retard angle value is set to the maximum value.

WIRING DIAGRAM

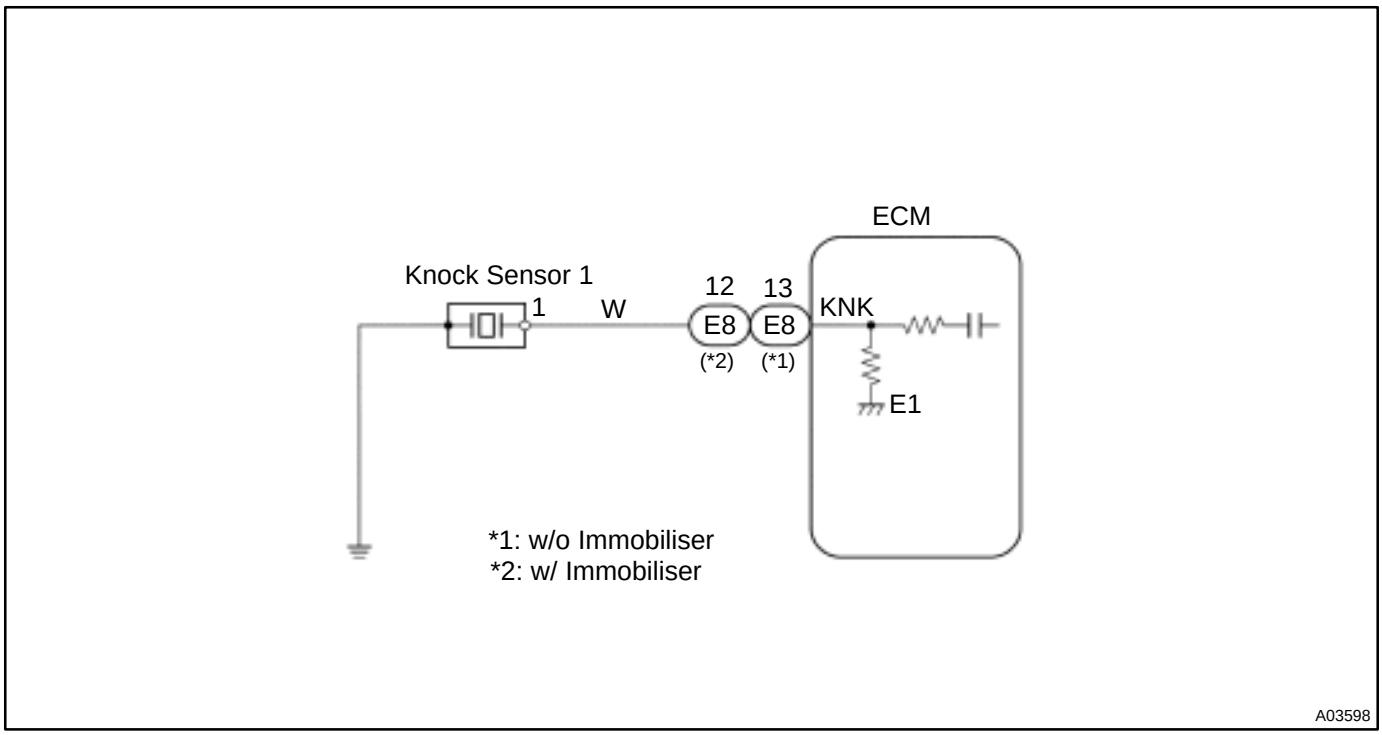

INSPECTION PROCEDURE

HINT:
Read freeze frame data using TOYOTA hand–held tester or OBD II scan tool. Because freeze frame records the engine conditions when the malfunction is detected, when troubleshooting it is useful for determining whether the vehicle was running or stopped, the engine warmed up or not, the air–fuel ratio lean or rich, etc. at the time of the malfunction.

1	**Check continuity between terminal KNK of ECM connector and body ground.**

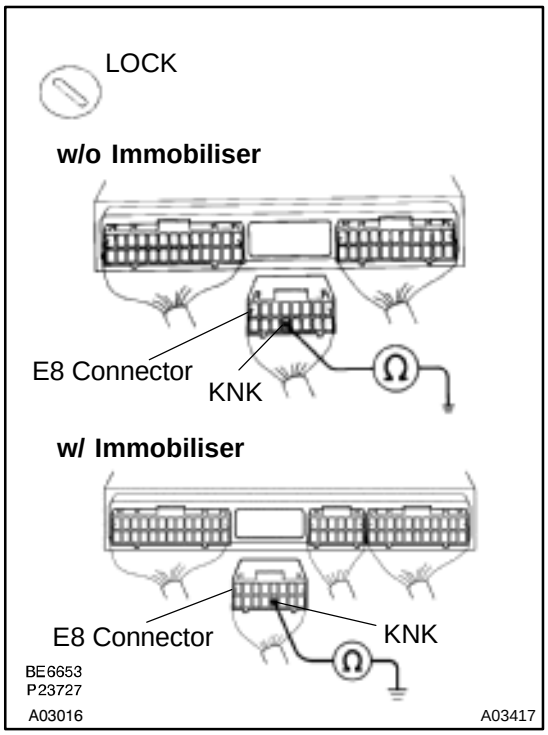

PREPARATION:

(a) Remove the glove compartment (See page SF–64).

(b) Disconnect the E8 connector from the ECM.

CHECK:

Measure resistance between terminal KNK of the ECM connector and body ground.

OK:

Resistance: 1 MΩ or higher

OK	**Go to step 3.**

NG

2	**Check knock sensor 1 (See page SF–57).**

NG	**Replace knock sensor 1.**

OK

3	**Check for open and short in harness and connector between ECM and knock sensor 1 (See page IN–31).**

NG	**Repair or replace harness or connector.**

OK

4	**Does malfunction disappear when good knock sensor 1 is installed?**

YES → **Replace knock sensor 1.**

NO

Check and replace ECM (See page IN–31).

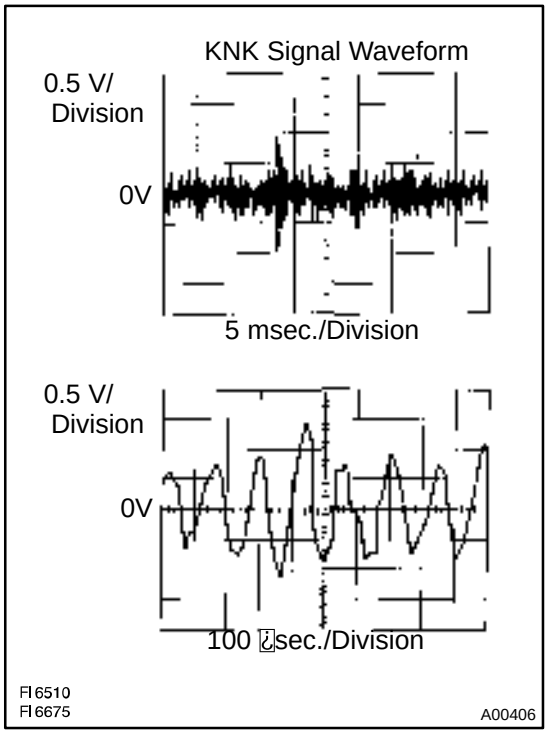

Reference: INSPECTION USING OSCILLOSCOPE

With the engine racing (4,000 rpm), measure between terminal KNK of the ECM connector and body ground.

HINT:

The correct waveforms are as shown.

Spread the time on the horizontal axis, and confirm that period of the wave is 132 µsec.

(Normal mode vibration frequency of knock sensor: 7.6 kHz)

HINT:

If normal mode vibration frequency is not 7.6 kHz the sensor is malfunctioning.

DTC	P0335	Crankshaft Position Sensor ”A” Circuit Malfunction

CIRCUIT DESCRIPTION

Crankshaft position sensor (NE signal) consist of a signal plate and pickup coil.
The NE signal plate has 34 teeth and is mounted on the crankshaft. The NE signal sensor generates 34 signals of every engine revolution. The ECM detects the standard crankshaft angle based on the G signals, and the actual crankshaft angle the engine speed by the NE signals.

DTC No.	DTC Detecting Condition	Trouble Area
P0335	No crankshaft position sensor signal to ECM during cranking (2 trip detection logic)	●Open or short in crankshaft position sensor circuit. ●Crankshaft position sensor ●Starter ●ECM
	No crankshaft position sensor signal to ECM with engine speed 600 rpm or more (2 trip detection logic)	

WIRING DIAGRAM

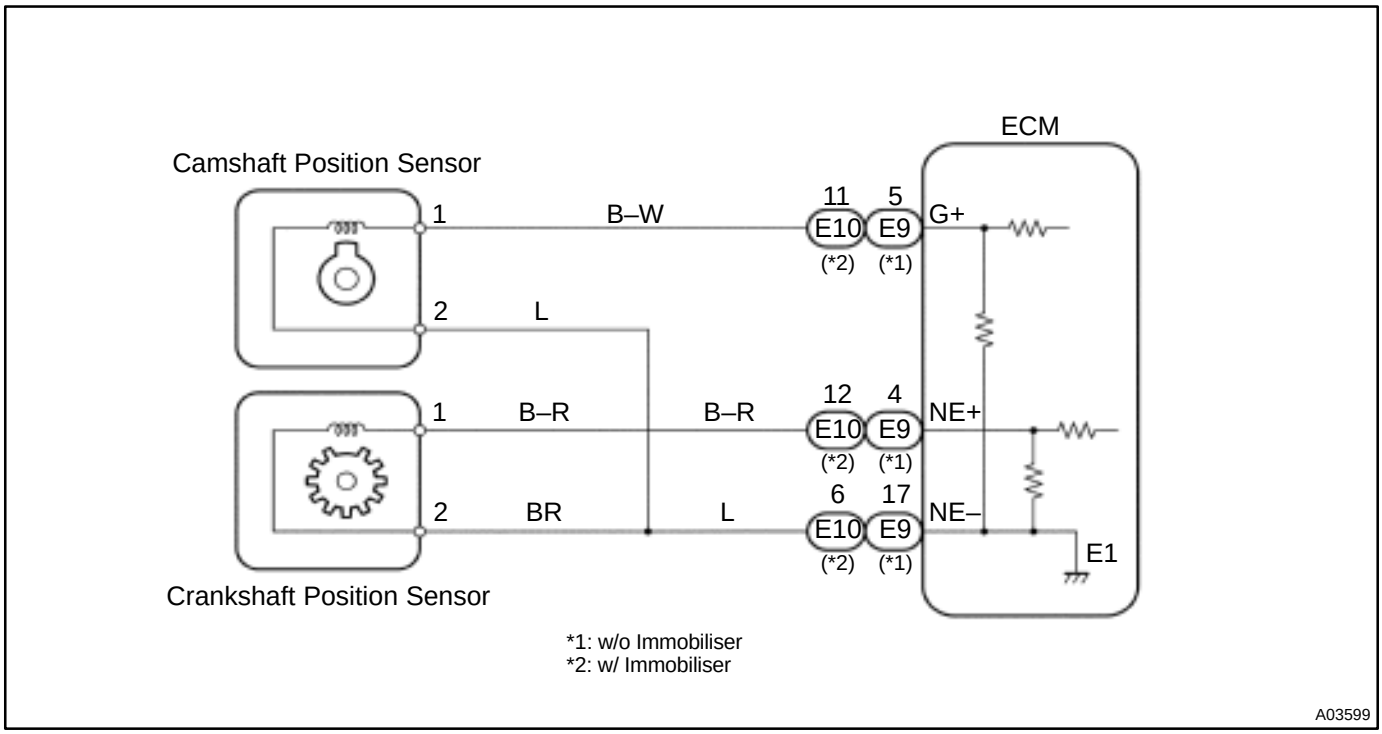

INSPECTION PROCEDURE

HINT:

- Perform troubleshooting of DTC 335 first. If notrouble is found, troubleshoot the following mechanical system.
- Read freeze frame data using TOYOTA hand–held tester or OBD II scan tool. Because freeze frame records the engine conditions when the malfunction is detected, when troubleshooting it is useful for determining whether the vehicle was running or stopped, the engine warmed up or not, the air–fuel ratio lean or rich, etc. at the time of the malfunction.

1	**Check resistance of crankshaft position sensor (See page IG–1).**

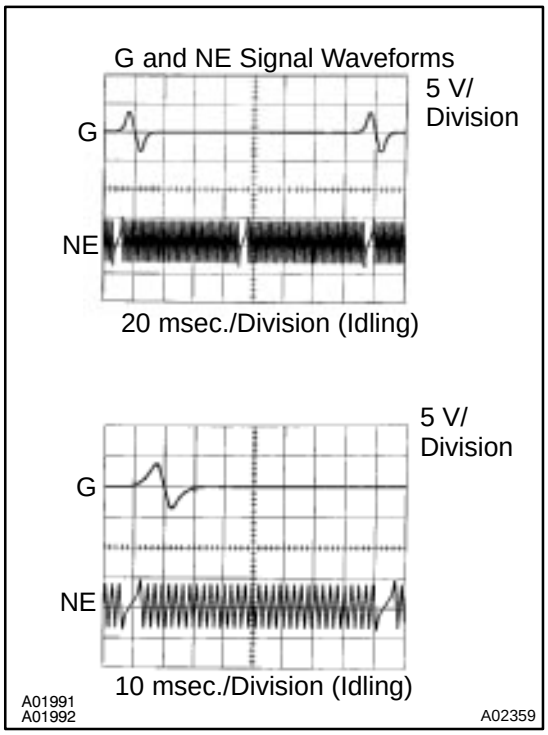

Reference: INSPECTION USING OSCILLOSCOPE

During cranking or idling, check between terminals G and G–, NE and NE– of the ECM

HINT:

The correct waveforms are as shown.

NG	**Replace crankshaft position sensor.**

OK

2	**Check for open and short in harness and connector between ECM and crankshaft position sensor (See page IN–31).**

NG	**Repair or replace harness or connector.**

OK

3	Inspect sensor installation and teeth of crankshaft timing pulley (See pages IG–10 and EM–15).

NG → Tighten the sensor. Replace crankshaft timing pulley.

OK →

Check and replace ECM (See page IN–31).

DTC	P0340	Camshaft Position Sensor Circuit Malfunction

CIRCUIT DESCRIPTION

Camshaft position sensor (G signal) consist of signal plate and pickup coil.
The G signal plate has one tooth on its outer circumference and is mounted on the exhaust camshaft.
When the camshafts rotate, the protrusion on the signal plate and the air gap on the pickup coil change, causing fluctuations in the magnetic field and generating an electromotive force in the pickup coil.
The NE signal plate has 34 teeth and is mounted on the crankshaft. The NE signal sensor generates 34 signals for every engine revolution. The ECM detects the standard crankshaft angle based on the G signals and the actual crankshaft angle and the engine speed by the NE signals.

DTC No.	DTC Detecting Condition	Trouble Area
P0340	No camshaft position sensor signal to ECM during cranking (2 trip detection logic)	●Open or short in camshaft position sensor circuit ●Camshaft position sensor ●Distributor ●Starter ●ECM
	No camshaft position sensor signal to ECM with engine speed 600 rpm or more	

WIRING DIAGRAM

Refer to DTC P0335 (Crankshaft Position Sensor ”A” Circuit Malfunction) on page DI–100.

INSPECTION PROCEDURE

HINT:

Read freeze frame data using TOYOTA hand–held tester or OBD II scan tool. Because freeze frame records the engine conditions when the malfunction is detected, when troubleshooting it is useful for determining whether the vehicle was running or stopped, the engine warmed up or not, the air–fuel ratio lean or rich, etc. at the time of the malfunction.

1	**Check resistance of camshaft position sensor (signal generator) (See page IG–1).**

Reference: INSPECTION USING OSCILLOSCOPE

Refer to DTC P0335 (Crankshaft Position Sensor ”A” Circuit Malfunction) on page DI–100.

NG → **Replace camshaft position sensor.**

OK

2	**Check for open and short in harness and connector between ECM and camshaft position sensor (See page IN–31).**

NG → **Repair or replace harness or connector.**

OK

3	**Inspect sensor installation and tooth of camshaft timing pulley (See pages IG–9 and EM–17).**

NG → **Tighten the sensor. Replace camshaft timing pulley.**

OK

Check and replace ECM (See page IN–31).

DTC	P0401	Exhaust Gas Recirculation Flow Insufficient Detected

CIRCUIT DESCRIPTION

The EGR system recirculates exhaust gas, which is controlled to the proper quantity to suit the driving conditions, into the intake air mixture to slow down combustion, reduce the combustion temperature and reduce NOx emissions. The amount of EGR is regulated by the EGR vacuum modulator according to the engine load.

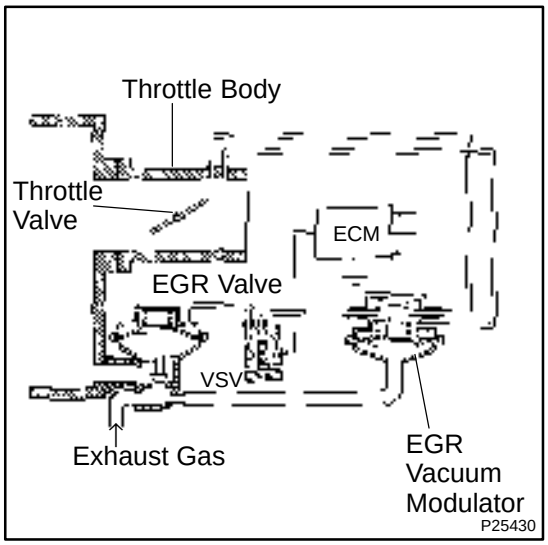

If even one of the following conditions is fulfilled, the VSV is turned ON by a signal from the ECM.
This results in atmospheric air acting on the EGR valve, closing the EGR valve and shutting off the exhaust gas (EGR cut–off).
Under the following conditions, EGR is cut to maintain driveability.

- Before engine is warmed up.
- During deceleration (throttle valve closed).
- Light engine load (amount of intake air very small).
- Engine idling.
- Engine speed over 4,400 rpm.
- High engine load (amount of intake air very large).

DTC No.	DTC Detecting Condition	Trouble Area
P0401	After engine is warmed up, intake manifold absolute pressure is larger than value calculated by ECM while EGR system is ON (2 trip detection logic)	●EGR valve stuck closed ●Open or short in VSV circuit for EGR ●Vacuum or EGR hose disconnected ●Manifold absolute pressure sensor ●VSV for EGR open or close malfunction ●ECM

WIRING DIAGRAM

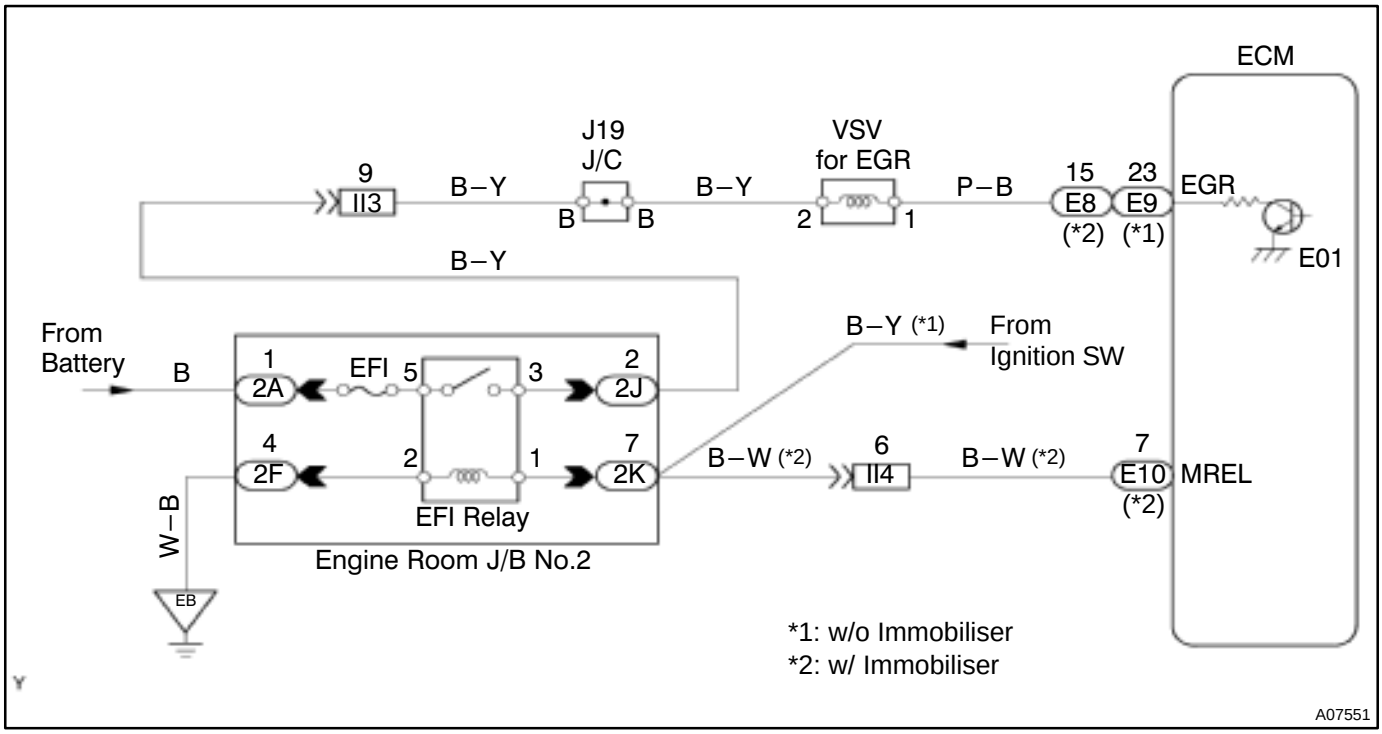

SYSTEM CHECK DRIVING PATTERN

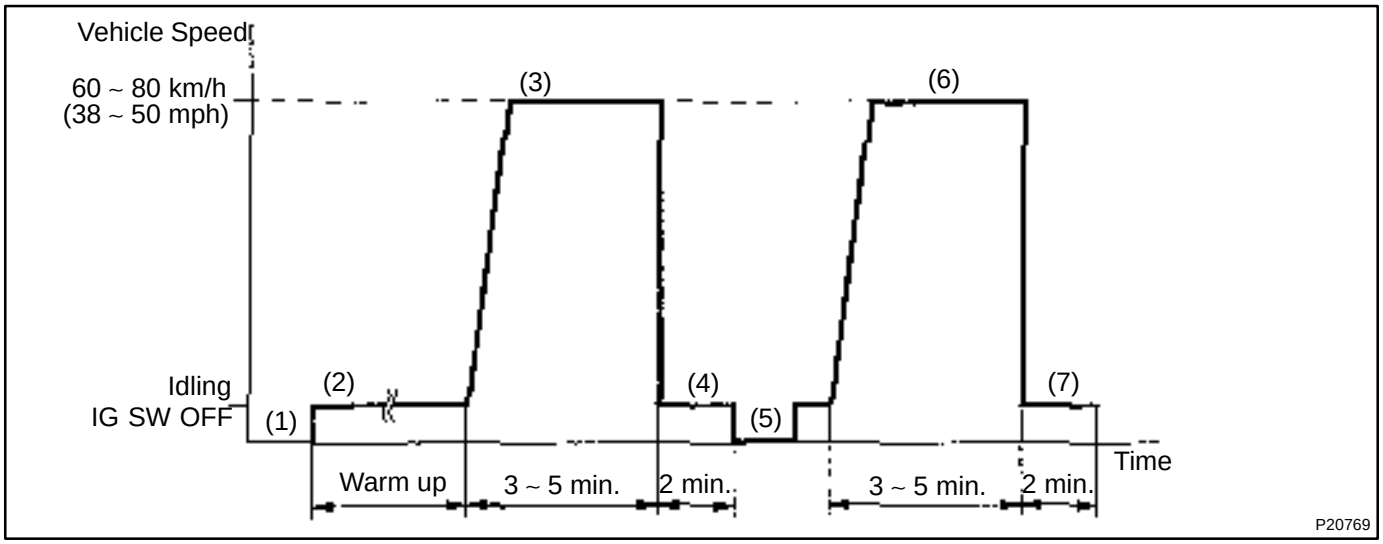

(1) Connect the OBD II scan tool or TOYOTA hand–held tester to the DLC3.
(2) Start and warm up the engine with all accessories switched OFF.
(3) Run the vehicle at 60 ~ 80 km/h (38 ~ 50 mph) for 3 min. or more.
(4) Idle the engine for about 2 min.
(5) Do steps (3) and (4) again.
(6) Stop at safe place and turn the ignition switch OFF.
(7) Do steps (2) to (5) again.
(8) Check the READINESS TESTS mode on the OBD II scan tool or TOYOTA hand–held tester.
If COMPL is displayed and the MIL does not light up, the system is normal.
If INCMPL is displayed and the MIL does not light up, run the vehicle again and check it.
HINT:
INCMPL is displayed when either condition (a) or (b) exists.
(a) The system check is incomplete.
(b) There is a malfunction in the system.
If there is a malfunction in the system, the MIL will light up after steps (2) to (5) above are done. (2 trip detection logic)

INSPECTION PROCEDURE

HINT:

- If DTC P0105 (Manifold Absolute Pressure/Barometric Pressure Circuit Malfunction), P0106 (Manifold Absolute Pressure/Barometric Pressure Circuit Range/Performance Problem) and P0401 (Exhaust Gas Recirculation Flow Insufficient Detected) are output simultaneously, perform troubleshooting of DTC P0105 first.
- If DTC P0401 (Exhaust Gas Recirculation Flow Insufficient Detected) and P0402 (Exhaust Gas Recirculation Flow Excessive Detected) are output simultaneously, perform troubleshooting of DTC P0402 first.
- Read freeze frame data using TOYOTA hand–held tester or OBD II scan tool. Because freeze frame records the engine conditions when the malfunction is detected, when troubleshooting it is useful for determining whether the vehicle was running or stopped, the engine warmed up or not, the air–fuel ratio lean or rich, etc. at the time of the malfunction.

TOYOTA hand–held tester:

1	Check connection of the vacuum hose and EGR hose (See page EC–12).

NG → Repair or replace.

OK

2	Check VSV for EGR.

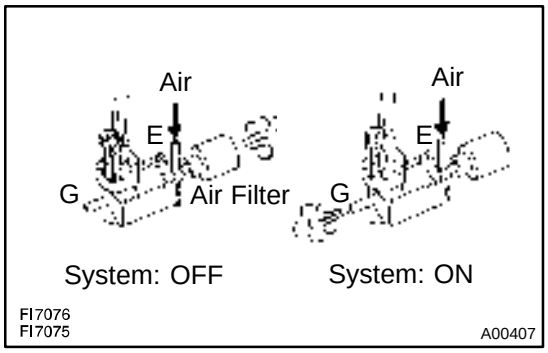

PREPARATION:

(a) Connect the TOYOTA hand–held tester to the DLC3.
(b) Turn the ignition switch ON and push the TOYOTA hand–held tester main switch ON.
(c) Select the ACTIVE TEST mode on the TOYOTA hand–held tester.

CHECK:

Check operation of the VSV when it is operated by the TOYOTA hand–held tester.

OK:

EGR system is OFF:
Air from port E is flowing out through the air filter.
EGR system is ON:
Air from port E is flowing out port G.

OK → Go to step 4.

NG

3	Check operation of the VSV for EGR (See page SF–43).

NG → Replace VSV for EGR.

OK

Check for open and short in harness and connector between engine room J/B No.2 and ECM (See page IN–31).

4	Check EGR system (See page EC–12).

NG → Repair or replace.

OK

5	Check EGR vacuum modulator (See page EC–12).

NG → Repair or replace.

OK

6	Check EGR valve (See page EC–12).

NG → Repair or replace.

OK

7	Check manifold absolute pressure sensor (See page SF–53).

NG → Repair or replace.

OK

Check and replace ECM (See page IN–31).

OBD II scan tool (excluding TOYOTA hand–held tester):

1	**Check connection of vacuum hose and EGR hose (See page EC–12).**

NG → **Repair or replace.**

OK

2	**Check VSV for EGR.**

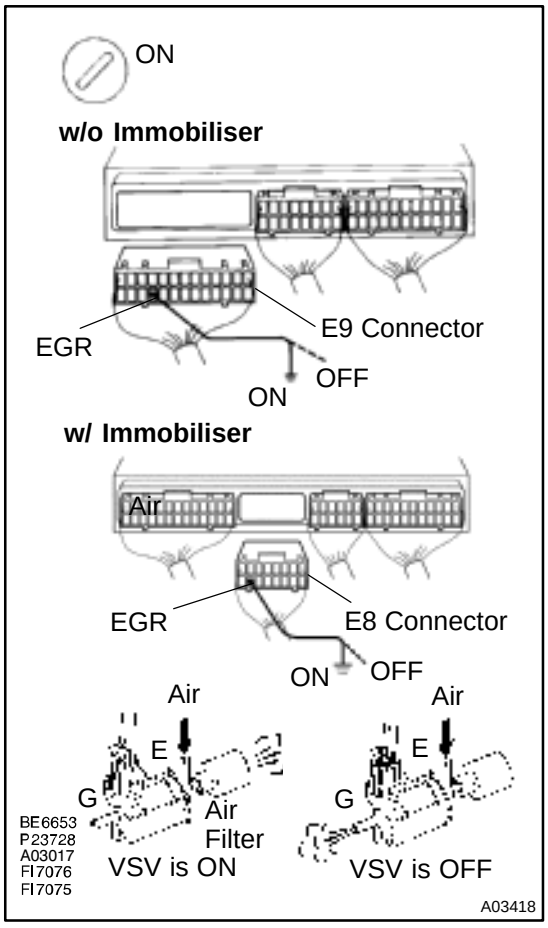

PREPARATION:

(a) Remove the glove compartment (See page SF–64).
(b) Disconnect the E9 connector (w/o immobilizer) or E8 connector (w/ immobilizer) the ECM.
(c) Turn the ignition switch ON.

CHECK:

Check VSV function

(1) Connect between terminal EGR of the ECM connector and body ground (ON).
(2) Disconnect between terminal EGR of the ECM connector and body ground (ON).

OK:

(1) VSV is ON:
Air from port E is flowing out through the air filter.
(2) VSV is OFF:
Air from port E is flowing out port G.

OK → **Go to step 4.**

NG

3	Check operation of VSV for EGR (See page SF–43).

NG → Replace VSV for EGR.

OK

Check for open and short in harness and connector between engine room J/B No.2 and ECM (See page IN–31).

4	Check EGR system (See page EC–12).

NG → Repair or replace.

OK

5	Check EGR vacuum modulator (See page EC–12).

NG → Repair or replace.

OK

6	Check EGR valve (See page EC–12).

NG → Repair or replace.

OK

7	Check manifold absolute pressure sensor (See page SF–53).

NG → Repair and replace.

OK

Check and replace ECM (See page IN–31).

DTC	P0402	Exhaust Gas Recirculation Flow Excessive Detected

CIRCUIT DESCRIPTION

Refer to DTC P0401 (Exhaust Gas Recirculation Flow Insufficient Detected) on page DI–105.

DTC No.	DTC Detecting Condition	Trouble Area
P0402	After engine is warmed up, conditions (a) and (b) continue: (a) Intake manifold absolute pressure is larger than value calculated by ECM while EGR system is ON (b) Misfiring is detected during idling (2 trip detection logic)	●EGR valve stuck open ●Vacuum or EGR hose is connected to wrong post ●Manifold absolute pressure sensor ●ECM

WIRING DIAGRAM

Refer to DTC P0401 (Exhaust Gas Recirculation Flow Insufficient Detected) on DI–105.

SYSTEM CHECK DRIVING PATTEM

Refer to DTC P0401 (Exhaust Gas Recirculation Flow Insufficient Detected) on DI–105.

INSPECTION PROCEDURE

HINT:

- If DTC P0105 (Manifold Absolute Pressure/Barometric Pressure Circuit Malfunction), P0106 (Manifold Absolute Pressure/Barometric Pressure Circuit Range/Performance Problem) and P0402 (Exhaust Gas Recirculation Flow Excessive Detected) are output simultaneously, perform troubleshooting of DTC P0105 first.
- If DTC P0401 (Exhaust Gas Recirculation Flow Insufficient Detected) and P0402 (Exhaust Gas Recirculation Flow Excessive Detected) are output simultaneously, perform troubleshooting of DTC P0402 first.
- Read freeze frame data using TOYOTA hand–held tester or OBD II scan tool. Because freeze frame records the engine conditions when the malfunction is detected, when troubleshooting it is useful for determining whether the vehicle was running or stopped, the engine warmed up or not, the air–fuel ratio lean or rich, etc. at the time of the malfunction.

1	**Check connection of vacuum hose and EGR hose (See page EC–12).**

NG → **Repair or replace.**

OK

2	Check EGR valve (See page EC–12).

NG → Repair or replace.

OK

3	Check VSV for EGR*.

*: If you have TOYOTA hand–held tester, see page DI–105, step 2.
If you have no TOYOTA hand–held tester, see page DI–105, step 2.

OK → Go to step 4.

NG

4	Check operation of VSV for EGR (See page SF–43).

NG → Replace VSV for EGR.

OK

Check for open and short in harness and connector between engine room J/B No.2 and ECM (See page IN–31).

5	Check EGR system (See page EC–12.)

NG → Repair or replace.

OK

6	Check EGR vacuum modulator (See page EC–12).

NG → Repair or replace.

OK

7	Check manifold absolute pressure sensor (See page SF–53).

NG → Repair or replace.

OK

Check and replace ECM (See page IN–31).

DI1JX–03

DTC	P0420	Catalyst System Efficiency Below Threshold (Except California Spec.)

CIRCUIT DESCRIPTION

The ECM compares the waveform of the heated oxygen sensor located before the catalyst with the waveform of the heated oxygen sensor located behind the catalyst to determine whether or not catalyst performance has deteriorated.

Air–fuel ratio feedback compensation keeps the waveform of the heated oxygen sensor before the catalyst repeatedly changing back and forth from rich to lean.

If the catalyst is functioning normally, the waveform of the heated oxygen sensor behind the catalyst switches back and forth between rich and lean much more slowly than the waveform of the heated oxygen sensor before the catalyst.

But when both waveforms change at a similar rate, it indicates that catalyst performance has deteriorated.

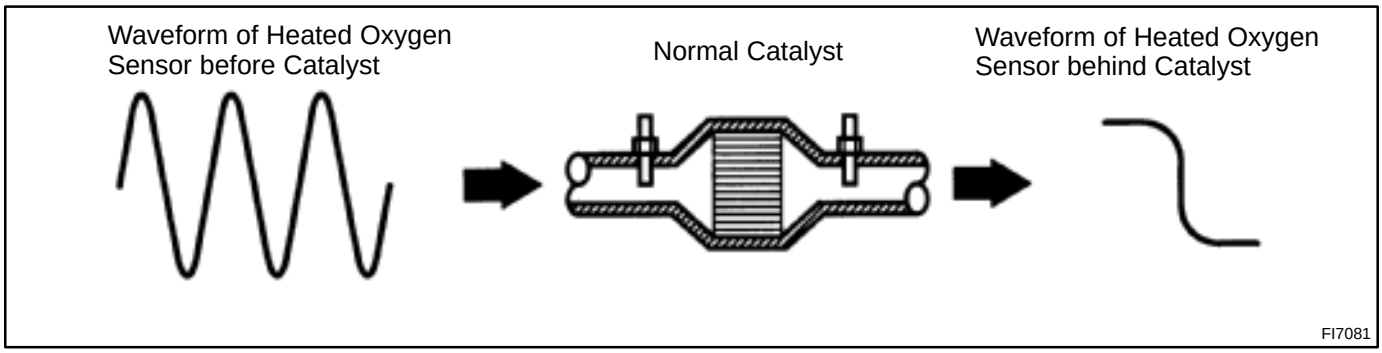

DTC No.	DTC Detecting Condition	Trouble Area
P0420	After engine and catalyst are warmed up, and while vehicle is driven within set vehicle and engine speed range, waveforms of heated oxygen sensors (bank 1 sensor 1, 2) have same amplitude (2 trip detection logic)	●Three–way catalytic converter ●Open or short in heated oxygen sensor circuit ●Heated oxygen sensor

CONFIRMATION ENGINE RACING PATTERN

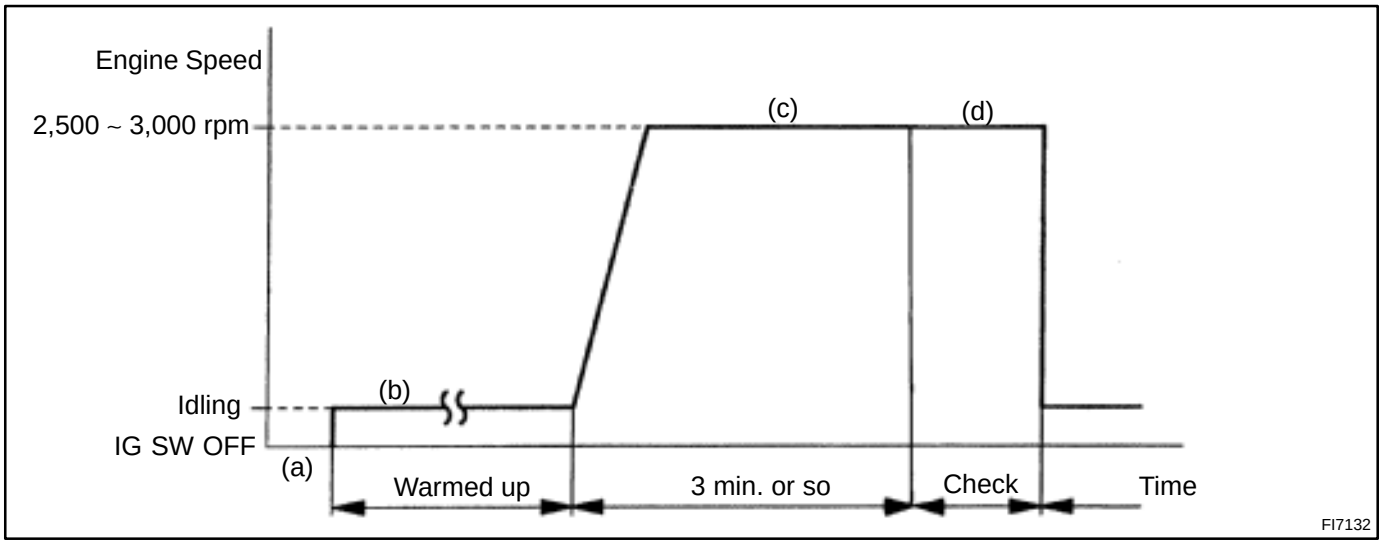

(a) Connect the TOYOTA hand–held tester to the DLC3, or connect the probe of the oscilloscope between terminals OX1, OX2 and E1 of the ECM connector.
(b) Start engine and warm it up with all accessories switched OFF until water temp. is stable.
(c) Race the engine at 2,500 ~ 3,000 rpm for about 3 min.
(d) After confirming that the waveforms of the heated oxygen sensor (bank 1 sensor 1 (OX1)), oscillate around 0.5 V during feedback to the ECM, check the waveform of the heated oxygen sensor (bank 1 sensor 2 (OX2)).

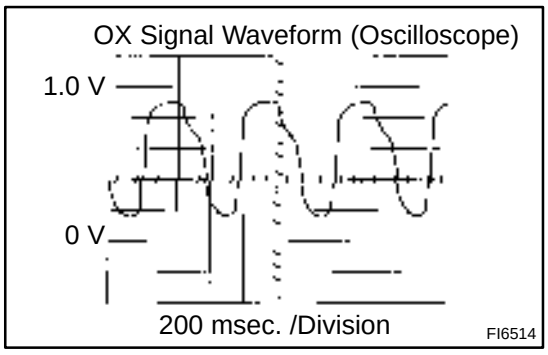

HINT:

- If there is a malfunction in the system, the waveform of the heated oxygen sensor (bank 1 sensor 2 (OX2)) is almost the same as that of the heated oxygen sensor (bank 1 sensor 1 (OX1)) on the left.
- There are some cases where, even though a malfunction exists, the MIL may either light up or not light up.

INSPECTION PROCEDURE

HINT:

Read freeze frame data using TOYOTA hand–held tester or OBD II scan tool. Because freeze frame records the engine conditions when the malfunction is detected, when troubleshooting it is useful for determining whether the vehicle was running or stopped, the engine warmed up or not, the air–fuel ratio lean or rich, etc. at the time of the malfunction.

1	**Are there any other codes (besides DTC P0420) being output?**

YES → **Go to relevant DTC chart.**

NO

2	**Check gas leakage on exhaust system.**

NG → **Repair or replace.**

OK

3	**Check heated oxygen sensor (bank 1 sensor 1) (See page DI–66).**

NG → **Repair or replace.**

OK

4	**Check heated oxygen sensor (bank 1 sensor 2) (See page DI–77).**

NG → **Repair or replace.**

OK

Replace three–way catalytic converter.

DTC	P0420	Catalyst System Efficiency Below Threshold (Only for California Spec.)

CIRCUIT DESCRIPTION

The ECM observes the waveform of the heated oxygen sensor located behind the catalyst to determine whether the catalyst performance has deteriorated.
If the catalyst is functioning normally, the waveform of the heated oxygen sensor located behind the catalyst switches back and forth between rich and lean much more slowly.
When the waveform of the heated oxygen sensor located behind the catalyst alternates flutteringly between rich and lean, it indicates that catalyst performance has deteriorated.

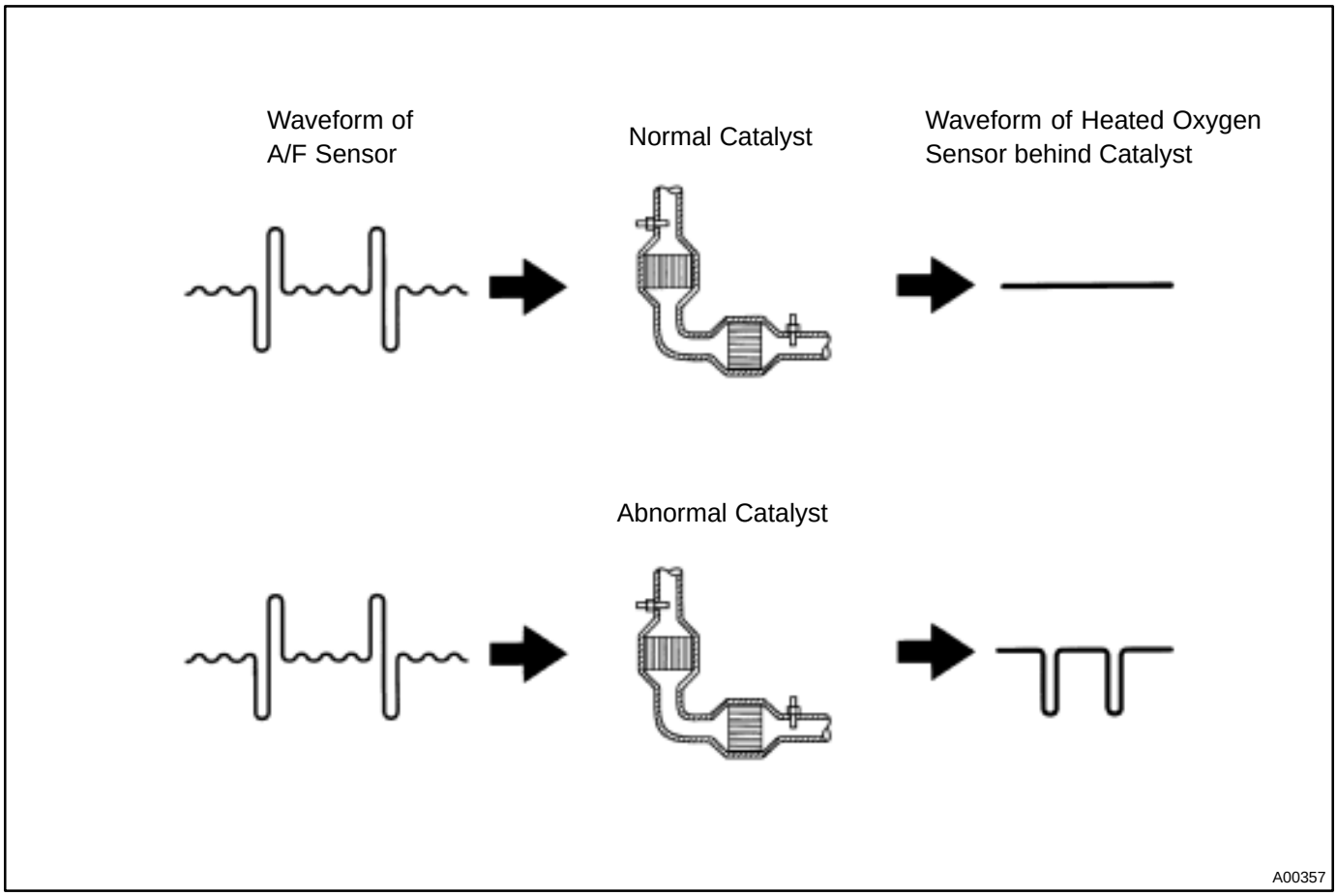

DTC No.	DTC Detecting Condition	Trouble Area
P0420	After engine and catalyst are warmed up, and while vehicle is driven within set vehicle and engine speed range, waveform of heated oxygen sensor (bank 1 sensor 2) alternates flutteringly between rich and lean (2 trip detection logic)	●Three–way catalytic converter ●Open or short in heated oxygen sensor (bank 1 sensor 2) circuit ●Heated oxygen sensor (bank 1 sensor 2) ●Open or short in A/F sensor circuit ●A/F sensor

CONFIRMATION ENGINE RACING PATTERN

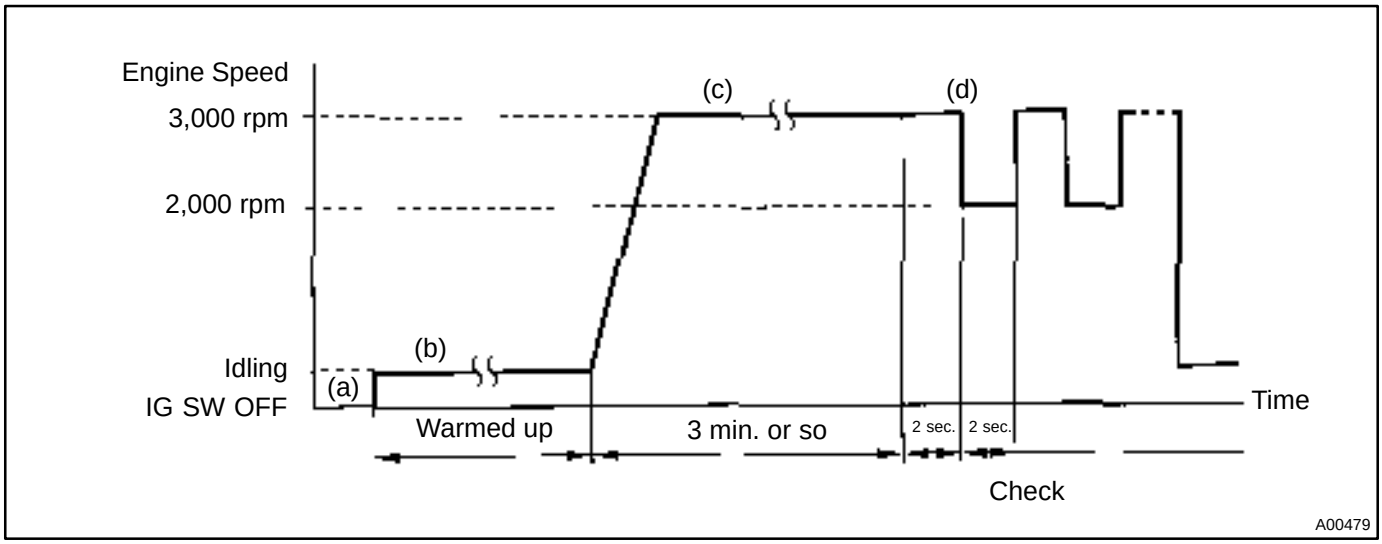

(a) Connect the OBD II scan tool or TOYOTA hand–held tester to the DLC3.
(b) Start the engine and warm it up with all accessories switched OFF until water temp. is stable.
(c) Race the engine at 2,500 ~ 3,000 rpm for about 3 min.
(d) When racing the engine at 3,000 rpm for 2 sec. and 2,000 rpm for 2 sec. alternately, check the waveform of the heated oxygen sensor (bank 1 sensor 2).

INSPECTION PROCEDURE

HINT:
Read freeze frame data using TOYOTA hand–held tester or OBD II scan tool. Because freeze frame records the engine conditions when the malfunction is detected, when troubleshooting it is useful for determining whether the vehicle was running or stopped, the engine warmed up or not, the air–fuel ratio lean or rich, etc. at the time of the malfunction.

1	**Are there any other codes (besides DTC P0420) being output?**

YES → **Go to relevant DTC chart.**

NO

2	**Check gas leakage on exhaust system.**

NG → **Repair or replace.**

OK

3	Check A/F sensor (See page DI–66).

NG → Repair or replace.

OK

4	Check heated oxygen sensor (bank 1 sensor 2) (See page DI–77).

NG → Repair or replace.

OK

Replace three–way catalytic converter.

DI1JZ–04

DTC	P0440	Evaporative Emission Control System Malfunction

CIRCUIT DESCRIPTION

The vapor pressure sensor and VSV for vapor pressure sensor are used to detect abnormalities in the evaporative emission control system.
The ECM decides whether there is an abnormality in the evaporative emission control system based on the vapor pressure sensor signal.
DTC P0440 is recorded by the ECM when evaporative emissions leak from the components within the dotted line in fig. 1 below, or when the vapor pressure sensor malfunctions.

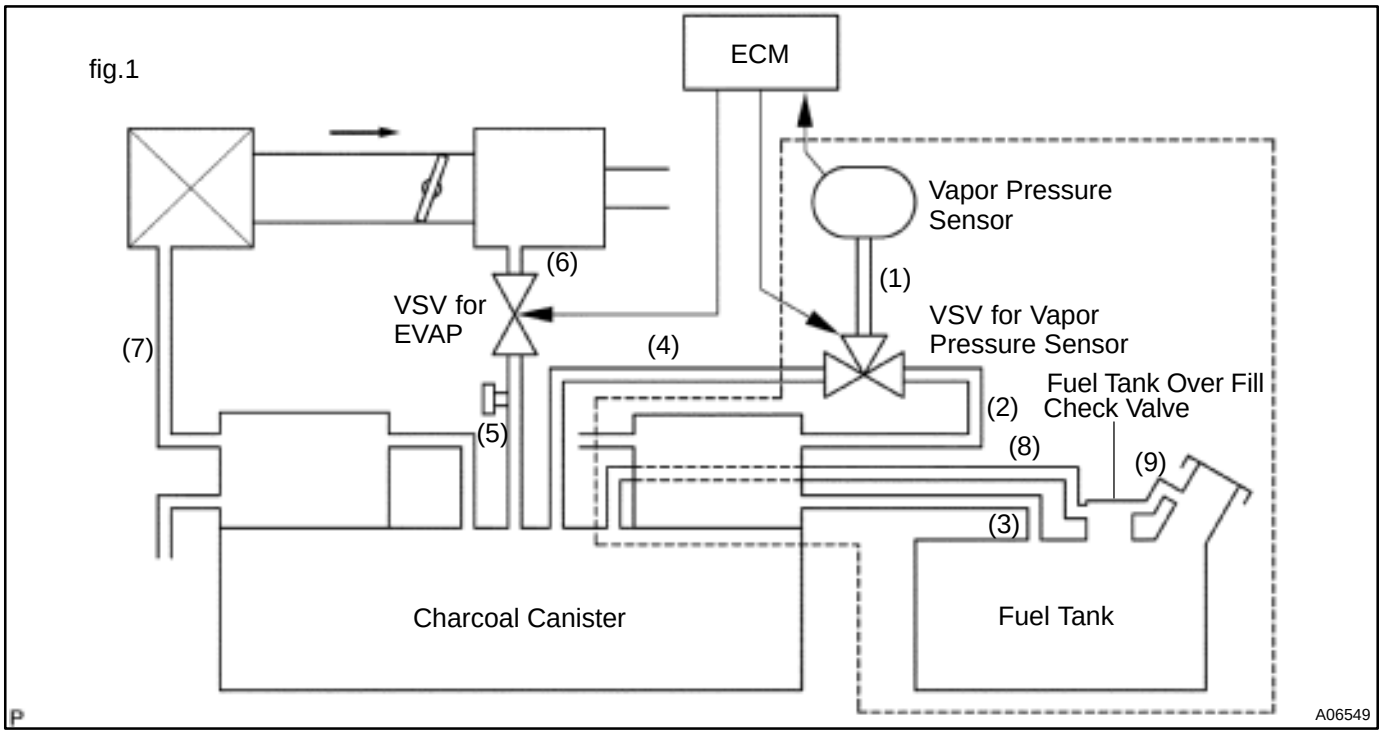

DTC No.	DTC Detecting Condition	Trouble Area
P0440	Fuel tank pressure is atmospheric pressure after vehicle is driven for 20 min. (2 trip detection logic)	●Vapor pressure sensor ●Fuel tank cap incorrectly installed ●Fuel tank cap cracked or damaged ●Vacuum hose cracked, holed, blocked, damaged or disconnected ((1) or (2) in fig. 1) ●Hose or tube cracked, holed, damaged or loose seal ((3) in fig. 1) ●Fuel tank cracked, holed or damaged ●Charcoal canister cracked, holed or damaged ●Fuel tank over fill check valve cracked or damaged

WIRING DIAGRAM

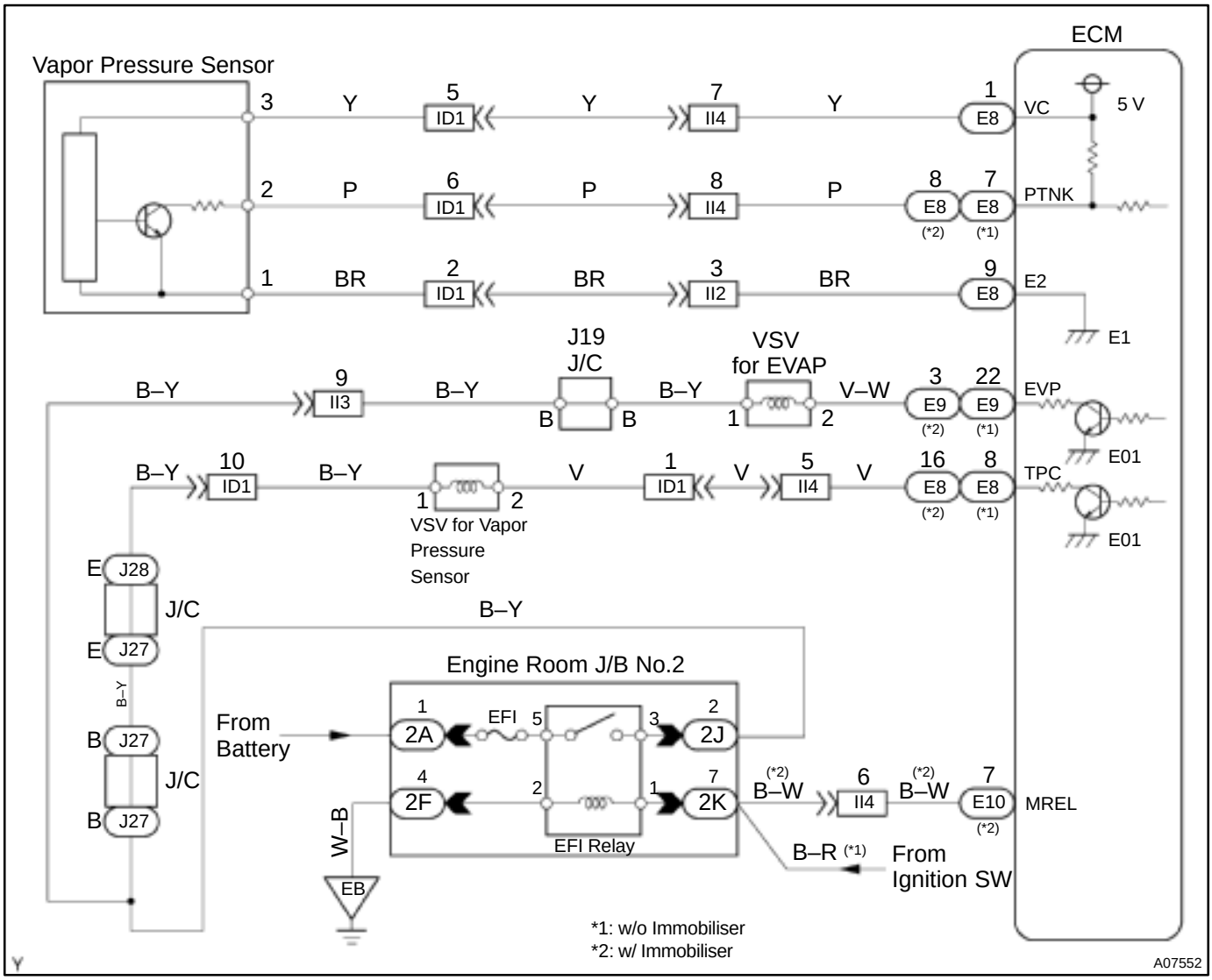

INSPECTION PROCEDURE

HINT:

- If DTC P0441 (Evaporative Emission Control System Incorrect Purge Flow), P0446 (Evaporative Emission Control System Vent Control Malfunction), P0450 (Evaporative Emission Control System Pressure Sensor Malfunction) or P0451 is output after DTC P0440 (Evaporative Emission Control System Malfunction), first troubleshoot DTC P0441, P0446, P0450 or P0451. If no malfunction is detected, troubleshoot DTC P0440 next.
- Ask the customer whether, after the MIL came on, the customer found the fuel tank cap loose and tightened it. Also ask the customer whether the fuel tank cap was loose when refuelling. If the fuel tank cap was not loose, it was the cause of the DTC. If the fuel tank cap was not loose or if the customer was not sure if it was loose, troubleshoot according to the following procedure.
- Read freeze frame data using TOYOTA hand–held tester or OBD II scan tool. Because freeze frame records the engine conditions when the malfunction is detected, when troubleshooting it is useful for determining whether the vehicle was running or stopped, the engine warmed up or not, the air–fuel ratio lean or rich, etc. at the time of the malfunction.
- When the ENGINE RUN TIME in the freeze frame data is less than 200 seconds, carefully check the VSV for EVAP, charcoal canister and vapor pressure sensor.

1	**Check whether hose close to fuel tank have been modified, and check whether there are signs of any accident near the fuel tank or charcoal canister.**

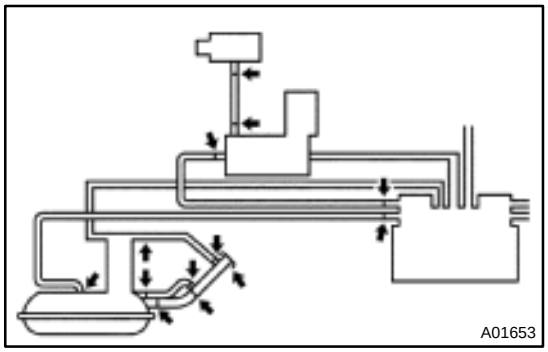

CHECK:

Check for cracks, deformation and loose connection of the following parts.

- Fuel tank
- Charcoal canister
- Fuel tank filler pipe
- Hoses and tubes around fuel tank and charcoal canister

NG → **Repair or replace.**

OK

2	**Check that fuel tank cap is TOYOTA genuine parts.**

NG → **Replace to TOYOTA genuine parts.**

OK

3	**Check that fuel tank cap is correctly installed.**

NG → **Correctly install fuel tank cap.**

OK

4	**Check fuel tank cap (See page EC–6).**

NG → **Replace fuel tank cap.**

OK

5	**Check filler neck for damage.**

PREPARATION:

Remove the fuel tank cap.

CHECK:

Visually check the filler neck for damage.

NG → **Replace filler neck.**

OK

6	**Check vacuum hoses between vapor pressure sensor and VSV for vapor pressure sensor, and VSV for vapor pressure sensor and charcoal canister.**

CHECK:

(a) Check that the vacuum hose is connected correctly.
(b) Check the vacuum hose for looseness and disconnection.
(c) Check the vacuum hose for cracks, hole and damage.

NG → **Repair or replace.**

OK

7	**Check hose and tube between fuel tank and charcoal canister.**

CHECK:

(a) Check for proper connection of the fuel tank and fuel evap pipe, fuel evap pipe and fuel tube under the floor, fuel tube under the floor and charcoal canister.
(b) Check the hose and tube for cracks, hole and damage.

NG → **Repair or replace.**

OK

8	**Check charcoal canister (See page EC–6).**

NG → **Replace charcoal canister.**

OK

9	**Check voltage between terminals VC and E2 of ECM connector.**

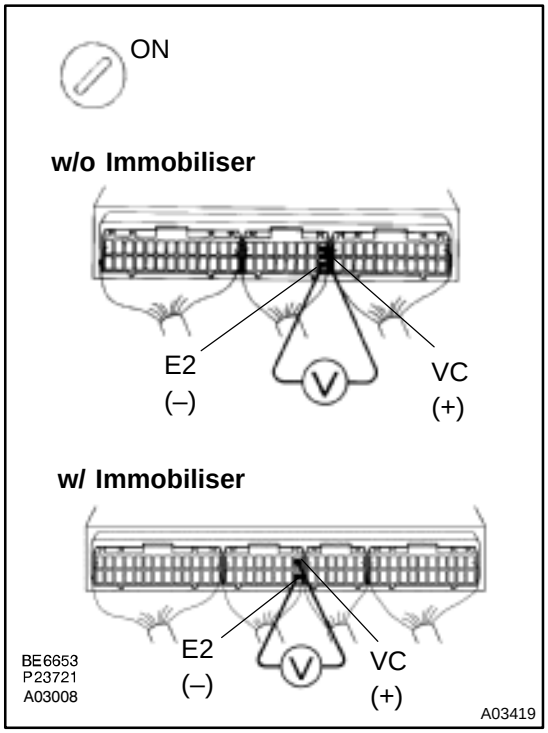

CHECK:

(a) Remove the glove compartment (See page SF–64).

(b) Turn the ignition switch ON.

CHECK:

Measure voltage between terminals VC and E2 of the ECM connector.

OK:

Voltage: 4.5 ~ 5.5 V

NG → **Check and replace ECM (See page IN–31).**

OK

10	Check voltage between terminals PTNK and E2 of ECM connector.

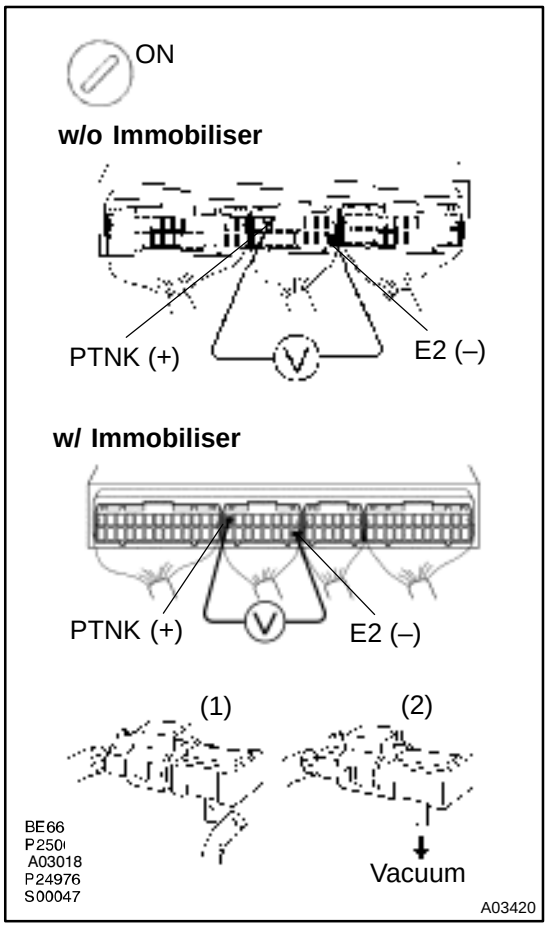

PREPARATION:

(a) Remove the glove compartment (See page SF–64).

(b) Turn the ignition switch ON.

CHECK:

Measure voltage between terminals PTNK and E2 of the ECM connector.

(1) Disconnect the vacuum hose from the vapor pressure sensor.

(2) Using the MITYVAC (Hand–Held Vacuum Pump), apply vacuum 4.0 kPa (30 mmHg, 1.18 in.Hg) to the vapor pressure sensor.

NOTICE:

The vacuum applied to the vapor pressure sensor must be less than 66.7 kPa (500 mmHg, 19.7 in.Hg).

OK:

(1) Voltage: 2.9 ~ 3.7 V

(2) Voltage: 0.5 V or less

OK	Go to step 12.

NG

11	Check for open and short in harness and connector between vapor pressure sensor and ECM (See page IN–31).

NG	Repair or replace harness or connector.

OK

Replace vapor pressure sensor.

12	**Check fuel tank and fuel tank over fill check valve for cracks and damage (See page EC–6).**

NG → **Replace fuel tank or fuel tank over fill check valve.**

OK

It is likely that vehicle user did not properly close fuel tank cap. Please explain to customer how to properly install fuel tank cap.

DTC	P0441	Evaporative Emission Control System Incorrect Purge Flow

DTC	P0446	Evaporative Emission Control System Vent Control Malfunction

CIRCUIT DESCRIPTION

The vapor pressure sensor and VSV for vapor pressure sensor are used to detect abnormalities in the evaporative emission control system.

The ECM decides whether there is an abnormality in the evaporative emission control system based on the vapor pressure sensor signal.

DTCs P0441 and P0446 are recorded by the ECM when evaporative emissions leak from the components within the dotted line in fig. 1 below, or when there is a malfunction in either the VSV for EVAP, the VSV for vapor pressure sensor, or in the vapor pressure sensor itself.

fig.1

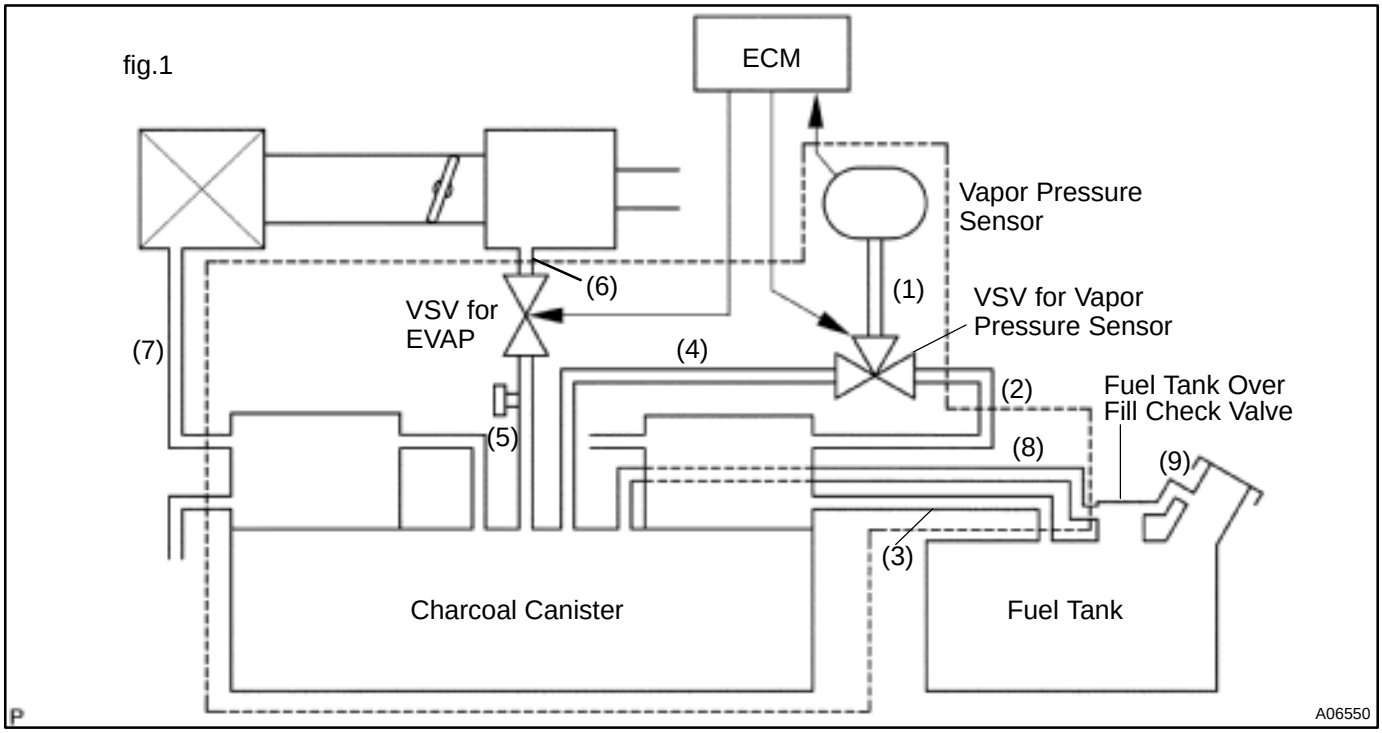

DTC No.	DTC Detecting Condition	Trouble Area
P0441	Pressure in the charcoal canister does not drop during purge control (2 trip detection logic)	●Open or short in VSV circuit for vapor pressure sensor ●VSV for vapor pressure sensor ●Open or short in vapor pressure sensor circuit ●Vapor pressure sensor ●Open or short in VSV circuit for EVAP ●VSV for EVAP ●Vacuum hose cracks, hole, blocked, damaged or disconnected ((1), (4), (5) holed (6) and (7) in fig. 1) ●Charcoal canister cracked, holed or damaged ●Fuel tank over fill check valve cracked or damaged
	During purge cut–off, pressure in charcoal canister is very low compared with atmospheric pressure (2 trip detection logic)	
P0446	When VSV for vapor pressure sensor is OFF, ECM judges that there is no continuity between vapor pressure sensor and charcoal canister (2 trip detection logic)	
	When VSV for vapor pressure sensor is ON, ECM judges that there is no continuity between vapor pressure sensor and fuel tank (2 trip detection logic)	
	After purge cut off operates, pressure in charcoal canister is maintained at atmospheric pressure (2 trip detection logic)	

WIRING DIAGRAM

Refer to DTC P0440 (Evaporative Emission Control System Malfunction) on page DI–122.

INSPECTION PROCEDURE

TOYOTA hand–held tester:

HINT:

- If DTC P0441 (Evaporative Emission Control System Incorrect Purge Flow), P0446 (Evaporative Emission Control System Vent Control Malfunction), P0450 (Evaporative Emission Control System Pressure Sensor Malfunction) or P0451 is output after DTC P0440 (Evaporative Emission Control System Malfunction), first troubleshoot DTC P0441, P0446, P0450 or P0451. If no malfunction is detected, troubleshoot DTC P0440 next.
- Read freeze frame data using TOYOTA hand–held tester or OBD II scan tool. Because freeze frame records the engine conditions when the malfunction is detected, when troubleshooting it is useful for determining whether the vehicle was running or stopped, the engine warmed up or not, the air–fuel ratio lean or rich, etc. at the time of the malfunction.
- When the ENGINE RUN TIME in the freeze frame data is less than 200 seconds, carefully check the VSV for EVAP, charcoal canister and vapor pressure sensor.

1	**Check VSV connector for EVAP, VSV connector for vapor pressure sensor and vapor pressure sensor connector for looseness and disconnection.**

NG → **Repair or connect VSV or sensor connector.**

OK

2	**Check vacuum hoses (1), (4), (5), (6), (7), (8) and (9) on page DI–122).**

CHECK:

(a) Check that the vacuum hose is connected correctly.
(b) Check the vacuum hose for looseness and disconnection.
(c) Check the vacuum hose for cracks, hole, damage and blockage.

NG → **Repair or replace.**

OK

3	**Check voltage between terminals VC and E2 of ECM connector (See page DI–122, step 9).**

NG → **Check and replace ECM (See page IN–31).**

OK

4	**Check voltage between terminals PTNK and E2 of ECM connector (See page DI–122, step 10).**

OK → **Go to step 6.**

NG

5	**Check for open and short in harness and connector between vapor pressure sensor and ECM (See page IN–31).**

NG → **Repair or replace harness or connector.**

OK

Replace vapor pressure sensor.

6	**Check purge flow.**

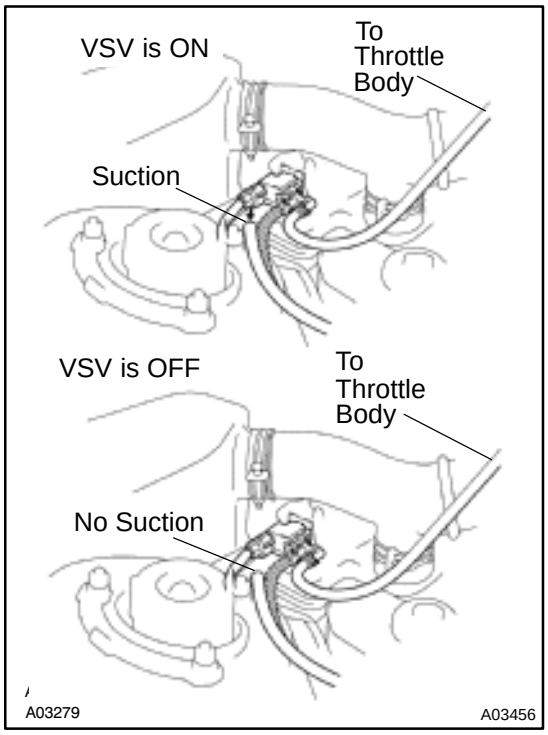

PREPARATION:

(a) Connect the TOYOTA hand–held tester to the DLC3.
(b) Select the ACTIVE TEST mode on the TOYOTA hand–held tester.
(c) Disconnect the vacuum hose for the VSV for EVAP from the charcoal canister.
(d) Start the engine.

CHECK:

When the VSV for EVAP is operated by the TOYOTA hand–held tester, check whether the disconnected hose applies suction to your finger.

OK:

VSV is ON:
Disconnected hose applies suction to your finger.
VSV is OFF:
Disconnected hose applies no suction to your finger.

OK → **Go to step 10.**

NG

7	**Check vacuum hose between intake manifold and VSV for EVAP, and VSV for EVAP and charcoal canister.**

CHECK:

(a) Check that the vacuum hose is connected correctly.
(b) Check the vacuum hose for looseness and disconnection.
(c) Check the vacuum hose for cracks, hole, damage and blockage.

NG → **Repair or replace.**

OK

8	**Check operation of VSV for EVAP (See page SF–45).**

OK → **Go to step 9.**

NG

Replace VSV, charcoal canister and then clean the vacuum hose between throttle body and VSV for EVAP, and VSV for EVAP and charcoal canister.

9	**Check for open and short in harness and connector between EFI main relay (Marking: EFI) and VSV for EVAP, and VSV for EVAP and ECM (See page IN–31).**

NG → **Repair or replace harness or connector.**

OK

Check and replace ECM (See page IN–31).

10	Check the VSV for vapor pressure sensor.

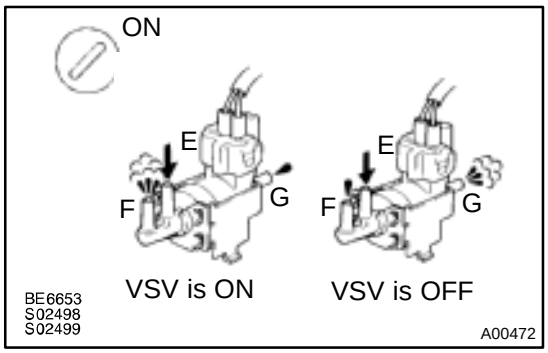

PREPARATION:

(a) Connect the TOYOTA hand–held tester to the DLC3.
(b) Turn the ignition switch ON and push the OBD II scan tool or TOYOTA hand–held tester main switch ON.
(c) Select the ACTIVE TEST mode on the TOYOTA hand–held tester.

CHECK:

Check the VSV operation when it is operated by TOYOTA hand–held tester.

OK:

(1) VSV is ON:
Air from port E is flowing out through port F.
(2) VSV is OFF:
Air from port E is flowing out through port G.

OK	Go to step 13.

NG

11	Check operation of VSV for vapor pressure sensor (See page SF–47).

OK	Gp to step 12.

NG

Replace VSV charcoal canister, and then clean the vacuum hoses between charcoal canister and VSV for vapor pressure sensor, and VSV for vapor pressure sensor and vapor pressure sensor.

12	**Check for open and short in harness and connector between EFI main relay (Marking: EFI) and VSV for vapor pressure sensor, and VSV for vapor pressure sensor and ECM (See page IN–31).**

NG → **Repair or replace harness or connector.**

OK

Check and replace ECM (See page IN–31).

13	**When VSV connector for vapor pressure sensor is disconnected and VSV for EVAP is ON, measure voltage between terminals PTNK and E2 of ECM connector.**

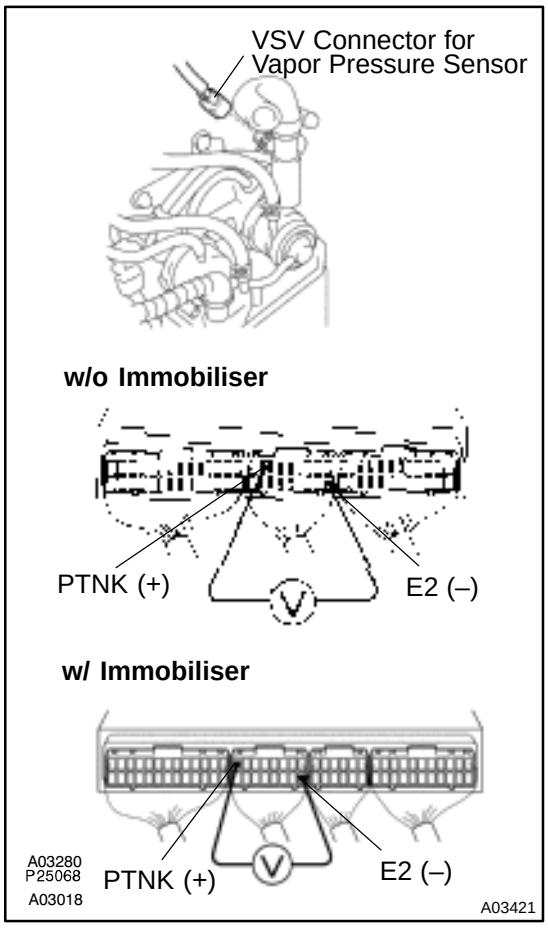

PREPARATION:

(a) Remove the glove compartment (See page SF–64).
(b) Connect the TOYOTA hand–held tester to the DLC3.
(c) Disconnect the VSV connector for the vapor pressure sensor.
(d) Select the ACTIVE TEST mode on the TOYOTA hand–held tester.
(e) Start the engine.

CHECK:

Measure voltage between terminals PTNK and E2 of the ECM connector using the TOYOTA hand–held tester when the VSV for the EVAP is ON.

OK:

Voltage: 2.0 V or less

OK → **Go to step 15.**

NG

14	**Check vacuum hoses between charcoal canister and VSV for vapor pressure sensor, and vapor pressure sensor and VSV for vapor pressure sensor.**

CHECK:

(a) Check that the vacuum hose is connected correctly.
(b) Check the vacuum hose for looseness and disconnection.
(c) Check the vacuum hose for cracks, hole, damage and blockage.

NG → **Repair or replace.**

OK

15	**Check the charcoal canister.**

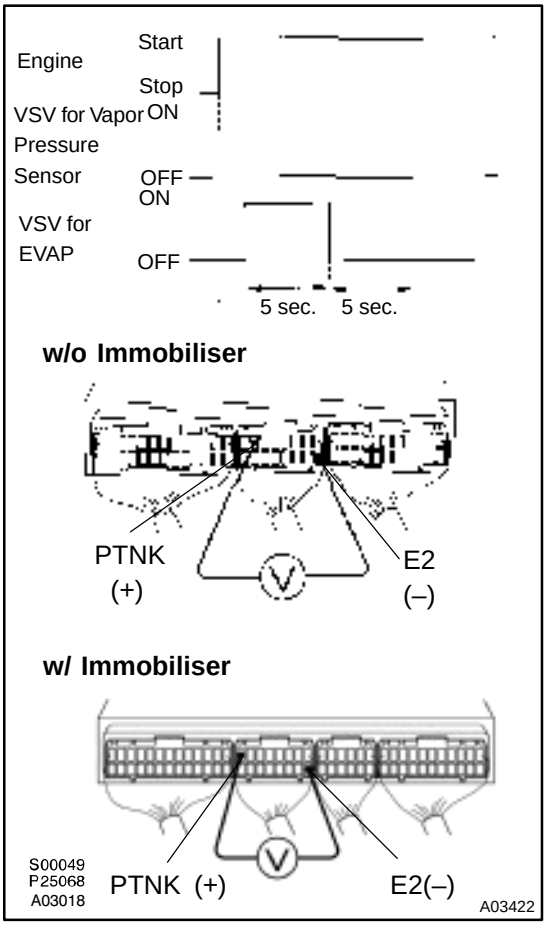

PREPARATION:

(a) Remove the glove compartment (See page SF–64).
(b) Connect the TOYOTA hand–held tester to the DLC3.
(c) Remove the fuel tank cap.
(d) Disconnect the VSV connector for the vapor pressure sensor.
(e) Select the ACTIVE TEST mode on the TOYOTA hand–held tester.
(f) Start the engine.
(g) The VSV for the EVAP is ON by the TOYOTA hand–held tester and remains on for 5 sec.

CHECK:

Measure voltage between terminals PTNK and E2 of the ECM connector 5 sec. after switching the VSV for the EVAP from ON to OFF.

OK:

Voltage: 2.5 V or less

NG → **Replace charcoal canister.**

OK

16	**Remove charcoal canister and check it (See page EC–5)**

NG → **Replace charcoal canister.**

OK

17	**Check fuel tank over fill check valve (See page EC–6).**

NG → **Replace fuel tank over fill check valve or fuel tank.**

OK

Check and replace ECM (See page IN–31).

OBD II scan tool (excluding TOYOTA hand–held tester):

HINT:
If DTC P0441 (Evaporative Emission Control System Incorrect Purge Flow), P0446 (Evaporative Emission Control System Vent Control Malfunction) or P0450 (Evaporative Emission Control System Pressure Sensor Malfunction) is output after DTC P0440 (Evaporative Emission Control System Malfunction), first troubleshoot DTC P0441, P0446 or P0450. If no malfunction is detected, troubleshoot DTC P0440 next.

1	**Check VSV connector for EVAP, VSV connector for vapor pressure sensor and vapor pressure sensor connector for looseness and disconnection.**

NG → **Repair or connect VSV or sensor connector.**

OK

2	**Check vacuum hoses ((1), (4), (5), (6), (7), (8) and (9) on page DI–122).**

CHECK:

(a) Check that the vacuum hose is connected correctly.
(b) Check the vacuum hose for looseness and disconnection.
(c) Check the vacuum hose for cracks, hole, damage and blockage.

NG → **Repair or replace.**

OK

3	**Check voltage between terminals VC and E2 of ECM connector (See page DI–122, step 9).**

NG → **Check and replace ECM (See page IN–31).**

OK

4	**Check voltage between terminals PTNK and E2 of ECM connector (See page DI–122, step 10).**

OK → **Go to step 6.**

NG

5	**Check for open and short in harness and connector between vapor pressure sensor and ECM (See page IN–31).**

NG → **Repair or replace harness or connector.**

OK

Replace vapor pressure sensor.

6	Check VSV for EVAP.

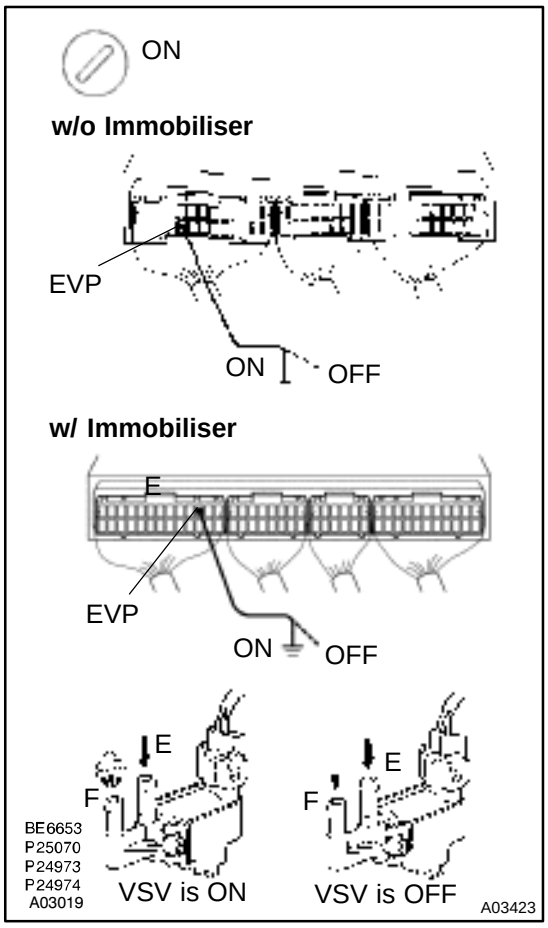

PREPARATION:

(a) Remove the glove compartment (See page SF–64).

(b) Turn the ignition switch ON.

CHECK:

Check VSV function.

(1) Connect between terminal EVP of the ECM connector and body ground (ON).

(2) Disconnect between terminal EVP of the ECM connector and body ground (OFF).

OK:

(1) VSV is ON:
Air from port E is flowing out through port F.
(2) VSV is OFF:
Air does not flow from port E to port F.

OK	Go to step 8.

NG

7	Check operator of VSV for EVAP (See page SF–45).

NG	Go to step 9.

OK

Replace VSV and clean vacuum hoses between throttle body and VSV for EVAP, and VSV for EVAP and charcoal canister, and then check charcoal canister.

8	Check for open and short in harness and connector between EFI main relay (Marking: EFI) and VSV for EVAP, and VSV for EVAP and ECM (See page IN–31)

NG → Repair or replace harness or connector.

OK

Check and replace ECM (See page IN–31).

9	Check VSV for vapor pressure sensor.

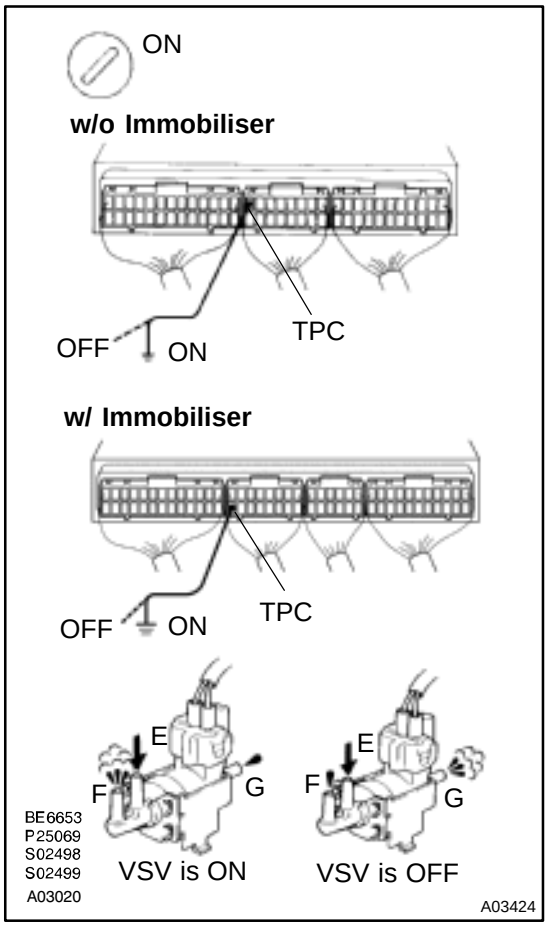

PREPARATION:

(a) Remove the glove compartment (See page SF–64).

(b) Turn the ignition switch ON.

CHECK:

(a) Connect between terminal TPC of the ECM connector and body ground (ON).

(b) Disconnect between terminal TPC of the ECM connector and body ground (OFF).

OK:

(1) VSV is ON:
Air from port E is flowing out through port F.
(2) VSV is OFF:
Air from port E is flowing out through port G.

OK → Check and replace charcoal canister (See page EC–6).

NG

10	Check operation of VSV for vapor pressure sensor (See page SF–47).

NG → Go to step 11.

OK →

Replace VSV and clean vacuum hoses between charcoal canister and VSV for vapor pressure sensor, and VSV for vapor pressure sensor and vapor pressure sensor, and then check the charcoal canister.

11	Check for open and short in harness and connector between EFI main relay (Marking: EFI) and VSV for vapor pressure sensor, and VSV for vapor pressure sensor and ECM (See page IN–31).

NG → Repair or replace harness or connector.

OK →

Check and replace ECM (See page IN–31).

12	Check fuel tank over fill check valve (See page EC–6).

NG → Replace fuel tank over fill check valve or fuel tank.

OK →

Check and replace charcoal canister (See page EC–6).

DI1K0–04

DTC	P0450	Evaporative Emission Control System Pressure Sensor Malfunction

DTC	P0451	Evaporative Emission Control System Pressure Sensor Range/Performance

CIRCUIT DESCRIPTION

The vapor pressure sensor and VSV for vapor pressure sensor are used to detect abnormalities in the evaporative emission control system.

The ECM decides whether there is an abnormality in the evaporative emission control system based on the vapor pressure sensor signal.

DTC P0450 is recorded by the ECM when the vapor pressure sensor malfunction.

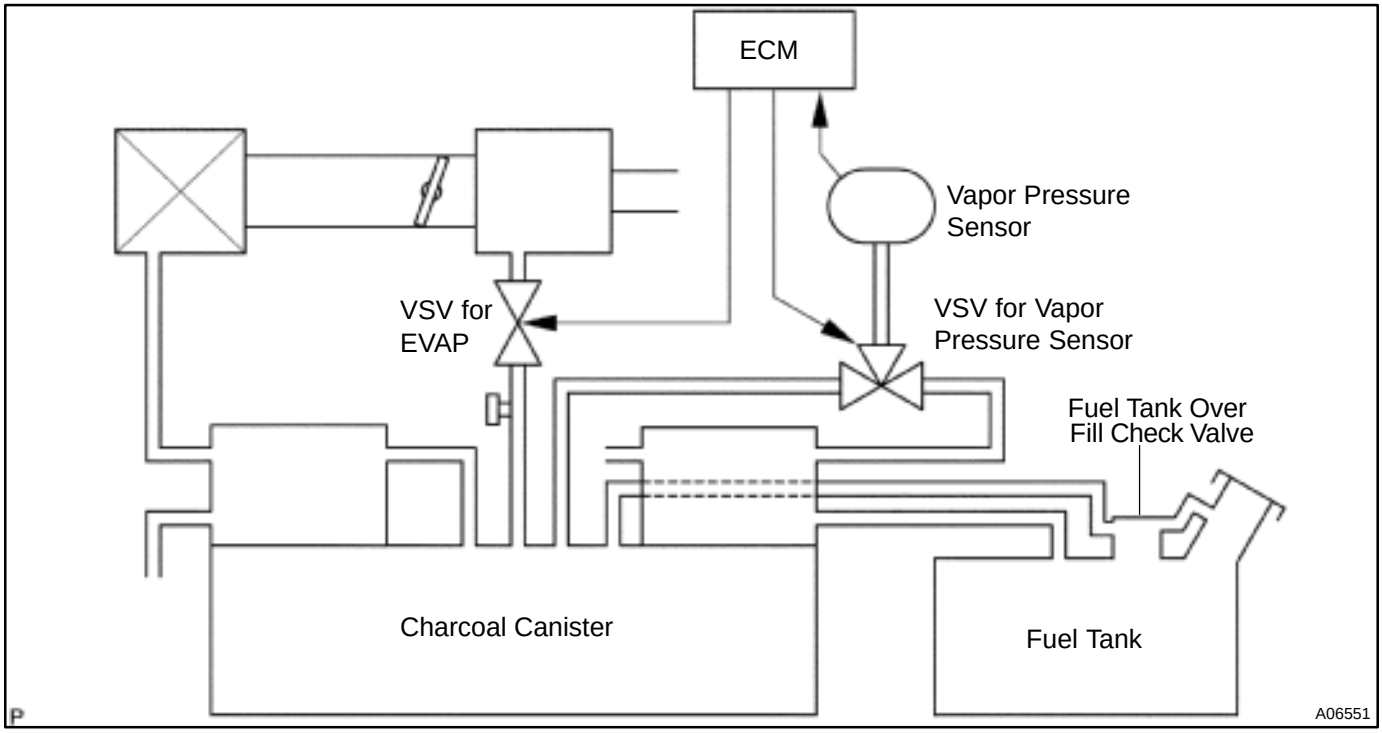

DTC No.	DTC Detecting Condition	Trouble Area
P0450	10 seconds or more after engine starting codition (a) or (b) continues for 7 seconds or more: (2 trip detection logic) (a) vapor pressure sensor value < –4 kpa (–30 mmHg, –1.0 in.Hg) (b) Vapor pressure sensor value ~ 2.1 kpa (–15 mmHg, 0.4 in.Hg)	●Open or short in vapor pressure sensor circuit ●Vapor pressure sensor ●ECM ●Fuel tank over fill check valve cracked or damaged.
P0451	Vapor pressure sensor output extremely changes under conditions of (a), (b) and (c): (2 trip detection logic) (a) Vehicle speed: 0 km/h (0 mph) (b) Engine speed: idling (c) VSV for vapor pressure sensor is ON	

WIRING DIAGRAM

Refer to DTC P0440 (Evaporative Emission Control System Malfunction) on page DI–122.

INSPECTION PROCEDURE

HINT:

- If DTC P0441 (Evaporative Emission Control System Incorrect Purge Flow), P0446 (Evaporative Emission Control System Vent Control Malfunction), P0450 (Evaporative Emission Control System Pressure Sensor Malfunction) or P0451 is output after DTC P0440 (Evaporative Emission Control System Malfunction), first troubleshoot DTC P0441, P0446, P0450 or P0451. If no malfunction is detected, troubleshoot DTC P0440 next.
- Read freeze frame data using TOYOTA hand–held tester or OBD II scan tool. Because freeze frame records the engine conditions when the malfunction is detected, when troubleshooting it is useful for determining whether the vehicle was running or stopped, the engine warmed up or not, the air–fuel ratio lean or rich, etc. at the time of the malfunction.
- When the ENGINE RUN TIME in the freeze frame data is less than 200 seconds, carefully check the VSV for EVAP, charcoal canister and vapor pressure sensor.

1	**Check voltage between terminals VC and E2 of ECM connector (See page DI–122, step 9).**

NG → **Check and replace ECM (See page IN–31).**

OK

2	Check voltage between terminals PTNK and E2 of ECM connector (See page DI–122, step 10).

OK → Check and replace ECM (See page IN–31).

NG

3	Check for open and short in harness and connector between the vapor pressure sensor and ECM (See page IN–31).

NG → Repair or replace harness or connector.

OK

Replace vapor pressure sensor.

DI01B–10

DTC	P0500	Vehicle Speed Sensor Malfunction

CIRCUIT DESCRIPTION

The No.1 vehicle speed sensor outputs a 4–pulse signal for every revolution of the rotor shaft, which is rotated by the transmission output shaft via the driven gear. After this signal is converted into a more precise rectangular waveform by the waveform shaping circuit inside the combination meter, it is then transmitted to the ECM. The ECM determines the vehicle speed based on the frequency of these pluse signals.

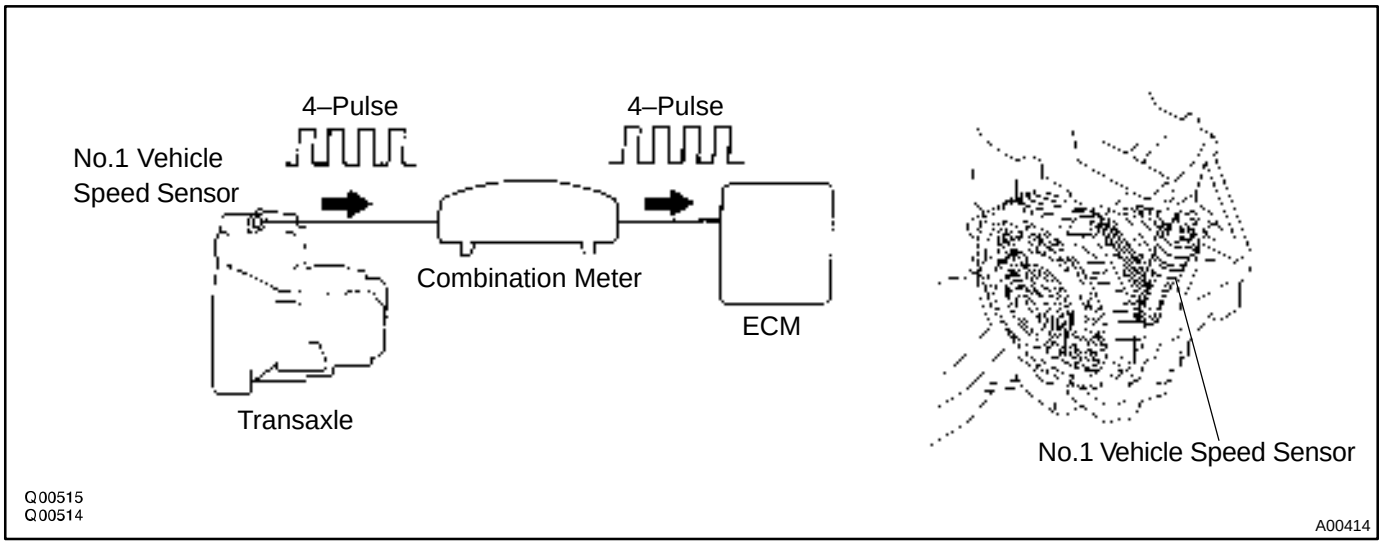

DTC No.	DTC Detecting Condition	Trouble Area
P0500	During vehicle is being driven, no vehicle speed sensor signal to ECM (2 trip detection logic)	●Combination meter ●Open or short in No.1 vehicle speed sensor circuit ●No.1 vehicle speed sensor ●ECM

WIRING DIAGRAM

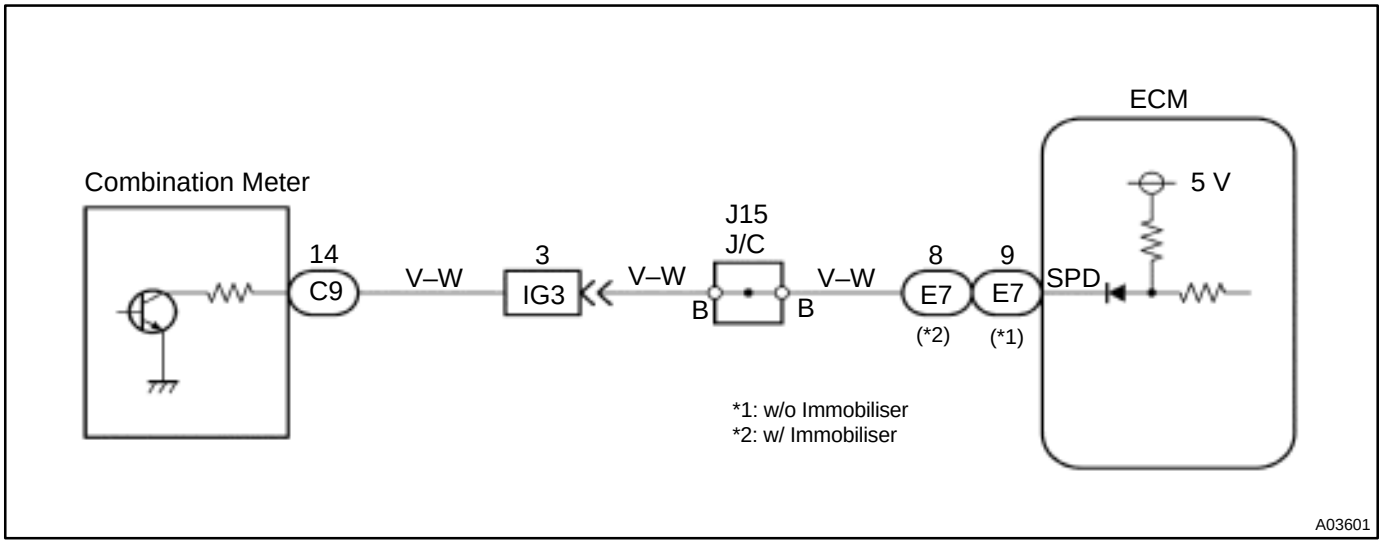

INSPECTION PROCEDURE

HINT:

Read freeze frame data using TOYOTA hand–held tester or OBD II scan tool. Because freeze frame records the engine conditions when the malfunction is detected, when troubleshooting it is useful for determining whether the vehicle was running or stopped, the engine warmed up or not, the air–fuel ratio lean or rich, etc. at the time of the malfunction.

1	**Check operation of speedometer.**

CHECK:

Drive the vehicle and check if the operation of the speedmeter in the combination meter is normal.

HINT:

The vehicle speed sensor is operating normally if the speedometer display is normal.

NG → **Check speedometer circuit. See combination meter troubleshooting (See page BE–2).**

OK

2	Check voltage between terminal SPD of ECM connector and body ground.

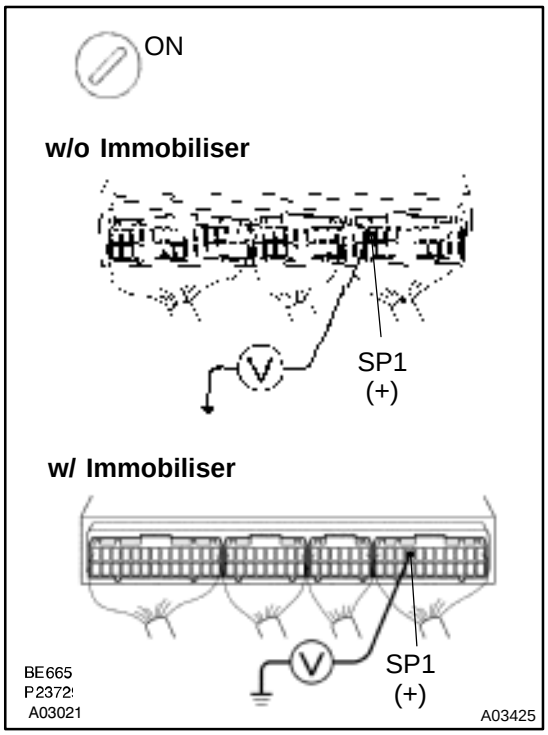

PREPARATION:

(a) Remove the glove compartment (See page SF–64).
(b) Shift the shift lever to neutral.
(c) Jack up one of the front wheels.
(d) Turn the ignition switch ON.

CHECK:

Measure voltage between terminal SPD of ECM connector and body ground when the wheel is turned slowly.

OK:

Voltage is generated intermittently.

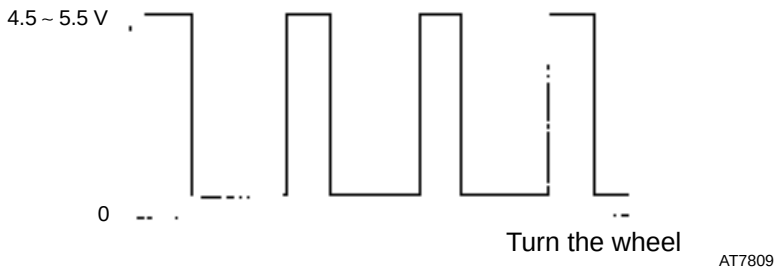

NG → **Check and repair harness and connector between combination meter and ECM.**

OK

Check and replace ECM (See page IN–31).

DI01C–05

DTC	P0505	Idle Control System Malfunction

CIRCUIT DESCRIPTION

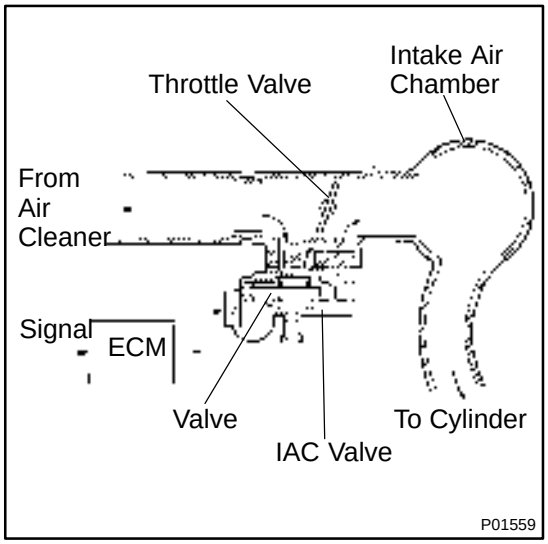

The rotary solenoid type IAC valve is located on the throttle body and intake air bypassing the throttle valve is directed to the IAC valve through a passage.
In this way the intake air volume bypassing the throttle valve is regulated, controlling the engine speed.
The ECM operates only the IAC valve to perform idle–up and provide feedback for the target idling speed.

DTC No.	DTC Detecting Condition	Trouble AreaTrouble Area
P0505	Idle speed continues to vary greatly from the target speed (2 trip detection logic)	●IAC valve is stuck or closed ●Open or short in IAC valve circuit ●Open or short in A/C switch circuit ●Air intake (hose loose) ●ECM

WIRING DIAGRAM

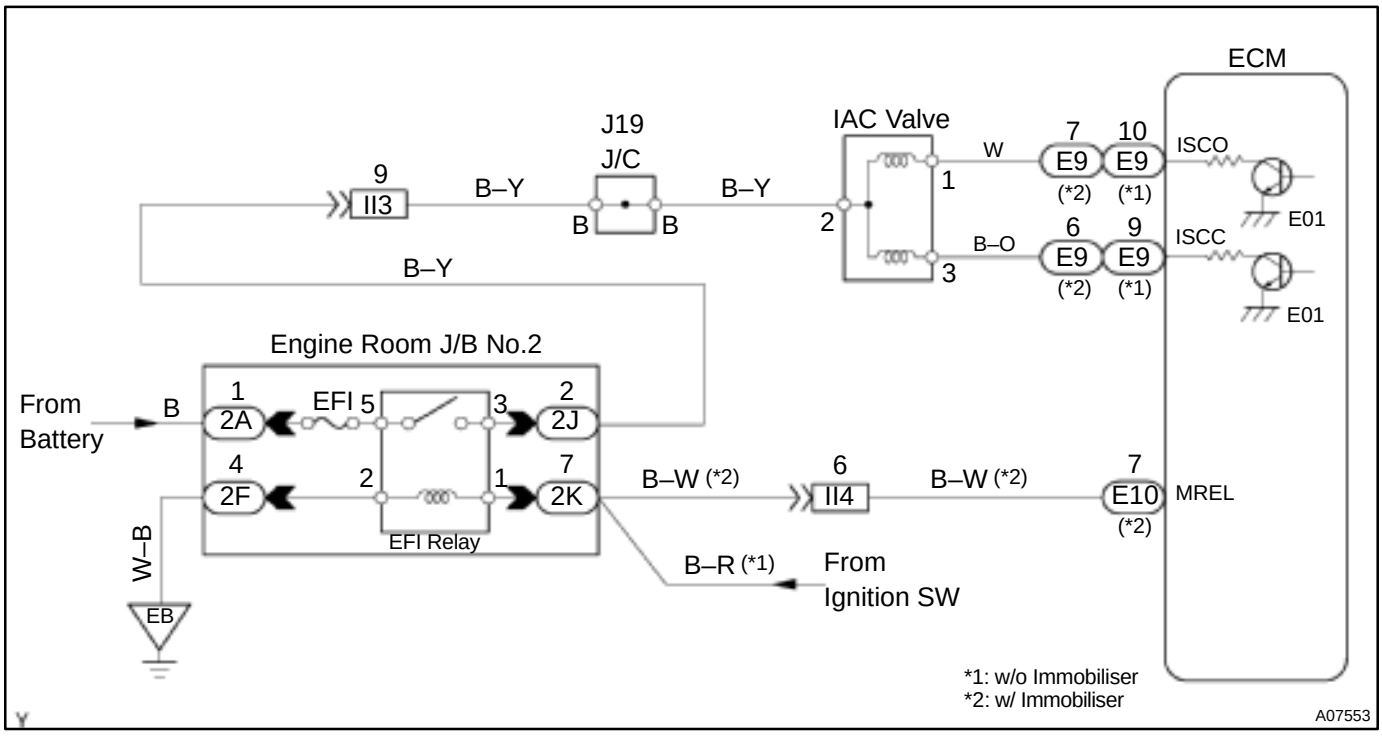

INSPECTION PROCEDURE

HINT:

Read freeze frame data using TOYOTA hand–held tester or OBD II scan tool. Because freeze frame records the engine conditions when the malfunction is detected, when troubleshooting it is useful for determining whether the vehicle was running or stopped, the engine warmed up or not, the air–fuel ratio lean or rich, etc. at the time of the malfunction.

1	**Check idle speed.**

PREPARATION:

(a) Warm up the engine to normal operating temperature.
(b) Switch off all the accessories.
(c) Switch off the air conditioning.
(d) Shift the transmission into N or neutral position.
(e) Connect the OBD II scan tool or TOYOTA hand–held tester to the DLC3 on the vehicle.
(f) Using SST, connect terminals TE1 and E1 of the DLC1.

CHECK:

Check the difference of engine speed between the ones less than 5 sec. and more than 5 sec. after connecting terminals TE1 and E1 of the DLC1.

OK:

Difference of engine speed: More than 100 rpm

OK → **Go to step 6.**

NG

2	Check voltage between terminals RSO, RSC of ECM connector and body ground.

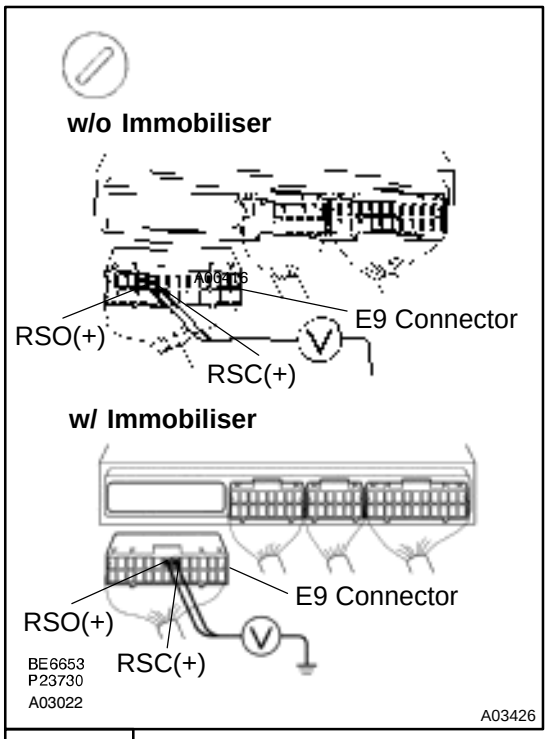

PREPARATION:

(a) Remove the glove compartment (See page SF–64).
(b) Disconnect the E9 connector of the ECM.
(c) Turn the ignition switch ON.

CHECK:

Measure voltage between terminals RSO, RSC of the ECM connector and body ground,

OK:

Voltage: 9 ~ 14 V

OK	Go to step 4.

NG

3	Check IAC valve (See page SF–35).

NG	Replace IAC valve.

OK

Check for open and short in harness and connector between engine room J/B No.2 and IAC valve, and IAC valve and ECM (See page IN–31).

4	Check operation of IAC valve (See page SF–35).

NG → Repair or replace IAC valve.

OK

5	Check blockage of IAC valve and passage to bypass throttle valve.

NG → Repair or replace IAC valve.

OK

Check and replace ECM (See page IN–31).

6	Check for A/C signal circuit (See page AC–84).

NG → Repair or replace.

OK

Check air induction system
(See page SF–1).

DTC	P1130	A/F Sensor Circuit Range/Performance Malfunction (Only for California Spec.)

CIRCUIT DESCRIPTION

Refer to DTC P0125 (Insufficient Coolant Temp. for Closed Loop Fuel Control (Only for California Spec.)) on page DI–61.

DTC No.	DTC Detecting Condition	Trouble Area
P1130	Voltage output* of A/F sensor remains at 3.8 V or more, or 2.8 V or less, during engine running after engine is warmed up (2 trip detection logic) *: Output value changes at the inside of ECM only	●Open or short in A/F sensor circuit ●A/F sensor ●ECM
	Voltage output* of A/F sensor does not change from 3.30 V, during engine running after engine is warmed up (2 trip detection logic) *: Output value changes at inside of ECM only	
	Open or short in A/F sensor circuit (2 trip detection logic)	

HINT:

- After confirming DTC P1130, use the OBD II scan tool or TOYOTA hand−held tester to confirm voltage output of A/F sensor (AFS B1 S1 / O2S B1 S1) from the CURRENT DATA.
- The A/F sensor's output voltage and the short−term fuel trim value can be read using the OBD II scan tool or TOYOTA hand−held tester.
- The ECM controls the voltage of AF− and AF+ terminals of ECM to the fixed voltage. Therefore, it is impossible to confirm the A/F sensor output voltage without OBD II scan tool or TOYOTA hand–held tester.
- OBD II scan tool (excluding TOYOTA hand−held tester) displays the one fifth of the A/F sensor output voltage which is displayed on the TOYOTA hand−held tester.

WIRING DIAGRAM

Refer to DTC P0125 (Insufficient Coolant Temp. for Closed Loop Fuel Control (Only for California Spec.)) on page DI–61.

CONFIRMATION DRIVING PATTERN

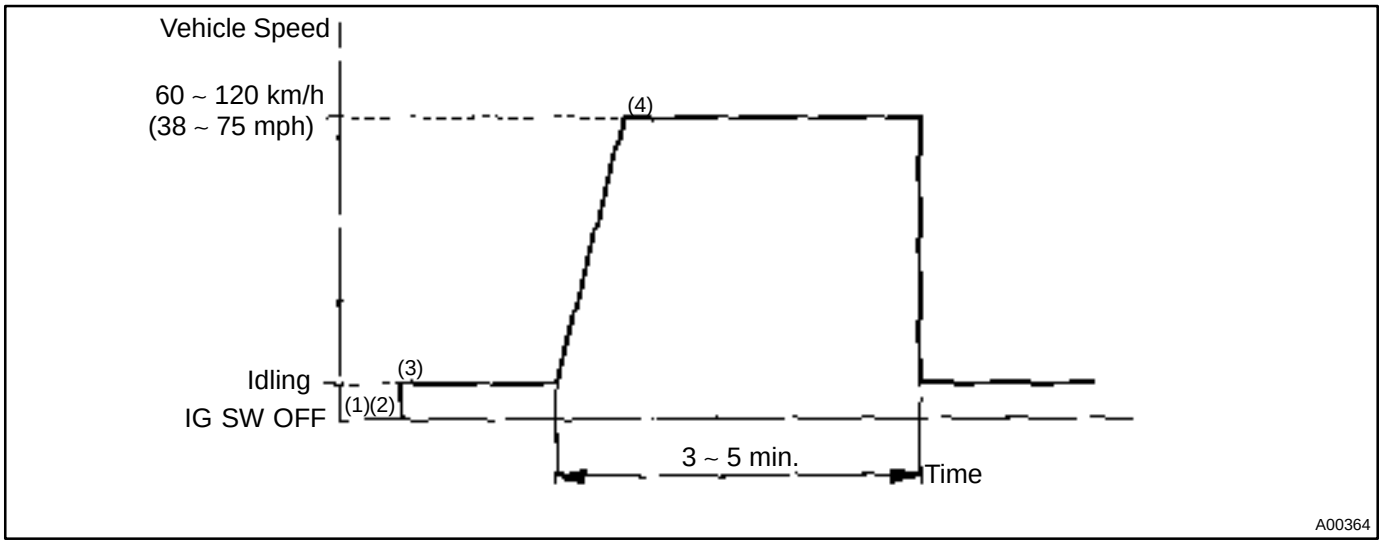

(1) Connect the TOYOTA hand–held tester to the DLC3.
(2) Switch the TOYOTA hand–held tester from normal mode to check mode (See page DI–3).
(3) Start the engine and warm it up with all accessory switches OFF.
(4) Drive the vehicle at 60 ~ 120 km/h (38 ~ 75 mph) and engine speed at 1,600 ~ 3,200 rpm for 3 ~ 5 min.

HINT:
If a malfunction exists, the MIL will light up during step (4).

NOTICE:
If the conditions in this test are not strictly followed, detection of the malfunction will not be possible.
If you do not have a TOYOTA hand–held tester, turn the ignition switch OFF after performing steps (3) and (4), then perform steps (3) and (4) again.

INSPECTION PROCEDURE

HINT:
Read freeze frame data using TOYOTA hand–held tester or OBD II scan tool. Because freeze frame records the engine conditions when the malfunction is detected, when troubleshooting it is useful for determining whether the vehicle was running or stopped, the engine warmed up or not, the air–fuel ratio lean or rich, etc. at the time of the malfunction.

1	**Are there any other codes (besides DTC P1130) being output?**

YES → **Go to relevant DTC chart.**

NO

2	**Connect OBD II scan tool or TOYOTA hand–held tester, and read value for voltage output of A/F sensor.**

PREPARATION:

(a) Connect the OBD II scan tool or TOYOTA hand–held tester to the DLC3.

(b) Warm up the A/F sensor with the engine at 2,500 rpm for approx. 90 sec.

CHECK:

Read voltage value of the A/F sensor on the screen of OBD II scan tool or TOYOTA hand–held tester when you perform all the following conditions.

HINT:

The voltage of AF～ terminal of ECM is 3.3 V fixed and AF＞ terminal is 3.0 V fixed. Therefore, it is impossible to check the A/F sensor output voltage at the terminals (AF～/AF＞) of ECM.

OK:

Condition	A/F Sensor Voltage Value
Engine idling	●Not remains at 3.30 V (* 0.660 V) ●Not remains at 3.8 V (* 0.76 V) or more ●Not remains at 2.8 V (* 0.56 V) or less *: When you use the OBD II scan tool (excluding TOYOTA hand–held tester)
Engine racing	
Driving at engine speed 1,500 rpm or more and vehicle speed 40 km/h (25 mph) or more, and operate throttle valve open and close	

HINT:

- During fuel enrichment, there is a case that the output voltage of the A/F sensor is below 2.8 V (* 0.56 V), it is normal.
- During fuel cut, there is a case that the output voltage of the A/F sensor is above 3.8 V (* 0.76 V), it is normally.
- If output voltage of the A/F sensor remains at 3.30 V (* 0.660 V) even after performing all the above conditions, A/F sensor circuit may be open.
- If output voltage of the A/F sensor remains at 3.8 V (* 0.76 V) or more, or 2.8 V (* 0.56 V) or less even after performing all the above conditions, A/F sensor circuit may be short.

*: When you use the OBD II scan tool (excluding TOYOTA hand–held tester).

OK → **Go to step 9.**

NG

3	**Check for open and short in harness and connector between ECM and A/F sensor (See page IN–31).**

NG → **Repair or replace harness or connector.**

OK

4	Check resistance of A/F sensor heater (See page SF–59).

NG → Replace A/F sensor.

OK

5	Check air induction system (See page SF–1).

NG → Repair or replace.

OK

6	Check EGR system (See page EC–12).

NG → Repair EGR system.

OK

7	Check fuel pressure (See page SF–6).

NG → Check and repair fuel pump, fuel pipe line and filter (See page SF–1).

OK

8	Check injector injection (See page SF–23).

NG → Replace injector.

OK →

Replace A/F sensor.

9	Perform confirmation driving pattern (See page DI–152).

Go →

10	Is there DTC P1130 being output again?

YES → Check and replace ECM.

NO →

11	Did vehicle runs out of fuel in the past?

NO → Check for intermittent problems.

YES →

DTC P0125 is caused by running out of fuel.

DTC	P1133	A/F Sensor Circuit Response Malfunction (Only for California Spec.)

CIRCUIT DESCRIPTION

Refer to DTC P0125 (Insufficient Coolant Temp. for Closed Loop Fuel Control (Only for California Spec.)) on page DI–61.

DTC No.	DTC Detecting Condition	Trouble Area
P1133	After engine is warmed up, and during vehicle driving at engine speed 1,600 rpm or more and vehicle speed 60 km/h (38 mph) or more, if response characteristic of A/F sensor becomes deteriorated (2 trip detection logic)	●A/F sensor

INSPECTION PROCEDURE

HINT:

Read freeze frame data using TOYOTA hand–held tester or OBD II scan tool. Because freeze frame records the engine conditions when the malfunction is detected, when troubleshooting it is useful for determining whether the vehicle was running or stopped, the engine warmed up or not, the air–fuel ratio lean or rich, etc. at the time of the, malfunction.

1	**Are there any other codes (besides DTC P1133) being output?**

YES → **Go to relevant DTC chart.**

NO

2	**Connect OBD II scan tool or TOYOTA nand–held teter, and read value for voltage output of A/F sensor.**

PREPARATION:

(a) Connect the OBD II scan tool or TOYOTA hand–held tester to the DLC3.

(b) Warm up the A/F sensor with the engine at 2,500 rpm for approx. 90 sec.

CHECK:

Read voltage value of the A/F sensor on the screen of OBD II scan tool or TOYOTA hand–held tester when you perform all the following conditions.

HINT:

The voltage of AF～ terminal of ECM is 3.3 V fixed and AF＞ terminal is 3.0 V fixed. Therefore, it is impossible to check the A/F sensor output voltage at the terminals (AF～/AF＞) of ECM.

OK:

Condition	A/F Sensor Voltage Value
Engine idling	●Not remains at 3.30 V (* 0.660 V) ●Not remains at 3.8 V (* 0.76 V) or more ●Not remains at 2.8 V (* 0.56 V) or less *: When you use the OBD II scan tool (excluding TOYOTA hand–held tester)
Engine racing	
Driving at engine speed 1,500 rpm or more and vehicle speed 40 km/h (25 mph) or more, and operate throttle valve open and close	

HINT:

- During fuel enrichment, there is a case that the output voltage of the A/F sensor is below 2.8 V (* 0.56 V), it is normal.
- During fuel cut, there is a case that the output voltage of the A/F sensor is above 3.8 V (* 0.76 V), it is normally.
- If output voltage of the A/F sensor remains at 3.30 V (* 0.660 V) even after performing all the above conditions, A/F sensor circuit may be open.
- If output voltage of the A/F sensor remains at 3.8 V (* 0.76 V) or more, or 2.8 V (* 0.56 V) or less even after performing all the above conditions, A/F sensor circuit may be short.

*: When you use the OBD II scan tool (excluding TOYOTA hand–held tester).

OK → **Go to step 9.**

NG

3	**Check for open and short in harness and connector between ECM and A/F sensor (See page IN–31).**

NG → **Repair or replace harness or connector.**

OK

4	Check resistance of A/F sensor heater (See page SF–59).

NG → Replace A/F sensor.

OK

5	Check air induction system (See page SF–1).

NG → Repair or replace.

OK

6	Check EGR system (See page EC–12).

NG → Repair EGR system.

OK

7	Check fuel pressure (See page SF–6).

NG → Check and repair fuel pump, fuel pipe line and filter (See page SF–1).

OK

8	Check injector injection (See page SF–23).

NG → Replace injector.

OK →

Replace A/F sensor.

9	Perform confirmation driving pattern (See page DI–152).

Go →

10	Is there DTC P1133 being output again?

YES → Check and replace ECM.

NO →

11	Did vehicle runs out of fuel in the past?

NO → Check for intermittent problems.

YES →

DTC P1133 is caused by running out of fuel.

DTC	P1135	A/F Sensor Heater Circuit Malfunction (Only for California Spec.)

CIRCUIT DESCRIPTION

Refer to DTC P0125 (Insufficient Coolant Temp. for Closed Loop Fuel Control (Only for California Spec.)) on page DI–61.

DTC No.	DTC Detecting Condition	Trouble Area
P1135	When heater operates, heater current exceeds 8 A (2 trip detection logic)	●Open or short in heater circuit of A/F sensor ●A/F sensor heater ●ECM
	Heater current of 0.25 A or less when heater operates (2 trip detection logic)	

WIRING DIAGRAM

Refer to DTC P0125 (Insufficient Coolant Temp. for Closed Loop Fuel Control (Only for California Spec.)) on page DI–61.

INSPECTION PROCEDURE

HINT:

Read freeze frame data using TOYOTA hand–held tester or OBD II scan tool. Because freeze frame records the engine conditions when the malfunction is detected, when troubleshooting it is useful for determining whether the vehicle was running or stopped, the engine warmed up or not, the air–fuel ratio lean or rich, etc. at the time of the malfunction.

1	**Check voltage between terminal HTAF of ECM connector and body ground.**

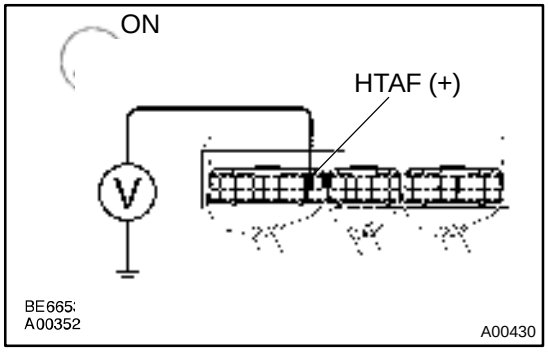

PREPARATION:

(a) Remove the glove compartment (See page SF–64).

(b) Turn the ignition switch ON.

CHECK:

Measure voltage between terminals HTAF of the ECM connector and body ground.

OK:

Voltage: 9 ~ 14 V

OK → **Check and replace ECM (See page IN–31).**

NG

2	Check resistance of A/F sensor heater (See page SF–59).

NG → Replace A/F sensor.

OK

Check and repair harness or connector between EFI main relay (Marking: EFI) and A/F sensor, and A/F sensor and ECM (See page IN–31).

DI01G–06

DTC	P1300	Igniter Circuit Malfunction No.1

DTC	P1310	Igniter Circuit Malfunction No.2

CIRCUIT DESCRIPTION

The ECM determines the ignition timing, turns on Tr1 at a predetermined angle (˚CA) before the desired ignition timing and outputs and ignition signal (IGT) 1 to the igniter.
Since the width of the IGT signal is constant, the dwell angle control circuit in the igniter determines the time the control circuit starts primary current flow to the ignition coil based on the engine rpm and ignition timing one revolution ago, that is, the time the Tr2 turns on.
When it reaches the ignition timing, the ECM turns Tr1 off and outputs the IGT signal O.
This turns Tr2 off, interrupting the primary current flow and generating a high voltage in the secondary coil which causes the spark plug to spark. Also, by the counter electromotive force generated when the primary current is interrupted, the igniter sends an ignition confirmation signal (IGF) to the ECM. The ECM stops fuel injection as a fail safe function when the IGF signal is not input to the ECM.

DTC No.	DTC Detecting Condition	Trouble Area
P1300	No IGF signal to ECM for 4 consecutive IGT1 signals during engine running	●Open or short in IGF or IGT circuit from igniter to ECM ●Ignition coil No.1 (Igniter No.1) ●ECM
P1310	No IGF signal to ECM for 4 consecutive IGT2 signals during engine running	●Open or short in IGF or IGT circuit from igniter to ECM ●Ignition coil No.2 (Igniter No.2) ●ECM

HINT:
Ignition coil No.1 is for cylinder No.1 and No.4, and ignition coil No.2 is for cylinder No.2 and No.3.

WIRING DIAGRAM

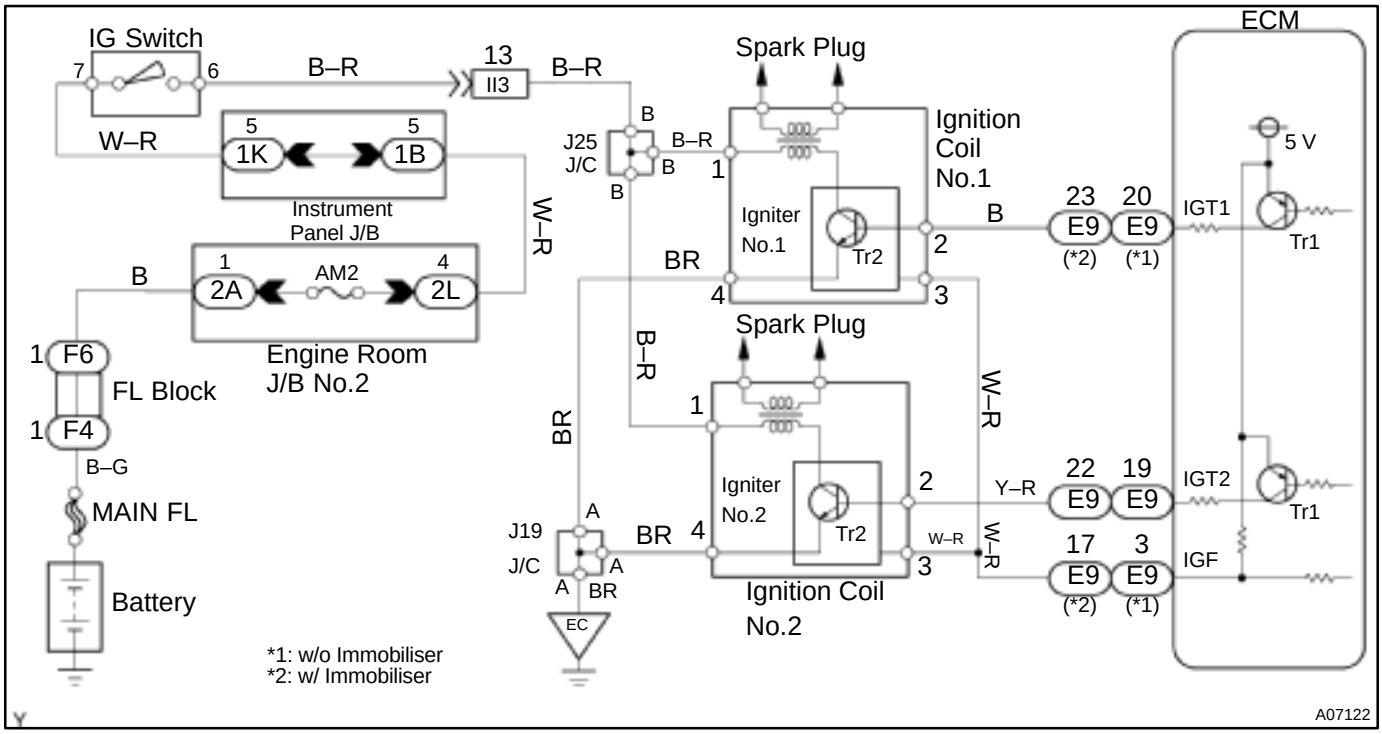

INSPECTION PROCEDURE

HINT:

- If DTC P1300 is displayed, check ignition coil No.1 circuit.
- If DTC P1300 is displayed, check ignition coil No.2 circuit.
- Read freeze frame data using TOYOTA hand–held tester or OBD II scan tool. Because freeze frame records the engine conditions when the malfunction is detected, when troubleshooting it is useful for determining whether the vehicle was running or stopped, the engine warmed up or not, the air–fuel ratio lean or rich, etc. at the time of the malfunction.

1	**Check for spark plug and spark of misifining cylinder (See page DI–89).**

NG → **Go to step 4.**

OK

2	**Check for open and short in harness and connector in IGF signal circuit between ECM and ignition coils (See page IN–31).**

NG → **Repair or replace harness or connector.**

OK

3	**Disconnect ignition coil connectors, and check voltage between terminal IGF of ECM connector and body ground.**

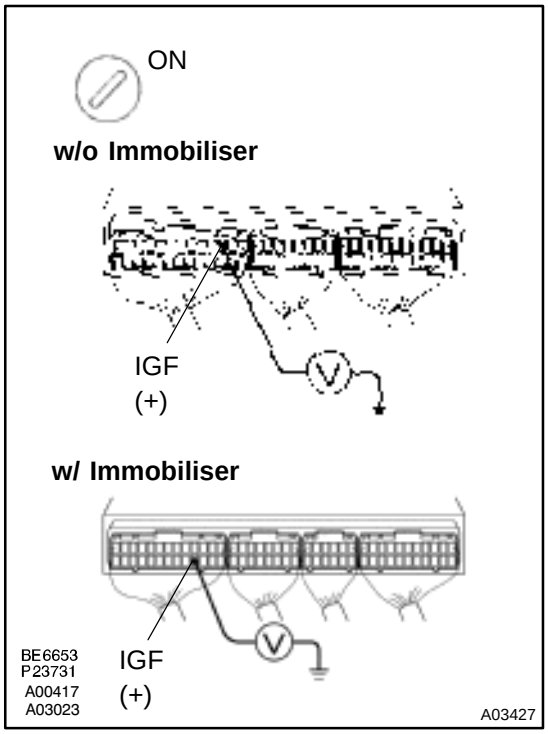

PREPARATION:

(a) Disconnect the ignition coil connector.
(b) Remove the glove compartment (See page SF–64).
(c) Turn the ignition switch ON.

CHECK:

Measure voltage between terminal IGF of the ECM connector and body ground.

OK:

Voltage: 4.5 ~ 5.5 V

OK	**Replace ignition coil.**

NG

Check and replace ECM (See page IN–31).

4	**Check for open and short in harness and connector in IGT1, 2 signal circuit between ECM and ignition coils (See page IN–31).**

NG	**Repair or replace harness or connector.**

OK

5	Check voltage between terminals IGT1, 2 of ECM connector and body ground.

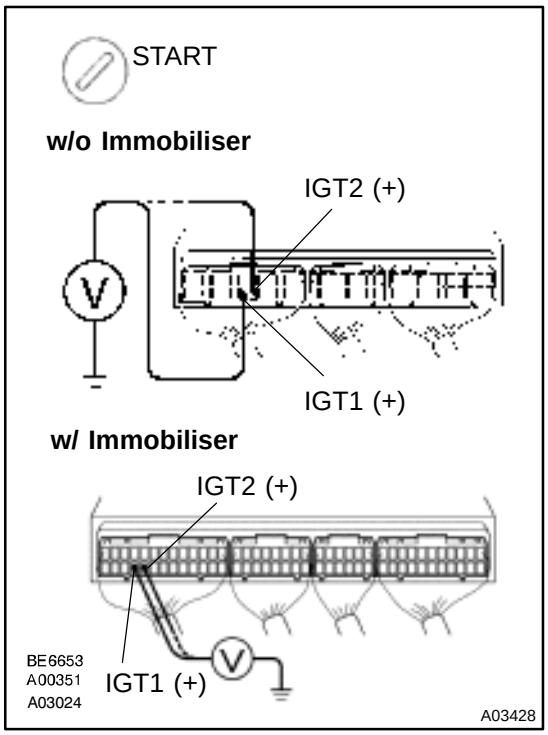

PREPARATION:
Remove the glove compartment (See page SF–64).
CHECK:
Measure voltage between terminal IGT1, 2 of the ECM connector and body ground when the engine is cranked.
OK:
Voltage: More than 0.1 V and less than 4.5 V

Reference: INSPECTION USING OSCILLOSCOPE

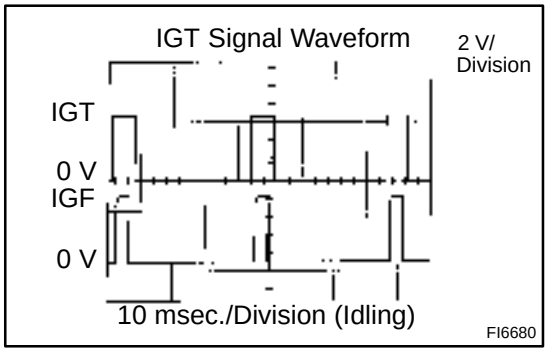

During idling, check waveform between terminals IGT1, 2 and E1 of the ECM.
HINT:
The correct waveforms are as shown.

NG	Check and replace ECM (See page IN–31).

NG

6	Disconnect ignition coil connectors, and check voltage between terminals IGT1, 2 of ECM connector and body ground.

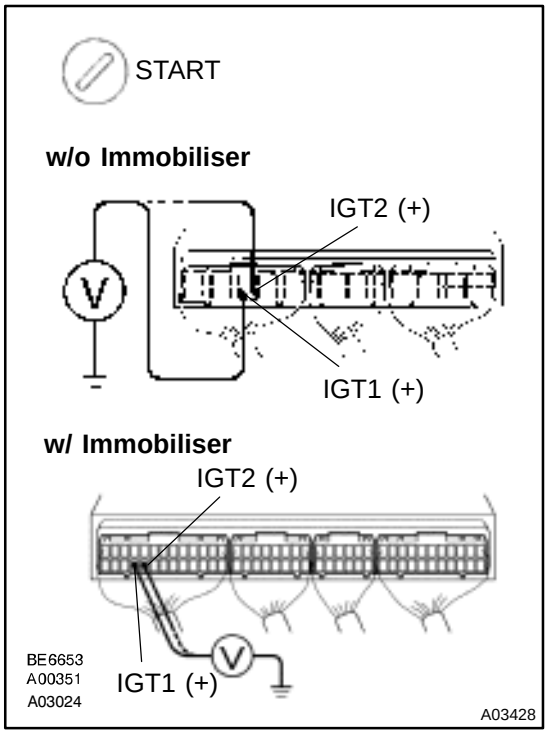

PREPARATION:

(a) Disconnect the ignition coil connectors.

(b) Remove the glove compartment (See page SF–64).

CHECK:

Measure voltage between terminals IGT1, 2 of the ECM connector and body ground when the engine is cranked.

OK:

Voltage: More than 0.1 V and less than 5 V

OK	Replace ignition coil.

NG

7	Check ignition coil with igniter power source circuit.

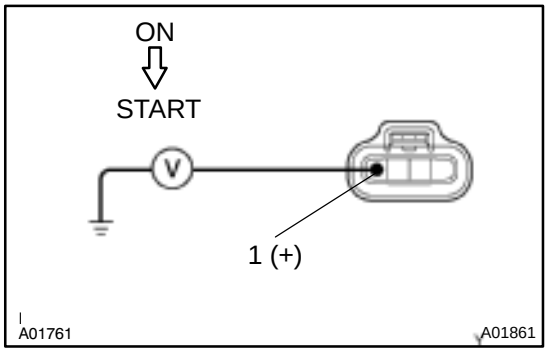

PREPARATION:

Disconnect the ignition coil connector.

CHECK:

Measure voltage between terminal 1 of the ignition coil with the igniter connector and body ground when the ignition switch is turned to ON and STA position.

OK:

Voltage: 9 ~ 14 V

NG	Repair ignition coil with igniter power source circuit.

OK

8	Check for open and short in harness and connector between ignition switch and ignition coils (See page IN–31).

NG → Repair or replace harness or connector.

OK

9	Check ignition coil (See page IG–5).

NG → Replace ignition coil.

OK

10	Check EFI main relay (Marking: EFI) (See page SF–40).

NG → Replace EFI main relay.

OK

Replace igniter.

DI1K1–02

DTC	P1335	Crankshaft Position Sensor Circuit Malfunction (During engine running)

CIRCUIT DESCRIPTION

Refer to DTC P0335 (Crankshaft Position ”A” Circuit Malfunction) on page DI–100.

DTC No.	DTC Detecting Condition	Trouble Area
P1335	If conditions (a) through (c) are met: (a) NE ～ 1,000 rpm (b) NE signal is not detected for over 50 m sec. (c) Not during cranking	●Open or short in crankshaft position sensor circuit ●Crankshaft position sensor ●ECM

WIRING DIAGRAM

Refer to DTC P0335 (Crankshaft Position ”A” Circuit Malfunction) on page DI–100.

INSPECTION PROCEDURE

Refer to DTC P0335 (Crankshaft Position ”A” Circuit Malfunction) on page DI–100.

DTC	P1520	Stop Light Switch Signal Malfunction (Only for A/T)

CIRCUIT DESCRIPTION

This signal is used to detect when the brakes have been applied. The STP signal voltage is the same as the voltage supplied to the stop lights.
The STP signal is used mainly to control the fuel cut–off engine speed. (The fuel cut–off engine speed is reduced slightly when the vehicle is braking.)

DTC No.	DTC Detecting Condition	Trouble Area
P1520	Stop light switch does not turn off even once vehicle is driven (2 trip detection logic)	●Short in stop light switch signal circuit ●Stop light switch ●ECM

WIRING DIAGRAM

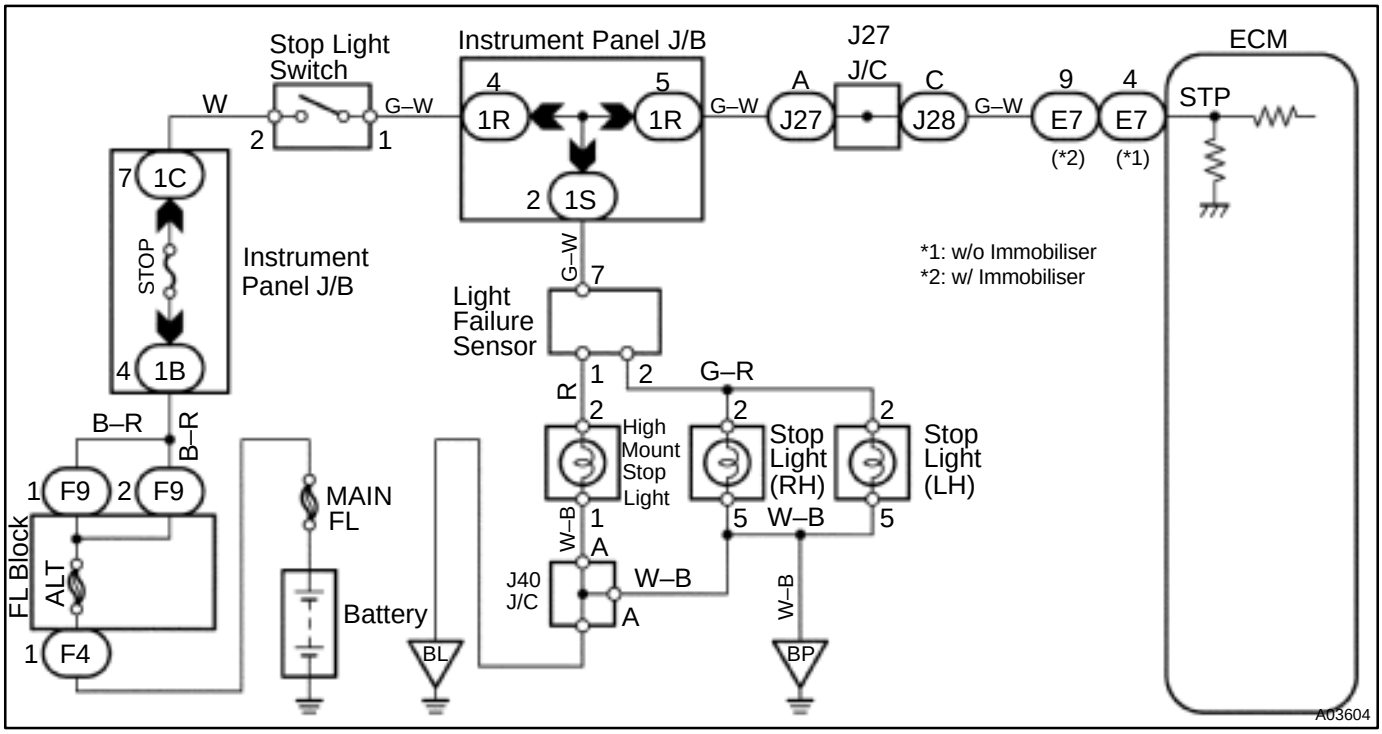

INSPECTION PROCEDURE

HINT:

Read freeze frame data using TOYOTA hand–held tester or OBD II scan tool. Because freeze frame records the engine conditions when the malfunction is detected, when troubleshooting it is useful for determining whether the vehicle was running or stopped, the engine warmed up or not, the air–fuel ratio lean or rich, etc. at the time of the malfunction.

1	**Check operation of stop light.**

PREPARATION:

Check if the stop lights go on and off normally when the brake pedal is operated and released.

NG → **Check and repair stop light circuit (See page BE–37).**

OK

2	Check STP signal.

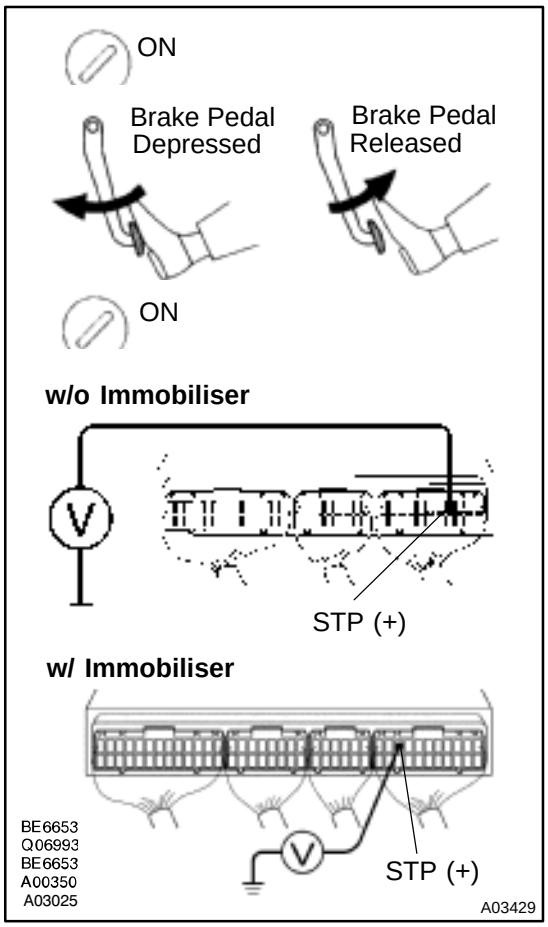

When using TOYOTA hand–held tester:

PREPARATION:

(a) Connect the TOYOTA hand–held tester to the DLC3.

(b) Turn the ignition switch ON and push the TOYOTA hand–held tester main switch ON.

CHECK:

Read the STP signal on the TOYOTA hand–held tester.

OK:

Brake pedal is depressed: STP ... ON

Brake pedal is released: STP ... OFF

When not using TOYOTA hand–held tester:

PREPARATION:

Turn the ignition switch ON.

CHECK:

Check voltage between terminal STP of the ECM connector and body ground.

OK:

Brake pedal	Voltage
Depressed	7.5 ~ 14 V
Released	Below 1.5 V

OK → **Check for intermittent problems (See page DI–3).**

NG

3	Check harness and connector between ECM and stop light switch (See page IN–31).

NG → **Repair or replace harness or connector.**

OK

Check and replace ECM (See page IN–31).

DTC	P1600	ECM BATT Malfunction

CIRCUIT DESCRIPTION

Battery positive voltage is supplied to terminal BATT of the ECM even when the ignition switch is OFF for use by the DTC memory and air–fuel ratio adaptive control value memory, etc.

DTC No.	DTC Detecting Condition	Trouble Area
P1600	Open in back up power source circuit	●Open in back up power source circuit ●ECM

HINT:
If DTC P1600 appear, the ECM does not store another DTC.

WIRING DIAGRAM

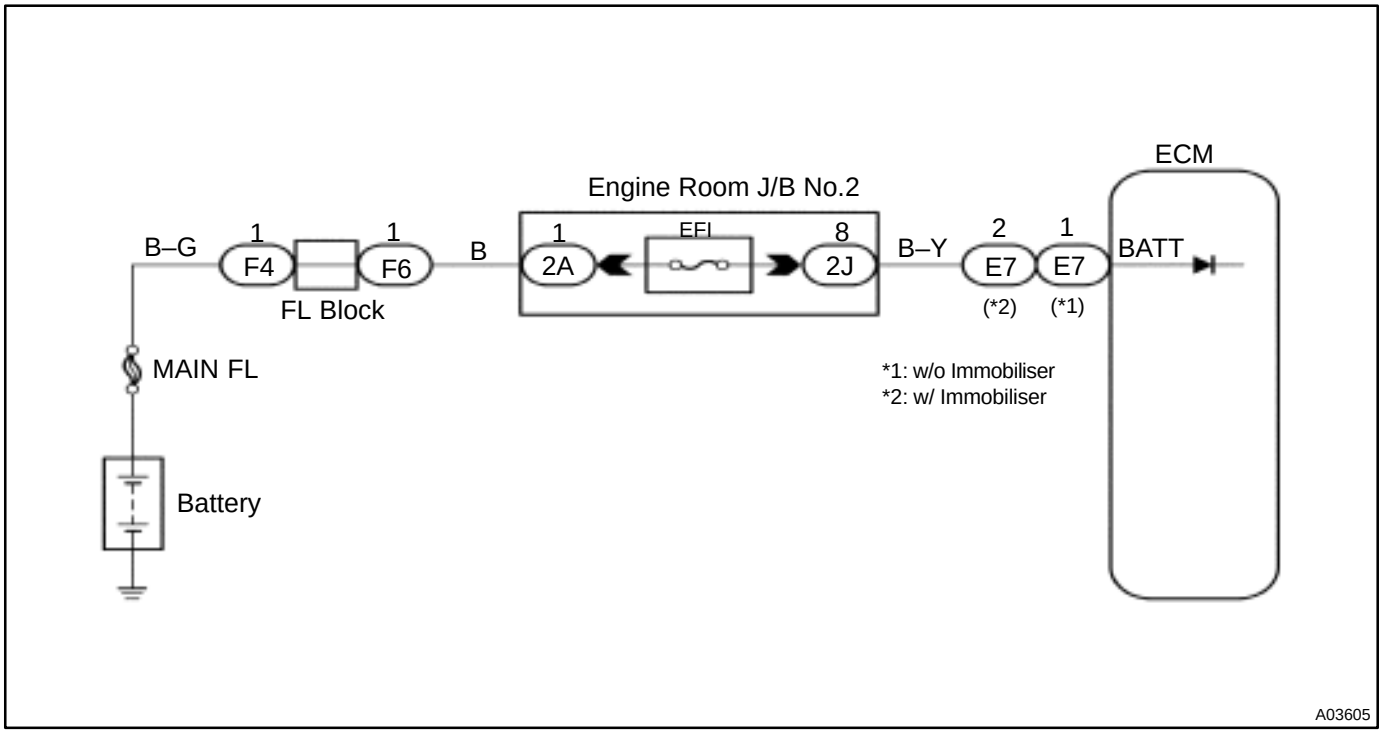

INSPECTION PROCEDURE

HINT:
Read freeze frame data using TOYOTA hand–held tester or OBD II scan tool. Because freeze frame records the engine conditions when the malfunction is detected, when troubleshooting it is useful for determining whether the vehicle was running or stopped, the engine warmed up or not, the air–fuel ratio lean or rich, etc. at the time of the malfunction.

1	Check voltage between terminal BATT of ECM connector and body ground.

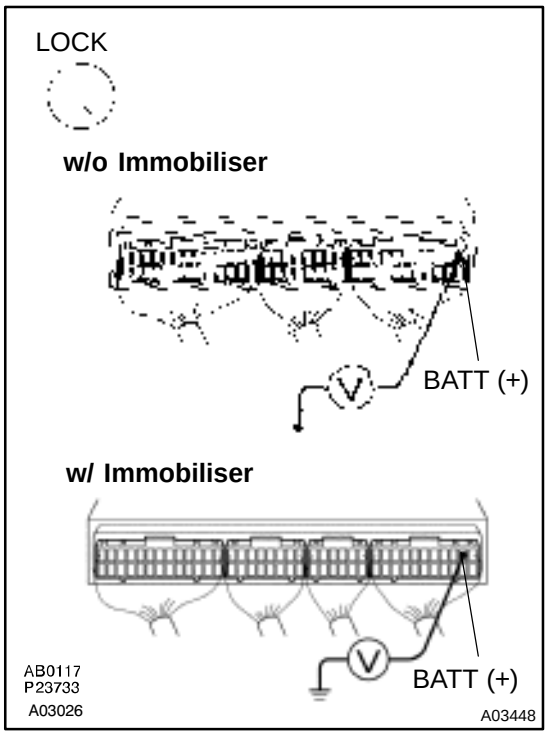

PREPARATION:
Remove the glove compartment (See page SF–64).
CHECK:
Measure voltage between terminal BATT of the ECM connector and body ground.
OK:
Voltage 9 ~ 14 V

OK	Check and replace ECM (See page IN–31).

NG

2	Check EFI fuse.

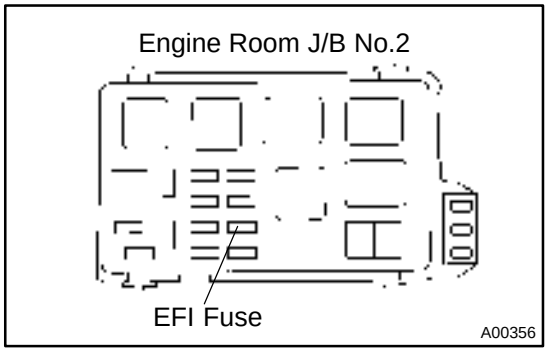

PREPARATION:
Remove the EFI fuse from the engine room J/B No.2.
CHECK:
Check continuity of the EFI fuse.
OK:
Continuity

NG	Check for short in all harness and components connected to EFI fuse.

OK

Check and repair harness or connector between battery and EFI fuse, and EFI fuse and ECM (See page IN–31).

DI01J–05

DTC	P1780	Park/Neutral Position Switch Malfunction (Only for A/T)

CIRCUIT DESCRIPTION

The park/neutral position switch goes on when the shift lever is in the N or P shift position. When it goes on terminal NSW of the ECM is grounded to body ground via the starter relay thus the terminal NSW voltage becomes 0V. When the shift lever is in the D, 2, L or R position, the park/neutral position switch goes off, so the voltage of ECM. Terminal NSW becomes battery positive voltage, the voltage of the ECM internal power source.
If the shift lever is moved from the N position to the D position, this signal is used for air–fuel ratio correction and for idle speed control (estimated control), etc.

DTC No.	DTC Detecting Condition	Trouble Area
P1780	2 or more switches are ON simultaneously for P, R, N, D, 2 and L positions (2 trip detection logic)	●Short in park/neutral position switch circuit ●Park/neutral position switch ●ECM
	When driving under conditions (a) and (b) for 30 sec. or more park/neutral position switch is ON (N position): (2 trip detection logic) (a) Vehicle speed: 80 km/h (50 mph) or more (b) Engine speed: 2,000 ~ 5,000 rpm	

HINT:
After confirming DTC P1780, use the TOYOTA hand–held tester to confirm the PNP switch signal from the CURRENT DATA.

WIRING DIAGRAM

Refer to DTC P1780 on page DI–424.

INSPECTION PROCEDURE

HINT:
Read freeze frame data using TOYOTA hand–held tester or OBD II scan tool. Because freeze frame records the engine conditions when the malfunction is detected, when troubleshooting it is useful for determining whether the vehicle was running or stopped, the engine warmed up or not, the air–fuel ratio lean or rich, etc. at the time of the malfunction.
Refer to DTC P1780 on DI–424.

Starter Signal Circuit

CIRCUIT DESCRIPTION

When the engine is cranked, the intake air flow is slow, so fuel vaporization is poor. A rich mixture is therefore necessary in order to achieve good startability. While the engine is being cranked, the battery positive voltage is applied to terminal STA of the ECM. The starter signal is mainly used to increase the fuel injection volume for the starting injection control and after–start injection control.

WIRING DIAGRAM

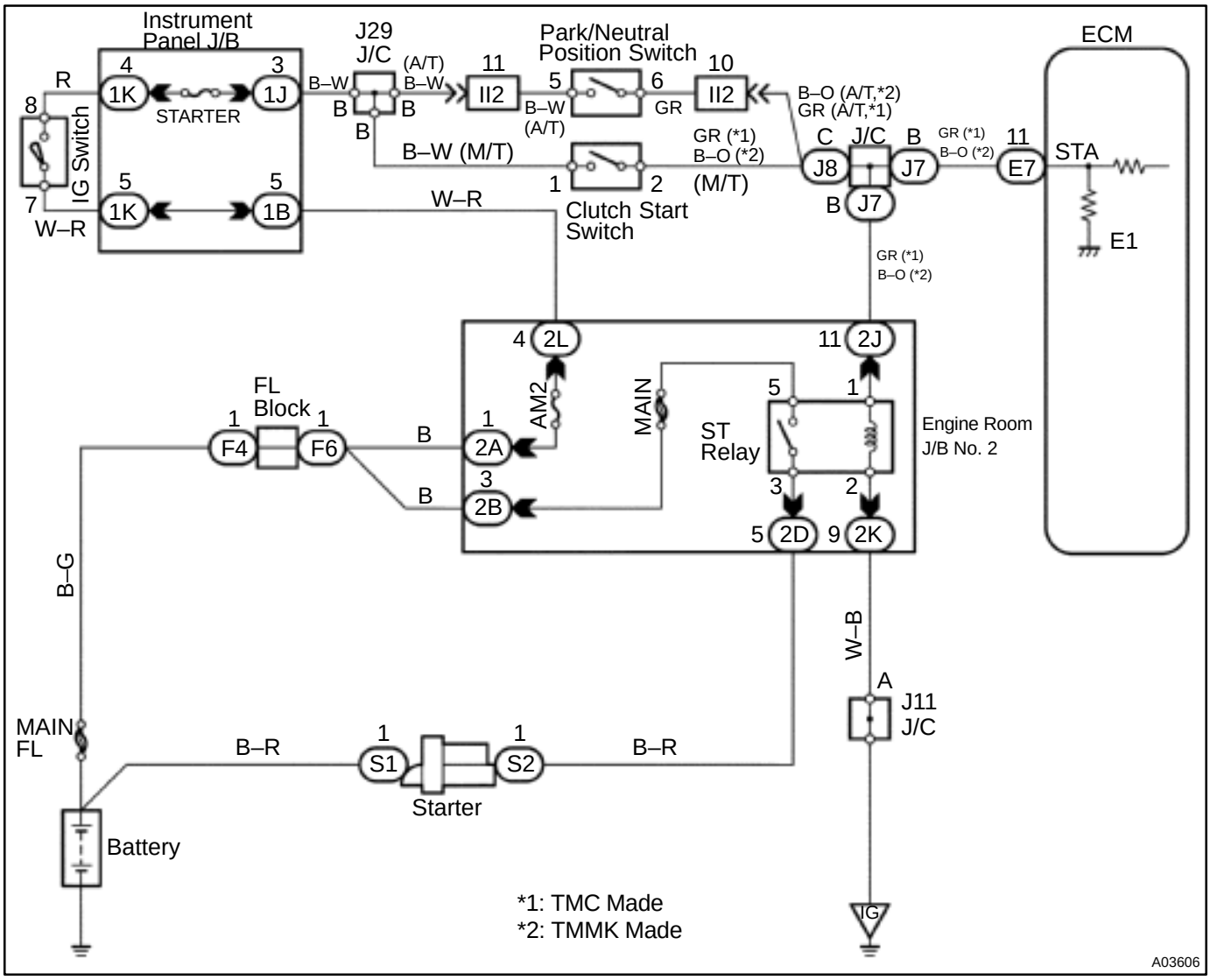

INSPECTION PROCEDURE

HINT:

This diagnostic chart is based on the premise that the engine is cranked normally. If the engine is not cranked, proceed to the problem symptoms table on page DI–28.

TOYOTA hand–held tester:

1	**Connect TOYOTA hand–held tester, and check STA signal.**

PREPARATION:

(a) Connect the TOYOTA hand–held tester to the DLC3.

(b) Turn the ignition switch ON and push the TOYOTA hand–held tester main switch ON.

CHECK:

Read STA signal on the TOYOTA hand–held tester while the starter operates.

OK:

Ignition Switch Position	ON	START
STA signal	OFF	ON

OK → **Proceed to next circuit inspection shown on problem symptoms table (See page DI–28).**

NG

2	**Check for open in harness and connector between ECM and starter relay (Marking: ST) (See page IN–31).**

NG → **Repair or replace harness or connector.**

OK

Check and replace ECM (See page IN–31).

OBD II scan tool (excluding TOYOTA hand–held tester):

HINT:

This diagnostic chart is based on the premise that the engine is cranked normally. If the engine is not cranked, proceed to the problem symptoms table on page DI–28.

1	**Check voltage between terminal STA of ECM connector and body ground.**

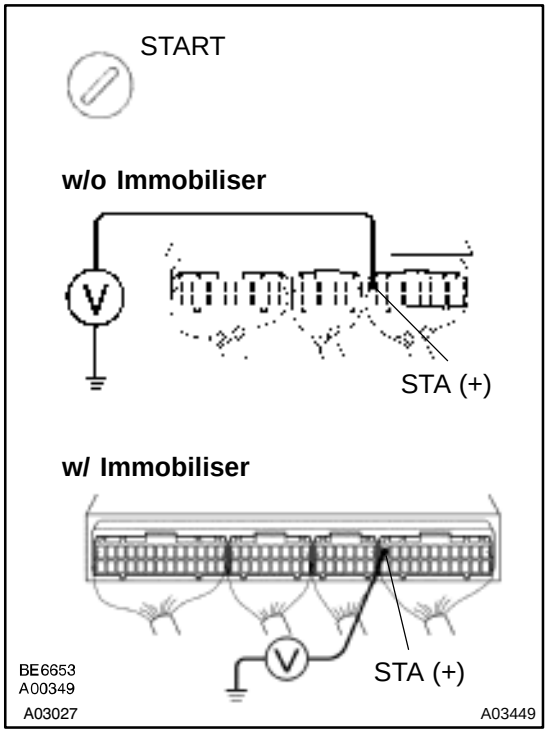

PREPARATION:

(a) Remove the glove compartment (See page SF–64).

(b) Turn the ignition switch ON.

CHECK:

Measure voltage between terminal STA of the ECM connector and body ground, during the engine cranking.

OK:

Voltage: 6 V or more

OK	**Proceed to next circuit inspection shown on problem symptoms table (See page DI–28).**

NG

2	**Check for open in harness and connector between ECM and starter relay (Marking: ST) (See page IN–31).**

NG	**Repair or replace harness or connector.**

OK

Check and replace ECM (See page IN–31).

DI01L–05

ECM Power Source Circuit

CIRCUIT DESCRIPTION

When the ignition switch is turned ON, battery positive voltage is applied to the coil, closing the contacts of the EFI main relay (Marking: EFI) and supplying power to terminal +B of the ECM.

WIRING DIAGRAM

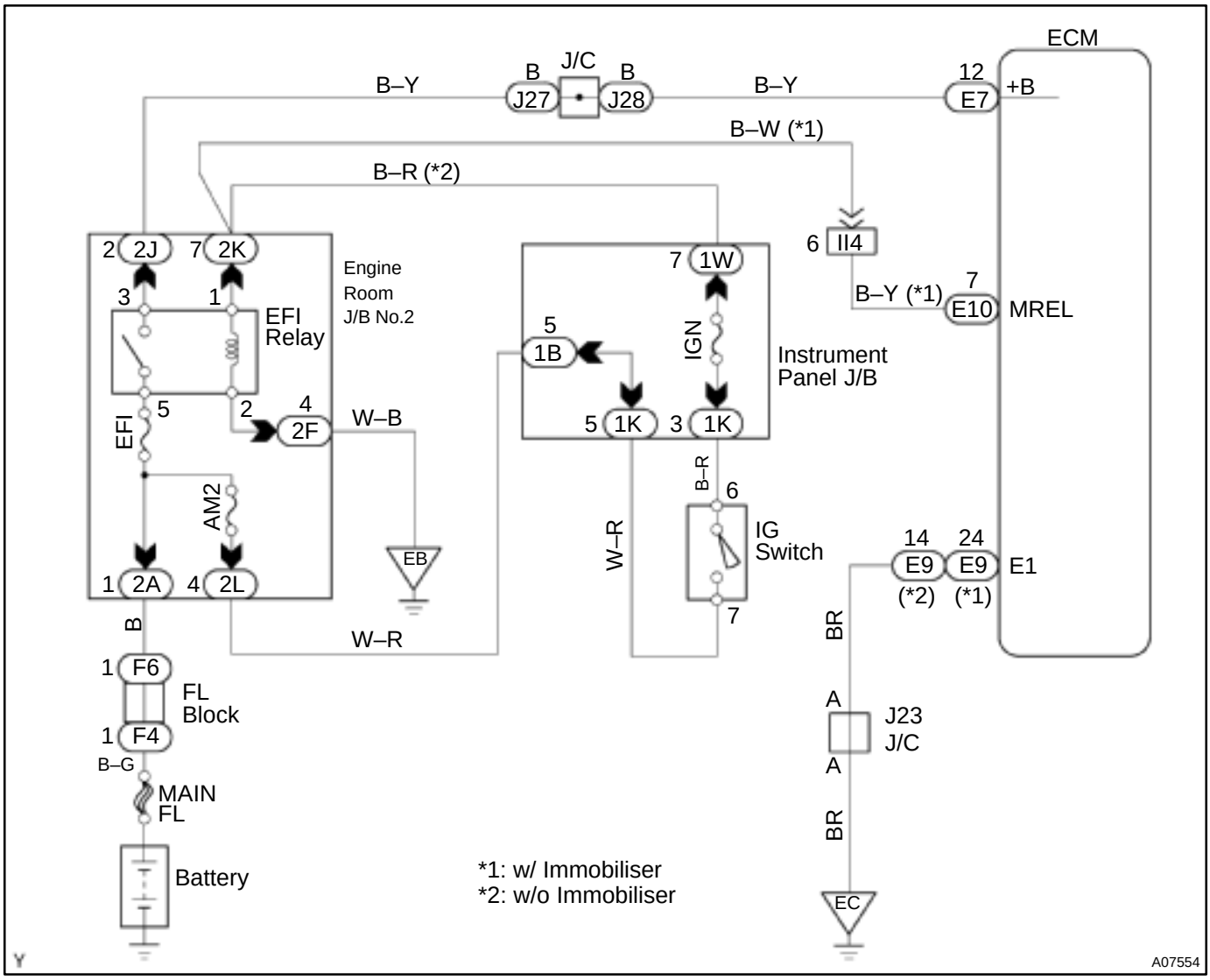

INSPECTION PROCEDURE

1	**Check voltage between terminals + B and E1 of ECM connector.**

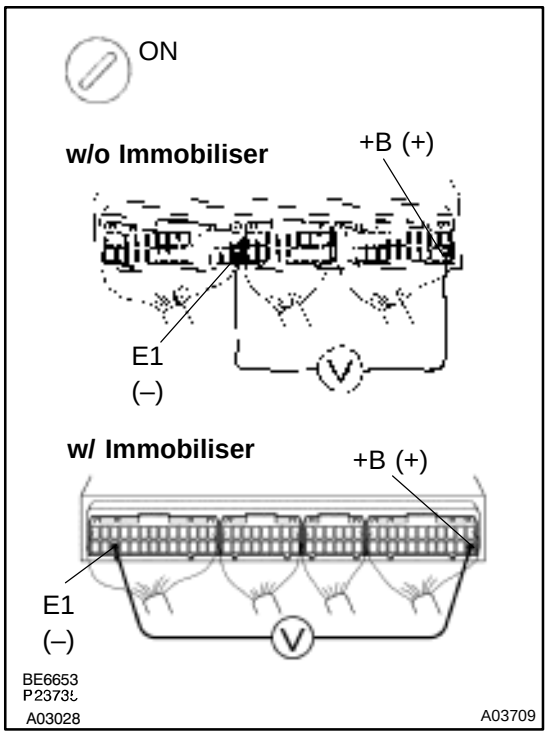

PREPARATION:

(a) Remove the glove compartment (See page SF–64).

(b) Turn the ignition switch ON.

CHECK:

Measure voltage between terminals + B and E1 of the ECM connector.

OK:

Voltage: 9 ~ 14 V

OK	**Proceed to next circuit inspection shown on Problem symptoms table (See page DI–28).**

NG

2	**Check for open in harness and connector between terminal E1 of ECM and body ground (See page IN–31).**

NG	**Repair or replace harness or connector.**

OK

3	**Check EFI main relay (Marking: EFI) (See page SF–40).**

NG	**Replace EFI main relay.**

OK

4	**Check EFI fuse (See page DI–173, step 2).**

NG → **Check for short in all harness and components connected to EFI fuse.**

OK

5	**Check for open in harness and connector between EFI main relay (Marking: EFI) and battery, and EFI main relay and ECM (See page IN–31).**

NG → **Repair or replace harness or connector.**

OK

6	**Check IGN fuse.**

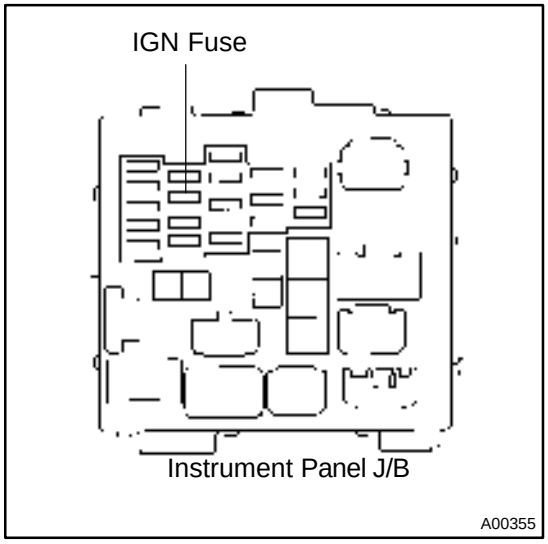

PREPARATION:
Remove the IGN fuse from the instrument panel J/B.
CHECK:
Check continuity of the IGN fuse.
OK:
Continuity

NG → **Check for short in all harness and components connected to IGN fuse.**

OK

7	Check ignition switch (See page BE–14).

NG → Replace ignition switch.

OK →

Check for open in harness and connector between IG switch and EFI main relay, and EFI main relay and body ground (See page IN–31).

DI01M–05

Fuel Pump Control Circuit

CIRCUIT DESCRIPTION

In the diagram below, when the engine is cranked, current flows from terminal ST of the ignition switch to the starter relay coil and also current flows to terminal STA of ECM (STA signal).
When the STA signal and NE signal are input to the ECM, Tr is turned ON, current flows to coil of the circuit opening relay, the relay switches on, power is supplied to the fuel pump and the fuel pump operates.
While the NE signal is generated (engine running), the ECM keeps Tr ON (circuit opening relay ON) and the fuel pump also keeps operating.

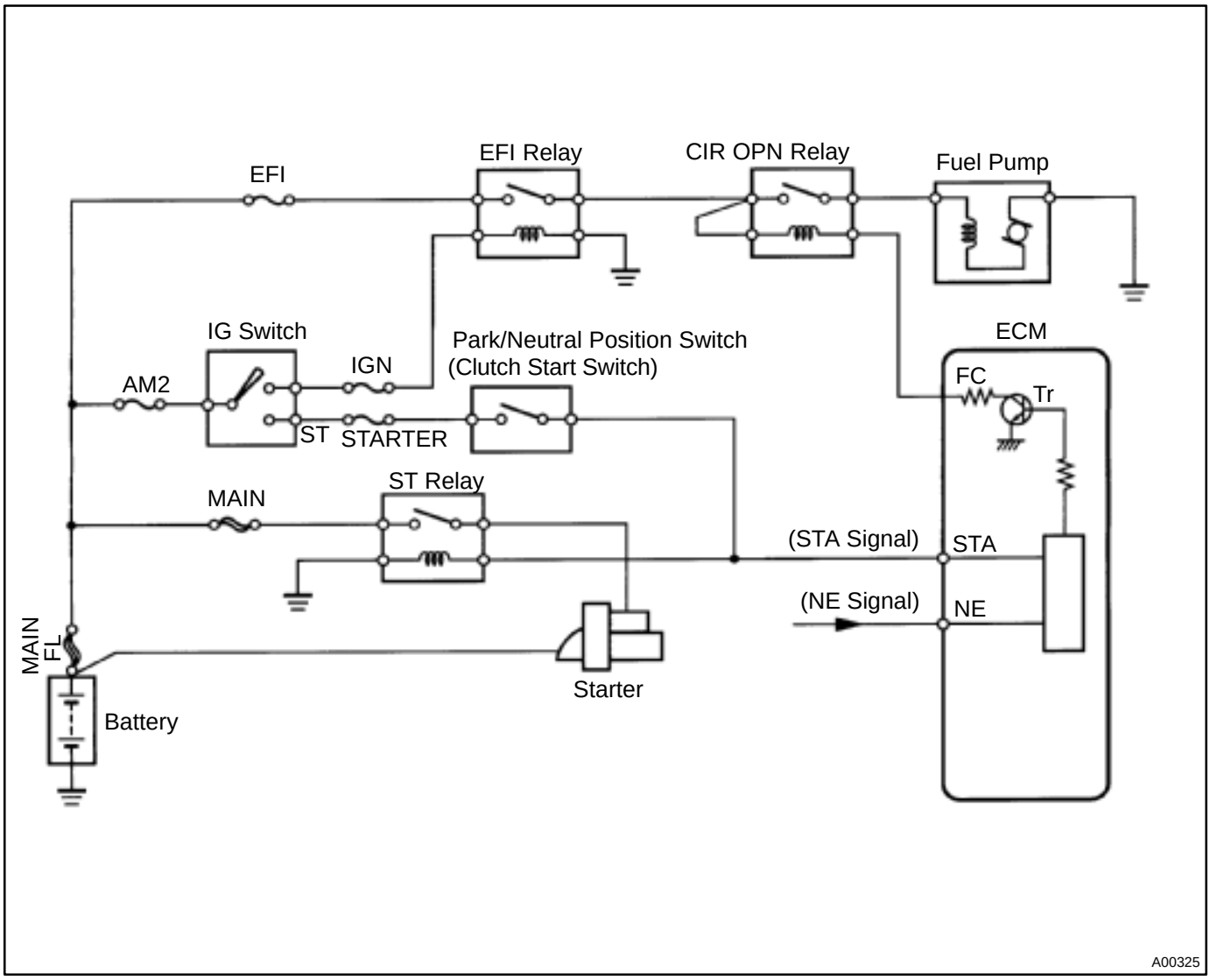

WIRING DIAGRAM

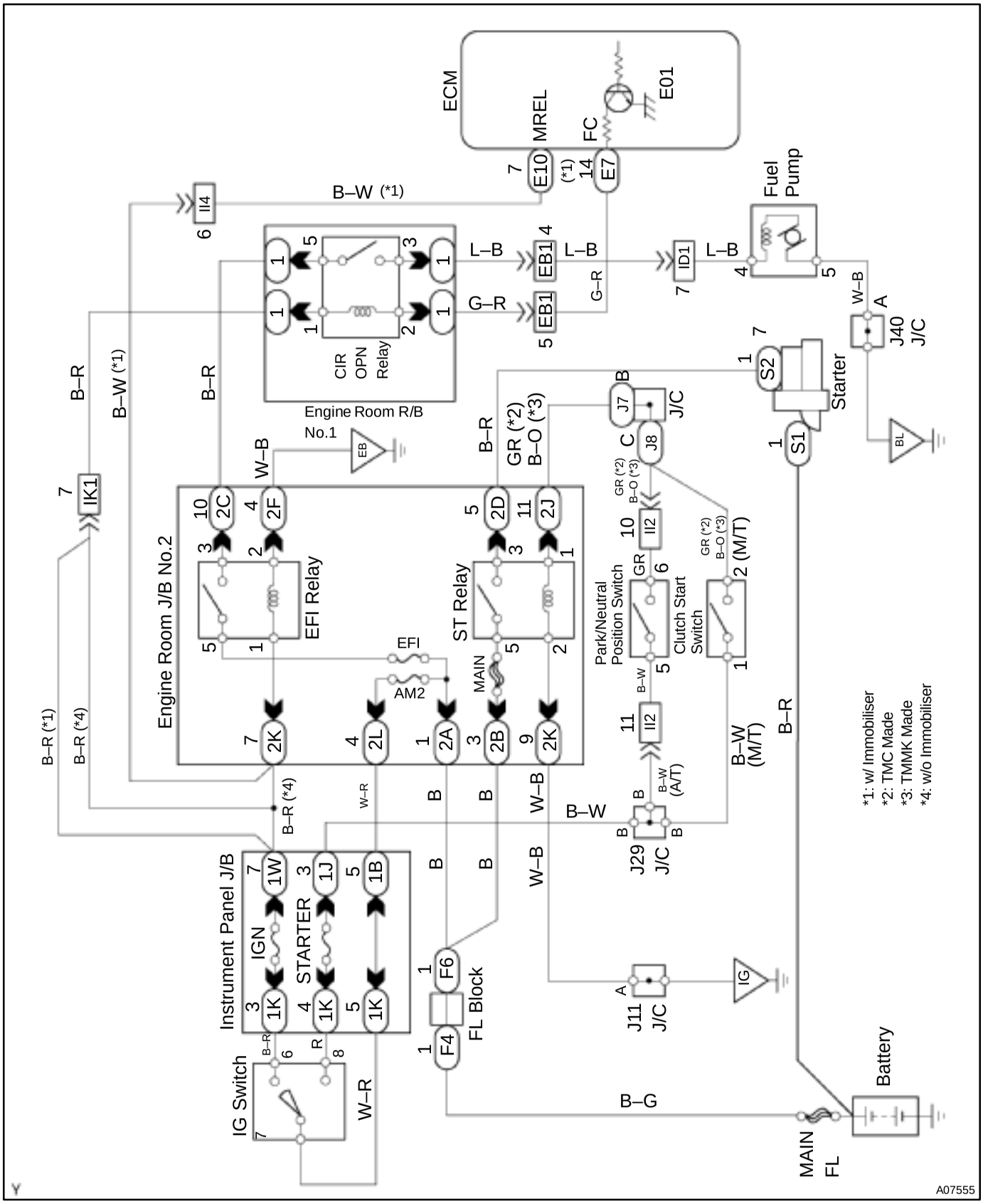

INSPECTION PROCEDURE
TOYOTA hand–held tester:

1	Connect TOYOTA hand–held tester, and check operation of fuel pump (See page DI–3).

OK → Proceed to next circuit inspection shown on problem symptoms table (See page DI–28).

NG

2	Check for ECM power source circuit (See page DI–179).

NG → Repair or replace.

OK

3	Check circuit opening relay (Marking: CIR OPN) (See page SF–41).

NG → Replace circuit opening relay.

OK

4	Check voltage between terminal FC of ECM connector and body ground.

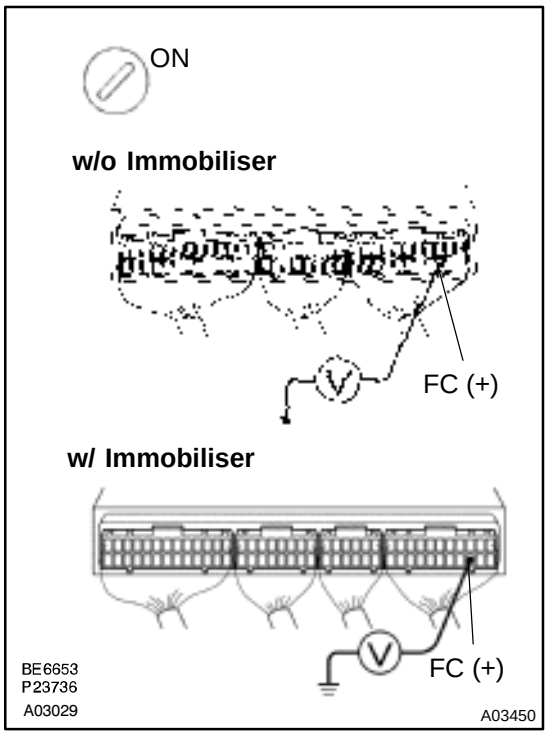

PREPARATION:

(a) Remove the glove compartment (See page SF–64).

(b) Turn the ignition switch ON.

CHECK:

Measure voltage between terminal FC of the ECM connector and body ground.

OK:

Voltage 9 ~ 14 V

OK	Go to step 5.

NG

Check for open in harness and connector between EFI main relay, and circuit opening relay and circuit opening relay and ECM (See page IN–31).

5	Check fuel pump (See page SF–6).

NG	Repair or replace fuel pump.

OK

6	**Check for open in harness and connector between circuit opening relay (Marking: CIR OPN) and fuel pump, and fuel pump and body ground (See page IN–31).**

NG → **Repair or replace harness or connector.**

OK

Check and replace ECM (See page IN–31).

OBD II scan tool (excluding TOYOTA hand–held tester):

1	**Check operation of fuel pump.**

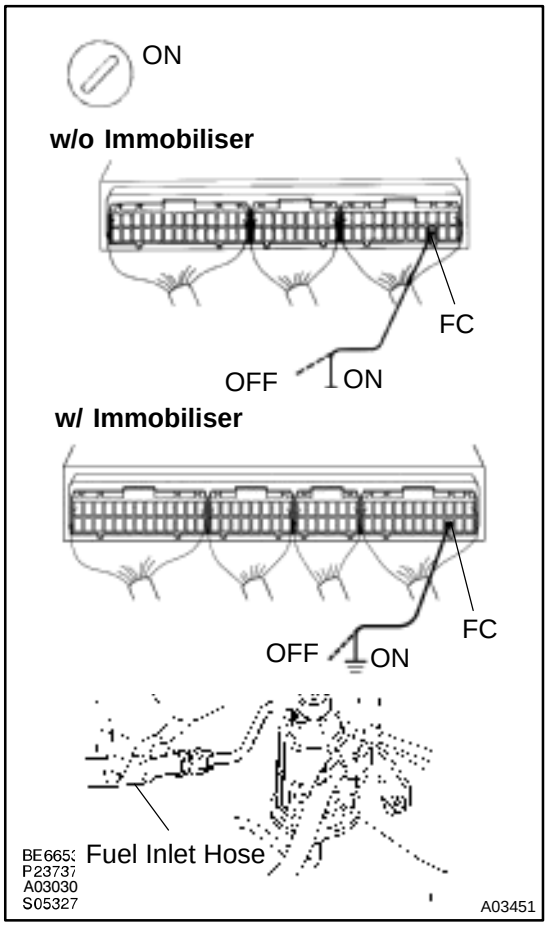

PREPARATION:

(a) Remove the glove compartment (See page SF–64).

(b) Turn the ignition switch ON.

CHECK:

(a) Connect between terminal FC of the ECM connector and body ground.

(b) Check for fuel pressure in the fuel inlet hose when it is pinched off.

OK:

There is pressure in fuel inlet hose.

HINT:

At this time, you will hear a fuel return flowing noise.

OK → **Proceed to next circuit inspection shown on problem symptoms table (See page DI–28).**

NG

2	Check for ECM power source circuit (See page DI–179).

NG → Repair or replace.

OK

3	Check circuit opening relay (Marking: CIR OPN) (See page SF–41).

NG → Replace circuit opening relay.

OK

4	Check voltage between terminal FC of ECM connector and body ground (See page DI–183, step 4).

OK → Go to step 5.

NG

Check for open in harness and connector between EFI main relay and circuit opening relay, and circuit opening relay and ECM (See page IN–31).

5	Check fuel pump (See page SF–6).

NG → Repair or replace fuel pump.

OK

6	**Check for open in harness and connector between circuit opening relay (Marking: CIR OPN) and fuel pump, and fuel pump and body ground (See page IN–31).**

NG → **Repair or replace harness or connector.**

OK

Check and replace ECM (See page IN–31).

A/C Compressor Lock Sencor Circuit

CIRCUIT DESCRIPTION

This sensor sends 1 pulse par engine revolution to the ECM. If the number ratio of the compressor speed divided by the engine speed is smaller than a predetermined value, the ECM turns the compressor off. And, the indicator flashes at about 1 second intervals.

WIRING DIAGRAM

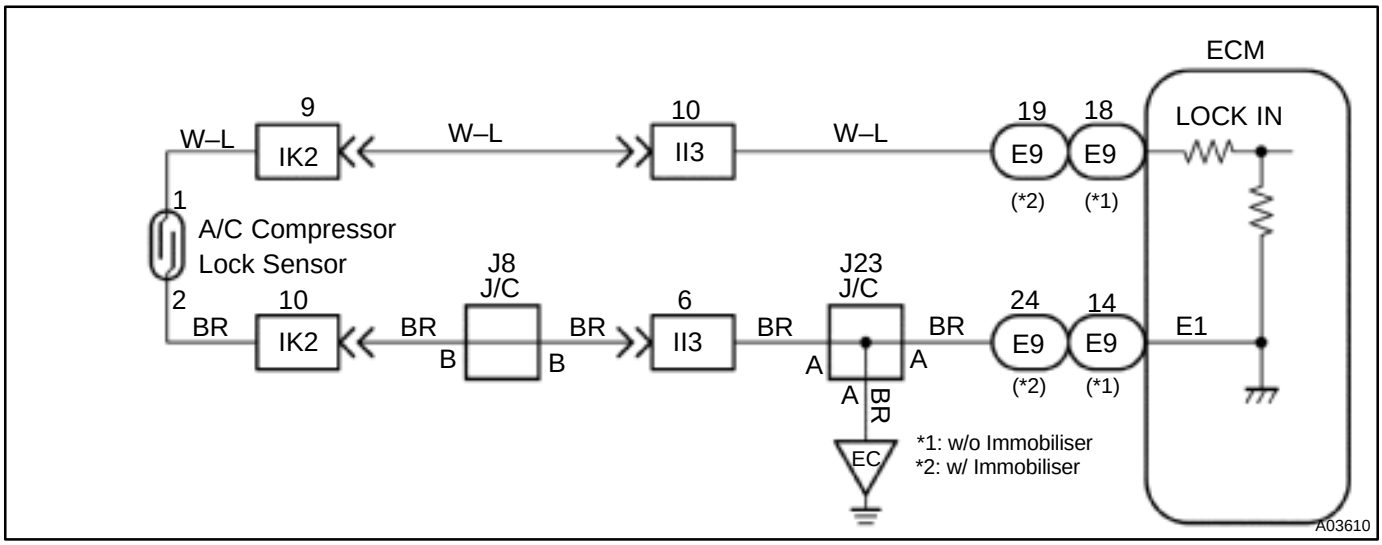

INSPECTION PROCEDURE

1	**Check compressor.**

PREPARATION:

(a) Check the compressor drive belt tension (See page AC–16).

(b) Check if the compressor does not lock during operation with the engine started and blower switch and A/C switch ON.

NG → **Adjust drive belt tension or repair compressor (See page AC–17).**

OK

2	Check compressor lock sensor.

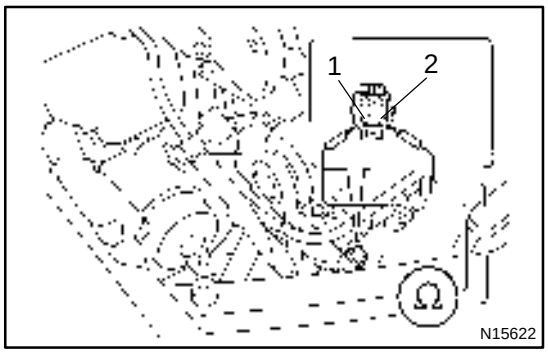

PREPARATION:
Disconnect the compressor lock sensor connector.
CHECK:
Measure resistance between terminals 1 and 2 of the compressor lock sensor connector.
OK:
Resistance: 65 – 125 Ω at 20˚C (68˚F)

Reference: Inspection using oscilloscope

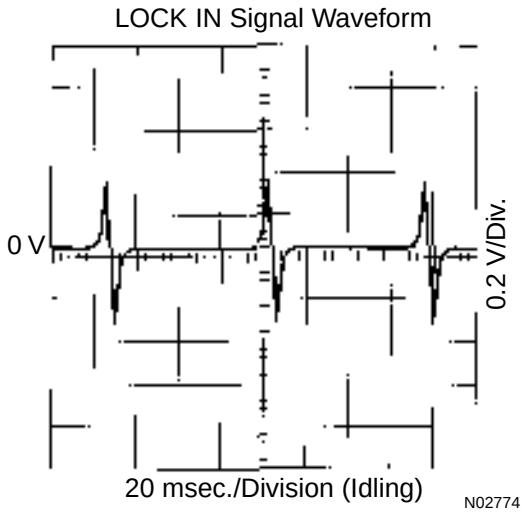

During cranking or idling, measure voltage between terminals LOCK IN and E1 of the ECM.
HINT:
The correct waveform appears as shown in the illustration on the left.

NG → **Replace compressor lock sensor (See page AC–40).**

OK

3	Check harness and connector between A/C compressor lock sensor and ECM (See page IN–31).

NG → **Repair or replace harness or connector.**

OK

Check and replace ECM (See page IN–31).

DI01O–04

A/C Evaporator Temp. Sensor Circuit

CIRCUIT DESCRIPTION

This sensor detects the temperature inside the cooling unit and sends the appropriate signals to the ECM.

WIRING DIAGRAM

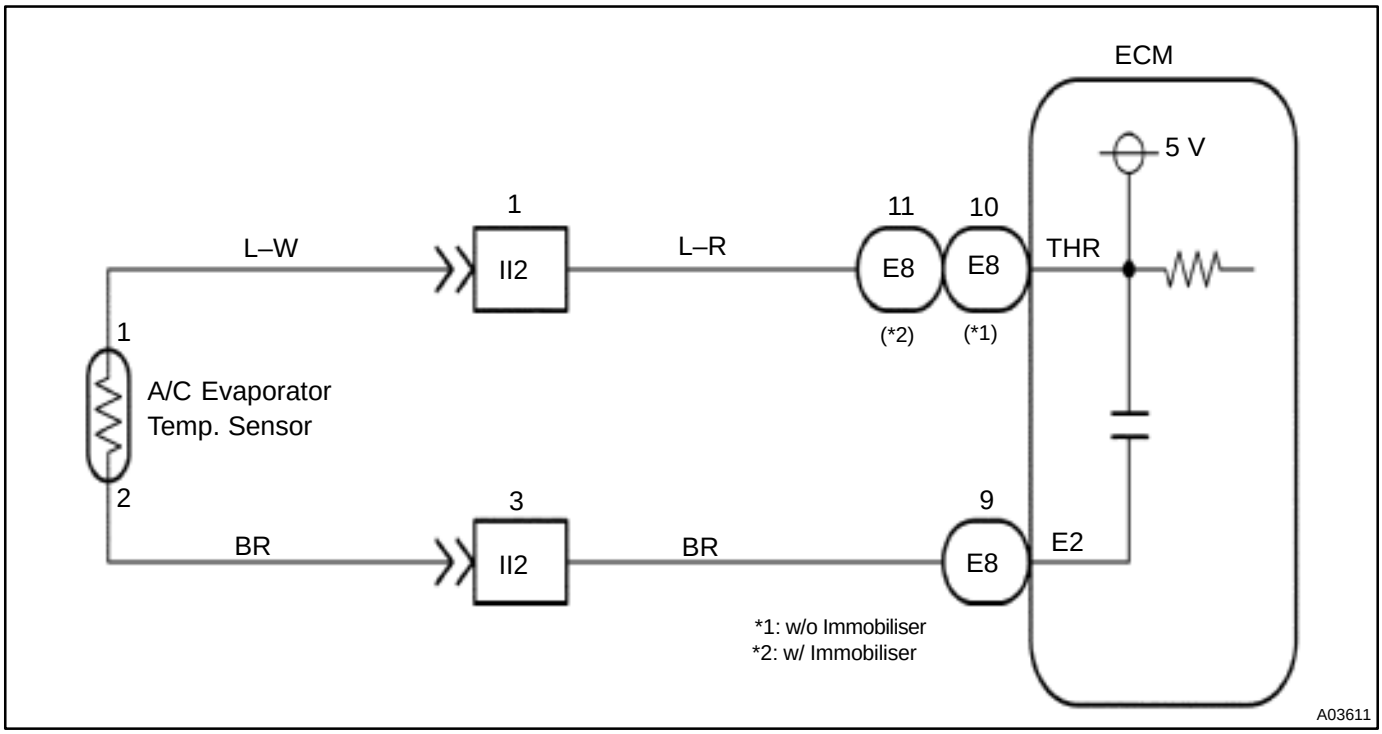

INSPECTION PROCEDURE

1	Check voltage between terminals THR and E2 of ECM connector.

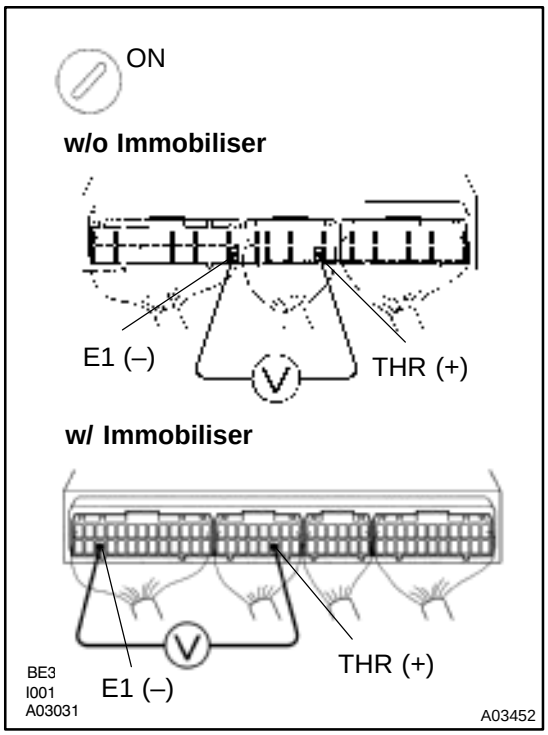

PREPARATION:

(a) Remove the glove compartment (See page SF–64).

(b) Turn the ignition switch ON.

CHECK:

Measure voltage between terminals THR and E1 of the ECM connector at each temperature.

OK:

Voltage

at 0˚C (32 F): 2.2 – 2.6 V

at 15˚C (59˚F): 1.4 – 1.8 V

HINT:

As the temperature increases, the voltage decreases.

OK	Check and replace ECM (See page IN–31).

NG

2	Check A/C evaporator temp. sensor.

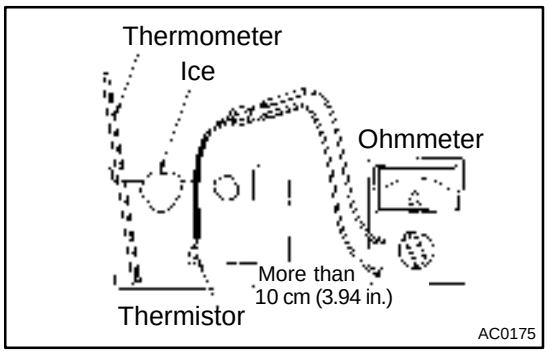

PREPARATION:

Remove the A/C evaporator temp. sensor
(See page AC–30).

CHECK:

Check resistance between terminals 1 and 2 of the A/C evaporator temp. sensor connector at each temperature.

OK:

Resistance

at 0˚C (32˚F): 4.6 – 5.1 Ω

at 15˚C (59˚F): 2.1 – 2.6 Ω

HINT:

As the temperature increases, the voltage decreases.

NG	Replace A/C evaporator temp. sensor.

OK

3	Check harness and connector between A/C evaporator temp. sensor and ECM (See page IN–31).

NG → Repair or replace harness or connector.

OK →

Check and replace ECM (See page IN–31).

ENGINE (1MZ–FE)

DI078–08

HOW TO PROCEED WITH TROUBLESHOOTING

Troubleshoot in accordance with the procedure on the following page.

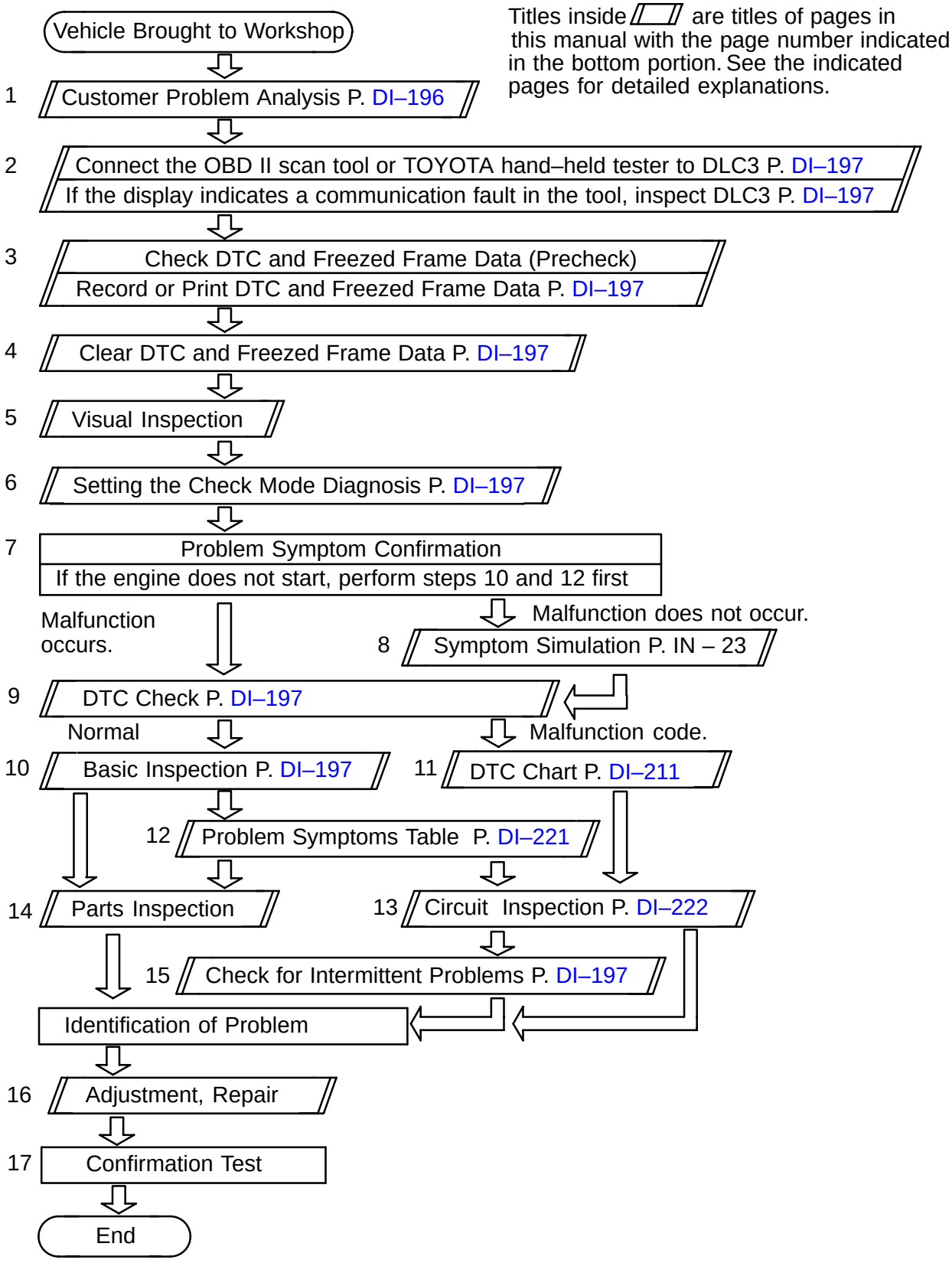

Titles inside ▱ are titles of pages in this manual with the page number indicated in the bottom portion. See the indicated pages for detailed explanations.

DI079–02

CUSTOMER PROBLEM ANALYSIS CHECK

ENGINE CONTROL SYSTEM Check Sheet

Inspector's Name

Customer's Name		Model and Model Year	
Driver's Name		Frame No.	
Date Vehicle Brought in		Engine Model	
License No.		Odometer Reading	km miles

Problem Symptoms	☐ Engine does not Start	☐ Engine does not crank ☐ No initial combustion ☐ No complete combustion
	☐ Difficult to Start	☐ Engine cranks slowly ☐ Other _____
	☐ Poor Idling	☐ Incorrect first idle ☐ Idling rpm is abnormal ☐ High (rpm) ☐ Low (rpm) ☐ Rough idling ☐ Other _____
	☐ Poor Driveability	☐ Hesitation ☐ Back fire ☐ Muffler explosion (after–fire) ☐ Surging ☐ Knocking ☐ Other _____
	☐ Engine Stall	☐ Soon after starting ☐ After accelerator pedal depressed ☐ After accelerator pedal released ☐ During A/C operation ☐ Shifting from N to D ☐ Other _____
	☐ Others	

Dates Problem Occurred		
Problem Frequency		☐ Constant ☐ Sometimes (times per day/month) ☐ Once only ☐ Other _____
Condition When Problem Occurs	Weather	☐ Fine ☐ Cloudy ☐ Rainy ☐ Snowy ☐ Various/Other _____
	Outdoor Temperature	☐ Hot ☐ Warm ☐ Cool ☐ Cold (approx. ____°F/____°C)
	Place	☐ Highway ☐ Suburbs ☐ Inner city ☐ Uphill ☐ Downhill ☐ Rough road ☐ Other _____
	Engine Temperature	☐ Cold ☐ Warming up ☐ After warming up ☐ Any temperature ☐ Other _____
	Engine Operation	☐ Starting ☐ Just after starting (min.) ☐ Idling ☐ Racing ☐ Driving ☐ Constant speed ☐ Acceleration ☐ Deceleration ☐ A/C switch ON/OFF ☐ Other _____

Condition of MIL		☐ Remains on	☐ Sometimes light up ☐ Does not light up
DTC Inspection	Normal Mode (Precheck)	☐ Normal	☐ Malfunction code(s) (code) ☐ Freezed frame data ( )
	Check Mode	☐ Normal	☐ Malfunction code(s) (code) ☐ Freezed frame data ( )

DI07A–06

PRE–CHECK

1. DIAGNOSIS SYSTEM

(a) Description

- When troubleshooting OBD II vehicles, the only difference from the usual troubleshooting procedure is that you connect to the vehicle the OBD II scan tool complying with SAE J1978 or TOYOTA hand–held tester, and read off various data output from the vehicle's ECM.

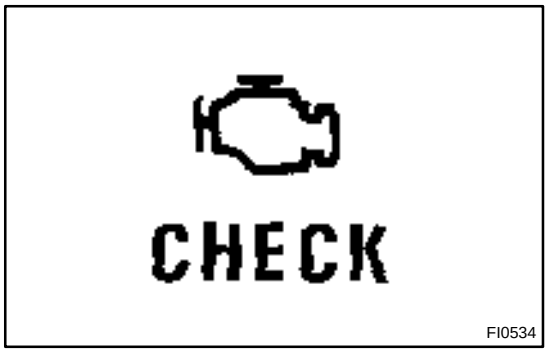

- OBD II regulations require that the vehicle's on–board computer lights up the Malfunction Indicator Lamp (MIL) on the instrument panel when the computer detects a malfunction in the emission control system/components or in the powertrain control components which affect vehicle emissions, or a malfunction in the computer. In addition to the MIL lighting up when a malfunction is detected, the applicable Diagnostic Trouble Codes (DTC) prescribed by SAE J2012 are recorded in the ECM memory (See page DI–211).

If the malfunction does not reoccur in 3 consecutive trips, the MIL goes off but the DTCs remain recorded in the ECM memory.

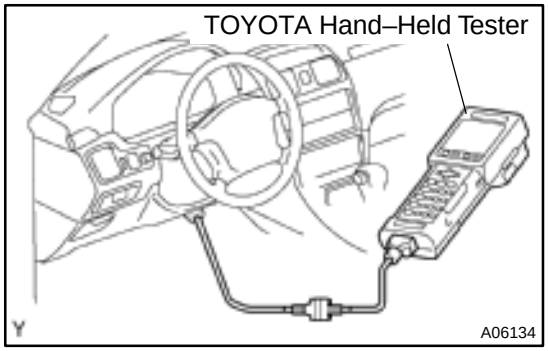

- To check the DTC, connect the OBD II scan tool or TOYOTA hand–held tester to Data Link Connector 3 (DLC3) on the vehicle. The OBD II scan tool or TOYOTA hand–held tester also enables you to erase the DTC and check freezed frame data and various forms of engine data (For operating instructions, see the OBD II scan tool's instruction book.). DTC include SAE controlled codes and manufacturer controlled codes. SAE controlled codes must be set as prescribed by the SAE, while manufacturer controlled codes can be set freely by the manufacturer within the prescribed limits (See DTC chart on page DI–211).

- The diagnosis system operates in normal mode during normal vehicle use. It also has a check mode for technicians to simulate malfunction symptoms and troubleshoot. Most DTC use 2 trip detection logic* to prevent erroneous detection, and ensure thorough malfunction detection. By switching the ECM to check mode when troubleshooting, the technician can cause the MIL to light up for a malfunction that is only detected once or momentarily (TOYOTA hand–held tester only). (See page DI–197)
- *2 trip detection logic:
  When a malfunction is first detected, the malfunction is temporarily stored in the ECM memory. (1st trip)

If the same malfunction is detected again during the second drive test, this second detection causes the MIL to light up. (2nd trip) (However, the IG switch must be turned OFF between the 1st trip and the 2nd trip.).

- Freeze frame data:
  Freeze frame data records the engine condition when a misfire (DTCs P0300 ~ P0306) or fuel trim malfunction (DTCs P0171, P0172) or other malfunction (first malfunction only), is detected.
  Because freeze frame data records the engine conditions (fuel system, calculated load, engine coolant temperature, fuel trim, engine speed, vehicle speed, etc.) when the malfunction is detected, when troubleshooting it is useful for determining whether the vehicle was running or stopped, the engine warmed up or not, the air–fuel ratio lean or rich, etc. at the time of the malfunction.
- Priorities for troubleshooting:

If troubleshooting priorities for multiple DTC are given in the applicable DTC chart, these should be followed.
If no instructions are given troubleshoot DTC according to the following priorities.

(1) DTC other than fuel trim malfunction (DTCs P0171, P0172), EGR (DTCs P0401, P0402) and misfire (DTCs P0300 ~ P0306).
(2) Fuel trim malfunction (DTCs P0171, P0172) and EGR (DTCs P0401, P0402).
(3) Misfire (DTCs P0300 ~ P0306).

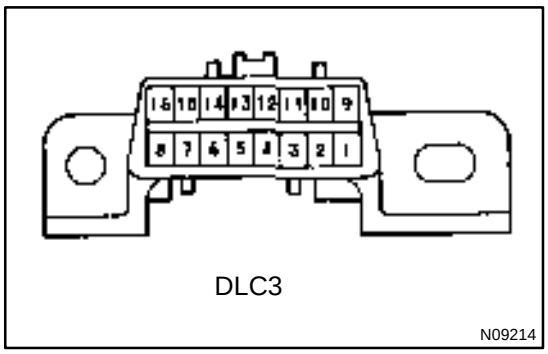

DLC3

(b) Check the DLC3.
The vehicle's ECM uses ISO 9141–2 for communication. The terminal arrangement of DLC3 complies with SAE J1962 and matches the ISO 9141–2 format.

Terminal No.	Connection / Voltage or Resistance	Condition
7	Bus ⊕ Line / Pulse generation	During transmission
4	Chassis Ground ↔ Body Ground /1 Ω or less	Always
5	Signal Ground ↔ Body Ground /1 Ω or less	Always
16	Battery Positive ↔ Body Ground /9 ~ 14 V	Always

HINT:
If your display shows "UNABLE TO CONNECT TO VEHICLE" when you have connected the cable of the OBD II scan tool or TOYOTA hand–held tester to DLC3, turned the ignition switch ON and operated the scan tool, there is a problem on the vehicle side or tool side.

- If communication is normal when the tool is connected to another vehicle, inspect DLC3 on the original vehicle.
- If communication is still not possible when the tool is connected to another vehicle, the problem is probably in the tool itself, so consult the Service Department listed in the tool's instruction manual.

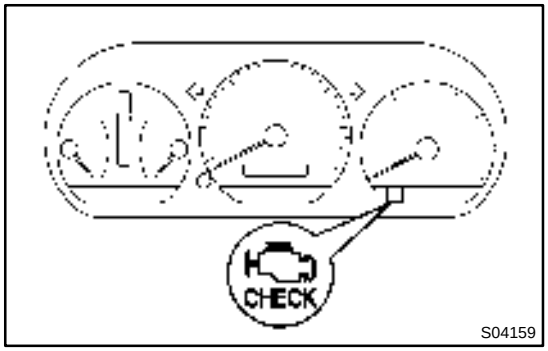

2. INSPECT DIAGNOSIS (Normal Mode)

(a) Check the MIL.
(1) The MIL comes on when the ignition switch is turned ON and the engine is not running.

HINT:
If the MIL does not light up, troubleshoot the combination meter (See page BE–46).

(2) When the engine started, the MIL should go off. If the lamp remains on, the diagnosis system has detected a malfunction or abnormality in the system.

(b) Check the DTC.

NOTICE:
TOYOTA hand–held tester only: When the diagnosis system is switched from normal mode to check mode, it erases all DTC and freezed frame data recorded in normal mode. So before switching modes, always check the DTC and freezed frame data, and note them down.

(1) Prepare the OBD II scan tool (complying with SAE J1978) or TOYOTA hand–held tester.

(2) Connect the OBD II scan tool or TOYOTA hand–held tester to DLC3 at the lower center of the instrument panel.
(3) Turn the ignition switch ON and push the OBD II scan tool or TOYOTA hand–held tester switch ON.
(4) Use the OBD II scan tool or TOYOTA hand–held tester to check the DTC and freezed frame data and note them down (For operating instructions, see the OBD II scan tool's instruction book.).
(5) See page DI–197 to confirm the details of the DTC.

NOTICE:

- **When simulating symptoms with an OBD II scan tool (excluding TOYOTA hand–held tester) to check the DTC, use normal mode. For code on the DTC chart subject to "2 trip detection logic", performe the following either action.**
- **Turn the ignition switch OFF after the symptom is simulated the first time. Then repeat the simulation process again. When the problem has been simulated twice, the MIL lights up and the DTCs are recorded in the ECM.**
- **Check the 1st trip DTC using Mode 7 (Continuous Test Results) for SAE J1979.**

(c) Clear the DTC.
The DTCs and freezed frame data will be erased by either action.

- Operating the OBD II scan tool (complying with SAE J1978) or TOYOTA hand–held tester to erase the codes. (See the OBD II scan tool's instruction book for operating instructions.)
- Disconnecting the battery terminals or EFI fuse.

NOTICE:

If the TOYOTA hand–held tester switches the ECM from normal mode to check mode or vice–versa, or if the ignition switch is turned from ON to ACC or OFF during check mode, the DTCs and freezed frame data will be erased.

3. INSPECT DIAGNOSIS (Check Mode)

HINT:

TOYOTA hand–held tester only:

Compared to the normal mode, the check mode has an increased sensitivity to detect malfunctions.

Furthermore, the same diagnostic items which are detected in the normal mode can also be detected in the check mode.

(a) Check the DTC.

(1) Initial conditions.

- Battery positive voltage 11 V or more
- Throttle valve fully closed
- Transmission in ”P” or ”N” position
- Air conditioning switched OFF

(2) Turn ignition switch OFF.

(3) Prepare the TOYOTA hand–held tester.

(4) Connect the TOYOTA hand–held tester to the DLC3 at the lower center of the instrument panel.

(5) Turn the ignition switch ON and push the TOYOTA hand–held tester switch ON.

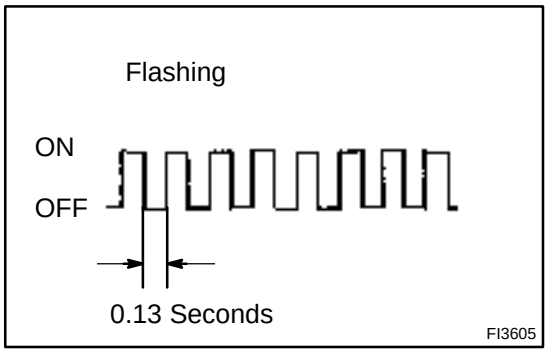

(6) Switch the TOYOTA hand–held tester normal mode to check mode (Check that the MIL flashes.).

NOTICE:

If the TOYOTA hand–held tester switches the ECM from normal mode to check mode or vice–versa, or if the ignition switch is turned from ON to ACC or OFF during check mode, the DTC and freezed frame data will be erased.

(7) Start the engine (The MIL goes out after the engine start.).

(8) Simulate the conditions of the malfunction described by the customer.

NOTICE:

Leave the ignition switch ON until you have checked the DTC, etc.

(9) After simulating the malfunction conditions, use the TOYOTA hand–held tester diagnosis selector to check the DTC and freezed frame data, etc.

HINT:

Take care not to turn the ignition switch OFF. Turning the ignition switch OFF switches the diagnosis system from check mode to normal mode. So all DTC, etc. are erased.

(10) After checking the DTC, inspect the applicable circuit.

4. FAIL–SAFE CHART

If any of the following codes is recorded, the ECM enters fail–safe mode.

DTC No.	Fail–Safe Operation	Fail–Safe Deactivation Conditions
P0100	Ignition timing fixed at 10° BTDC	Returned to normal condition
P0110	Intake air temperature is fixed at 20°C (68°F)	Returned to normal condition
P0115	Engine coolant temperature is fixed at 80°C (176°F)	Returned to normal condition
P0120	VTA is fixed at 0°	The following condition must be repeated at least 2 times consecutively (a) Vehicle speed: 0km/h (0mph) (b) VTA ≧ 0.1 V and > 0.95 V
P0135 P0141 P0155	The heater circuit in which an abnormality is detected is turned off	Ignition switch OFF
P0325 P0330	Max. timing retardation	Ignition switch OFF
P1300	Fuel cut	IGF signal is detected for 6 consecutive ignition

5. CHECK FOR INTERMITTENT PROBLEMS

TOYOTA HAND–HELD TESTER only:

By putting the vehicle's ECM in check mode, 1 trip detection logic is possible instead of 2 trip detection logic and sensitivity to detect open circuits is increased. This makes it easier to detect intermittent problems.

(1) Clear the DTC (See page DI–197).
(2) Set the check mode (See page DI–197).
(3) Perform a simulation test (See page IN–21).
(4) Check the connector and terminal (See page IN–31).
(5) Handle the connector (See page IN–31).

6. BASIC INSPECTION

When the malfunction code is not confirmed in the DTC check, troubleshooting should be performed in the order for all possible circuits to be considered as the causes of the problems. In many cases, by carrying out the basic engine check shown in the following flow chart, the location causing the problem can be found quickly and efficiently. Therefore, use of this check is essential in engine troubleshooting.

1	**Is battery positive voltage 11 V or more when engine is stopped ?**

NO → **Charge or replace battery.**

YES

2	**Is engine cranked?**

NO → **Proceed to page ST–18 and continue to trouble-shoot.**

YES

3	**Does engine start?**

NO → **Go to step 7.**

YES

4	**Check air filter.**

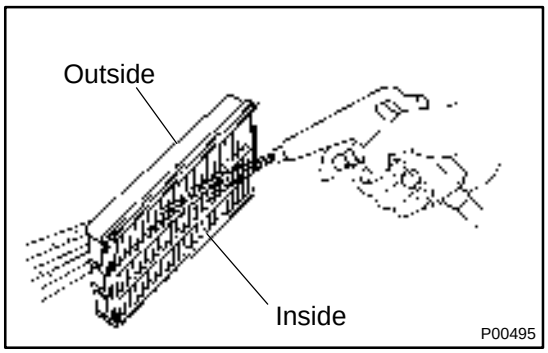

PREPARATION:
Remove the air filter.
CHECK:
Visually check that the air filter is not dirty or excessive oily.
HINT:
If necessary, clean the filter with compressed air. First blow from inside thoroughly, then blow from outside of the filter.

NG → **Repair or replace.**

OK

5	Check idle speed.

PREPARATION:

(a) Warm up the engine to normal operating temperature.
(b) Switch off all accessories.
(c) Switch off air conditioning.
(d) Shift transmission into ”N” position.
(e) Connect the OBD II scan tool or TOYOTA hand–held tester to DLC3 on the vehicle.

CHECK:

Use CURRENT DATA to check the idle speed.

OK:

Idle speed: 650 ~ 750 rpm

NG → **Proceed to problem symptoms table on page DI–221.**

OK

6	Check ignition timing.

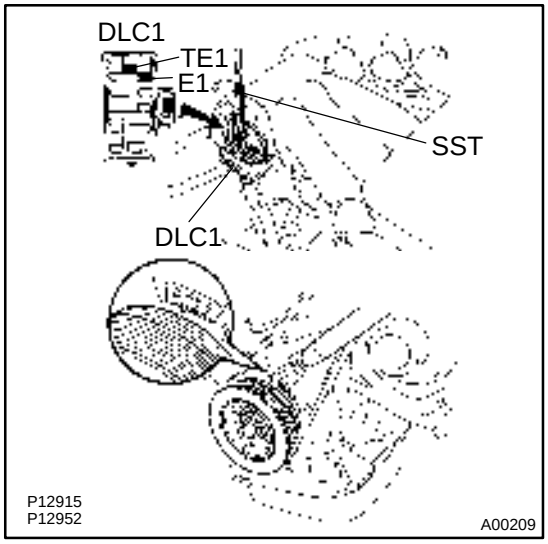

PREPARATION:

(a) Warm up the engine to normal operating temperature.
(b) Switch off all accessories.
(c) Switch off air conditioning.
(d) Shift transmission into ”N” position.
(e) Keep the engine speed at idle.
(f) Using SST, connect terminals TE1 and E1 of the DLC1.
SST 09843–18020
(g) Using a timing light, connect the tester to check wire.

CHECK:

Check ignition timing.

OK:

Ignition timing: 10° BTDC at idle

NG → **Proceed to page IG–1 and continue to troubleshoot.**

OK

Proceed to problem symptoms table on page DI–221.

7	**Check fuel pressure.**

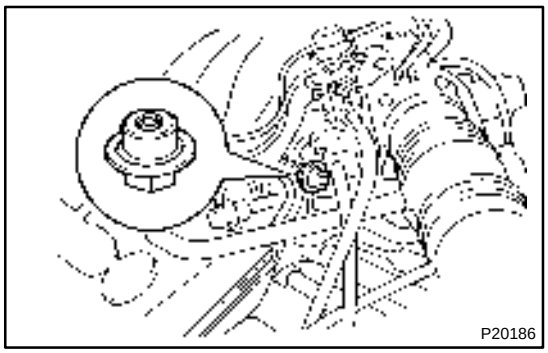

PREPARATION:

(a) Be sure that enough fuel is in the tank.
(b) Connect the TOYOTA hand–held tester to the DLC3.
(c) Turn the ignition switch ON and push the TOYOTA hand–held tester main switch ON.
(d) Use ACTIVE TEST mode to operate the fuel pump.
(e) If you have no TOYOTA hand–held tester, connect the positive (+) and negative (–) leads from the battery to the fuel pump connector (See page SF–6).

CHECK:

Check that the pulsation damper screw rises up when the fuel pump operates.

NG → **Proceed to page SF–6 and continue to troubleshoot.**

OK

8	Check for spark.

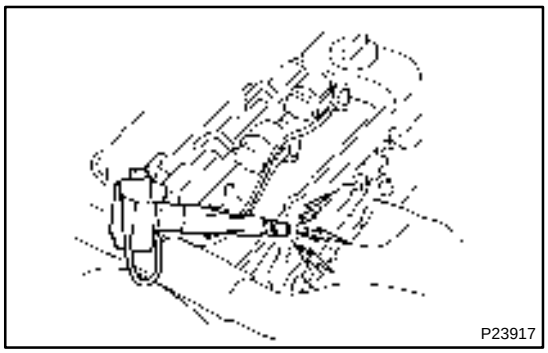

PREPARATION:

(a) Remove the ignition coil or disconnect the high–tension cord from the spark plug.
(b) Remove the spark plug.
(c) Install the spark plug to the ignition coil or high–tension cord.
(d) Disconnect the injector connector.
(e) Hold the end about 12.5 mm (0.5 in.) from the ground.

CHECK:

Check if spark occurs while engine is being cranked.

NOTICE:

To prevent excess fuel being injected from the injectors during this test, don't crank the engine for more than 5 ~ 10 seconds at a time.

OK:

Spark jumps across electrode gap.

NG → **Proceed to page IG–1 and continue to troubleshoot.**

OK →

Proceed to problem symptoms table on page DI–221.

7. ENGINE OPERATING CONDITION

NOTICE:

The values given below for "Normal Condition" are representative values, so a vehicle may still be normal even if its value varies from those listed here. So do not decide whether a part is faulty or not solely according to the "Normal Condition" here.

(a) CARB mandated signals.

TOYOTA hand–held tester display	Measurement Item	Normal Condition*
FUEL SYS #1	Fuel System Bank 1 OPEN: Air–fuel ratio feedback stopped CLOSED: Air–fuel ratio feedback operating	Idling after warming up: CLOSED
FUEL SYS #2	Fuel System Bank 2 OPEN: Air–fuel ratio feedback stopped CLOSED: Air–fuel ratio feedback operating	Idling after warming up: CLOSED
CALC LOAD	Calculator Load: Current intake air volume as a proportion of max. intake air volume	Idling: 13.1 ~ 18.7% Racing without load (2,500rpm): 11.7 ~ 17.3%
COOLANT TEMP.	Engine Coolant Temp. Sensor Value	After warming up: 80 ~ 95°C (176 ~ 203°F)
SHORT FT #1	Short–term Fuel Trim Bank 1	0 ± 20%
LONG FT #1	Long–term Fuel Trim Bank 1	0 ± 20%
SHORT FT #2	Short–term Fuel Trim Bank 2	0 ± 20%
LONG FT #2	Long–term Fuel Trim Bank 2	0 ± 20%
ENGINE SPD	Engine Speed	Idling: 650 ~ 750 rpm
VEHICLE SPD	Vehicle Speed	Vehicle stopped: 0 km/h (0 mph)
IGN ADVANCE	Ignition Advance: Ignition Timing of Cylinder No. 1	Idling: BTDC 10 ~ 25.0°
INTAKE AIR	Intake Air Temp. Sensor Value	Equivalent to Ambient Temp.
MAF	Air Flow Rate Through Mass Air Flow Meter	Idling: 3.3 ~ 4.7 gm/sec. Racing without load (2,500 rpm): 10.4 ~ 15.4 gm/sec.
THROTTLE POS	Voltage Output of Throttle Position Sensor Calculated as a percentage: 0 V → 0%, 5 V → 100%	Throttle valve fully closed: 7 ~ 11% Throttle valve fully open: 65 ~ 75%

*: If no conditions are specifically stated for "Idling", it means the shift lever is at N or P position, the A/C switch is OFF and all accessory switches are OFF.

TOYOTA hand–held tester display	Measurement Item	Normal Condition*1
O2S B1, S1	Voltage Output of Oxygen Sensor Bank 1 Sensor 1	Idling: 0.1 ~ 0.9 V (0.56 ~ 0.76 V*2)
O2FT B1, S1	Oxygen Sensor Fuel Trim Bank 1 Sensor 1 (Same as SHORT FT #1)	0 ± 20%
O2S B1, S2	Voltage Output of Oxygen Sensor Bank 1 Sensor 2	Driving 50 km/h (31 mph): 0.1 ~ 0.9 V
O2S B2, S1	Voltage Output of Oxygen Sensor Bank 2 Sensor 1	Idling: 0.1 ~ 0.9 V (0.56 ~ 0.76 V*2)
O2FT B2, S1	Oxygen Sensor Fuel Trim Bank 2 Sensor 1 (Same as SHORT FT #2)	0 ± 20%
A/FS B1, S1 *3	Voltage Output of A/F Sensor Bank 1 Sensor 1	Idling: 2.8 ~ 3.8 V
A/FS B2, S1 *3	Voltage Output of A/F Sensor Bank 2 Sensor 1	Idling: 2.8 ~ 3.8 V
A/FFT B1, S1 *3	A/F Sensor Fuel Trim Bank 1 Sensor 1 (Same as SHORT FT #1)	O ± 20%
A/FFT B2, S1 *3	A/F Sensor Fuel Trim Bank 2 Sensor 1 (Same as SHORT FT #1)	O ± 20%

*1: If no conditions are specifically stated for ”Idling”, it means the shift lever is shift lever is at N or P position, the A/C switch is OFF and all accessory switches are OFF.
*2: Only for California Specification vehicles, when you use the OBD II scan tool (excluding TOYOTA hand–held tester).
*3: Only for California Specification vehicles, when you use the TOYOTA hand–held tester.

(b) TOYOTA Enhanced Signals.

TOYOTA hand–held tester display	Measurement Item	Normal Condition*
MISFIRE RPM	Engine RPM for first misfire range	Misfire 0: 0 rpm
MISFIRE LOAD	Engine load for first misfire range	Misfire 0: 0 g/r
INJECTOR	Fuel injection time for cylinder No.1	Idling: 1.6 ~ 2.9 ms
IAC DUTY RATIO	Intake Air Control Valve Duty Ratio Opening ratio rotary solenoid type IAC valve	Idling: 27 ~ 47 %
STARTER SIG	Starter Signal	Cranking: ON
CTP SIG	Closed Throttle Position Signal	Throttle Fully Closed: ON
A/C SIG	A/C Switch Signal	A/C ON: ON
PNP SW	Park/Neutral Position Switch Signal	P or N position: ON
ELCTRCL LOAD SIG	Electrical Load Signal	Defogger switch ON: ON
STOP LIGHT SW	Stop Light Switch Signal	Stop light switch ON: ON
PS OIL PRESS SW	Power Steering Oil Pressure Switch Signal	Turn steering wheel: ON
FC IDL	Fuel Cut Idle: Fuel cut when throttle valve fully closed, during deceleration	Fuel cut operating: ON
FC TAU	Fuel Cut TAU: Fuel cut during very light load	Fuel cut operating: ON
CYL#1 ~ CYL#6	Abnormal revolution variation for each cylinder	0%
IGNITION	Total number of ignition for every 1,000 revolutions	0 ~ 3,000
EGRT GAS	EGR Gas Temperature Sensor Value	EGR not operating: Temperature between intake air temp. and engine coolant temp.
INTAKE CTRL VSV	Intake Air Control Valve VSV Signal	VSV operating: ON
EGR SYSTEM	EGR system operating condition	Idling: OFF
A/C CUT SIG	A/C Cut Signal	A/C S/W OFF: ON
FUEL PUMP	Fuel Pump Signal	Idling: ON
EVAP (PURGE) VSV	EVAP VSV Signal	VSV operating: Above 30%
VAPOR PRESS VSV	Vapor Pressure VSV Signal	VSV operating: ON (TANK)

*: If no conditions are specifically stated for ”Idling”, it means the shift lever is at N or P position, the A/C switch is OFF and all accessory switches are OFF.

TOYOTA hand–held tester display	Measurement Item	Normal Condition*1
TOTAL FT B1	Total Fuel Trim Bank 1: Average value for fuel trim system of bank 1	Idling: 0.8 ~ 1.2
TOTAL FT B2	Total Fuel Trim Bank 1: Average value for fuel trim system of bank 2	Idling: 0.8 ~ 1.2
O2 LR B1, S1 *2	Oxygen Sensor Lean Rich Bank 2 Sensor 1 Response time for oxygen sensor output to switch from lean to rich	Idling after warmed up: 0 ~ 1,000 msec.
O2 LR B2, S1 *2	Oxygen Sensor Lean Rich Bank 2 Sensor 1 Response time for oxygen sensor output to switch from lean to rich	Idling after warmed up: 0 ~ 1,000 msec.
O2 RL B1, S1 *2	Oxygen Sensor Rich Lean Bank 1 Sensor 1 Response time for oxygen sensor output to switch from rich to lean	Idling after warmed up: 0 ~ 1,000 msec.
O2 RL B2, S1 *2	Oxygen Sensor Rich Lean Bank 2 Sensor 1 Response time for oxygen sensor output to switch from rich to lean	Idling after warmed up: 0 ~ 1,000 msec.

*1: If no conditions are specifically stated for ”Idling”, it means the shift lever is at N or P position, the A/C switch is OFF and all accessory switches are OFF.
*2: Except California Specification vehicles.

DI07B–07

DIAGNOSTIC TROUBLE CODE CHART

1. SAE CONTROLLED

HINT:

Parameters listed in the chart may not be exactly the same as your reading due to the type of instrument or other factors.

If a malfunction code is displayed during the DTC check in check mode, check the circuit for that code listed in the table below. For details of each code, turn to the page referred to under the "See page " for the respective "DTC No." in the DTC chart.

DTC No. (See Page)	Detection Item	Trouble Area	MIL*1	Memory
P0100 (DI–222)	Mass Air Flow Circuit Malfunction	□Open or short in mass air flow meter circuit □Mass air flow meter □ECM	○	○
P0101 (DI–227)	Mass Air Flow Circuit Range/Performance Problem	□Mass air flow meter	○	○
P0110 (DI–228)	Intake Air Temp. Circuit Malfunction	□Open or short in intake air temp. sensor circuit □Intake air temp. sensor (built into mass air flow meter) □ECM	○	○
P0115 (DI–233)	Engine Coolant Temp. Circuit Malfunction	□Open or short in engine coolant temp. sensor circuit □Engine coolant temp. sensor □ECM	○	○
P0116 (DI–237)	Engine Coolant Temp. Circuit Range/Performance Problem	□Engine coolant temp. sensor □Cooling system	○	○
P0120 (DI–239)	Throttle/Pedal Position Sensor/Switch "A" Circuit Malfunction	□Open or short in throttle position sensor circuit □Throttle position sensor □ECM	○	○
P0121 (DI–243)	Throttle/Pedal Position Sensor/Switch "A" Circuit Range/Performance Problem	□Throttle position sensor	○	○
*2 P0125 (DI–244)	Insufficient Coolant Temp. for Closed Loop Fuel Control (Except California Spec.)	□Fuel system □Injector □Ignition system □Gas leakage on exhaust system □Open or short in heated oxygen sensor circuit (bank 1, 2 sensor 1) □Heated oxygen sensor (bank 1, 2 sensor 1) □ECM	○	○
*3 P0125 (DI–249)	Insufficient Coolant Temp. for Closed Loop Fuel Control (Only for California Spec.)	□Fuel system □Injector □Ignition system □Gas leakage on exhaust system □Open or short in A/F sensor circuit (bank 1, 2 sensor 1) □A/F sensor (bank 1, 2 sensor 1) □ECM	○	○
*2 P0130 (DI–255)	Heated Oxygen Sensor Circuit Malfunction (Bank 1 Sensor 1)	□Heated oxygen sensor □Fuel trim malfunction	○	○

*1: ○ ~~~MIL lights up

*2: Except California specification vehicles

*3: Only for California specification vehicle

DTC No. (See Page)	Detection Item	Trouble Area	MIL	Memory
*2 P0133 (DI–259)	Heated Oxygen Sensor Circuit Slow Response (Bank 1 Sensor 1)	□Heated oxygen sensor □Fuel trim malfunction	○	○
*2 P0135 (DI–263)	Heated Oxygen Sensor Heater Circuit Malfunction (Bank 1 Sensor 1)	□Open or short in heater circuit of heated oxygen sensor □Heated oxygen sensor heater □ECM	○	○
P0136 (DI–265)	Heated Oxygen Sensor Circuit Malfunction (Bank 1 Sensor 2)	□Heated oxygen sensor	○	○
P0141 (DI–263)	Heated Oxygen Sensor Heater Circuit Malfunction (Bank 1 Sensor 2)	□Same as DTC No. P0135	○*1	○
*3 P0150 (DI–255)	Heated Oxygen Sensor Circuit Malfunction (Bank 2 Sensor 1)	□Same as DTC No. P0130	○*1	○
*3 P0153 (DI–259)	Heated Oxygen Sensor Circuit Slow Response (Bank 2 Sensor 1)	□Same as DTC No. P0133 □Fuel trim malfunction	○*1	○
*3 P0155 (DI–263)	Heated Oxygen Sensor Circuit Malfunction (Bank 2 Sensor 1)	□Same as DTC No. P0135	○*1	○
*3 P0171 (DI–272)	System too Lean (Fuel Trim) (Except California Spec.)	□Air intake (hose loose) □Fuel line pressure □Injector blockage □Heated oxygen sensor (bank 1, 2 sensor 1) malfunction □Mass air flow meter □Engine coolant temp. sensor □Gas leakage on exhaust system	○*1	○
*3 P0172 (DI–272)	System too Rich (Fuel Trim) (Except California Spec.)	□Fuel line pressure □Injector leak, blockage □Heated oxygen sensor (bank 1, 2 sensor 1) malfunction □Mass air flow meter □Engine coolant temp. sensor □Gas leakage on exhaust system	○*1	○
*4 P0171 (DI–267)	System too Lean (Fuel Trim) (Only for California Spec.)	□Air intake (hose loose) □Fuel line pressure □Injector blockage □Mass air flow meter □Engine coolant temp. sensor □A/F sensor (bank 1, 2 sensor 1) □Gas leakage on exhaust system	○*1	○
*4 P0172 (DI–267)	System too rich (Fuel Trim) (Only for California Spec.)	□Fuel line pressure □Injector leak, blockage □Heated oxygen sensor malfunction □Mass air flow meter □Engine coolant temp. sensor □A/F sensor (bank 1, 2 sensor 1) □Gas leakage on exhaust system	○*1	○

*1: MIL lights up
*2: MIL light up or blinking
*3: Except California specification vehicles
*4: Only for California specification vehicle

DTC No. (See Page)	Detection Item	Trouble Area	MIL	Memory
P0300 (DI–276)	Random/Multiple Cylinder Misfire Detected	□Ignition system □Injector □Fuel line pressure □EGR □Compression pressure □Valve clearance not to specification □Valve timing □Mass air flow meter □Engine coolant temp. sensor □Open or short engine wire □Connector connection □ECM	○*2	○
P0301 P0302 P0303 P0304 P0305 P0306 (DI–276)	Misfire Detected – Cylinder 1 – Cylinder 2 – Cylinder 3 – Cylinder 4 – Cylinder 5 – Cylinder 6			
P0325 (DI–283)	Knock Sensor 1 Circuit Malfunction	□Open or short in knock sensor 1 circuit □Knock sensor 1 (looseness) □ECM	○*1	○
P0330 (DI–283)	Knock Sensor 2 Circuit Malfunction	□Open or short in knock sensor 2 circuit □Knock sensor 2 (looseness) □ECM	○*1	○
P0335 (DI–287)	Crankshaft Position Sensor ”A” Circuit Malfunction	□Open or short in crankshaft position sensor circuit □Crankshaft position sensor □Starter □ECM	○*1	○
P0340 (DI–290)	Camshaft Position Sensor Circuit Malfunction	□Open or short in camshaft position sensor circuit □Camshaft position sensor □Starter □ECM	○*1	○
P0401 (DI–292)	Exhaust Gas Recirculation Flow Insufficient Detected	□EGR valve (stuck closed) □Open or short in EGR gas temp. sensor circuit □EGR gas temp. sensor □Open in VSV circuit for EGR □VSV for EGR □Vacuum control valve □Vacuum hose disconnected or blocked □ECM	○*1	○
P0402 (DI–302)	Exhaust Gas Recirculation Flow Excessive Detected	□EGR valve stuck open □VSV for EGR open malfunction □Short in VSV circuit for EGR □Open or short in EGR valve position sensor circuit □EGR valve position sensor □ECM	○*1	○
*3 P0420 (DI–305)	Catalyst System Efficiency Below Threshold (Except California Spec.)	□Three–way catalytic converter □Open or short in heated oxygen sensor circuit □Heated oxygen sensor	○*2	○
*4 P0420 (DI–308)	Catalyst System Efficiency Below Threshold (Only for California Spec.)	□Three–way catalytic converter □Open or short in heated oxygen sensor (bank 1, sensor 2) circuit □Heated oxygen sensor (bank 1, sensor 2) □Open or short in A/F sensor (bank 1, 2 sensor 1) circuit □A/F sensor (bank 1, 2 sensor 1)	○*2	○

*1: MIL lights up
*2: MIL lights up on U.S.A and Canadian specification vehicles
*3: Except California specification vehicles
*4: Only for California specification vehicle

DTC No. (See Page)	Detection Item	Trouble Area	MIL*	Memory
P0440 (DI–311)	Evaporative Emission Control System Malfunction	□Vapor pressure sensor □Fuel tank cap incorrectly installed □Fuel tank cap cracked or damaged □Vacuum hose cracked, holed, blocked, damaged or disconnected ((1) or (2) in fig. 1) □Hose or tube cracked, holed, damaged or loose seal ((3) in fig. 1) □Fuel tank cracked, holed or damaged □Charcoal canister cracked, holed or damaged □Fuel tank over fill check valve cracked or damaged	○*1	○
P0441 (DI–318)	Evaporative Emission Control System Incorrect Purge Flow	□Open or short in VSV circuit for EVAP □Open or short in VSV circuit for vapor pressure sensor □Open or short in vapor pressure sensor circuit □VSV for EVAP □VSV for vapor pressure sensor □Vapor pressure sensor □Vacuum hose cracks, holed blocked, damaged or disconnected ((1), (4), (5), (6) and (7) in fig.1) □Charcoal canister cracks, holed or damaged □Fuel tank over fill check valve cracked or damaged	○	○
P0446 (DI–318)	Evaporative Emission Control System Vent Control Malfunction	□Open or short in VSV circuit for EVAP □Open or short in VSV circuit for vapor pressure sensor □Open or short in vapor pressure sensor circuit □VSV for EVAP □VSV for vapor pressure sensor □Vapor pressure sensor □Vacuum hose cracks, holed blocked, damaged or disconnected ((1), (4), (5), (6) and (7) in fig.1) □Charcoal canister cracks, holed or damaged □Fuel tank over fill check valve cracked or damaged	○	○
P0450 (DI–331)	Evaporative Emission Control System Pressure Sensor Malfunction	□Open or short in vapor pressure sensor circuit □Vapor pressure sensor □ECM	○	○
P0451 (DI–331)	Evaporative Emission Control System Pressure Sensor Range/Performance	□Open or short in vapor pressure sensor circuit □Vapor pressure sensor □ECM	○	○
P0500 (DI–333)	Vehicle Speed Sensor Malfunction	□Open or short in speed sensor circuit □Vehicle speed sensor □Combination meter □ECM	○	○
P0505 (DI–336)	Idle Control System Malfunction	□IAC valve is stuck or closed □Open or short in IAC valve circuit □Open or short in A/C signal circuit □Air intake (hose loose)	○	○

*: ○ ~~~MIL lights up

2. MANUFACTURER CONTROLLED

DTC No. (See Page)	Detection Item	Trouble Area	MIL*1	Memory
*2 P1130 (DI–340)	A/F Sensor Circuit Range/Performance Malfunction (Bank 1 Sensor 1)	□Open or short in A/F sensor circuit □A/F sensor (bank 1 sensor 2) □ECM	○	○
*2 P1133 (DI–345)	A/F Sensor Circuit Response Malfunction (Bank 1 Sensor 1)	□A/F sensor (bank 1 sensor 2)	○	○
*2 P1135 (DI–349)	A/F Sensor Heater Circuit Malfunction (Bank1 Sensor 1)	□Open or short in A/F sensor (bank 1 sensor 2) □A/F sensor (bank 1 sensor 2) heater □ECM	○	○
*2 P1150 (DI–340)	A/F Sensor Circuit Range/Performance Malfunction (Bank2 Sensor 1)	□Same as DTC No. P1130	○	○
*2 P1153 (DI–345)	A/F Sensor Circuit Response Malfunction (Bank 2 Sensor 1)	□Same as DTC No. P1133	○	○
*2 P1155 (DI–349)	A/F Sensor Heater Circuit Malfunction (Bank 2 Sensor 1)	□Same as DTC No. P1135	○	○
P1300 (DI–351)	Igniter Circuit Malfunction	□Open or short in IGF or IGT circuit from igniter to ECM □Igniter □ECM	○	○
P1335 (DI–357)	Crankshaft Position Sensor Circuit Malfunction (during engine running)	□Open or short in crankshaft position sensor circuit □Crankshaft position sensor □Starter □ECM	–	○
P1410 (DI–358)	EGR Valve Position Sensor Circuit Malfunction	□Open or short in EGR valve position sensor circuit □EGR valve position sensor □ECM	○	○
P1411 (DI–362)	EGR Valve Position Sensor Circuit Range/Performance Problem	□EGR valve position sensor	○	○
P1520 (DI–363)	Stop Light Switch Signal Malfunction	□Short in stop light switch signal circuit □Stop light switch □ECM	○	○
P1600 (DI–366)	ECM BATT Malfunction	□Open in back up power source circuit □ECM	○	○
P1780 (DI–368)	Park/Neutral Position Switch Malfunction	□Short in park/neutral position switch circuit □Park/neutral position switch □ECM	○	○

*1: ○ ~~~MIL lights up, – ~~~MIL does not light up

*2: Only for California specification vehicles

DTC No. (See Page)	Detection Item	Trouble Area	MIL*	Memory
B2795 (DI–928)	Unmatched key Code	□Immobiliser system	–	○
B2796 (DI–929)	No Communication in Immobiliser System	□Immobiliser system	–	○
B2797 (DI–932)	Communication Malfunction No.1	□Immobiliser system	–	○
B2798 (DI–935)	Communication Malfunction No.2	□Immobiliser system	–	○

*:– ~~~MIL does not light up

DI07C–06

PARTS LOCATION

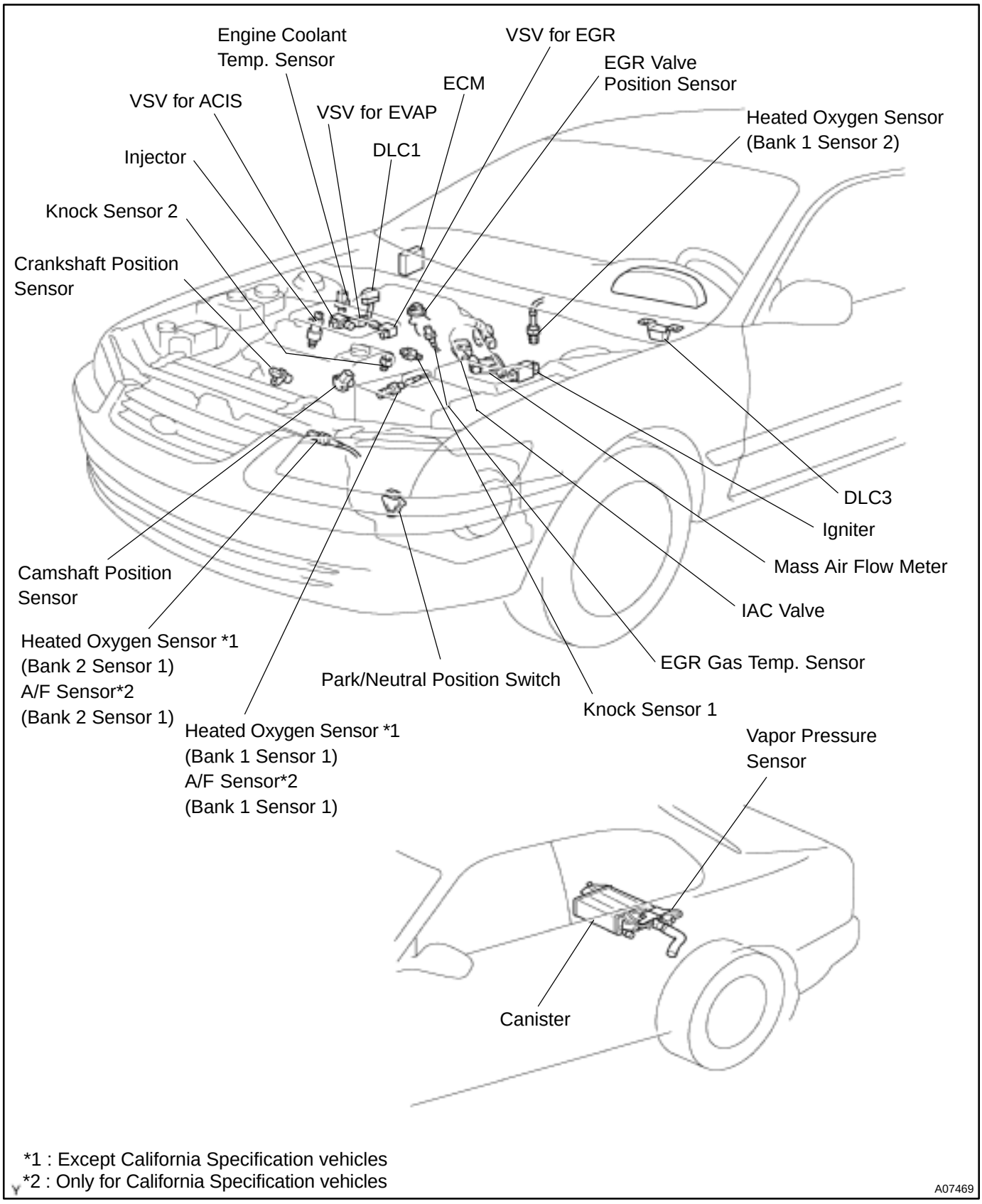

*1 : Except California Specification vehicles
*2 : Only for California Specification vehicles

A07469

DI4DP–01

TERMINALS OF ECM

ECM Terminals

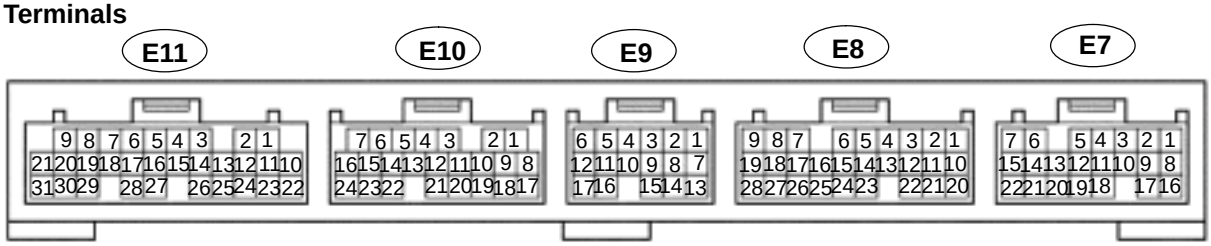

A02508

Symbols (Terminals No.)	Wiring Color	Condition	STD Voltage (V)
BATT (E7 – 1) – E1 (E10 – 17)	B–Y ↔ BR	Always	9 ~ 14
+B (E7 – 16) – E1 (E10 – 17)	R ↔ BR	IG switch ON	9 ~ 14
VC (E10 – 2) – E2 (E10 – 18)	Y ↔ BR	IG switch ON	4.5 ~ 5.5
VTA1 (E10 – 23) – E2 (E10 – 18)	L ↔ BR	IG switch ON Throttle valve fully closed	0.3 ~ 1.0
		IG switch ON Throttle valve fully open	3.2 ~ 4.9
VG (E10 – 10) – E2G (E10 – 19)	P ↔ R–B	Idling , A/C switch OFF	1.1 ~ 1.5
THA (E10 – 22) – E2 (E10 – 18)	L–Y ↔ BR	Idling, Intake air temp. 20˚C (68˚F)	0.5 ~ 3.4
THW (E10 –14) – E2 (E10 – 18)	G–B ↔ BR	Idling, Engine coolant temp. 80˚C (176˚F)	0.2 ~ 1.0
STA (E7 – 7) – E1 (E10 – 17)	GR ↔ BR	Cranking	6.0 or more
#10 (E10 – 5) – E01 (E11 – 21)	L ↔ BR	IG switch ON	9 ~ 14
		Idling	Pulse generation (See page DI–276)
#20 (E10 – 6) – E01 (E11 – 21)	R ↔ BR	IG switch ON	9 ~ 14
		Idling	Pulse generation (See page DI–276)
#30 (E11 – 1) – E01 (E11 – 21)	Y ↔ BR	IG switch ON	9 ~ 14
		Idling	Pulse generation (See page DI–276)
#40 (E11 – 2) – E01 (E11 – 21)	W ↔ BR	IG switch ON	9 ~ 14
		Idling	Pulse generation (See page DI–276)
#50 (E11 – 3) – E01 (E11 – 21)	R–L ↔ BR	IG switch ON	9 ~ 14
		Idling	Pulse generation (See page DI–276)
#60 (E11 – 4) – E01 (E11 – 21)	G ↔ BR	IG switch ON	9 ~ 14
		Idling	Pulse generation (See page DI–276)
IGT1 (E11 – 11) – E1 (E10– 17)	GR ↔ BR	Idling	Pulse generation (See page DI–351)
IGT2 (E11 – 12) – E1 (E10 – 17)	BR–Y ↔ BR	Idling	Pulse generation (See page DI–351)
IGT3 (E11 – 13) – E1 (E10 – 17)	LG–B ↔ BR	Idling	Pulse generation (See page DI–351)

Symbols (Terminals No.)	Wiring Color	Condition	STD Voltage (V)
IGF (E11 – 25) – E1 (E10 – 17)	W–R ↔ BR	IG switch ON	4.5 ~ 5.5
		Idling	Pulse generation (See page DI–351)
THG (E10 – 13) – E2 (E10 – 18)	G–Y ↔ BR	IG switch ON	4.5 ~ 5.5
G22+ (E11 – 10) – NE– (E10 – 24)	B–W ↔ L	Idling	Pulse generation (See page DI–287)
NE+ (E10 – 16) – NE– (E10 – 24)	B–R ↔ L	Idling	Pulse generation (See page DI–287)
ELS (E7 – 19) – E1 (E10 – 17)	G–O ↔ BR	Taillight switch ON	7.5 ~ 14
		Taillight switch OFF	0 ~ 1.5
ELS2 (E7 – 18) – E1 (E10 – 17)	B–Y ↔ BR	Defogger switch ON	7.5 ~ 14
		Defogger switch OFF	0 ~ 1.5
EGR (E11 – 18) – E01 (E11 –21)	Y–G ↔ BR	IG switch ON	9 ~ 14
ACIS (E11 – 17) – E01 (E11 – 21)	R–Y ↔ BR	IG switch ON	9 ~ 14
FC (E7 – 3) – E01 (E11 – 21)	G–R ↔ BR	IG switch ON	9 ~ 14
		Idling	0 ~ 3.0
EVP1 (E10 – 7) – E01 (E11 – 21)	LG ↔ BR	IG switch ON	9 ~ 14
RSC (E11 – 15) – E01 (E11 – 21)	Y–B ↔ BR	IG switch ON Disconnect E11 of ECM connector	9 ~ 14
RSO (E11 – 16) – E01 (E11 – 21)	R–W ↔ BR	IG switch ON Disconnect E11 of ECM connector	9 ~ 14
*OXR1 (E10 – 11) – E1 (E10 – 17)	W ↔ BR	Maintain engine speed at 2,500 rpm for 2 min. after warming up	Pulse generation (See page DI–305)
*OXL1 (E10 – 12) – E1 (E10 – 17)	B ↔ BR	Maintain engine speed at 2,500 rpm for 2 min. after warming up	Pulse generation (See page DI–305)
OXS (E8 – 8) – E1 (E10 – 17)	B ↔ BR	Maintain engine speed at 2,500 rpm for 2 min. after warming up	Pulse generation (See page DI–305)
*HTL (E10– 4) – E03 (E11 – 30)	Y–R ↔ BR	Idling	9 ~ 14
		IG switch ON	Below 3.0
*HTR (E10 – 3) – E03 (E11 – 30)	L–B ↔ BR	Idling	9 ~ 14
		IG switch ON	Below 3.0
HTS (E8 – 9) – E03 (E11 –30)	P–G ↔ BR	Idling	9 ~ 14
		IG switch ON	Below 3.0
KNKR (E11 – 27) – E1 (E10 – 17)	W ↔ BR	Idling	Pulse generation (See page DI–283)
KNKL (E11 – 28)– E1 (E10 – 17)	W ↔ BR	Idling	Pulse generation (See page DI–283)
NSW (E7 – 20) – E1 (E10 – 17)	B–W ↔ BR	IG switch ON Other shift position in ”P” ,”N” position	9 ~ 14
		IG switch ON Shift position in ”P” ,”N” position	0 ~ 3.0
SPD (E8 – 22) – E1 (E10 – 17)	V–W ↔ BR	IG switch ON Rotate driving wheel slowly	Pulse generation

*: Only for except California specification vehicles

Symbols (Terminals No.)	Wiring Color	Condition	STD Voltage (V)
TC (E11 – 6) – E1 (E10 – 17)	L–W ↔ BR	IG switch ON	9 ~ 14
W (E7 – 6) – E01 (E11 – 21)	G–R ↔ BR	IG switch ON	Below 3.0
PS (E10 – 9) – E1 (E10 – 17)	B–L ↔ BR	IG switch ON	9 ~ 14
ACT (E8 – 13) – E1 (E10 – 17)	LG–B ↔ BR	A/C switch OFF	Below 2.0
		A/C switch ON at idling	9 ~ 14
A/C (E8 – 25) – E1 (E10 – 17)	B–Y ↔ BR	A/C switch ON at idling	Below 2.0
		A/C switch OFF	9 ~ 14
CF (E11 – 29) – E1 (E10 – 17)	G–W ↔ BR	Electric cooling fan is operating on high speed	9 ~ 14
		Electric cooling fan is operating on low speed or OFF	0 ~ 2
TACH (E8– 27) – E1 (E10 – 17)	B–O ↔ BR	Idling	Pulse generation
TPC (E7 – 9) – E01 (E11 – 21)	W–R ↔ BR	IG switch ON Disconnect the vacuum hose from the vapor pressure sensor	9 ~ 14
PTNK (E7 – 17) – E1 (E10 – 17)	L–R ↔ BR	IG switch ON	3.0 ~ 3.6
		IG switch ON Apply vacuum 2.0 kPa (15 mmHg, 0.6 in.Hg)	1.3 ~ 2.1
SIL (E7 – 11) – E1 (E10 – 17)	W ↔ BR	During transmission	Pulse generation
STP (E7 – 15) – E1 (E10 – 17)	G–W ↔ BR	IG switch ON Brake pedal depressed	7.5 ~ 14
		IG switch ON Brake pedal released	Below 1.5
EGLS (E11 – 22) – E1 (E10 – 17)	W–G ↔ BR	IG switch ON Apply vacuum (0 kPa, 0 mmHg, 0 in.Hg) to EGR valve	0.4 ~ 1.6
		IG switch ON Apply vacuum (17.3 kPa, 130 mmHg, 5.12 in.Hg) to EGR valve	3.2 ~ 5.1
*1 AFR+ (E10 – 11 – E1 (E10 – 17)	BR ↔ BR	IG switch ON	3.3*
*1 AFR– (E10 – 20) – E1 (E10 – 17)	B–R ↔ BR	IG switch ON	3.0*
*1 AFL+ (E10 – 12) – E1 (E10 – 17)	B–W ↔ BR	IG switch ON	3.3*
*1 AFL– (E10 – 21) – E1 (E10 – 17)	L ↔ BR	IG switch ON	3.0*
*1 HAFR (E10 – 3) – E04 (E10 – 1)	B–R ↔ BR	IG switch ON	Below 3.0
		Idling (warm up the engine)	Pulse generation
*1 HAFL (E10 – 4) – E05 (E10 – 8)	B–W ↔ BR	IG switch ON	Below 3.0
		Idling (warm up the engine)	Pulse generation
KSW (E8 – 11) – E1 (E10 – 17)	L–B ↔ BR	At time of inserting the key	Below 1.5
		In condition without the key inserted	4 ~ 5
RXCK (E9 – 5) – E1 (E10 – 17)	R–L ↔ BR	At time of inserting the key	Pulse generation
CODE (E9 – 4) – E1 (E10 – 17)	G–W ↔ BR	At time of inserting the key	Pulse generation
IGSW (E7 – 2) – E1 (E10 – 17)	B–R ↔ BR	IG switch ON	9 ~ 14
TXCT (E9– 10) – E1 (E10 – 17)	L–Y ↔ BR	At time of inserting the key	Pulse
IMLD (E9 – 16) – E1 (E10 – 17)	R–Y ↔ BR	In condition without the key inserted	Pulse
MREL (E7 – 8) – E1 (E10 – 17)	B–R ↔ BR	IG switch ON	9 ~ 14

*: The ECM terminal voltage is fixed regardless of the output voltage from the sensor.
*1: Only for California specification vehicles

DI07E–06

PROBLEM SYMPTOMS TABLE

Symptom	Suspect Area	See page
Engine does not crank (Does not start)	1. Starter 2. Starter relay	ST–18 ST–20
No initial combustion (Does not start)	1. ECM power source circuit 2. Fuel pump control circuit 3. Engine control module (ECM)	DI–369 DI–374 IN–31
No complete combustion (Does not start)	1. Fuel pump control circuit	DI–374
Engine cranks normally (Difficult to start)	1. Starter signal circuit 2. Fuel pump control circuit 3. Compression	DI–384 DI–374 EM–3
Cold engine (Difficult to start)	1. Starter signal circuit 2. Fuel pump control circuit	DI–384 DI–374
Hot engine (Difficult to start)	1. Starter signal circuit 2. Fuel pump control circuit	DI–384 DI–374
High engine idle speed (Poor idling)	1. A/C signal circuit (Compressor Circuit) 2. ECM power source circuit	AC–88 DI–369
Low engine idle speed (Poor idling)	1. A/C signal circuit (Compressor Circuit) 2. Fuel pump control circuit	AC–88 DI–374
Rough idling (Poor idling)	1. Compression 2. Fuel pump control circuit	EM–3 DI–374
Hunting (Poor idling)	1. ECM power source circuit 2. Fuel pump control circuit	DI–369 DI–374
Hesitation/Poor acceleration (Poor driveability)	1. Fuel pump control circuit 2. A/T faulty	DI–374 DI–453
Surging (Poor driveability)	1. Fuel pump control circuit	DI–374
Soon after starting (Engine stall)	1. Fuel pump control circuit	DI–374
During A/C operation (Engine stall)	1. A/C signal circuit (Compressor Circuit) 2. Engine control module (ECM)	AC–88 IN–31
Unable to refuel/Difficult to refuel	1. ORVR system	EC–6

DI07F–06

CIRCUIT INSPECTION

DTC	P0100	Mass Air Flow Circuit Malfunction

CIRCUIT DESCRIPTION

The mass air flow meter uses a platinum hot wire. The hot wire air flow meter consists of a platinum hot wire, thermistor and a control circuit installed in a plastic housing. The hot wire air flow meter works on the principle that the hot wire and thermistor located in the intake air bypass of the housing detect any changes in the intake air temperature.

The hot wire is maintained at the set temperature by controlling the current flow through the hot wire. This current flow is then measured as the output voltage of the mass air flow meter.

The circuit is constructed so that the platinum hot wire and thermistor provide a bridge circuit, with the power transistor controlled so that the potential of A and B remains equal to maintain the set temperature.

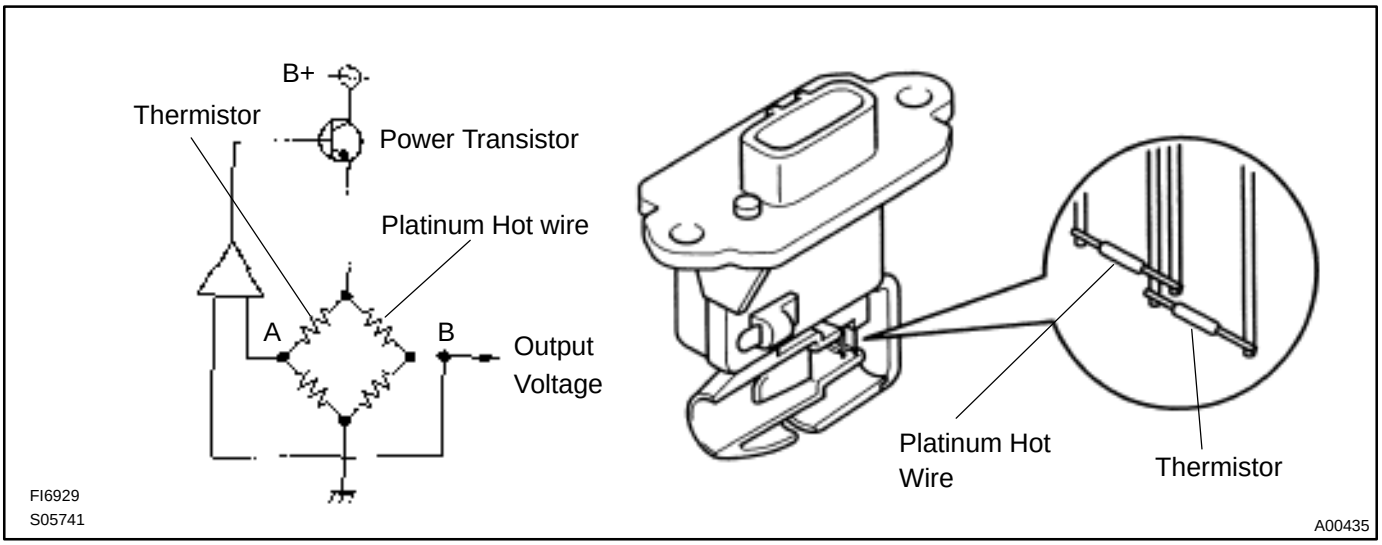

DTC No.	DTC Detecting Condition	Trouble Area
P0100	Open or short in mass air flow meter circuit with more than 3 sec. engine speed 4,000 rpm or less	●Open or short in mass air flow meter circuit ●Mass air flow meter ●ECM

If the ECM detects DTC 0100 it operates the fail–safe function, keeping the ignition timing and injection volume constant and making it possible to drive the vehicle.

HINT:

After confirming DTC P0100, use the OBD II scan tool or TOYOTA hand–held tester to confirm the mass air flow ratio from ”CURRENT DATA”.

Mass Air Flow Value (gm/sec.)	Malfunction
0.0	●Mass air flow meter power source circuit open ●VG circuit open or short
271.0 or more	●E2G circuit open

WIRING DIAGRAM

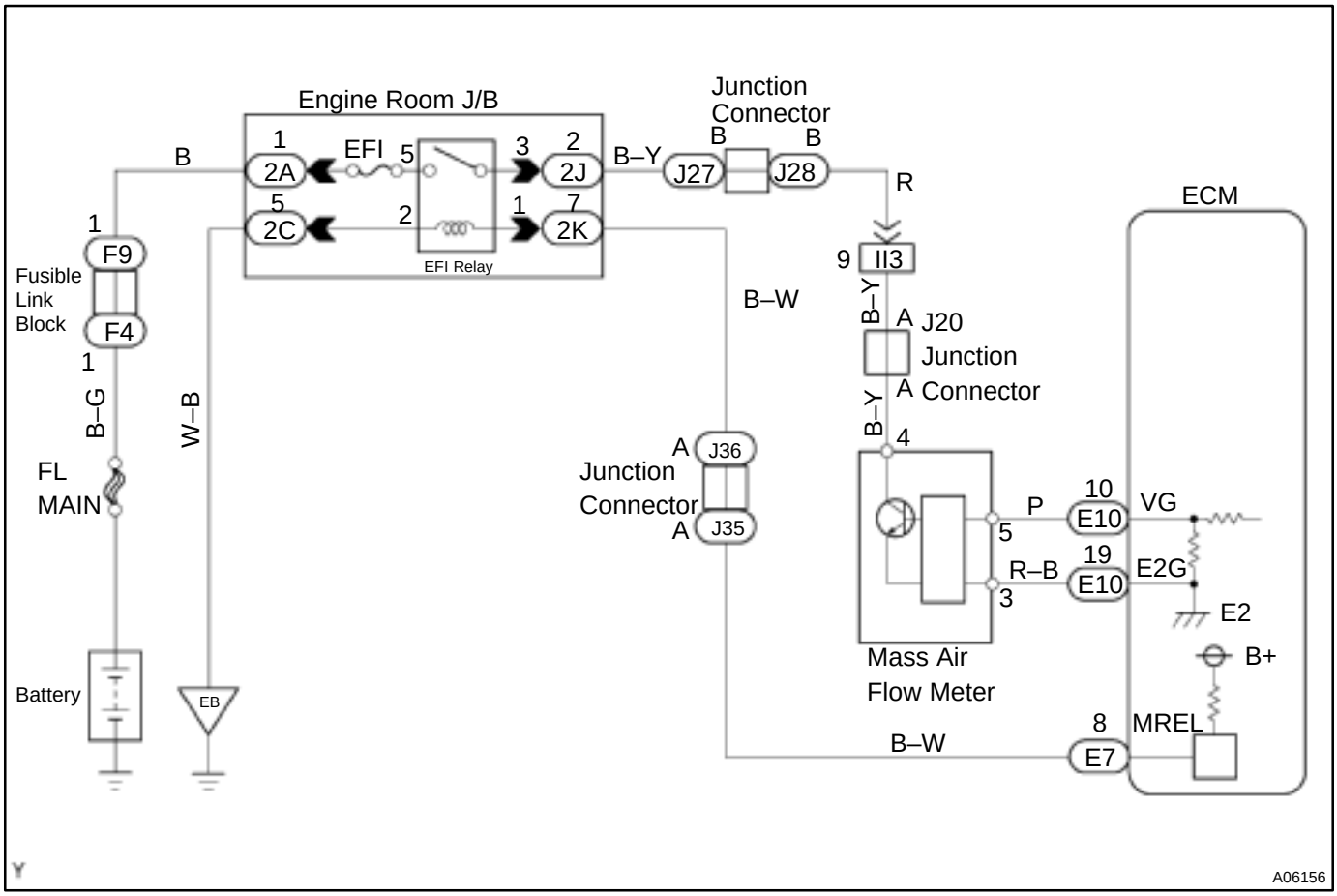

INSPECTION PROCEDURE

HINT:

Read freeze frame data using TOYOTA hand–held tester or OBD II scan tool. Because freeze frame records the engine conditions when the malfunction is detected, when troubleshooting it is useful for determining whether the vehicle was running or stopped, the engine warmed up or not, the air–fuel ratio lean or rich, etc. at the time of the malfunction.

1	**Connect OBD II scan tool or TOYOTA hand–held tester, and read value of mass air flow rate.**

PREPARATION:

(a) Connect the OBD II scan tool or TOYOTA hand–held tester to the DLC3.
(b) Turn the ignition switch ON and push the OBD II scan tool or TOYOTA hand–held tester main switch ON.
(c) Start the engine.

CHECK:

Read mass air flow rate on the OBD II scan tool or TOYOTA hand–held tester.

RESULT:

	Type I	Type II
Mass air flow rate (gm/sec.)	0.0	271.0 or more

Type I → **Go to step 2.**

Type II → **Go to step 5.**

2	**Check voltage of mass air flow meter power source.**

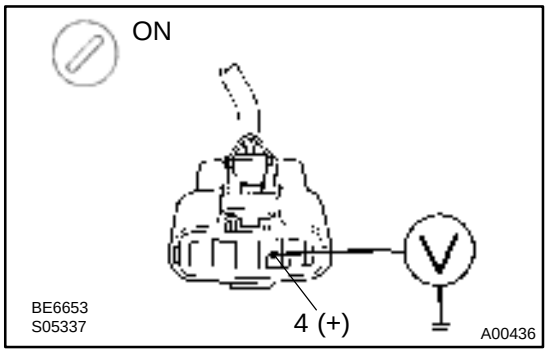

PREPARATION:

(a) Disconnect the mass air flow meter connector.
(b) Turn the ignition switch ON.

CHECK:

Measure voltage between terminal 4 of mass air flow meter connector and body ground.

OK:

Voltage: 9 ~ 14 V

NG → **Check for open in harness and connector between EFI main relay (Marking: EFI) and mass air flow meter (See page IN–31).**

OK

3	**Check voltage between terminal VG of ECM connector and body ground.**

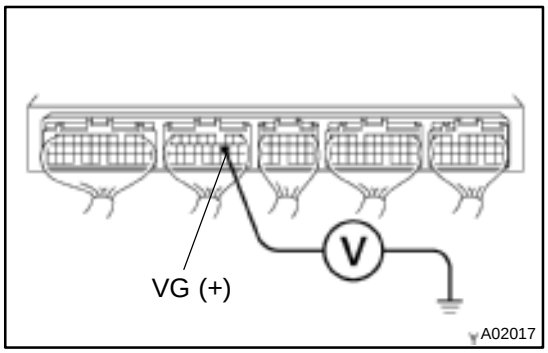

PREPARATION:

(a) Remove the glove compartment (See page SF–73).

(b) Start the engine.

CHECK:

Measure voltage between terminal VG of the ECM connector and body ground while engine is idling.

OK:

Voltage:

1.1 ~ 1.5 V (P or N position and A/C switch OFF)

OK → **Check and replace ECM (See page IN–31).**

NG

4	**Check for open and short in harness and connector between mass air flow meter and ECM (See page IN–31).**

NG → **Repair or replace harness or connector.**

OK

Replace mass air flow meter.

5	**Check continuity between terminal E2G of ECM and body ground.**

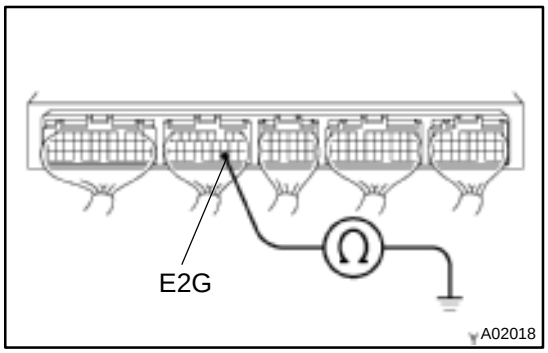

PREPARATION:
Remove the glove compartment (See page SF–73).
CHECK:
Check continuity between terminal E2G of the ECM connector and body ground.
OK:
Continuity (1 Ω or less)

NG → **Check and replace ECM (See page IN–31).**

OK

6	**Check for open in harness and connector between mass air flow meter and ECM (See page IN–31).**

NG → **Repair or replace harness or connector.**

OK

Replace mass air flow meter.

DI07G–06

DTC	P0101	Mass Air Flow Circuit Range/Performance Problem

CIRCUIT DESCRIPTION

Refer to DTC P0100 (Mass Air Flow Circuit Malfunction) on page DI–222.

DTC No.	DTC Detecting Condition	Trouble Area
P0101	Conditions (a), (b) and (c) continue 10 sec. or more with engine speed NE < 900: (2 trip detection logic) (a) Throttle valve fully closed (b) Mass air flow meter output > 2.2 V (c) THW ≧ 70°C	●Mass air flow meter
	Conditions (a) and (b) continue 10 sec. or more with engine speed 1,500 rpm or more: (2 trip detection logic) (a) VTA ≧ 0.63 V (b) Mass air flow meter output ~ 1.06 V	

WIRING DIAGRAM

Refer to DTC P0100 (Mass Air Flow Circuit Malfunction) on page DI–222.

INSPECTION PROCEDURE

HINT:
Read freeze frame data using TOYOTA hand–held tester or OBD II scan tool. Because freeze frame records the engine conditions when the malfunction is detected, when troubleshooting it is useful for determining whether the vehicle was running or stopped, the engine warmed up or not, the air–fuel ratio lean or rich, etc. at the time of the malfunction.

1	Are there any other codes (besides DTC P0101) being output?

NO → Replace mass air flow meter.

YES →

Go to relevant DTC chart.

DI07H–07

DTC	P0110	Intake Air Temp. Circuit Malfunction

CIRCUIT DESCRIPTION

The intake air temp. sensor is built into the air flow meter and senses the intake air temperature.
A thermistor built in the sensor changes the resistance value according to the intake air temperature.
The lower the intake air temperature, the greater the thermistor resistance value, and the higher the intake air temperature, the lower the thermistor resistance value (See Fig. 1).
The intake air temperature sensor is connected to the ECM. The 5 V power source voltage in the ECM is applied to the intake air temperature sensor from the terminal THA via resistor R.
That is, the resistor R and the intake air temperature sensor are connected in series. When the resistance value of the intake air temperature sensor changes in accordance with changes in the intake air temperature, the potential at terminal THA also changes. Based on this signal, the ECM increases the fuel injection volume to improve driveability during cold engine operation.
If the ECM detects the DTC P0110, it operates the fail–safe function in which the intake air temperature is assumed to be 20˚C (68˚F).

(fig. 1)

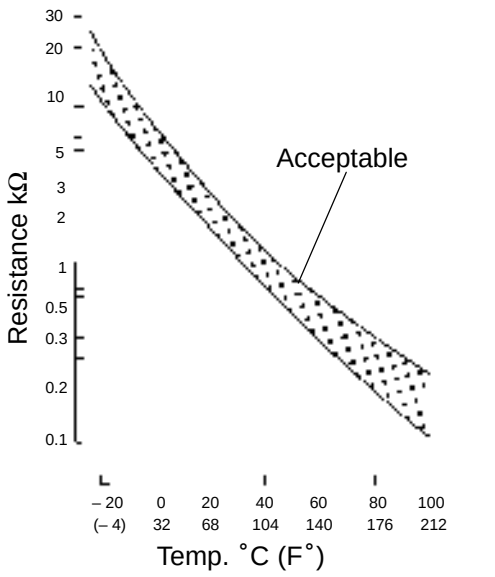

<Reference>

Intake air temp. ˚C (˚F)	Resistance (kΩ)	Voltage (V)
–20 (–4)	16.0	4.3
0 (32)	5.9	3.4
20 (68)	2.5	2.4
40 (104)	1.1	1.4
60 (140)	0.6	0.9
80 (176)	0.3	0.5
100 (212)	0.1	0.2

DTC No.	DTC Detecting Condition	Trouble Area
P0110	Open or short in intake air temp. sensor circuit	●Open or short in intake air temp. sensor circuit ●Intake air temp. sensor (built into mass air flow meter) ●ECM

HINT:
After confirming DTC P0110, use the OBD II scan tool or TOYOTA hand–held tester to confirm the intake air temp. from ”CURRENT DATA”.

Temp. Displayed	Malfunction
–40˚C (–40˚F)	Open circuit
140˚C (284˚F) or more	Short circuit

WIRING DIAGRAM

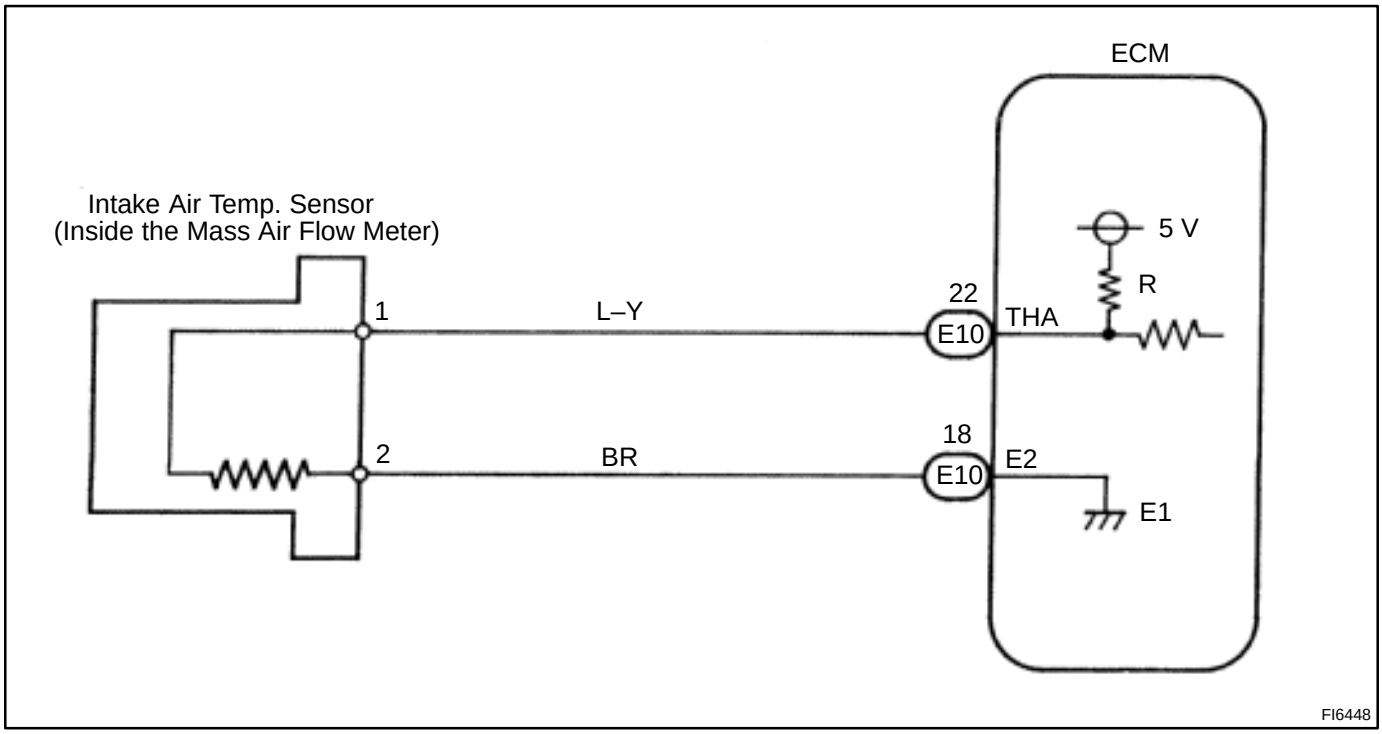

INSPECTION PROCEDURE

HINT:

- If DTCs P0110 (Intake Air Temp. Circuit Malfunction), P0115 (Engine Coolant Temp. Circuit Malfunction), P0120 (Throttle/Pedal Position Sensor/Switch ”A” Circuit Malfunction) and P1410 (EGR Valve Position Sensor Circuit Malfunction) are output simultaneously, E2 (Sensor Ground) may be open.
- Read freeze frame data using TOYOTA hand–held tester or OBD II scan tool. Because freeze frame records the engine conditions when the malfunction is detected, when troubleshooting it is useful for determining whether the vehicle was running or stopped, the engine warmed up or not, the air–fuel ratio lean or rich, etc. at the time of the malfunction.

1	**Connect OBD II scan tool or TOYOTA hand–held tester, and read value of intake air temp.**

PREPARATION:

(a) Connect the OBD II scan tool or TOYOTA hand–held tester to the DLC3.

(b) Turn the ignition switch ON and push the OBD II scan tool or TOYOTA hand–held tester main switch ON.

CHECK:

Read temp. value on the OBD II scan tool or TOYOTA hand–held tester.

OK:

Same as actual intake air temp.

HINT:

- If there is open circuit, OBD II scan tool or TOYOTA hand–held tester indicates –40˚C (–40˚F).
- If there is short circuit, OBD II scan tool or TOYOTA hand–held tester indicates 140˚C (284˚F) or more.

NG → **–40˚C (–40˚F) ... Go to step 2.**
140˚C (284˚F) or more ... Go to step 4.

OK

Check for intermittent problems (See page DI–197).

2	**Check for open in harness or ECM.**

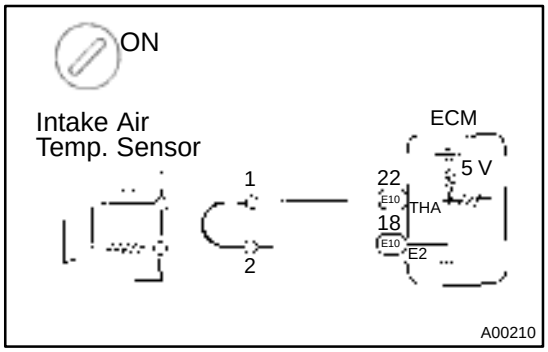

PREPARATION:

(a) Disconnect the mass air flow meter connector.

(b) Connect sensor wire harness terminals together.

(c) Turn the ignition switch ON.

CHECK:

Read temp. value on the OBD II scan tool or TOYOTA hand–held tester.

OK:

Temp. value: 140°C (284°F) or more

OK → **Confirm good connection at sensor.**
If OK, replace mass air flow meter.

NG

3	Check for open in harness or ECM.

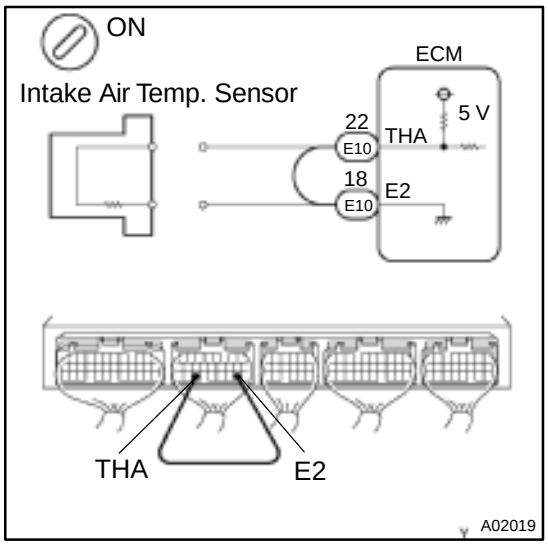

PREPARATION:

(a) Remove the glove compartment (See page SF–73).

(b) Connect between terminals THA and E2 of ECM connector.

HINT:

Mass air flow meter connector is disconnected.

Before checking, do a visual and contact pressure check for the ECM connector (See page IN–31).

CHECK:

Read temp. value on the OBD II scan tool or TOYOTA hand–held tester.

OK:

Temp. value: 140°C (284°F) or more

OK	Open in harness between terminal E2 or THA, repair or replace harness.

NG

Confirm good connection at ECM.
If OK, check and replace ECM.

4	Check for short in harness and ECM.

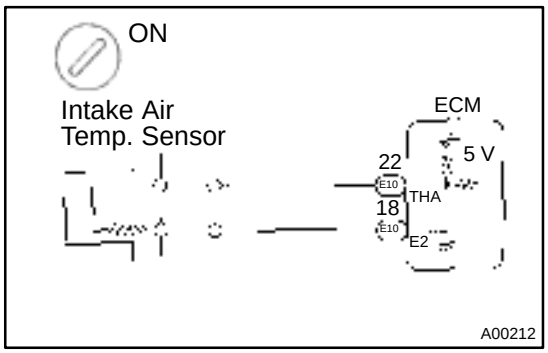

PREPARATION:

(a) Disconnect the mass air flow meter connector.

(b) Turn the ignition switch ON.

CHECK:

Read temp. value on the OBD II scan tool or TOYOTA hand–held tester.

OK:

Temp. value: –40°C (–40°F)

OK	Replace mass air flow meter.

NG

5	Check for short in harness or ECM.

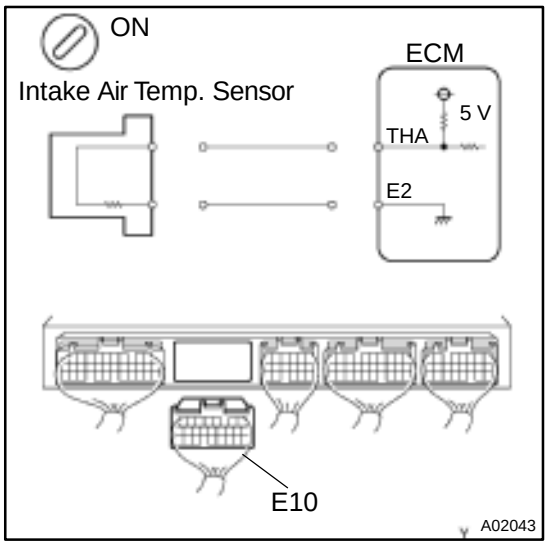

PREPARATION:

(a) Remove the glove compartment (See page SF–73).

(b) Disconnect the E10 connector of ECM.

HINT:

Mass air flow meter connector is disconnected.

(c) Turn the ignition switch ON.

CHECK:

Read temp. value on the OBD II scan tool or TOYOTA hand–held tester.

OK:

Temp. value: – 40°C (– 40°F)

OK	Repair or replace harness or connector.

NG

Check and replace ECM (See page IN–31).

DI07I–06

DTC	P0115	Engine Coolant Temp. Circuit Malfunction

CIRCUIT DESCRIPTION

A thermistor built into the engine coolant temp. sensor changes the resistance value according to the engine coolant temp.

The structure of the sensor and connection to the ECM is the same as in the intake air temp. circuit malfunction shown on page DI–228.

If the ECM detects the DTC P0115, it operates fail–safe function in which the engine coolant temperature is assumed to be 80˚C (176˚F).

DTC No.	Detection Item	Trouble Area
P0115	Open or short in engine coolant temp. sensor circuit	●Open or short in engine coolant temp. sensor circuit ●Engine coolant temp. sensor ●ECM

HINT:

After confirming DTC P0115, use the OBD II scan tool or TOYOTA hand–held tester to confirm the engine coolant temp. from CURRENT DATA.

Temperature Displayed	Malfunction
–40˚C (–40˚F)	Open circuit
140˚C (284˚F) or more	Short circuit

WIRING DIAGRAM

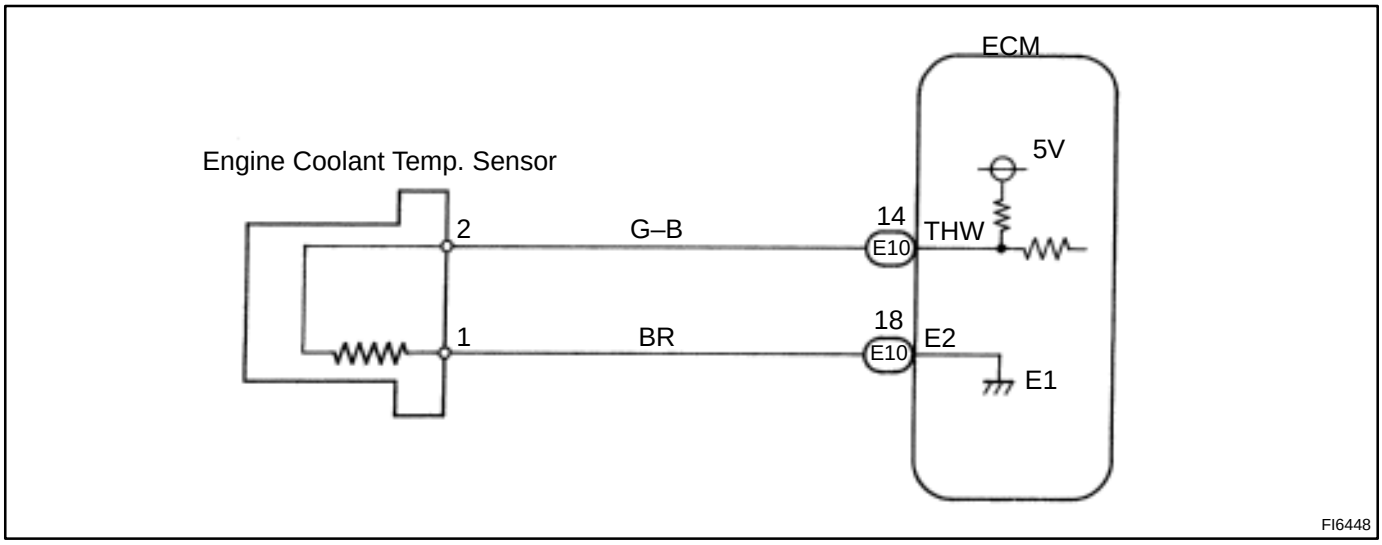

INSPECTION PROCEDURE

HINT:

- If DTCs P0110 (Intake Air Temp. Circuit Malfunction), P0115 (Engine Coolant Temp. Circuit Malfunction), P0120 (Throttle/Pedal/Position Sensor/Switch ”A” Circuit Malfunction) and P1410 (EGR Valve Position Sensor Circuit Malfunction) are output simultaneously, E2 (Sensor Ground) may be open.
- Read freeze frame data using TOYOTA hand–held tester or OBD II scan tool. Because freeze frame records the engine conditions when the malfunction is detected, when troubleshooting it is useful for determining whether the vehicle was running or stopped, the engine warmed up or not, the air–fuel ratio lean or rich, etc. at the time of the malfunction.

1	**Connect OBD II scan tool or TOYOTA hand–held tester, and read value of engine coolant temperature.**

PREPARATION:

(a) Connect the OBD II scan tool or TOYOTA hand–held tester to the DLC3.

(b) Turn the ignition switch ON and push the OBD II scan tool or TOYOTA hand–held tester main switch ON.

CHECK:

Read temperature value on the OBD II scan tool or TOYOTA hand–held tester.

OK:

Same as actual engine coolant temperature.

HINT:

- If there is open circuit, OBD II scan tool or TOYOTA hand–held tester indicates –40˚C (–40˚F).
- If there is open circuit, OBD II scan tool or TOYOTA hand–held tester indicates 140˚C (284˚F) or more.

NG → **–40˚C (–40˚F) ... Go to step 2.**
140˚C (284˚F) or more ... Go to step 4.

OK

Check for intermittent problems (See page DI–197).

2	**Check for open in harness or ECM.**

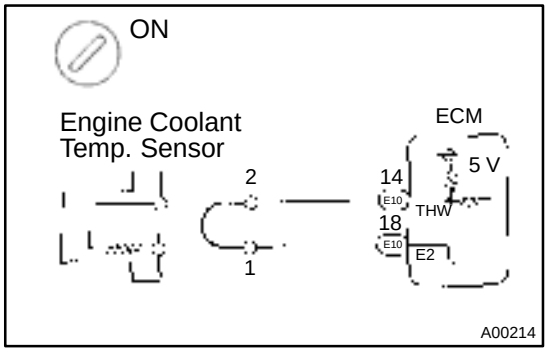

PREPARATION:

(a) Disconnect the engine coolant temp. sensor connector.

(b) Connect the sensor wire harness terminals together.

(c) Turn the ignition switch ON.

CHECK:

Read temp. value on the OBD II scan tool or TOYOTA hand–held tester.

OK:

Temperature value: 140°C (284°F) or more

OK → **Confirm good connection at sensor.**
If OK, replace engine coolant temp. sensor.

NG

3	Check for open in harness or ECM.

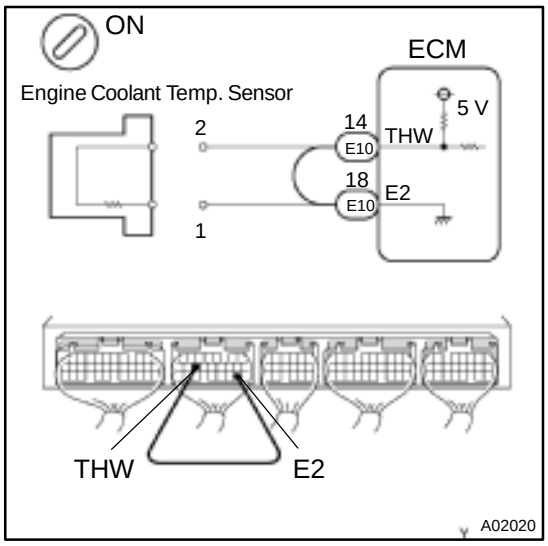

PREPARATION:

(a) Remove the glove compartment (See page SF–73).

(b) Connect between terminals THW and E2 of the ECM connector.

HINT:

Engine coolant temp. sensor connector is disconnected. Before checking, do a visual and contact pressure check for the ECM connector (See page IN–31).

(c) Turn the ignition switch ON.

CHECK:

Read temperature. value on the OBD II scan tool or TOYOTA hand–held tester.

OK:

Temperature value: 140°C (284°F) or more

OK	Open in harness between terminal E2 or THW, repair or replace harness.

NG

Confirm good connection at ECM.
If OK, check and replace ECM.

4	Check for short in harness and ECM.

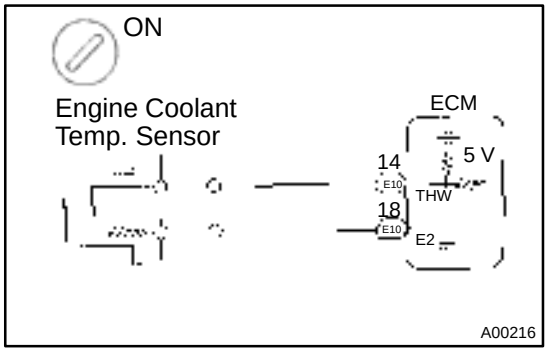

PREPARATION:

(a) Disconnect the engine coolant temp. sensor connector.

(b) Turn the ignition switch ON.

CHECK:

Read temperature value on the OBD II scan tool or TOYOTA hand–held tester.

OK:

Temperature value: –40°C (–40°F)

OK	Replace engine coolant temp. sensor.

NG

5	Check for short in harness or ECM.

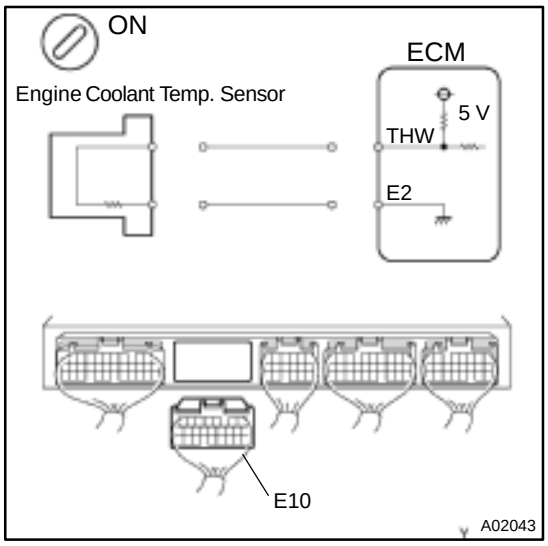

PREPARATION:

(a) Remove the glove compartment (See page SF–73).

(b) Disconnect the E10 connector of the ECM.

HINT:

Engine coolant temp. sensor connector is disconnected.

(c) Turn the ignition switch ON.

CHECK:

Read temperature value on the OBD II scan tool or TOYOTA hand–held tester.

OK:

Temperature value: –40°C (–40°F)

OK → **Repair or replace harness or connector.**

NG

Check and replace ECM (See page IN–31).

DI07J–06

DTC	P0116	Engine Coolant Temp. Circuit Range/ Performance Problem

CIRCUIT DESCRIPTION

Refer to DTC P0115 (Engine Coolant Temp. Circuit Malfunction) on page DI–233.

DTC No.	DTC Detecting Condition	Trouble Area
P0116	If THW ⍁ –7˚C (19.4˚F), 20 min. or more after starting engine, engine coolant temp. sensor value is 20˚C (68˚F) or less (2 trip detection logic)	●Engine coolant temp. sensor ●Cooling system
	If THW ～ –7˚C (19.4˚F) and ⍁ 10˚C (50˚F), 5 min. or more after starting engine, engine coolant temp. sensor value is 20˚C (68˚F) or less (2 trip detection logic)	
	If THW ～ 10˚C (50 ˚F), 2 min. or more after starting engine, engine coolant temp. sensor value is 30˚C (86˚F) (2 trip detection logic)	
	When THW ～ 35˚C (95˚F) or more and less than 60˚C (140˚F), THA ～ – 6.7˚C (19.9˚F) or more, when starting engine , condition (a) and (b) continues: (a) Vehicle speed is changing (Not stable) (b) When starting engine, THW< 3˚C (37.4˚F) (2 trip detection logic)	

INSPECTION PROCEDURE

HINT:

- If DTCs P0115 (Engine Coolant Temp. Circuit Malfunction) and P0116 (Engine Coolant Temp. Circuit Range/Performance) are output simultaneously, engine coolant temp. sensor circuit may be open. Perform troubleshooting of DTC P0115 first.
- Read freeze frame data using TOYOTA hand–held tester or OBD II scan tool. Because freeze frame records the engine conditions when the malfunction is detected, when troubleshooting it is useful for determining whether the vehicle was running or stopped, the engine warmed up or not, the air–fuel ratio lean or rich, etc. at the time of the malfunction.

1	Are there any other codes (besides DTC P0116) being output?

YES → Go to relevant DTC chart.

NO

2	Check thermostat (See page CO–9).

NG → Replace thermostat.

OK →

Replace engine coolant temp. sensor.

DTC	P0120	Throttle/Pedal Position Sensor/Switch ”A” Circuit Malfunction

CIRCUIT DESCRIPTION

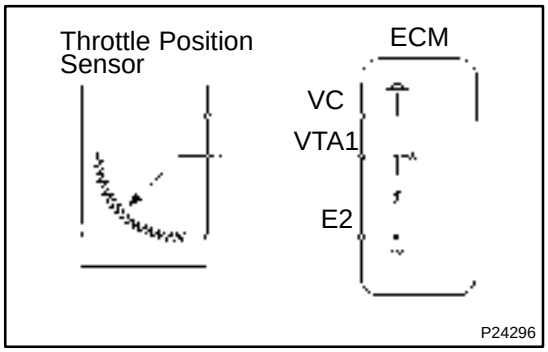

The throttle position sensor is mounted in the throttle body and detects the throttle valve opening angle. When the throttle valve is fully closed, a voltage of approximately 0.7 V is applied to terminal VTA of the ECM. The voltage applied to the terminals VTA of the ECM increases in proportion to the opening angle of the throttle valve and becomes approximately 2.7 ~ 5.2 V when the throttle valve is fully opened. the ECM judges the vehicle driving conditions from these signals input from terminals VTA and uses them as one of the conditions for deciding the air–fuel ratio correction, power increase correction and fuel–cut control etc.

DTC No.	DTC Detecting Condition	Trouble Area
P0120	Condition (a) or (b) continues: (a) VTA 0.1 V (b) VTA 4.9 V	●Open or short in throttle position sensor circuit ●Throttle position sensor ●ECM

HINT:

After confirming DTC P0120, use the OBD II scan tool or TOYOTA hand–held tester to confirm the throttle valve opening percentage and closed throttle position switch condition.

Throttle valve opening position expressed as percentage		Trouble Area
Throttle valve fully closed	Throttle valve fully open	
0 %	0 %	VC line open VTA line open or short
Approx. 100 %	Approx. 100 %	E2 line open

WIRING DIAGRAM

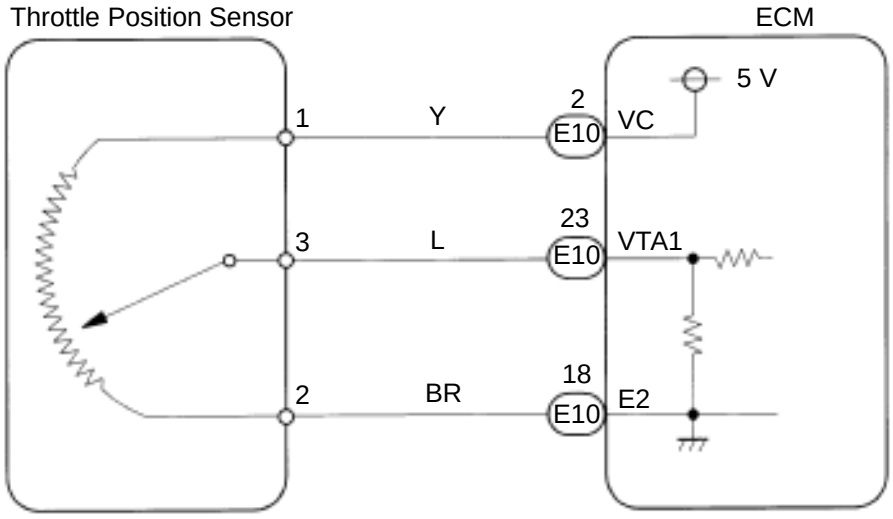

INSPECTION PROCEDURE

HINT:

- If DTCs P0110(Intake Air temp. Circuit Malfunction), P0115(Engine Coolant Temp. Circuit Malfunction), P0120(Throttle/Pedal Position Sensor/Switch ”A” Circuit Malfunction) and P1410 are output simultaneously, E2 (Sensor Ground) may be open.
- Read freeze frame data using TOYOTA hand–held tester or OBD II scan tool. Because freeze frame records the engine conditions when the malfunction is detected, when troubleshooting it is useful for determining whether the vehicle was running or stopped, the engine warmed up or not, the air–fuel ratio lean or rich, etc. at the time of the malfunction.

1	**Connect OBD II scan tool or TOYOTA hand–held tester, and read throttle valve opening percentage.**

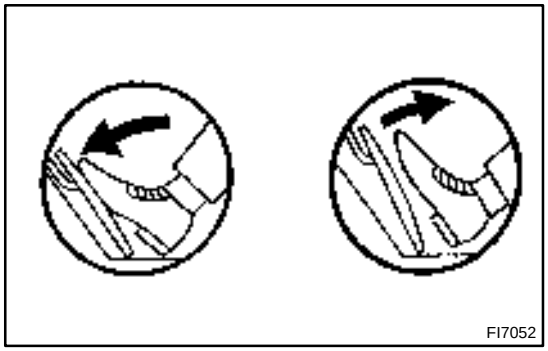
FI7052

PREPARATION:

(a) Connect the OBD II scan tool or TOYOTA hand–held tester to DLC3.

(b) Turn the ignition switch ON and push the OBD II scan tool or TOYOTA hand–held tester main switch ON.

CHECK:

Read the throttle valve opening percentage.

OK:

Throttle valve	Throttle valve opening position expressed as percentage
Fully open	Approx. 75 %
Fully closed	Approx. 10 %

OK → **Check for intermittent problems (See page DI–197).**

NG

2	Check voltage between terminal 1 of wire harness side connector and body ground.

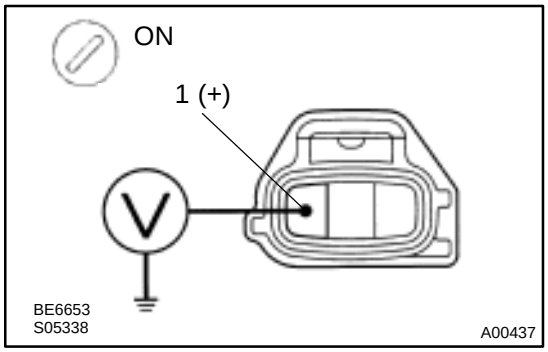

PREPARATION:

(a) Disconnect the throttle position sensor connector.

(b) Turn the ignition switch ON.

CHECK:

Measure voltage between terminal 1 of wire harness side connector and body ground.

OK:

Voltage: 4.5 ~ 5.5 V

NG → **Go to step 5.**

OK

3	Check throttle position sensor.

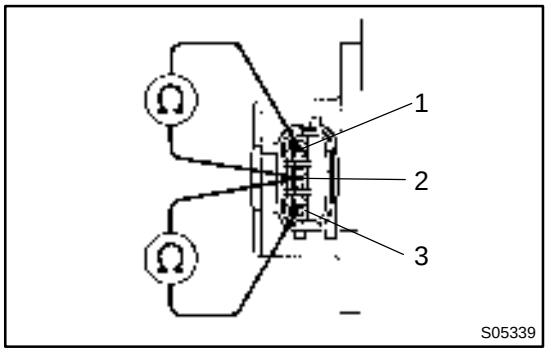

PREPARATION:

Disconnect the throttle position sensor connector.

CHECK:

Measure voltage between terminals 1, 3 and 2 of throttle position sensor.

OK:

Terminals	Throttle valve	Resistance
1 ~ 2	—	2.5 ~ 5.9 kΩ
3 ~ 2	Fully closed	0.2 ~ 6.3 kΩ
3 ~ 2	Fully open	2.0 ~ 10.2 kΩ

NG → **Replace throttle position sensor.**

OK

4	Check voltage between terminals VTA1 and E2 of ECM.

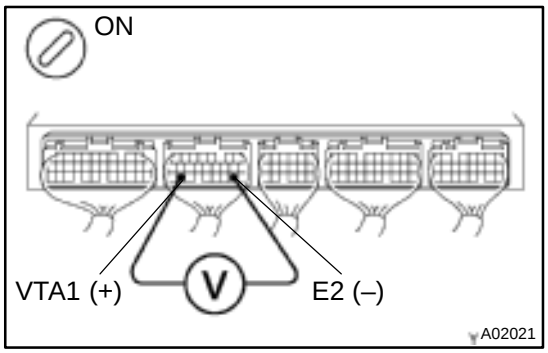

PREPARATION:

(a) Remove the glove compartment (See page SF–73).

(b) Turn the ignition switch ON.

CHECK:

Measure voltage between terminals VTA1 and E2 of the ECM connector.

OK:

Throttle valve	Voltage
Fully closed	0.3 ~ 1.0 V
Fully open	2.7 ~ 5.2 V

NG → **Check for open and short in harness and connector between ECM and throttle position sensor (VTA line) (See page IN–31).**

OK

Check and replace ECM (See page IN–31).

5	Check voltage between terminals VC and E2 of ECM.

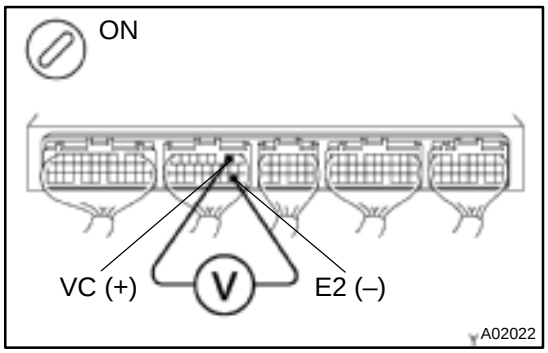

PREPARATION:

(a) Remove the glove compartment (See page SF–73).

(b) Turn the ignition switch ON.

CHECK:

Measure voltage between terminals VC and E2 of the ECM connector.

OK:

Voltage: 4.5 ~ 5.5 V

NG → **Check and replace ECM (See page IN–31).**

OK

Check for open in harness and connector between ECM and sensor (VC line) (See page IN–31).

DI07L–06

DTC	P0121	Throttle/Pedal Position Sensor/Switch ”A” Circuit Range/Performance Problem

CIRCUIT DESCRIPTION

Refer to DTC P0120 (Throttle/Pedal Position Sensor/Switch ”A” Circuit Malfunction) on page DI–239.

DTC No.	DTC Detecting Condition	Trouble Area
P0121	After vehicle speed has been exceeded 30 km/h (19 mph) even once, output value of throttle position sensor is out of applicable range while vehicle speed between 30 km/h (19 mph) and 0 km/h (0 mph) (2 trip detection logic)	●Throttle position sensor

INSPECTION PROCEDURE

HINT:

Read freeze frame data using TOYOTA hand–held tester or OBD II scan tool. Because freeze frame records the engine conditions when the malfunction is detected, when troubleshooting it is useful for determining whether the vehicle was running or stopped, the engine warmed up or not, the air–fuel ratio lean or rich, etc. at the time of the malfunction.

1	Are there any other codes (besides DTC P0121) being output?

YES → Go to relevant DTC chart.

NO →

Replace throttle position sensor.

DTC	P0125	Insufficient Coolant Temp. for Closed Loop Fuel Control (Except California Spec.)

CIRCUIT DESCRIPTION

To obtain a high purification rate for the CO, HC and NOx components of the exhaust gas, a three–way catalytic converter is used, but for the most efficient use of the three–way catalytic converter, the air–fuel ratio must be precisely controlled so that it is always close to the stoichiometric air–fuel ratio.

The oxygen sensor has the characteristic whereby its output voltage changes suddenly in the vicinity of the stoichiometric air–fuel ratio. This characteristic is used to detect the oxygen concentration in the exhaust gas and provide feedback to the computer for control of the air–fuel ratio.

When the air–fuel ratio becomes LEAN, the oxygen concentration in the exhaust increases and the oxygen sensor informs the ECM of the LEAN condition (small electromotive force: < 0.45 V).

When the air–fuel ratio is RICHER than the stoichiometric air–fuel ratio the oxygen concentration in the exhaust gas is reduced and the oxygen sensor informs the ECM of the RICH condition (large electromotive force: > 0.45 V). The ECM judges by the electromotive force from the oxygen sensor whether the air–fuel ratio is RICH or LEAN and controls the injection time accordingly. However, if malfunction of the oxygen sensor causes output of abnormal electromotive force, the ECM is unable to perform accurate air–fuel ratio control.

The heated oxygen sensors include a heater which heats the zirconia element. The heater is controlled by the ECM. When the intake air volume is low (the temperature of the exhaust gas is low) current flows to the heater to heat the sensor for accurate oxygen concentration detection.

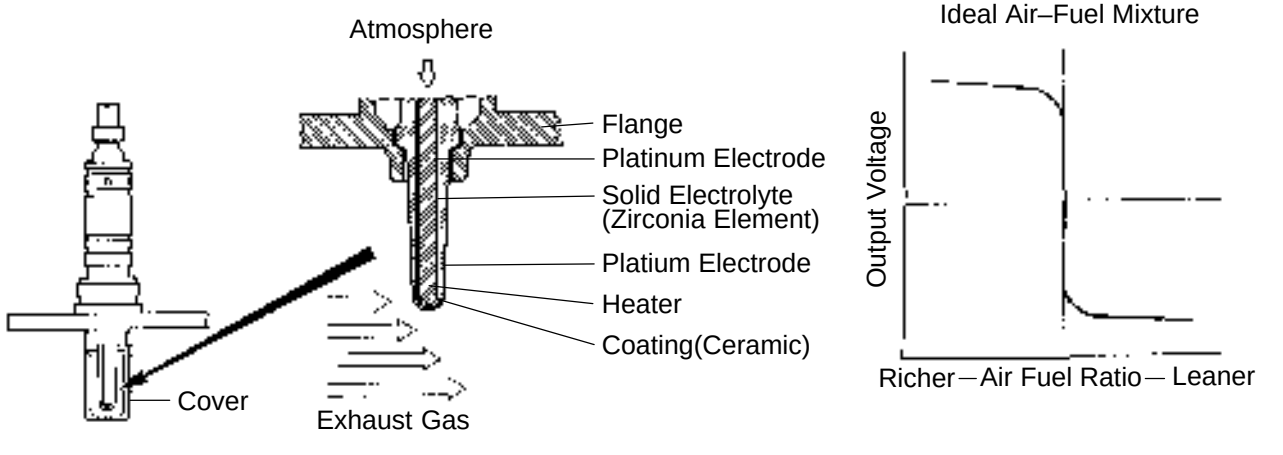

DTC No.	DTC Detecting Condition	Trouble Area
P0125	After engine is warmed up, heated oxygen sensor (bank 1, 2 sensor 1) output does not indicate RICH (> 0.45 V) even once when conditions (a), (b), (c) and (d) continue for at least 2 min.: (a) Engine speed: 1,500 rpm or more (b) Vehicle speed: 40 ~ SPD and 100 km/h (25 ~ SPD and 62 mph) (c) Throttle valve does not fully closed (d) 140 sec. or more after starting engine	●Fuel system ●Injector ●Ignition system ●Gas leakage on exhaust system ●Open or short in heated oxygen sensors (bank 1, 2 sensor 1) circuit ●Heated oxygen sensors (bank 1, 2 sensor 1) ●ECM

HINT:
After confirming DTC P0125, use the OBD II scan tool or TOYOTA hand−held tester to confirm voltage output of the heated oxygen sensors (bank 1, 2 sensor 1) from CURRENT DATA.
If voltage output of the heated oxygen sensors (bank 1, 2 sensor 1) is less than 0.1 V, heated oxygen sensors (bank 1, 2 sensor 1) circuit may be open or short.

WIRING DIAGRAM

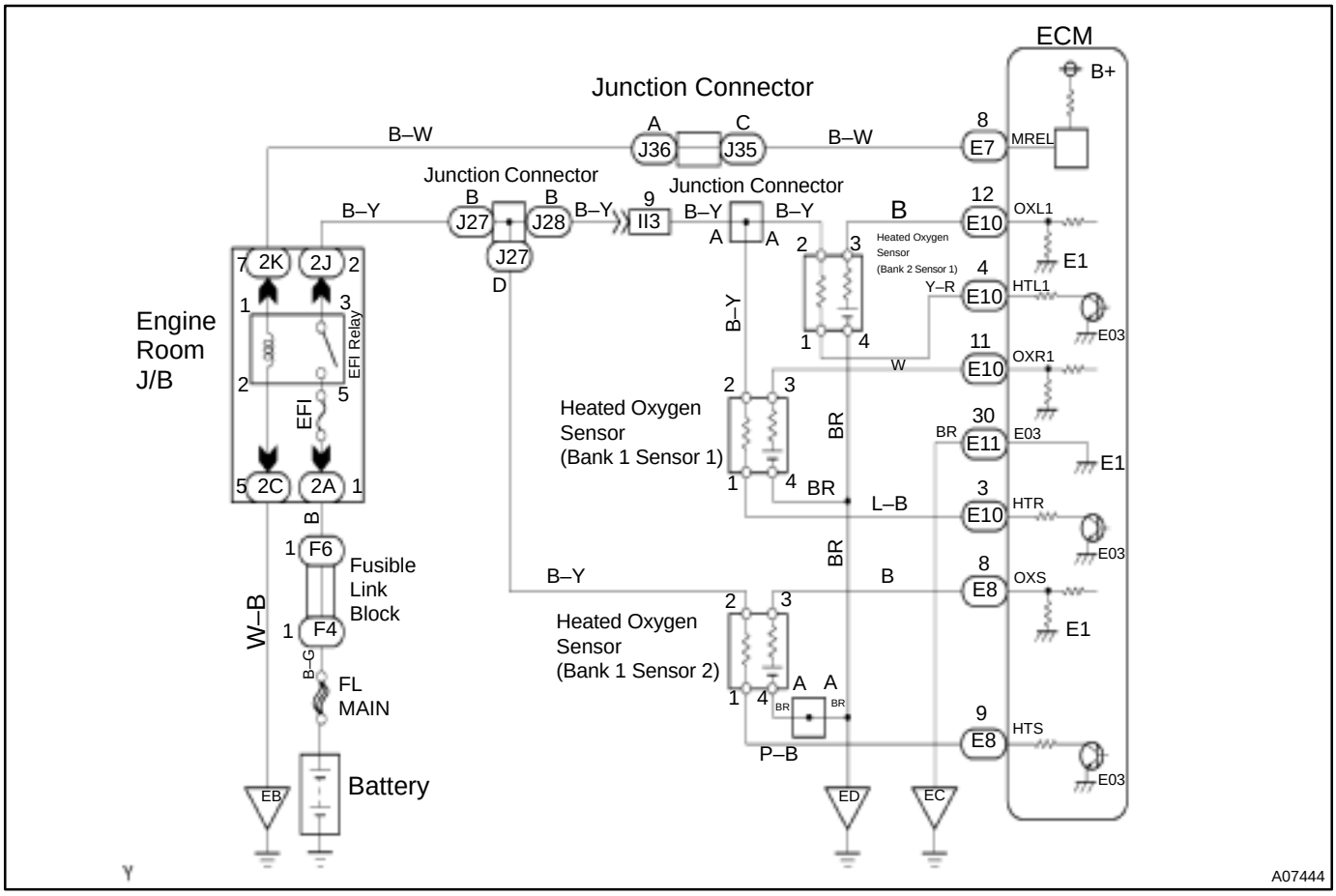

INSPECTION PROCEDURE

HINT:

- If the vehicle run out fuel, the air–fuel ratio is LEAN and DTC P0125 will be recorded. The MIL then comes on.
- Read freeze frame data using TOYOTA hand–held tester or OBD II scan tool. Because freeze frame records the engine conditions when the malfunction is detected, when troubleshooting it is useful for determining whether the vehicle was running or stopped, the engine warmed up or not, the air–fuel ratio lean or rich, etc. at the time of the malfunction.

1	**Are there any other codes (besides DTC P0125) being output ?**

YES → **Go to relevant DTC chart.**

NO

2	**Connect OBD II scan tool or TOYOTA hand–held tester, and read value for voltage output of heated oxygen sensors (bank 1, 2 sensor 1).**

PREPARATION:

(a) Connect the OBD II scan tool or TOYOTA hand–held tester to the DLC3.

(b) Warm up the engine to normal operating temp.(above 75˚C (169˚F)).

CHECK:

Read voltage output of the heated oxygen sensors (bank 1,2 sensor 1) when engine is suddenly raced.

HINT:

Perform quick racing to 4,000 rpm 3 times using accelerator pedal.

OK:

Heated oxygen sensors (bank 1, 2 sensor 1) output a RICH signal (0.45 V or more) at least once.

OK → **Go to step 10.**

NG

3	**Check for open and short in harness and connector between ECM and heated oxygen sensors (bank 1, 2 sensor 1) (See page IN–31).**

NG → **Repair or replace harness or connector.**

OK

4	Check whether misfire is occurred or not by monitoring DTC and data list.

NG → Perform troubleshooting for misfire (See page DI–351).

OK ↓

5	Check air induction system (See page SF–1).

NG → Repair or replace.

OK ↓

6	Check EGR system (See page EC–11).

NG → Replace EGR system.

OK ↓

7	Check fuel pressure (See page SF–6).

NG → Check and repair fuel pump, fuel pipe line and filter (See page SF–1).

OK ↓

8	Check injector injection (See page SF–25)

NG → Replace injector.

OK ↓

9	Check gas leakage on exhaust system.

NG → Repair or replace.

OK

Replace heated oxygen sensors (bank 1, 2 sensor 1).

10	Perform confirmation driving pattern (See page DI–255).

Go

11	Is there DTC P0125 being output again ?

YES → Check and replace ECM (See page IN–31).

NO

12	Did vehicle runs out of fuel in the past ?

NO → Check for intermittent problems (See page DI–197).

NO

DTC P0125 is caused by running out of fuel.

DI07M–09

DTC	P0125	Insufficient Coolant Temp. for Closed Loop Fuel Control (Only for California Spec.)

CIRCUIT DESCRIPTION

To obtain a high purification rate for the CO, HC and NOx components of the exhaust gas, a three–way catalytic converter is used, but for the most efficient use of the three–way catalytic converter, the air–fuel ratio must be precisely controlled so that it is always close to the stoichiometric air–fuel ratio.

The A/F sensor has the characteristic that provides output voltage* approximately proportional to the existing air–fuel ratio. The A/F sensor output voltage* is used to provide feedback for the ECM to control the air–fuel ratio.

By the A/F sensor output, the ECM can determine the deviation amount from the stoichiometric air–fuel ratio and control the proper injection time immediately. If the A/F sensor is malfunctioning, ECM is unable to perform accurate air–fuel ratio control.

The A/F sensor is equipped with a heater which heats the zirconia element. The heater is controlled by the ECM. When the intake air volume is low (the temp. of the exhaust gas is low), current flows to the heater to heat the sensor for accurate oxygen concentration detection.

*: The voltage value changes at the inside of the ECM only.

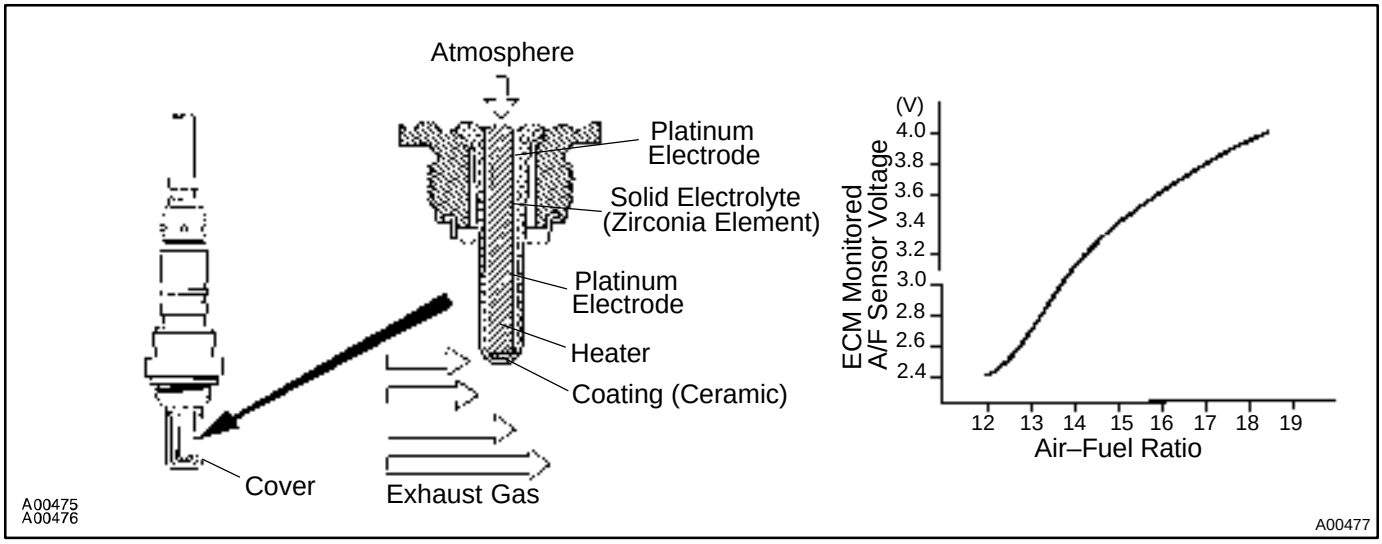

DTC No.	DTC Detecting Condition	Trouble Area
P0125	After engine is warmed up, A/F sensor output* does not change when conditions (a), (b) and (c) continue for at least 1.5 min. *: Output value changes at inside of ECM only. (a) Engine speed: 1,500 rpm or more (b) Vehicle speed: 40 ~ 100 km/h (25 ~ 62 mph) (c) Throttle valve does not fully closed (d) After starting engine ~ 140 sec	●Fuel system ●Injector ●Ignition system ●Gas leakage on exhaust system ●Open or short in A/F sensor circuit (bank 1, 2 sensor 1) ●A/F sensors (bank 1, 2 sensor 1) ●ECM

HINT:

- After confirming DTC P0125, use the OBD II scan tool or TOYOTA hand–held tester to confirm voltage output of heated oxygen sensors (bank 1, 2 sensor 1) from CURRENT DATA.
- The ECM controls the voltage of AFR>, AFL>, AFR≧ and AFL≧ terminals of ECM to the fixed voltage. Therefore, it is impossible to confirm the A/F sensor output voltage without OBD II scan tool or TOYOTA hand–held tester.
- OBD II scan tool (excluding TOYOTA hand–held tester) displays the one fifth of the A/F sensor output voltage which is displayed on the TOYOTA hand–held tester.

WIRING DIAGRAM

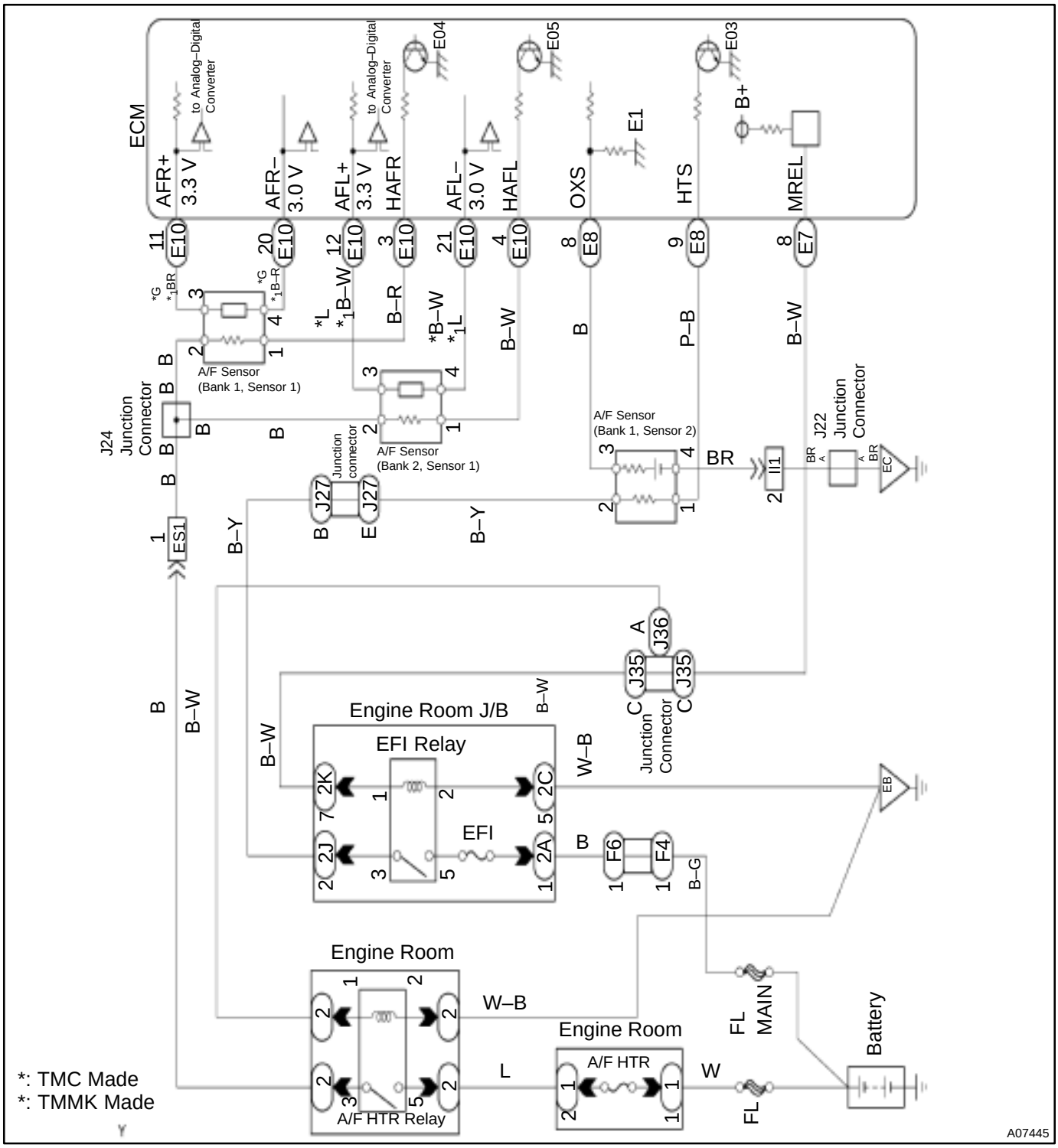

INSPECTION PROCEDURE

HINT:

Read freeze frame data using TOYOTA hand–held tester or OBD II scan tool. Because freeze frame records the engine conditions when the malfunction is detected, when troubleshooting it is useful for determining whether the vehicle was running or stopped, the engine warmed up or not, the air–fuel ratio lean or rich, etc. at the time of the malfunction.

1	**Are there any other codes (besides DTC P0125) being output ?**

YES → **Go to relevant DTC chart.**

NO

2	**Connect the OBD II scan tool or TOYOTA hand–held tester, and read value for voltage output of A/F sensors (bank 1, 2 sensor 1).**

PREPARATION:

(a) Connect the OBD II scan tool or TOYOTA hand–held tester to the DLC3.

(b) Warm up the A/F sensors (bank 1, 2 sensor 1) with the engine at 2,500 rpm for approx. 90 sec.

CHECK:

Read voltage value of A/F sensors (bank 1, 2 sensor 1) on the screen of OBD II scan tool or TOYOTA hand–held tester, when you perform all the following conditions.

HINT:

The voltage of AFR＞,AFL＞ terminal of ECM is 3.3 fixed and the AFR≧,AFL≧ terminal is 3.0 V fixed. Therefore, it is impossible to check the A/F sensor output voltage at the terminals (AFR＞,AFL＞/ AFR≧,AFL≧) of ECM.

OK:

Condition	A/F Sensor Voltage value
Engine idling	●Not remains at 3.3. V (*0.660 V) ●Not remains at 3.8 V (*0.76 V) or more ●Not remains at 2.8 V (*0.56 V) or less *: When you use the OBD II scan tool (excluding TOYOTA hand–held tester)
Engine idling	
Driving at engine speed 1,500 rpm or more and vehicle speed 40 km/h (25 mph) or move, and operate throttle valve open and close	

HINT:

- During fuel enrichment, there is a case that the output voltage of A/F sensors (bank 1, 2 sensor 1) is below 2.8 V (＊0.56 V), it is normal.
- During fuel cut, there is a case that the output voltage of A/F sensors (bank 1, 2 sensor 1) is above 3.8 V (＊0.76 V), it is normal.
- If output voltage of A/F sensors (bank 1, 2 sensor 1) remains at 3.30 V (＊0.660 V) even after performing all the above conditions, A/F sensors (bank 1, 2 sensor 1) circuit may be open.
- If output voltage of A/F sensor remains at 3.8 V (＊0.76 V) or more, or 2.8 V (＊0.56 V) or less even after performing all the above conditions, A/F sensors (bank 1, 2 sensor 1) circuit may be short.

＊: When you use the OBD II scan tool (excluding TOYOTA hand–held tester).

OK → **Go to step 10.**

NG

3	**Check for open and short in harness and connector between ECM and A/F sensors (bank1, 2 sensor1) (See page IN–31).**

NG → **Repair or replace harness or connector.**

OK

4	Check resistance of A/F sensor heaters (bank1, 2 sensor1) (See page SF–68).

NG → Replace A/F sensor.

OK

5	Check air induction system (See page SF–1).

NG → Repair or replace.

OK

6	Check EGR system (See page EC–11).

NG → Replace EGR system.

OK

7	Check fuel pressure (See page SF–21).

NG → Check and repair fuel pump, fuel pipe line and filter (See page SF–1).

OK

8	Check injector injection (See page SF–25).

NG → Replace injector.

OK

9	Check gas leakage on exhaust system.

NG → Repair or replace

OK →

Replace A/F sensors (bank1, 2 sensor1).

10	Perform confirmation driving pattern (See page DI–340).

Go →

11	Is there DTC P0125 being output again ?

YES → Check and replace ECM (See page IN–31).

NO →

12	Did vehicle runs out of fuel in the past ?

NO → Check for intermittent problems (See page DI–197).

YES →

DTC P0125 is caused by running out of fuel.

DTC	P0130	Heated Oxygen Sensor Circuit Malfunction (Bank 1 Sensor 1) (Except California Spec.)

DTC	P0150	Heated Oxygen Sensor Circuit Malfunction (Bank 2 Sensor 1) (Except California Spec.)

CIRCUIT DESCRIPTION

Refer to DTC P0125 (Insufficient Coolant Temp. for Closed Loop Fuel Control) on page DI–244.

DTC No.	DTC Detecting Condition	Trouble Area
P0130 P0150	Voltage output of heated oxygen sensor remains at 0.4 V or more, or 0.55 V or less, during idling after engine is warmed up (2 trip detection logic)	●Heated oxygen sensor ●Fuel trim malfunction

HINT:
Bank 1 refers to the bank that includes cylinder No.1. Bank 2 refers to the bank that does not include cylinder No.1. Sensor 1 refers to the sensor closer to the engine body.
The heated oxygen sensor's output voltage and the short−term fuel trim value can be read using the OBD II scan tool or TOYOTA hand−held tester.

WIRING DIAGRAM

Refer to DTC P0125 (Insufficient Coolant Temp. for Closed Loop Fuel Control) on page DI–244.

CONFIRMATION DRIVING PATTERN

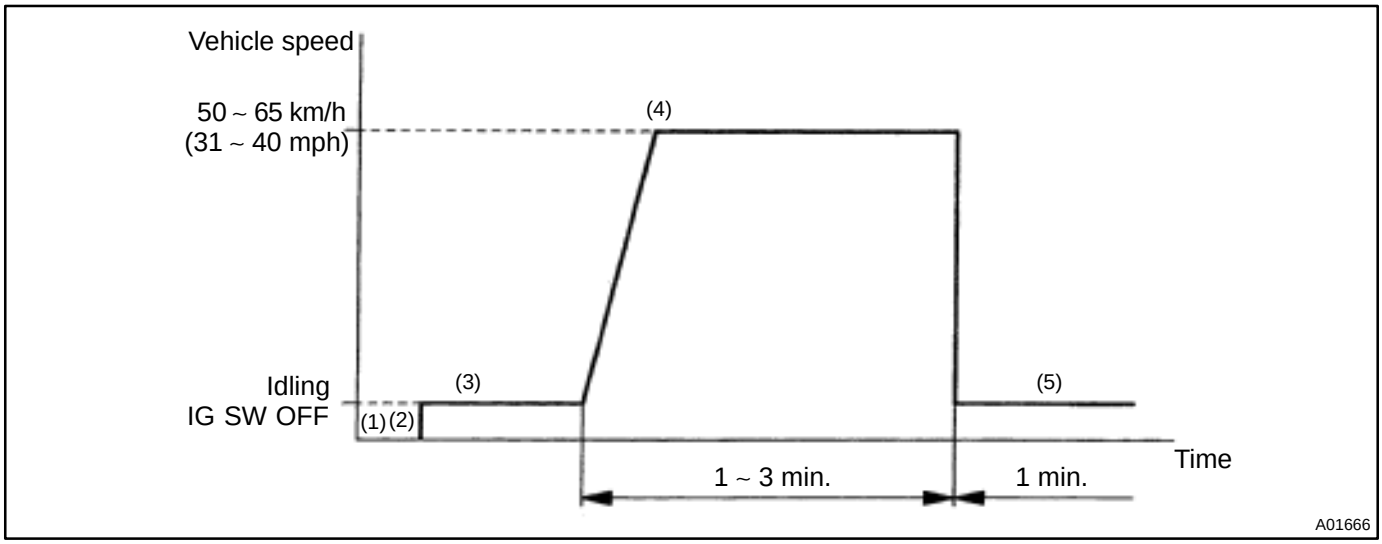

(1) Connect the TOYOTA hand–held tester to the DLC3.
(2) Switch the TOYOTA hand–held tester from normal mode to check mode (See page DI–197).
(3) Start the engine and warm it up with all accessory switches OFF.
(4) Drive the vehicle at 50 ~ 65 km/h (31 ~ 40 mph) for 1 ~ 3 min. to warm up the heated oxygen sensor.
(5) Let the engine idle for 1 min.
(6) Perform steps (3) to (5) three times.

HINT:
If a malfunction exists, the MIL will light up during step (6).
NOTICE:
If the conditions in this test are not strictly followed, detection of the malfunction will not be possible. If you do not have a TOYOTA hand–held tester, turn the ignition switch OFF after performing steps (3) to (6), then perform steps (3) to (6) again.

INSPECTION PROCEDURE

HINT:
Read freeze frame data using TOYOTA hand–held tester or OBD II scan tool. Because freeze frame records the engine conditions when the malfunction is detected, when troubleshooting it is useful for determining whether the vehicle was running or stopped, the engine warmed up or not, the air–fuel ratio lean or rich, etc. at the time of the malfunction.

1	**Are there any other codes (besides DTC P0130, P0150) being output ?**

YES → **Go to relevant DTC chart.**

NO

2	**Check the output voltage of heated oxygen sensors (bank1, 2 sensor1) during idling.**

PREPARATION:
Warm up the heated oxygen sensors (bank1, 2 sensor1) with the engine at 2,500 rpm for approx. 90 sec.
CHECK:
Use the OBD II scan tool or TOYOTA hand–held tester to read the output voltage of the heated oxygen sensors (bank1, 2 sensor1) during idling.
OK:

Heated oxygen sensors (bank1, 2 sensor1) output voltage:
Alternates repeatedly between less than 0.4 V and more than 0.55 V (See the following table).

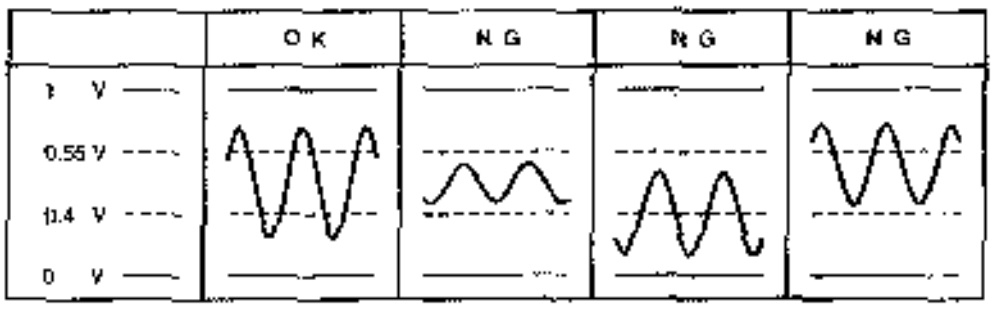

P18349

OK → **Go to step 8.**

NG

3	Check for open and short in harness and connector between ECM and heated oxygen sensors (bank1, 2 sensor1) (See page IN–31).

NG → Repair or replace harness or connector.

OK ↓

4	Check air induction system (See page SF–1).

NG → Repair or replace.

OK ↓

5	Check EGR system (See page EC–11).

NG → Replace EGR system.

OK ↓

6	Check fuel pressure (See page SF–6).

NG → Check and repair fuel pump, fuel pipe line and filter (See page SF–1).

OK ↓

7	Check injector injection (See page SF–25).

NG → Replace injector.

OK →

Replace heated oxygen sensors (bank1, 2 sensor1).

8	Perform confirmation driving pattern.

Go →

9	Are there DTC P0130 and/or P0150 being output again ?

NO → Check for intermittent problems (see page DI–197).

YES →

Check and replace ECM (See page IN–31).

DI4DQ–01

DTC	P0133	Heated Oxygen Sensor Circuit Slow Response (Bank 1 Sensor 1) (Ex. CA Spec.)

DTC	P0153	Heated Oxygen Sensor Circuit Slow Response (Bank 2 Sensor 1) (Ex. CA Spec.)

CIRCUIT DESCRIPTION

Refer to DTC P0125 (Insufficient Coolant Temp. for Closed Loop Fuel Control) on page DI–244.

DTC No.	DTC Detecting Condition	Trouble Area
P0133 P0153	Response time for heated oxygen sensor's voltage output to change from rich to lean, or from lean to rich, is 1 sec. or more during idling after engine is warmed up (2 trip detection logic)	●Heated oxygen sensor ●Fuel trim malfunction

HINT:

Bank 1 refers to the bank that includes cylinder No.1. Bank 2 refers to the bank that does not include cylinder No.1. Sensor 1 refers to the sensor closer to the engine body.

INSPECTION PROCEDURE

HINT:

Read freeze frame data using TOYOTA hand–held tester or OBD II scan tool. Because freeze frame records the engine conditions when the malfunction is detected, when troubleshooting it is useful for determining whether the vehicle was running or stopped, the engine warmed up or not, the air–fuel ratio lean or rich, etc. at the time of the malfunction.

1	Are there any other codes (besides DTC P0133, P0153) being output ?

YES → Go to relevant DTC chart.

NO

2	**Check the output voltage of heated oxygen sensors (bank1, 2 sensor1) during idling.**

PREPARATION:

Warm up the heated oxygen sensors (bank1, 2 sensor1) with the engine at 2,500 rpm for approx. 90 sec.

CHECK:

Use the OBD II scan tool or TOYOTA hand–held tester to read the output voltage of the heated oxygen sensors (bank1, 2 sensor1) during idling.

OK:

Heated oxygen sensors (bank1, 2 sensor1) output voltage:
Alternates repeatedly between less than 0.4 V and more than 0.55 V (See the following table).

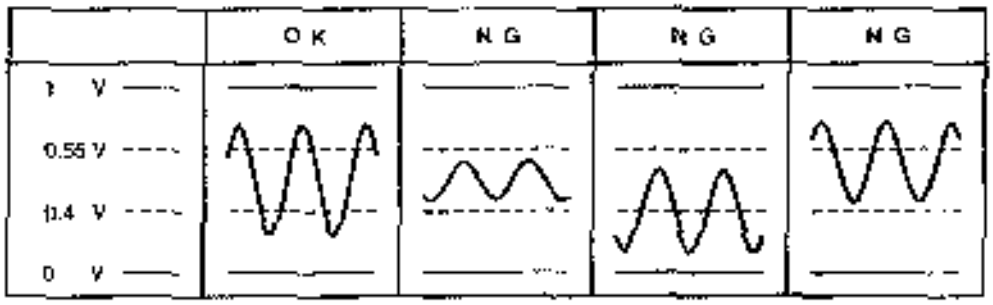

P18349

OK → **Go to step 8.**

NG

3	**Check for open and short in harness and connector between ECM and heated oxygen sensors (bank1, 2 sensor1) (See page IN–31).**

NG → **Repair or replace harness or connector.**

OK

4	**Check air induction system (See page SF–1).**

NG → **Repair or replace.**

OK

5	Check EGR system (See page EC–11).

NG → Replace EGR system.

OK

6	Check fuel pressure (See page SF–1).

NG → Check and repair fuel pump, fuel pipe line and filter (See page SF–1).

OK

7	Check injector injection (See page SF–25).

NG → Replace injector.

OK

Replace heated oxygen sensors (bank1, 2 sensor1).

8	Perform confirmation driving pattern (See page DI–255).

Go

9	Are there DTC P0133 and/or P0153 being output again ?

NO → Check for intermittent problems (see page DI–197).

YES

Check and Replace ECM (See page IN–31).

DI07P–06

DTC	P0135	Heated Oxygen Sensor Heater Circuit Malfunction (Bank 1 Sensor 1) (EX. CA Spec.)

DTC	P0141	Heated Oxygen Sensor Heater Circuit Malfunction (Bank 1 Sensor 2)

DTC	P0155	Heated Oxygen Sensor Heater Circuit Malfunction (Bank 2 Sensor 1) (EX. CA Spec.)

CIRCUIT DESCRIPTION

Refer to DTC P0125 (Insufficient Coolant Temp. for Closed Loop Fuel Control (Except California Spec.)) on page DI–244.

DTC No.	DTC Detecting Condition	Trouble Area
P0135 P0141 P0155	When heater operates, heater current exceeds 2.35 A (2 trip detection logic)	●Open or short in heater circuit of heated oxygen sensor ●Heated oxygen sensor heater ●ECM
	Heater current of 0.2 A or less when heater operates (2 trip detection logic)	

HINT:

- Bank 1 refers to the bank that includes cylinder No.1.
- Bank 2 refers to the bank that does not include cylinder No.1.
- Sensor 1 refers to the sensor closer to the engine body.
- Sensor 2 refers to the sensor farther away from the engine body.

WIRING DIAGRAM

Refer to DTC P0125 (Insufficient Coolant Temp. for Closed Loop Fuel Control (Except California Spec.)) on page DI–244.

INSPECTION PROCEDURE

HINT:

Read freeze frame data using TOYOTA hand–held tester or OBD II scan tool. Because freeze frame records the engine conditions when the malfunction is detected, when troubleshooting it is useful for determining whether the vehicle was running or stopped, the engine warmed up or not, the air–fuel ratio lean or rich, etc. at the time of the malfunction.

1	Check voltage between terminals HTR, HTS, HTL of ECM connectors and body ground.

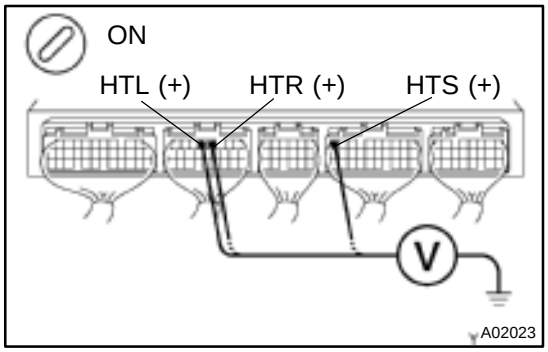

PREPARATION:

(a) Remove the glove compartment (See page SF–73).

(b) Turn the ignition switch ON.

CHECK:

Measure voltage between terminals HTR, HTS, HTL of the ECM connectors and body ground.

HINT:

- Connect terminal HTR to bank 1 sensor 1.
- Connect terminal HTS to bank 1 sensor 2.
- Connect terminal HTL to bank 2 sensor 1.

OK:

Voltage: 9 ~ 14 V

OK	Check and replace ECM (See page IN–31).

NG

2	Check resistance of heated oxygen sensor heater (See page SF–71).

NG	Replace heated oxygen sensor.

OK

Check and repair harness or connector between EFI main relay (Marking: EFI) and heated oxygen sensor, and heated oxygen sensor and ECM (See page IN–31).

DI07Q–06

DTC	P0136	Heated Oxygen Sensor Circuit Malfunction (Bank 1 Sensor 2)

CIRCUIT DESCRIPTION

Refer to DTC P0125 (Insufficient Coolant Temp. for Closed Loop Fuel Control) on page DI–244.

DTC No.	DTC Detecting Condition	Trouble Area
P0136	Voltage output of heated oxygen sensor (bank 1 sensor 2) remains at 0.4 V or more or 0.6*1 0.5*2 V or less when vehicle is driven at 50 km/h (31 mph) or more after engine is warmed up *1: for California Spec. *2: except California Spec. (2 trip detection logic)	●Heated oxygen sensor

HINT:
Bank 1 refers to the bank that includes cylinder No.1. Sensor 2 refers to the sensor farther away from the engine body.

WIRING DIAGRAM

Refer to DTC P0125 (Insufficient Coolant Temp. for Closed Loop Fuel Control) on page DI–244.

INSPECTION PROCEDURE

HINT:
Read freeze frame data using TOYOTA hand–held tester or OBD II scan tool. Because freeze frame records the engine conditions when the malfunction is detected, when troubleshooting it is useful for determining whether the vehicle was running or stopped, the engine warmed up or not, the air fuel ratio lean or rich, etc. at the time of the malfunction.

1	**Are there any other codes (besides DTC P0136) being output ?**

YES → **Go to relevant DTC chart.**

NO ↓

2	**Check for open and short in harness and connector between ECM and heated oxygen sensor (See page IN–31).**

NG → **Repair or replace harness or connector.**

OK ↓

3	**Check output voltage of heated oxygen sensor (bank 1 sensor 2).**

PREPARATION:

(a) Connect the OBD II scan tool or TOYOTA hand–held tester to the DLC3.

(b) Warm up the engine to normal operating temp.

CHECK:

Read voltage output of heated oxygen sensor (bank 1 sensor 2) when engine suddenly raced.

HINT:

Perform quick racing to 4,000 rpm 3 min. using accelerator pedal.

OK:

Heated oxygen sensor output voltage: Alternates from 0.4 V or less to 0.6*1/0.5*2 V or more.

***1: for California Spec.**

***2: except California Spec.**

OK → **Check that each connector is properly connected.**

NG

Replace heated oxygen sensor (bank 1 sensor 2).

DTC	P0171	System too Lean (Fuel Trim) (Only for California Spec.)

DTC	P0172	System too Rich (Fuel Trim) (Only for California Spec.)

CIRCUIT DESCRIPTION

Fuel trim refers to the feedback compensation value compared against the basic injection time. Fuel trim includes short–term fuel trim and long–term fuel trim.

Short–term fuel trim is the short–term fuel compensation used to maintain the air–fuel ratio at its ideal theoretical value.

The signal from the A/F sensor is approximately proportional to the existing air–fuel ratio, and ECM comparing it with the ideal theoretical value, the ECM reduces fuel volume immediately if the air–fuel ratio is rich and increases fuel volume if it is lean.

Long–term fuel trim compensates the deviation from the central value of the short–term fuel trim stored up by each engine tolerance, and the deviation from the central value due to the passage of time and changes of using environment.

If both the short–term fuel trim and long–term fuel trim exceed a certain value, it is detected as a malfunction and the MIL lights up.

DTC No.	DTC Detecting Condition	Trouble Area
P0171	When air fuel ratio feedback is stable after engine warming up, fuel trim is considerably in error on RICH side (2 trip detection logic)	●Gas leakage on exhaust system ●Air intake (hose loose) ●Fuel line pressure ●Injector blockage ●Mass air flow meter ●Engine coolant temp. sensor ●A/F sensors (bank 1, 2 sensor 1)
P0172	When air fuel ratio feedback is stable after engine warming up, fuel trim is considerably in error on LEAN side (2 trip detection logic)	●Gas leakage on exhaust system ●Fuel line pressure ●Injector leak, blockage ●Mass air flow meter ●Engine coolant temp. sensor ●A/F sensors (bank 1, 2 sensor 1)

HINT:

- When the DTC P0171 is recorded, the actual air–fuel ratio is on the lean side. When DTC P0172 is recorded, the actual air–fuel ratio is on the rich side.
- If the vehicle runs out of fuel, the air–fuel ratio is lean and DTC P0171 is recorded. The MIL then comes on.
- If the total of the short–term fuel trim value and long–term fuel trim value is within ± 35 % (80°C (176°F) or more), the system is functioning normally.
- The A/F sensors (bank 1, 2 sensor 1) output voltage and the short–term fuel trim value can be read using the OBD II scan tool or TOYOTA hand–held tester.
- The ECM controls the voltage of AFR～, AFL～, AFR＞ and AFL＞ terminals of ECM to the fixed voltage. Therefore, it is impossible to confirm the A/F sensor output voltage without OBD II scan tool or TOYOTA hand–held tester.
- OBD II scan tool (excluding TOYOTA hand–held tester) displays the one fifth of the A/F sensors (bank 1, 2 sensor 1) output voltage which is displayed on the TOYOTA hand–held tester.

INSPECTION PROCEDURE

Read freeze frame data using TOYOTA hand–held tester or OBD II scan tool. Because freeze frame records the engine conditions when the malfunction is detected, when troubleshooting it is useful for determining whether the vehicle was running or stopped, the engine warmed up or not, the air–fuel ratio lean or rich, etc. at the time of the malfunction.

1	**Check air induction system (See page SF–1).**

NG → **Repair or replace.**

OK

2	**Check injector injection (See page SF–25).**

NG → **Replace injector.**

OK

3	**Check mass air flow meter and engine coolant temp. sensor (See pages SF–35 and SF–63).**

NG → **Repair or replace.**

OK

4	Check for spark and ignition (See page IG–1).

NG → Repair or replace.

OK

5	Check fuel pressure (See page SF–21).

NG → Check and repair fuel pump, pressure regulator, fuel pipe line and filter (See page SF–1).

OK

6	Check gas leakage on exhaust system.

NG → Repair or replace.

OK

7	Check the output voltage A/F sensors (bank1, 2 sensor1).

PREPARATION:

(a) Connect the OBDII scan tool or TOYOTA hand–held tester to the DLC3.

(b) Warm up the A/F sensors (bank1, 2 sensor1) with the engine at 2,500 rpm for approx. 90 sec.

CHECK:

Read voltage value of A/F sensors (bank1, 2 sensor1) on the screen of OBDII scan tool or TOYOTA hand–held tester when you perform all the following conditions.

HINT:

The voltage of AFR～, AFL～ terminal of ECM is 3.3 fixed AFR＞, AFL＞ terminal is 3.0 V fixed. Therefore, it is impossible to check the A/F sensors (bank1, 2 sensor1) output voltage at the terminals (AFR～, AFL～/ AFR＞, AFL＞) of ECM.

OK:

Condition	A/F Sensor Voltage value
Engine idling	● Not remains at 3.30 V (*0.660 V) ● Not remains at 3.8 V (*0.76 V) or more ● Not remains at 2.8 V (*0.56 V) or less *: When you use the OBDII scan tool (excluding TOYOTA hand–held tester)
Engine racing	
Driving at engine speed 1,500 rpm or more and vehicle speed 40 km/h (25mph) or more, and operate throttle valve open and close	

HINT:

- During fuel enrichment, there is a case that the output voltage of A/F sensors (bank1, 2 sensor1) is below 2.8 V (*0.56 V), it is normal.
- During fuel cut, there is case that the output voltage of A/F sensors (bank1, 2 sensor1) is above 3.8 V (*0.76 V), it is normal.
- If output voltage of A/F sensors (bank1, 2 sensor1) remains at 3.30 V (*0.660 V) even after performing all the above conditions, A/F sensors (bank1, 2 sensor1) circuit may be open.
- If output voltage of A/F sensors (bank1, 2 sensor1) remains at 3.8 V (*0.76 V) or more, or 2.8 V (*0.56 V) or less even after performing all the above conditions, A/F sensors (bank1, 2 sensor1) circuit may be short.

*: When you use the OBDII scan tool (excluding TOYOTA hand–held tester).

OK → **Go to step 9.**

NG

8	Check for open and short in harness and connector between ECM and A/F sensors (bank1, 2 sensor1) (See page IN–31).

NG → Repair or replace harness or connector.

OK →

Replace A/F sensors (bank1, 2 sensor1).

9	perform confirmation driving pattern (See page DI–340).

Go →

10	Is there DTC P0171 or P0172 being output again ?

YES → Check and replace ECM (See page IN–31).

NO →

11	Did vehicle runs out of fuel in the past ?

NO → Check for intermittent problems (See page DI–197).

YES →

DTC P0171 or P0172 is caused by running out of fuel.

DTC	P0171	System too Lean (Fuel Trim) (Except California Spec.)

DTC	P0172	System too Rich (Fuel Trim) (Except California Spec.)

CIRCUIT DESCRIPTION

Fuel trim refers to the feedback compensation value compared against the basic injection time. Fuel trim includes short–term fuel trim and long–term fuel trim.

Short–term fuel trim is the short–term fuel compensation used to maintain the air–fuel ratio at its ideal theoretical value. The signal from the heated oxygen sensor indicates whether the air–fuel ratio is RICH or LEAN compared to the ideal theoretical value, triggering a reduction in fuel volume if the air–fuel ratio is rich, and an increase in fuel volume if it is lean.

Long–term fuel trim is overall fuel compensation carried out long–term to compensate for continual deviation of the short–term fuel trim from the central value due to individual engine differences, wear over time and changes in the usage environment.

If both the short–term fuel trim and long–term fuel trim are LEAN or RICH beyond a certain value, it is detected as a malfunction and the MIL lights up.

DTC No.	DTC Detecting Condition	Trouble Area
P0171	When air fuel ratio feedback is stable after engine warming up, fuel trim is considerably in error on RICH side (2 trip detection logic)	●Air intake (hose loose) ●Fuel line pressure ●Injector blockage ●Heated oxygen sensors (bank 1, 2 sensor 1) malfunction ●Mass air flow meter ●Engine coolant temp. sensor ●Gas leakage on exhaust system
P0172	When air fuel ratio feedback is stable after engine warming up, fuel trim is considerably in error on LEAN side (2 trip detection logic)	●Fuel line pressure ●Injector leak, blockage ●Heated oxygen sensors (bank 1, 2 sensor 1) malfunction ●Mass air flow meter ●Engine coolant temp. sensor ●Gas leakage on exhaust system

HINT:

- When DTC P0171 is recorded, the actual air–fuel ratio is on the LEAN side. When DTC P0172 is recorded, the actual air–fuel ratio is on the RICH side.
- If the vehicle runs out of fuel, the air–fuel ratio is LEAN and DTC P0171 is recorded. The MIL then comes on.
- If the total of the short–term fuel trim value and long–term fuel trim value is within ± 35 % (80˚C (176˚F) or more), the system is functioning normally.

INSPECTION PROCEDURE

HINT:

Read freeze frame data using TOYOTA hand–held tester or OBD II scan tool. Because freeze frame records the engine conditions when the malfunction is detected, when troubleshooting it is useful for determining whether the vehicle was running or stopped, the engine warmed up or not, the air–fuel ratio lean or rich, etc. at the time of the malfunction.

1	Check air induction system (See page SF–1).

NG → Repair or replace.

OK

2	Check injector injection (See page SF–21).

NG → Replace injector.

OK

3	Check mass air flow meter and engine coolant temp. sensor (See pages SF–35 and SF–63).

NG → Repair or replace.

OK

4	Check for spark and ignition (See page IG–1).

NG → Repair or replace.

OK

5	Check fuel pressure (See page SF–6).

NG → Check and repair fuel pump, pressure regulator, fuel pipe line and filter.

OK

6	**Check gas leakage on exhaust system.**

NG → **Repair or replace.**

OK

7	**Check the output voltage of heated oxygen sensors (bank1, 2 sensor1) during idling.**

PREPARATION:
Warm up the heated oxygen sensors (bank1, 2 sensor1) the engine at 2,500 rpm for approx. 90 sec.
CHECK:
Use the OBDII scan tool or TOYOTA hand–held tester to read the output voltage of the heated oxygen sensors (bank1, 2 sensor1) during idling.
OK:
Heated oxygen sensors (bank1, 2 sensor1) output voltage:
Alternates repeatedly between less than 0.4 V and more than 0.55 V (See the Following table).

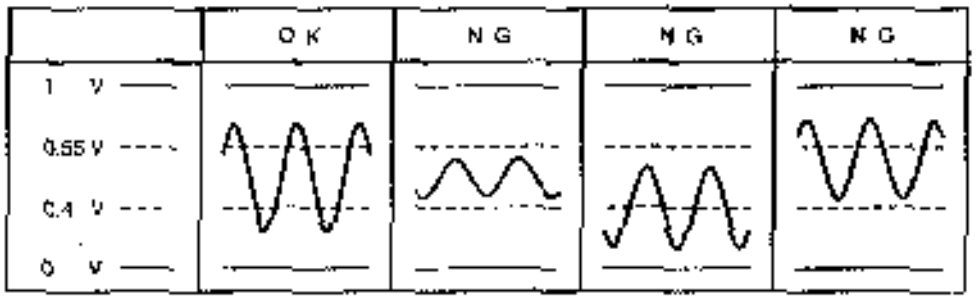

P18349

OK → **Go to step 9.**

NG

8	Check for open and short in harness and connector between ECM and heated oxygen sensors (bank1, 2 sensor1) (See page SF–71).

NG → Repair or replace harness or connector.

OK →

Replace heated oxygen sensors (bank1, 2 sensor1).

9	Perform confirmation driving pattern (See page DI–255).

Go →

10	Is there DTC P0171 or P0172 being output again ?

YES → Check and replace ECM.

NO →

11	Did vehicle runs out of fuel in the past ?

NO → Check for intermittent problems.

YES →

DTC P0171 or P0172 is caused by running out of fuel.

DI07S–07

DTC	P0300	Random/Multiple Cylinder Misfire Detected

DTC	P0301	Cylinder 1 Misfire Detected

DTC	P0302	Cylinder 2 Misfire Detected

DTC	P0303	Cylinder 3 Misfire Detected

DTC	P0304	Cylinder 4 Misfire Detected

DTC	P0305	Cylinder 5 Misfire Detected

DTC	P0306	Cylinder 6 Misfire Detected

CIRCUIT DESCRIPTION

Misfire: The ECM uses the crankshaft position sensor and camshaft position sensor to monitor changes in the crankshaft rotation for each cylinder.

The ECM counts the number of times the engine speed change rate indicates that misfire has occurred. When the misfire rate equals or exceeds the count indicating that the engine condition has deteriorated, the MIL lights up.

If the misfire rate is high enough and the driving conditions will cause catalyst overheating, the MIL blinks when misfiring occurs.

DTC No.	DTC Detecting Condition	Trouble Area
P0300	Misfiring of random cylinders is detected during any particular 200 or 1,000 revolutions	●Ignition system ●Injector ●Fuel line pressure ●EGR ●Compression pressure ●Valve clearance not to specification ●Valve timing ●Mass air flow meter ●Engine coolant temp. sensor ●Open or short in engine wire ●Connector connection ●ECM
P0301 P0302 P0303 P0304 P0305 P0306	For any particular 200 revolutions for engine, misfiring is detected which can cause catalyst overheating (This causes MIL to blink)	
	For any particular 1,000 revolutions of engine, misfiring is detected which causes a deterioration in emission (2 trip detection logic)	

HINT:
When the 2 or more codes for a misfiring cylinder are recorded repeatedly but no Random Misfire code is recorded, it indicates that the misfires were detected and recorded at different times.

WIRING DIAGRAM

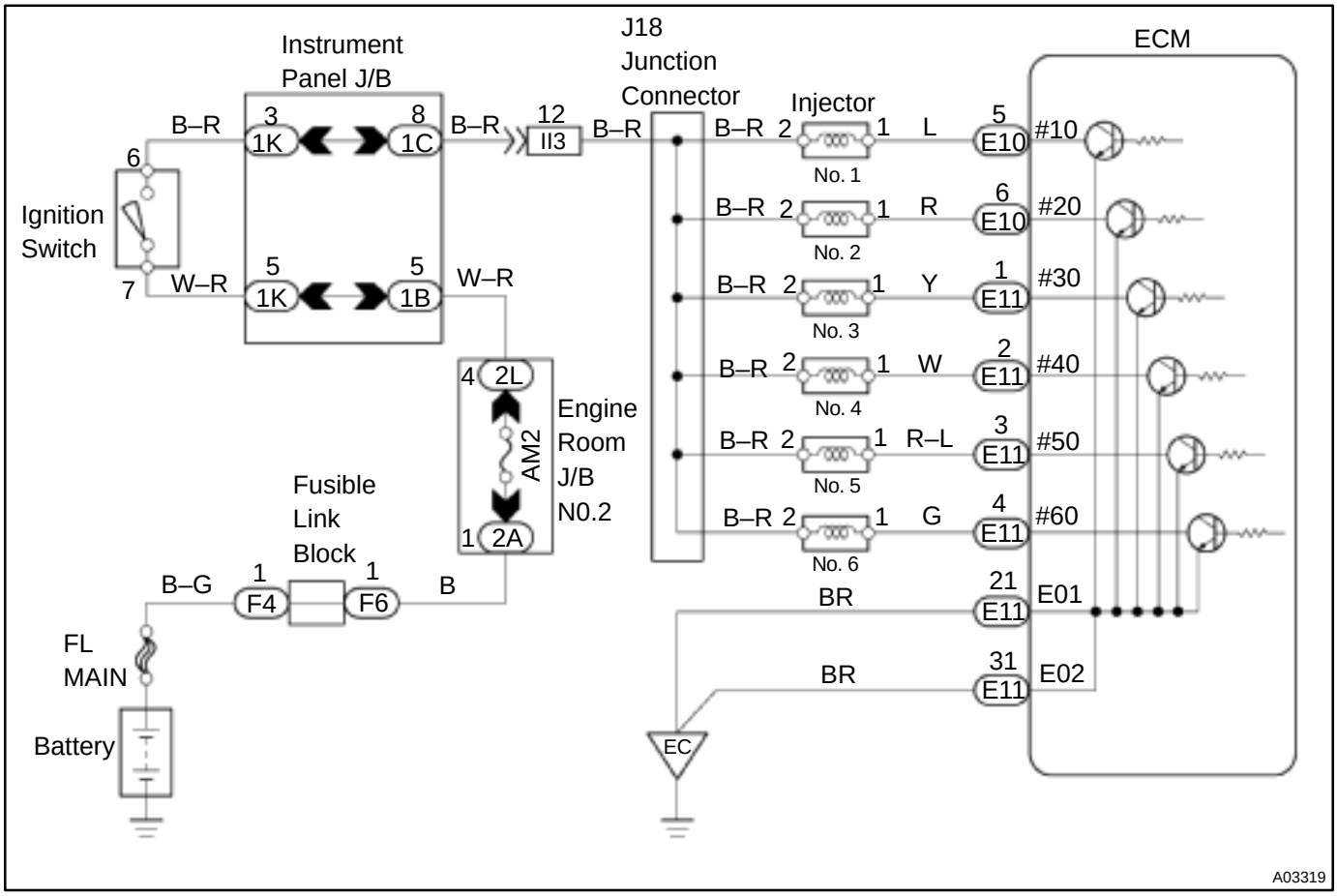

CONFIRMATION DRIVING PATTERN

(1) Connect the TOYOTA hand–held tester or OBD II scan tool.
(2) Record DTC and the freeze frame data.
(3) Use the TOYOTA hand–held tester to set to Check Mode. (See page DI–197)
(4) Drive the vehicle several times with the engine speed, load and its surrounding range shown with ENGINE SPD, CALC LOAD in the freeze frame data or MISFIRE RPM, MISFIRE LOAD in the data list. If you have no TOYOTA hand–held tester, turn the ignition switch OFF after the symptom is simulated the first time. Then repeat the simulation process again.

HINT:
In order to memorize DTC of misfire, it is necessary to drive around MISFIRE RPM, MISFIRE LOAD in the data list for the following period of time.

Engine Speed	Time
Idling	3 minutes 30 seconds or more
1000 rpm	3 minutes or more
2000 rpm	1 minute 30 seconds or more
3000 rpm	1 minute or more

(5) Check whether there is misfire or not by monitoring DTC and the freeze frame data. After that, record them.
(6) Turn ignition switch OFF and wait at least 5 seconds.

INSPECTION PROCEDURE

HINT:

- If is the case that DTC besides misfire is memorized simultaneously, first perform the troubleshooting for them.
- Read freeze frame data using TOYOTA hand–held tester or OBD II scan tool. Because freeze frame data records the engine conditions when the malfunction is detected, when troubleshooting it is useful for determining whether the vehicle was running or stopped, the engine warmed up or not, the air–fuel ratio lean or rich, etc. at the time of the malfunction.
- When the vehicle is brought to the workshop and the misfire is not occurred, misfire can be confirmed by reproducing the condition or freeze frame data. Also, after finishing the repair, confirm that there is no misfire. (See the confirmation driving pattern)
- When either of SHORT FT #1, LONG FT #1, SHORT FT #2 or LONG FT #2 in the freeze frame data is besides the range of ±20%, there is a possibility that the air–fuel ratio is inclining either to ”rich” (–20% or less) or ”lean” (+20% or more).
- When COOLANT TEMP in the freeze frame data is less than 80˚C (176˚F), there is a possibility or misfire only during warming up.
- In the case that misfire cannot be reproduced, the reason may be because of the driving with lack or fuel, the use of improper fuel, a stain of ignition plug, and etc.

1	**Check wire harness, connector and vacuum hose in engine room.**

CHECK:

(a) Check the connection conditions of wire harness and connector.

(b) Check the disconnection, piping and break of vacuum hose.

NG → **Repair or replace, then confirm that there is no misfire (See the confirmation driving pattern).**

OK

2	Check spark plug and spark of misfiring cylinder.

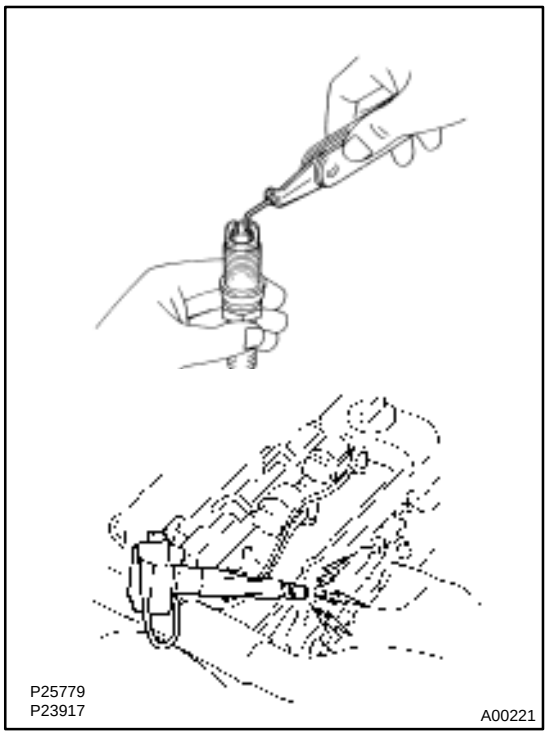

PREPARATION:

(a) Remove the ignition coil (See page IG–7).
(b) Remove the spark plug.

CHECK:

(a) Check spark plug type.
(b) Check for carbon deposits on electrode.
(c) Check electrode gap.

OK:

(a) Twin ground electrodes type.
Recommended spark plug:
ND PK20TR11
NGK BKR6EKPB–11
(b) No large carbon deposit present.
Not wet with gasoline or oil.
(c) Electrode gap:
Standerd: 1.0 – 1.1 mm (0.03937 – 0.043 in.).
Maximum: 1.3 mm (0.051 in.).

PREPARATION:

(a) Install the spark plug to the ignition coil, and connect the ignition coil the connector.
(b) Disconnect injector connector.
(c) Hold the end about 12.5 mm (0.5 in.) from the ground.

CHECK:

Check if spark occurs while engine is being cranked.

NOTICE:

To prevent excess fuel being injected from the injectors during this test, don't crank the engine for more than 5 ~ 10 sec. at a time.

OK:

Spark jumps across electrode gap.

NG → **Replace or check ignition system (See page IG–1).**

OK

3	Check voltage of ECM terminal for injector of failed cylinder.

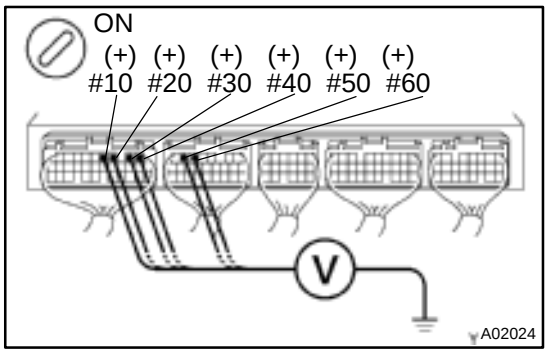

PREPARATION:

(a) Remove the glove compartment (See page SF–73).

(b) Turn the ignition switch ON.

CHECK:

Measure voltage between applicable terminal of the ECM connector and body ground.

OK:

Voltage: 9 ~ 14 V

Reference INSPECTION USING OSCILLOSCOPE

INJECTOR SIGNAL WAVEFORM

With the engine idling, measure between terminals #10 ~ #60 and E01 of ECM.

HINT:

The correct waveform is as shown.

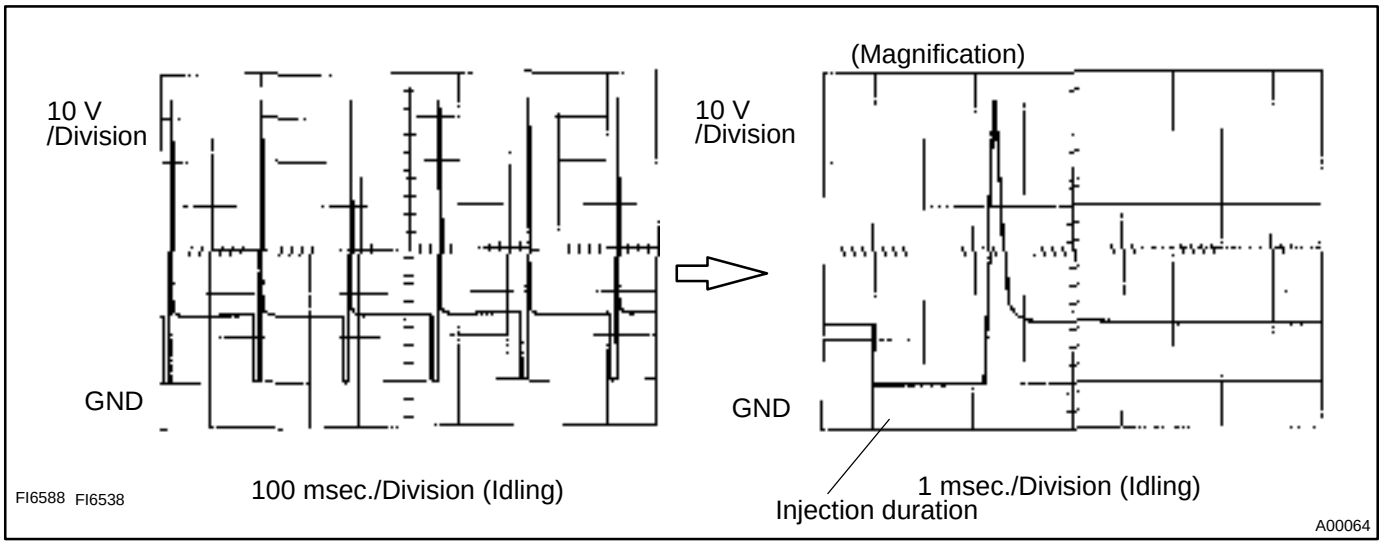

OK	Go to step 5.

NG

4	Check resistance of injector of misfiring cylinder (See page SF–21).

NG → Replace injector.

OK →

Check for open and short in harness and connector between injector and ECM (See page IN–31).

5	Check fuel pressure (See page SF–6).

NG → Check and repair fuel pump, fuel pipe line and filter (See page SF–1).

OK →

6	Check injector injection (See page SF–25).

NG → Replace injector.

OK →

7	Check EGR system (See page EC–11).

NG → Replace EGR system.

OK →

8	**Check mass air flow meter and engine coolant temp. sensor (See pages SF–35, SF–63).**

NG → **Repair or replace.**

OK

Check compression pressure, valve clearance and valve timing.

DI07T–06

DTC	P0325	Knock Sensor 1 Circuit Malfunction

DTC	P0330	Knock Sensor 2 Circuit Malfunction

CIRCUIT DESCRIPTION

Knock sensors are fitted one to the right bank and left bank of the cylinder block to detect engine knocking. This sensor contains a piezoelectric element which generates a voltage when it becomes deformed, which occurs when the cylinder block vibrates due to knocking. If engine knocking occurs, ignition timing is retarded to suppress it.

DTC No.	DTC Detecting Condition	Trouble Area
P0325	No knock sensor 1 signal to ECM with engine speed between 2,000 rpm and 5,600 rpm.	●Open or short in knock sensor 1 circuit ●Knock sensor 1 (looseness) ●ECM
P0330	No knock sensor 2 signal to ECM with engine speed between 2,000 rpm and 5,600 rpm.	●Open or short in knock sensor 2 circuit ●Knock sensor 2 (looseness) ●ECM

If the ECM detects the above diagnosis conditions, it operates the fail–safe function in which the corrective retard angle value is set to the maximum value.

WIRING DIAGRAM

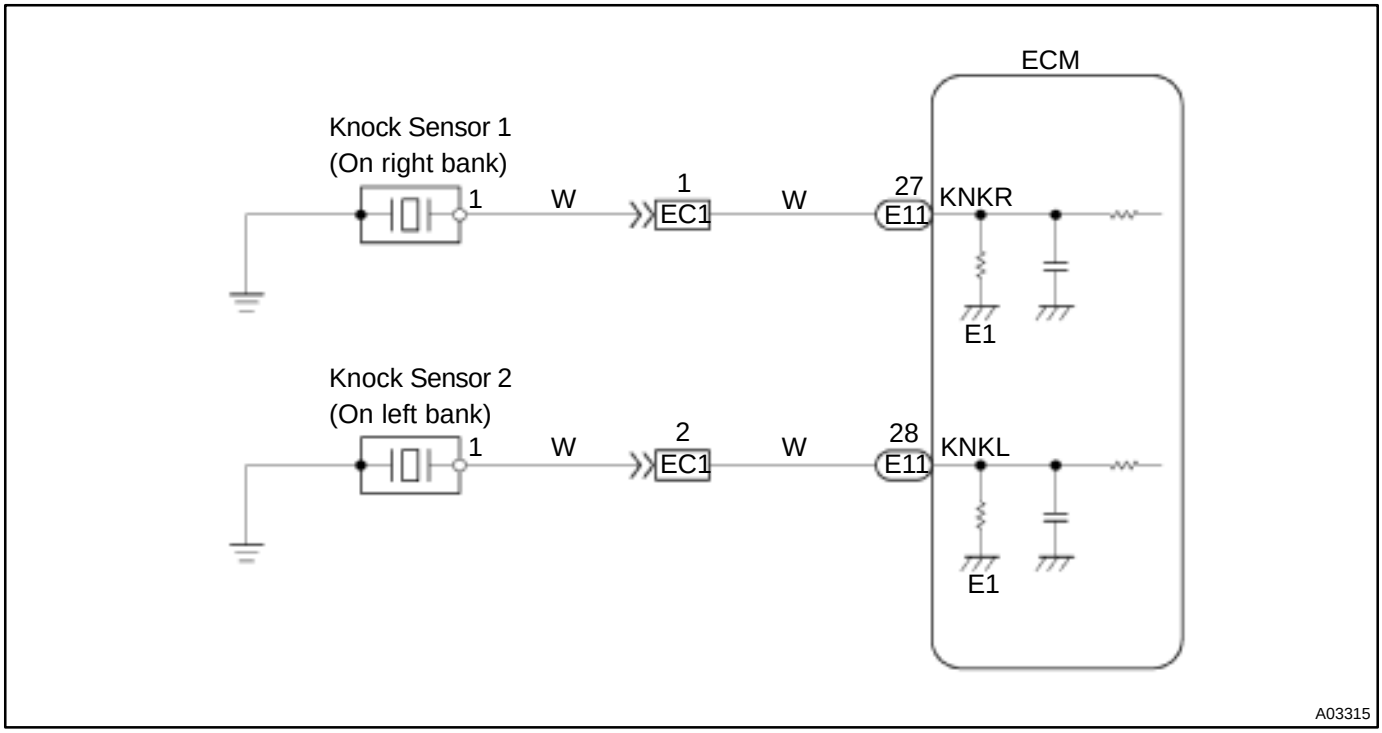

INSPECTION PROCEDURE

HINT:

- DTC P0325 is for the right bank knock sensor circuit. DTC P0330 is for the left bank knock sensor circuit.
- Read freeze frame data using TOYOTA hand–held tester or OBD II scan tool. Because freeze frame records the engine conditions when the malfunction is detected, when troubleshooting it is useful for determining whether the vehicle was running or stopped, the engine warmed up or not, the air–fuel ratio lean or rich, etc. at the time of the malfunction.

1	**Connect OBD II scan tool or TOYOTA hand–held tester, and check knock sensor circuit.**

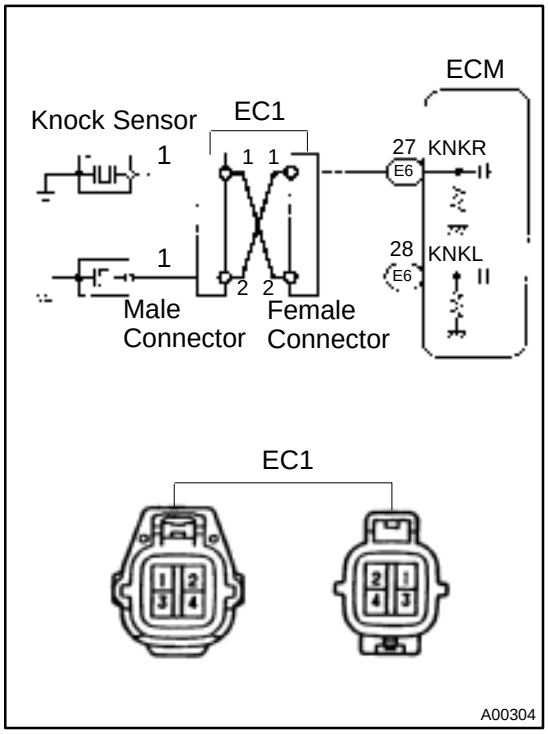

PREPARATION:

(a) Connect the OBD II scan tool or TOYOTA hand–held tester to the DLC3.

(b) Disconnect the wire to wire connector EC1.

(c) Connect the terminals of the disconnected EC1 male connector and EC1 female as follows.

Male connector ↔ Female connector
Terminal 1 ↔ Terminal 2
Terminal 2 ↔ Terminal 1

(d) Turn the ignition switch ON and push the OBD II scan tool or TOYOTA hand–held tester main switch ON.

(e) After the engine is warmed up, perform quick racing to 4,000 rpm three times.

CHECK:

Check the DTC.

RESULT:

Type I	DTC same as when vehicle brought in. P0325 → P0325 or P0330 → P0330
Type II	DTC different to when vehicle brought in. P0325 → P0330 or P0330 → P0325

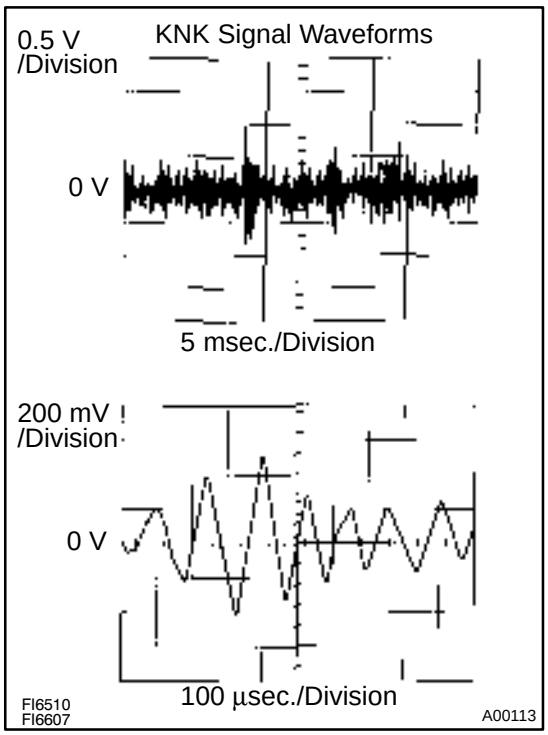

Reference INSPECTION USING OSCILLOSCOPE

- With the engine racing (4,000 rpm), measure between terminals KNKR, KNKL of the ECM connector and body ground.

HINT:
The correct waveforms are as shown.

- Spread the time on the horizontal axis, and confirm that period of the wave is 141 µsec.
  (Normal mode vibration frequency of knock sensor: 7.1 kHz)

HINT:
If normal mode vibration frequency is not 7.1 kHz, the sensor is malfunctioning.

Type II → **Go to step 3 .**

Type I

2	**Check for open and short in harness and connector between EC1 connector and ECM (See page IN–31).**

NG → **Repair or replace harness or connector.**

OK

Check and replace ECM (See page IN–31).

3	**Check for open and short in harness and connector between EC1 connector and knock sensor (See page IN–31).**

HINT:

- If DTC P0325 has changed to P0330, check the knock sensor circuit on the right bank side.
- If DTC P0330 has changed to P0325, check the knock sensor circuit on the left bank side.

NG → **Repair or replace harness or connector.**

OK

Replace knock sensor.

DI07U–06

DTC	P0335	Crankshaft Position Sensor ”A” Circuit Malfunction

CIRCUIT DESCRIPTION

Crankshaft position sensor (NE signal) consists of a signal plate and pickup coil.
The NE signal plate has 34 teeth and is mounted on the crankshaft. The NE signal sensor generates 34 signals for every engine revolution. The ECM detects the standard crankshaft angle based on the G22 signals, and the actual crankshaft angle and the engine speed by the NE signals.

DTC No.	DTC Detecting Condition	Trouble Area
P0335	No crankshaft position sensor signal to ECM during cranking (2 trip detection logic)	●Open or short in crankshaft position sensor circuit ●Crankshaft position sensor ●Starter ●ECM
	No crankshaft position sensor signal to ECM with engine speed 600 rpm or more (2 trip detection logic)	

WIRING DIAGRAM

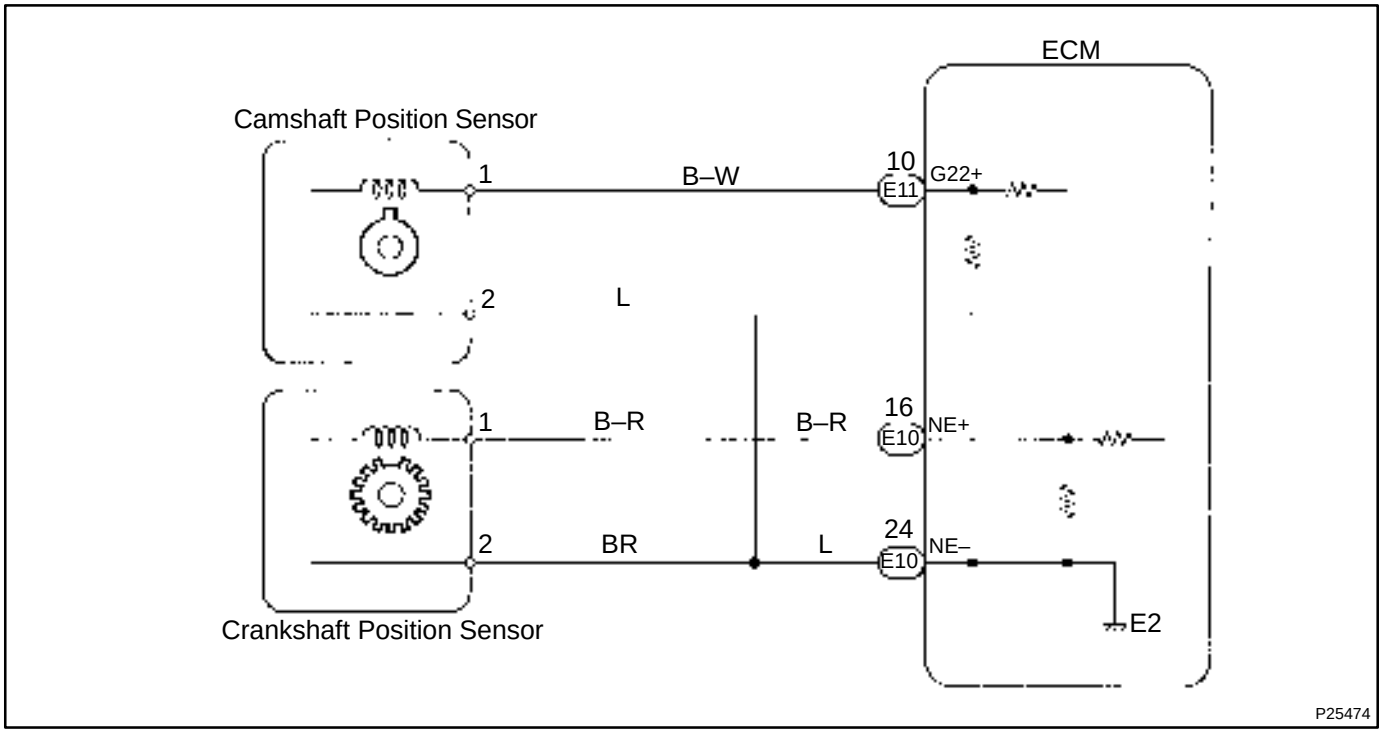

INSPECTION PROCEDURE

HINT:

- Perform troubleshooting of DTC P0335 first. If no trouble is found, troubleshoot the following mechanical systems.
- Read freeze frame data using TOYOTA hand–held tester or OBD II scan tool. because freeze frame records the engine conditions when the malfunction is detected, when troubleshooting it is useful for determining whether the vehicle was running or stopped, the engine warmed up or not, the air–fuel ratio lean or rich, etc. at the time of the malfunction.

1	**Check resistance of crankshaft position sensor (See page IG–12).**

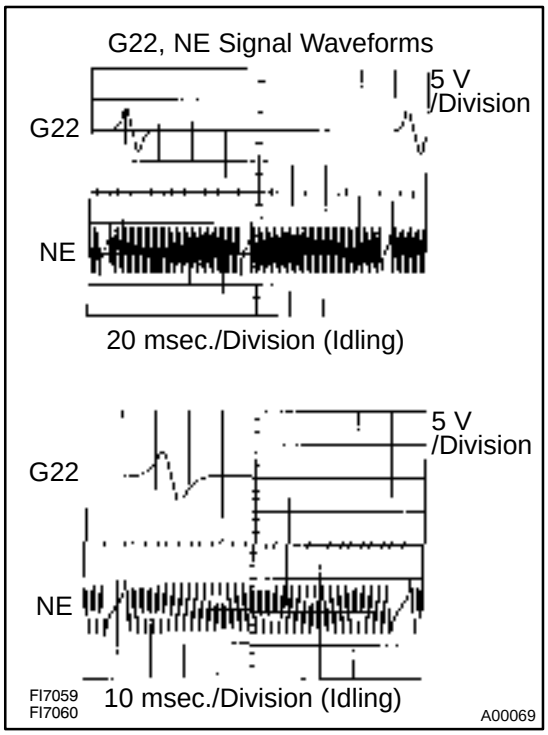

Reference INSPECTION USING OSCILLOSCOPE

During cranking or idling, check between terminals G22+ and NE–, NE and NE– of the ECM connector.

HINT:

The correct waveforms are as shown.

NG	**Replace crankshaft position sensor.**

OK

2	**Check for open and short in harness and connector between ECM and crankshaft position sensor (See page IN–31).**

NG	**Repair or replace harness or connector.**

OK

3	**Inspect sensor installation and teeth of crankshaft timing pulley.**

NG → **Tighten the sensor.**
Replace crankshaft timing pulley.

OK

Check and replace ECM
(See page IN–31).

DTC	P0340	Camshaft Position Sensor Circuit Malfunction

CIRCUIT DESCRIPTION

Camshaft position sensor (G22 signal) consist of a signal plate and pickup coil.
The G22 signal plate has one tooth, on its outer circumference and is mounted on the left bank camshafts. When the camshafts rotate, the protrusion on the signal plate and the air gap on the pickup coil change, causing fluctuations in the magnetic field and generating an electromotive force in the pickup coil.
The NE signal plate has 34 teeth and is mounted on the crankshaft. The NE signal sensor generates 34 signals for every engine revolution. The ECM detects the standard crankshaft angle based on the G22 signal and the actual crankshaft angle and the engine speed by the NE signals.

DTC No.	DTC Detecting Condition	Trouble Area
P0340	No camshaft position sensor signal to ECM during cranking (2 trip detection logic)	●Open or short in camshaft position sensor circuit ●Camshaft position sensor ●Starter ●ECM
	No camshaft position sensor signal to ECM with engine speed 600 rpm or more	

WIRING DIAGRAM

Refer to DTC P0335 (Crankshaft Position Sensor ”A” Circuit Malfunction) on page DI–287 .

INSPECTION PROCEDURE

HINT:
Read freeze frame data using TOYOTA hand–held tester or OBD II scan tool. Because freeze frame records the engine conditions when the malfunction is detected, when troubleshooting it is useful for determining whether the vehicle was running or stopped, the engine warmed up or not, the air–fuel ratio lean or rich, etc. at the time of the malfunction.

1	**Check resistance of camshaft position sensor (See page IG–1).**

Reference INSPECTION USING OSCILLOSCOPE
Refer to DTC P0335 on page DI–287.

NG → **Replace camshaft position sensor.**

OK

2	Check for open and short in harness and connector between ECM and camshaft position sensor (See page IN–31).

NG → Repair or replace harness or connector.

OK

3	Inspect sensor installation and tooth of left bank camshaft timing pulley.

NG → Tighten the sensor.
Replace left bank camshaft timing pulley.

OK

Check and replace ECM (See page IN–31).

DTC	P0401	Exhaust Gas Recirculation Flow Insufficient Detected (Ex CA Spec.)

CIRCUIT DESCRIPTION

The EGR system recirculates exhaust gas, which is controlled to the proper quantity to suit the driving conditions, into the intake air mixture to slow down combustion, reduce the combustion temperature and reduce NOx emissions.

The lift amount of EGR valve is controlled by the vacuum which is regulated by the Duty–VSV operated by the ECM. The lift amount of EGR valve is detected by the EGR valve position sensor which is mounted on the EGR valve and it provides feedback to the ECM to control the lift amount of EGR valve in response to engine operating conditions.

Under the following conditions, EGR is cut to maintain driveability.

- Before the engine is warmed up
- During deceleration (throttle valve closed)
- Light engine load (amount of intake air very small)
- Engine speed over 4,000 rpm
- Engine idling

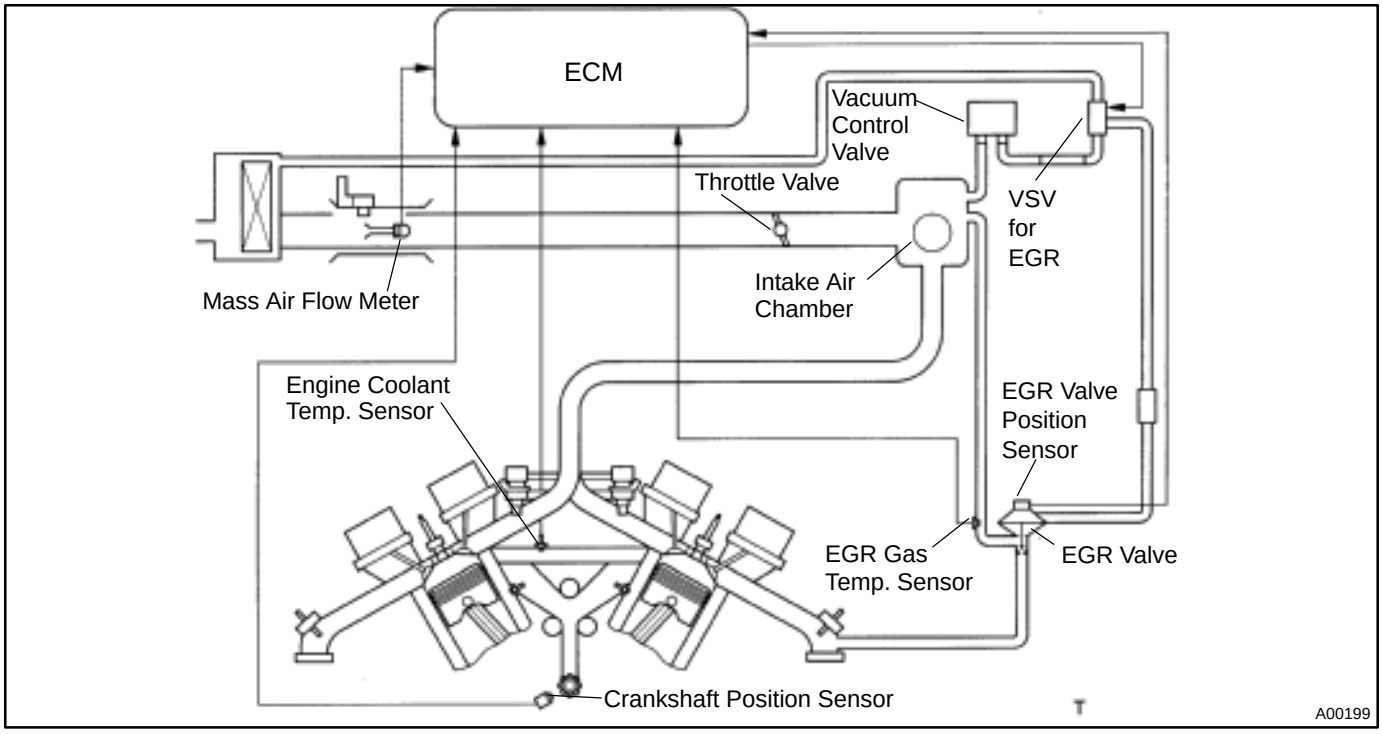

DTC No.	DTC Detecting Condition	Trouble Area
P0401	After engine is warmed up and run at 80 km/h (50 mph) for 3 to 5 min. EGR gas temperature sensor valve does not exceed 35˚C (95˚F) above ambient air temperature (2 trip detection logic)	●EGR valve (stuck closed) ●Open or short in EGR gas temp. sensor circuit ●EGR gas temp. sensor ●Open in VSV circuit for EGR ●VSV for EGR ●Vacuum control valve ●Vacuum hose disconnected or blocked ●ECM

WIRING DIAGRAM

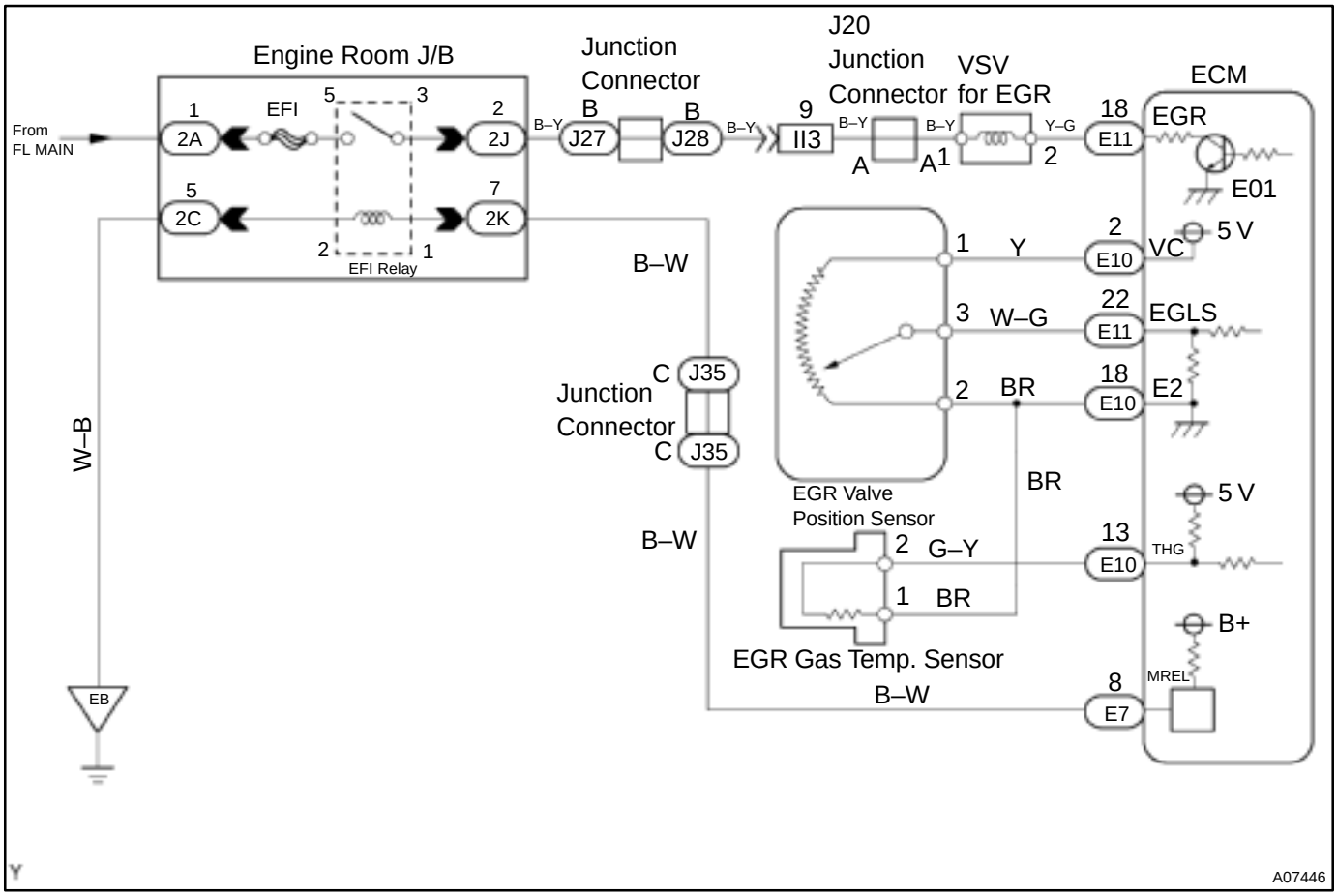

SYSTEM CHECK DRIVING PATTERN

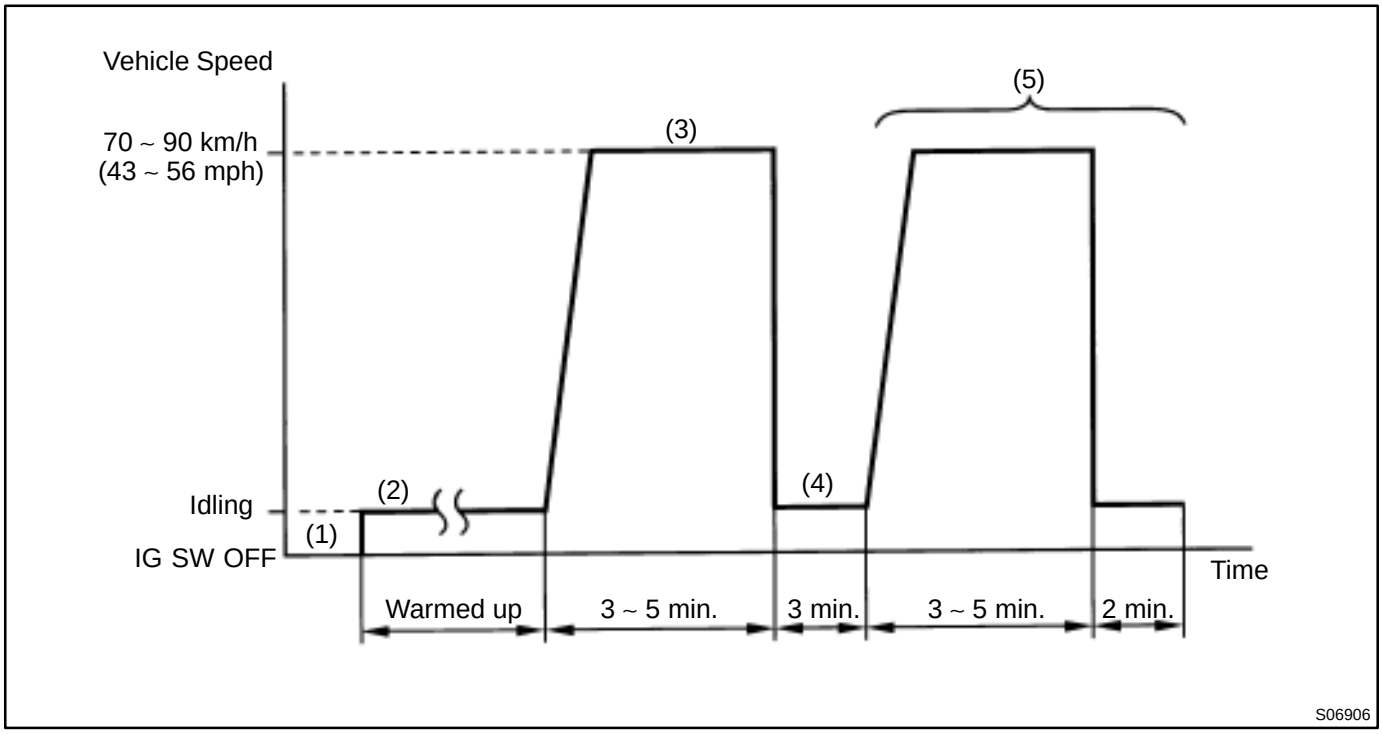

(1) Connect the OBD II scan tool or TOYOTA hand–held tester to the DLC3.
(2) Start and warm up the engine with all accessories switched OFF.
(3) Run the vehicle at 70 ~ 90 km/h (43 ~ 56 mph) for 3 min. or more.
(4) Idle the engine for about 2 min.
(5) Do steps (3) and (4) again.
(6) Stop at safe place and turn the ignition switch OFF.
(7) Do step (2) to (5) again.
(8) Check the READINESS TESTS mode on the OBD II scan tool or TOYOTA hand–held tester.
If COMPL is displayed and the MIL does not light up, the system is normal.
If INCMPL is displayed and the MIL does not light up, run the vehicle steps (2) to (6) from some times and check it.
HINT:
INCMPL is displayed when either condition (a) or (b) exists.
(a) The system check is incomplete.
(b) There is a malfunction in the system.
If there is a malfunction in the system, the MIL light up after step (7) above is done.
(2trip detection logic)

INSPECTION PROCEDURE

HINT:
Read freeze frame data using TOYOTA hand–held tester or OBD II scan tool. Because freeze frame records the engine conditions when the malfunction is detected, when troubleshooting it is useful for determining whether the vehicle was running or stopped, the engine warmed up or not, the air–fuel ratio lean or rich, etc. at the time of the malfunction.

TOYOTA hand–held tester

1	**Connect TOYOTA hand–held tester, and read value of EGR gas temperature.**

PREPARATION:
(a) Connect the TOYOTA hand–held tester to the DLC3.
(b) Warm up the engine.
CHECK:
Read EGR gas temperature on TOYOTA hand–held tester during idling.
OK:
EGR gas temperature : 5°C (41°F) ~ 150°C (302°F) (Not immediately after driving)
HINT:
If there is an open circuit, TOYOTA hand–held tester indicates 3.1°C (37.6°F).
If there is an short circuit, TOYOTA hand–held tester indicates 159.3°C (318.7°F).

OK → **Go to step 4.**

NG

2	Check for open or short in harness or ECM.

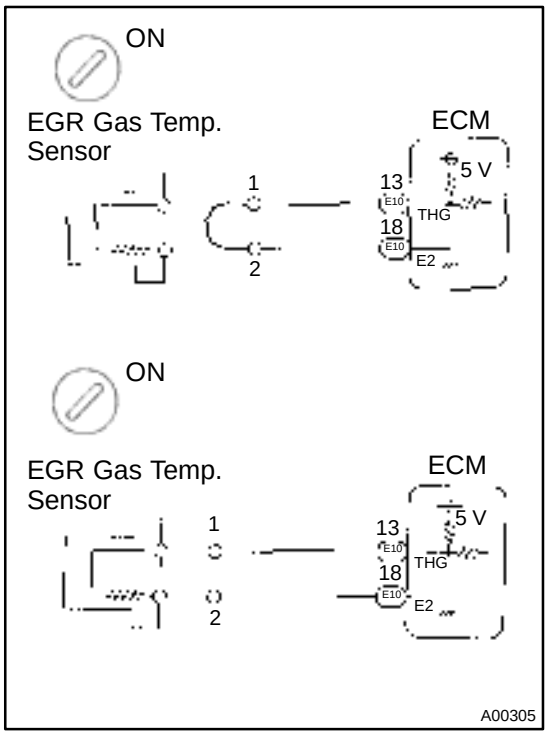

For open circuit

PREPARATION:

(a) Disconnect the EGR gas temp. sensor connector.
(b) Connect the sensor wire harness terminals together.
(c) Turn the ignition switch ON.

CHECK:

Read EGR gas temperature on the TOYOTA hand–held tester.

OK:

EGR gas temperature : 159.3°C (318.7°F)

For short circuit

PREPARATION:

Disconnect the EGR gas temp. sensor connector.

CHECK:

Read EGR gas temperature on the TOYOTA hand–held tester.

OK:

EGR gas temp. : 3.1°C (37.6°F)

OK	Confirm good connection at sensor. If OK, check and replace EGR gas temp. sensor.

NG

3	Check for open or short in harness or ECM.

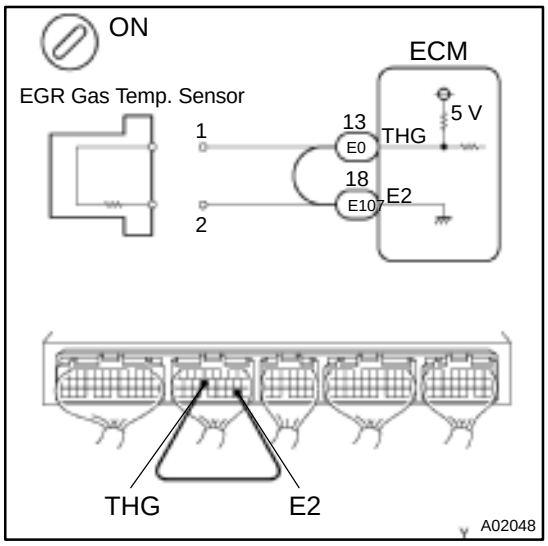

For open circuit

PREPARATION:

(a) Remove the glove compartment (See page SF–73).

(b) Connect between terminals THG and E2 of the ECM connectors.

HINT:

EGR gas temp. sensor connector is disconnected. Before checking, do a visual check and contact pressure check for the ECM connector (See page IN–31).

CHECK:

Read EGR gas temperature on the TOYOTA hand–held tester.

OK:

EGR gas temperature : 159.3°C (318.7°F)

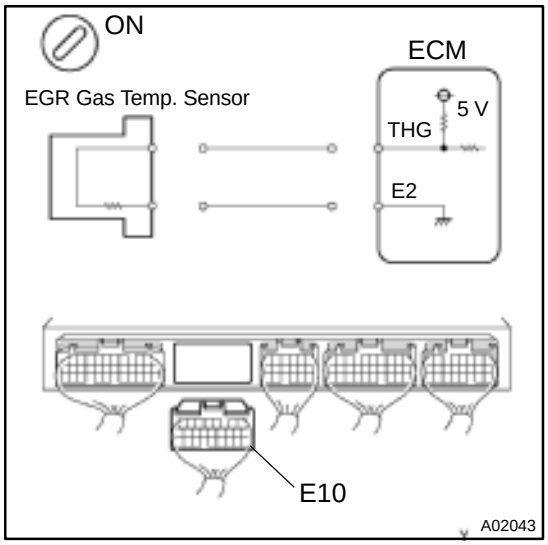

For short circuit

PREPARATION:

(a) Remove the glove compartment (See page SF–73).

(b) Disconnect the E10 connector of ECM.

CHECK:

Read EGR gas temperature on the TOYOTA hand–held tester.

OK:

EGR gas temperature: 3.1°C (37.6°F)

OK	Repair or replace harness.

NG

Confirm connection at ECM.
If OK, check and replace ECM.

4	**Check connection and blockage of vacuum hose (See page EC–2).**

NG → **Repair or replace vacuum hose.**

OK

5	**Check VSV for EGR.**

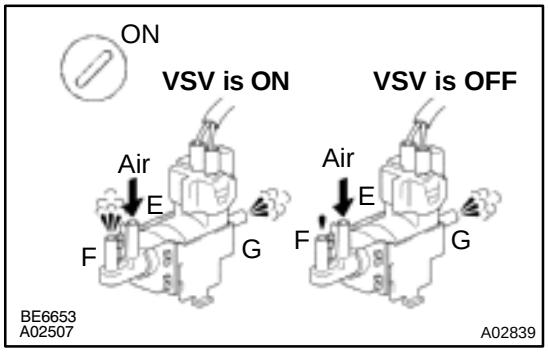

PREPARATION:

Select the ACTIVE TEST mode on the TOYOTA hand–held tester.

CHECK:

Check operation VSV, when it is operated by the TOYOTA hand–held tester.

OK:

VSV is ON:
Air from pipe E is flowing out through pipe F and G.
VSV is OFF:
Air from pipe E is flowing out through pipe G.

OK → **Go to step 8.**

NG

6	**Check operation of VSV for EGR (See page SF–56).**

NG → **Replace VSV for EGR.**

OK

Check for open in harness and connector between engine room J/B and ECM.

7	**Check EGR system (See page EC–11).**

NG → **Repair or replace.**

OK

8	**Check EGR valve.**

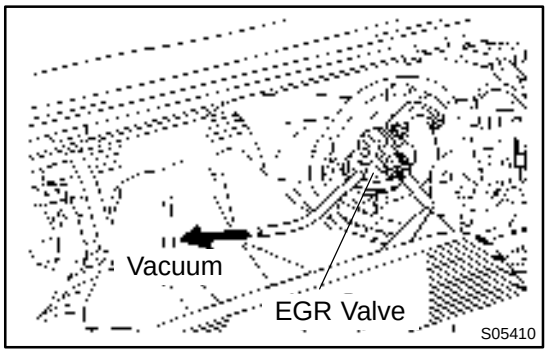

PREPARATION:
(a) Disconnect the vacuum hose from EGR valve.
(b) Start the engine.

CHECK:
Check whether the engine stall when apply vacuum to EGR valve.

OK:
Engine runs rough or stall.

NG → **Repair or replace EGR valve.**

OK

9	**Check vacuum control valve (See page EC–11).**

NG → **Replace vacuum control valve.**

OK

Check and replace ECM (See page IN–31).

OBDII scan tool (excluding TOYOTA hand–held tester)

1	**Check resistance of EGR gas temp. sensor.**

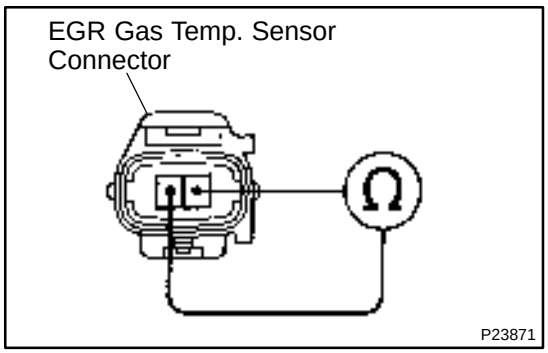

PREPARATION:
Disconnect the EGR gas temp. sensor connector.
CHECK:
Measure resistance between terminals of the EGR gas temp. sensor connector.
OK:
Resistance: 2.5 kΩ ~ 600 kΩ
(Not immediately after driving)
HINT:
If there is open circuit, ohmmeter indicates 720 kΩ or more.
If there is short circuit, ohmmeter indicates 200 Ω or less.

NG → **Replace EGR gas temp. sensor.**

OK ↓

2	**Check for open and short in harness and connector between EGR gas temp. sensor and ECM (See page IN–31).**

NG → **Repair or replace harness or connector.**

OK ↓

3	**Check connection and blockage of vacuum hose (See page EC–2).**

NG → **Repair or replace vacuum hose.**

OK ↓

4	Check VSV for EGR.

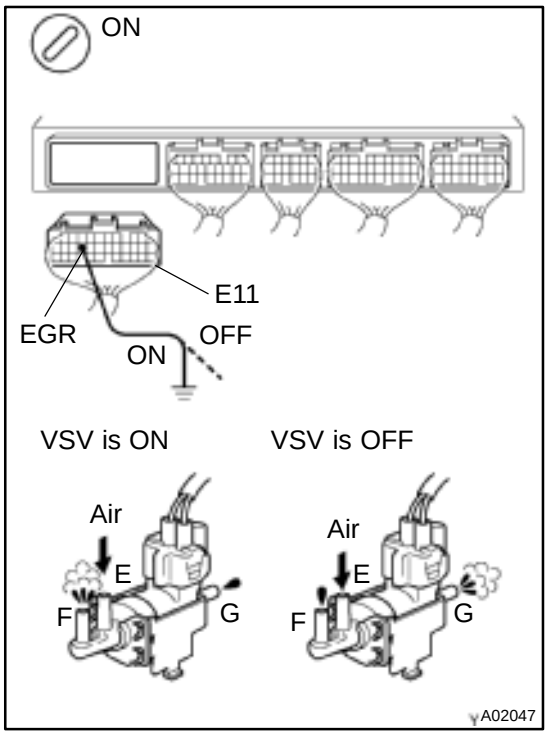

PREPARATION:

(a) Remove the glove compartment (See page SF–73).
(b) Disconnect the E11 connector of ECM.
(c) Turn the ignition switch ON.

CHECK:

Check VSV function.

(1) Connect between terminal EGR of the ECM and body ground (VSV is ON).
(2) Disconnect between terminal EGR of the ECM and body ground (VSV is OFF).

OK:

(1) VSV is ON:
Air from pipe E flows out through pipe F.
(2) VSV is OFF:
Air from pipe E flows out through pipe G.

OK	Go to step 7.

NG

5	Check operation of VSV for EGR (See page SF–56).

NG	Replace VSV for EGR.

OK

Check for open in harness and connector between engine room J/B and ECM (See page IN–31).

6	Check EGR system (See page EC–11).

NG	Repair or replace.

OK

7	**Check EGR valve.**

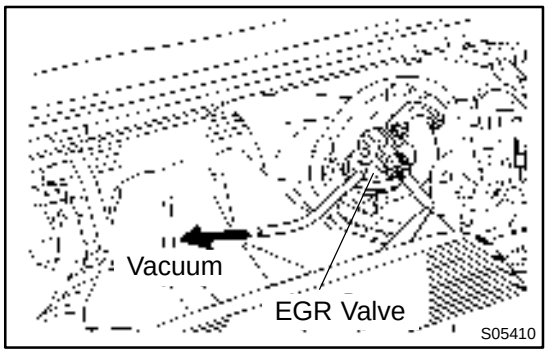

PREPARATION:

(a) Disconnect the vacuum hose from EGR valve.

(b) Start the engine.

CHECK:

Check whether the engine stall when apply vacuum to EGR valve.

OK:

Engine runs rough or stall.

NG → **Repair or replace EGR valve.**

OK

8	**Check vacuum control valve (See page EC–11).**

NG → **Replace vacuum control valve.**

OK

Check and replace ECM (See page IN–31).

DTC	P0402	Exhaust Gas Recirculation Flow Excessive Detected (Ex CA Spec.)

CIRCUIT DESCRIPTION

Refer to DTC P0401 (Exhaust Gas Recirculation Flow Insufficient Detected) on page DI–292.

DTC No.	DTC Detecting Condition	Trouble Area
P0402	When EGR cut–off, lift amount of EGR valve is 2.6 mm (0.1 in.) or more (2 trip detection logic)	●EGR valve stuck open ●VSV for EGR open malfunction ●Short in VSV circuit for EGR ●Open or short in EGR valve position sensor circuit ●EGR valve position sensor ●ECM

See DTC P0401 (Exhaust Gas Recirculation Flow Insufficient Detected) on See page DI–292 for SYSTEM CHECK DRIVING PATTERN and WIRING DIAGRAM.

INSPECTION PROCEDURE

HINT:

Read freeze frame data using TOYOTA hand–held tester or OBD II scan tool. Because freeze frame records the engine conditions when the malfunction is detected, when troubleshooting it is useful for determining whether the vehicle was running or stopped, the engine warmed up or not, the air–fuel ratio lean or rich, etc. at the time of the malfunction.

TOYOTA hand–held tester

1	**Check connection and blockage of vacuum hose.**

NG → **Repair or replace vacuum hose.**

OK

2	**Check VSV for EGR (See page DI–292, step 5).**

OK → **Go to step 4.**

NG

3	Check operation of VSV for EGR (See page SF–56).

NG → Replace VSV for EGR.

OK →

Check for short in harness between VSV for EGR and ECM (See page IN–31).

4	Check EGR valve (See page EC–11).

NG → Repair or replace EGR valve.

OK →

5	Check EGR valve position sensor (See page DI–358).

NG → Repair or replace EGR valve position sensor or harness.

OK →

Check and replace ECM (See page IN–31).

OBDII scan tool (excluding TOYOTA hand–held tester)

1	Check connection and blockage of vacuum hose.

NG → Repair or replace vacuum hose.

OK →

2	Check VSV for EGR (See page DI–292, step 5).

OK → Go to step 4.

NG

3	Check operation of VSV for EGR (See page SF–56).

NG → Replace VSV for EGR.

OK

Check for short in harness between VSV for EGR and ECM (See page IN–31).

4	Check EGR valve (See page EC–11).

NG → Repair or replace EGR valve.

OK

5	Check EGR valve position sensor (See page DI–358).

NG → Repair or replace EGR valve position sensor or harness.

OK

Check and replace ECM (See page IN–31).

DI07Y–06

DTC	P0420	Catalyst System Efficiency Below Threshold (Except California Spec.)

CIRCUIT DESCRIPTION

The ECM compares the waveform of the oxygen sensor located before the catalyst with the waveform of the oxygen sensor located after the catalyst to determine whether or not catalyst performance has deteriorated.

Air–fuel ratio feedback compensation keeps the waveform of the oxygen sensor before the catalyst repeatedly changing back and forth from rich to lean.

If the catalyst is functioning normally, the waveform of the oxygen sensor after the catalyst switches back and forth between rich and lean much more slowly than the waveform of the oxygen sensor before the catalyst.

But when both waveforms change at a similar rate, it indicates that catalyst performance has deteriorated.

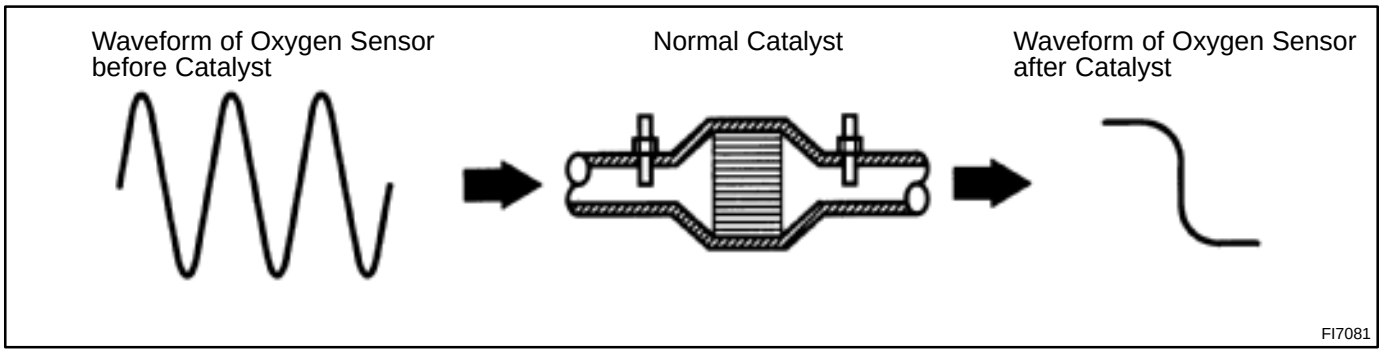

DTC No.	DTC Detecting Condition	Trouble Area
P0420	After engine and catalyst are warmed up, and while vehicle is driven within set vehicle and engine speed range, waveforms of heated oxygen sensors (bank 1 sensor 1, 2) have the same amplitude (2 trip detection logic)	●Three–way catalytic converter ●Open or short in heated oxygen sensor circuit ●Heated oxygen sensor

CONFIRMATION ENGINE RACING PATTERN

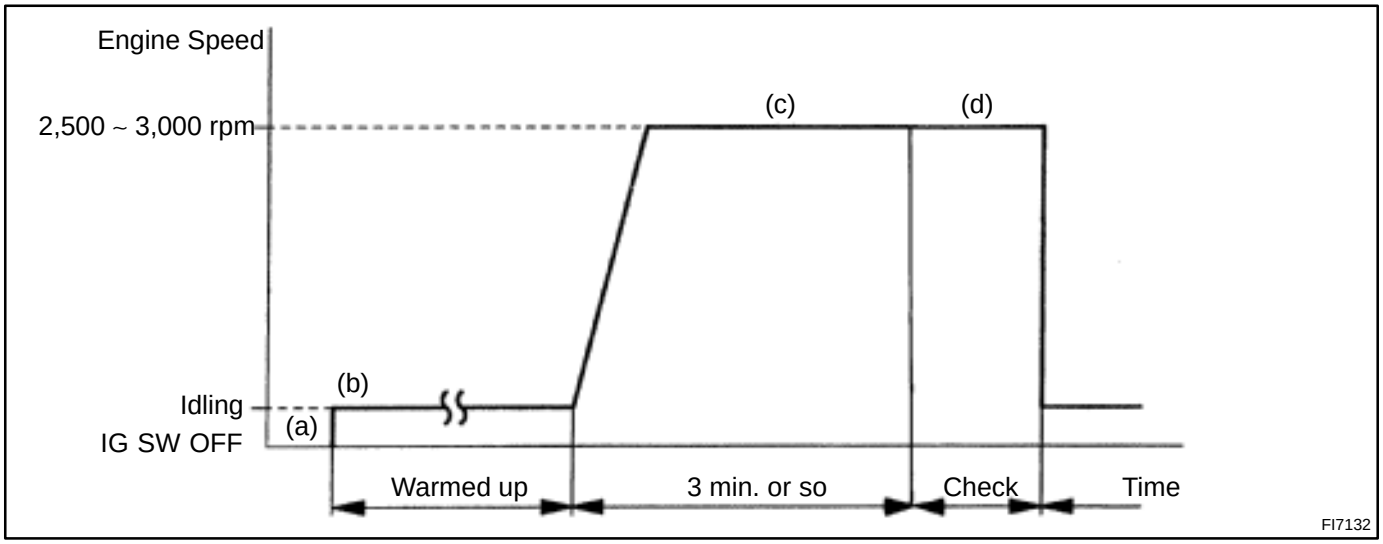

(a) Connect the TOYOTA hand–held tester to the DLC3, or connect the probe of the oscilloscope between terminals OXR1, OXL1, OXS and E1 of the ECM connector.
(b) Start engine and warm it up with all accessories switched OFF until water temp. is stable.
(c) Race the engine at 2,500 ~ 3,000 rpm for about 3 min.
(d) After confirming that the waveform of the heated oxygen sensor, bank 1, 2 sensor 1 (OXR1, OXL1), oscillate around 0.5 V during feedback to the ECM, check the waveform of the heated oxygen sensor, bank 1 sensor 2 (OXS).

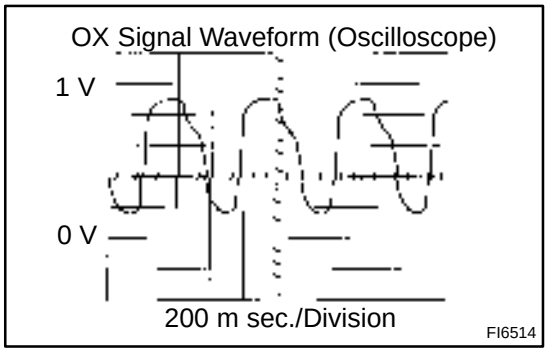

HINT:
If there is a malfunction in the system, the waveform of the heated oxygen sensor, bank 1 sensor 2 (OXS), is almost the same as that of the heated oxygen sensor, bank 1, 2 sensor 1 (OXR1, OXL1), on the left.
There are some cases where, even though a malfunction exists, the MIL may either light up or not light up.

INSPECTION PROCEDURE

HINT:
Read freeze frame data using TOYOTA hand–held theater or OBD II scan tool. Because freeze frame records the engine conditions when the malfunction is detected, when troubleshooting it is useful for determining whether the vehicle was running or stopped, the engine warmed up or not, the air–fuel ratio lean or rich, etc. at the time of the malfunction.

1	**Are there any other codes (besides DTC P0420) being output?**

YES → **Go to relevant DTC chart.**

NO

2	**Check gas leakage on exhaust system.**

NG → **Repair or replace.**

OK

3	Check heated oxygen sensor (bank 1, sensor 1) (See page DI–255).

NG → Repair or replace.

OK

4	Check heated oxygen sensors (bank 1, 2 sensor 2) (See page DI–265).

NG → Repair or replace.

OK

Replace three–way catalytic converter.

DTC	P0420	Catalyst System Efficiency Below Threshold (Only for California Spec.)

CIRCUIT DESCRIPTION

The ECM observes the waveform of the heated oxygen sensor located behind the catalyst to determine whether the catalyst is performance has deteriorated.
If the catalyst is functioning normally, the waveform of the heated oxygen sensor located behind the catalyst switches back and forth between rich and lean much more slowly.
When the waveform of the heated oxygen sensor located behind the catalyst alternates flatteringly between rich and lean, it indicates that catalyst performance has deteriorated.

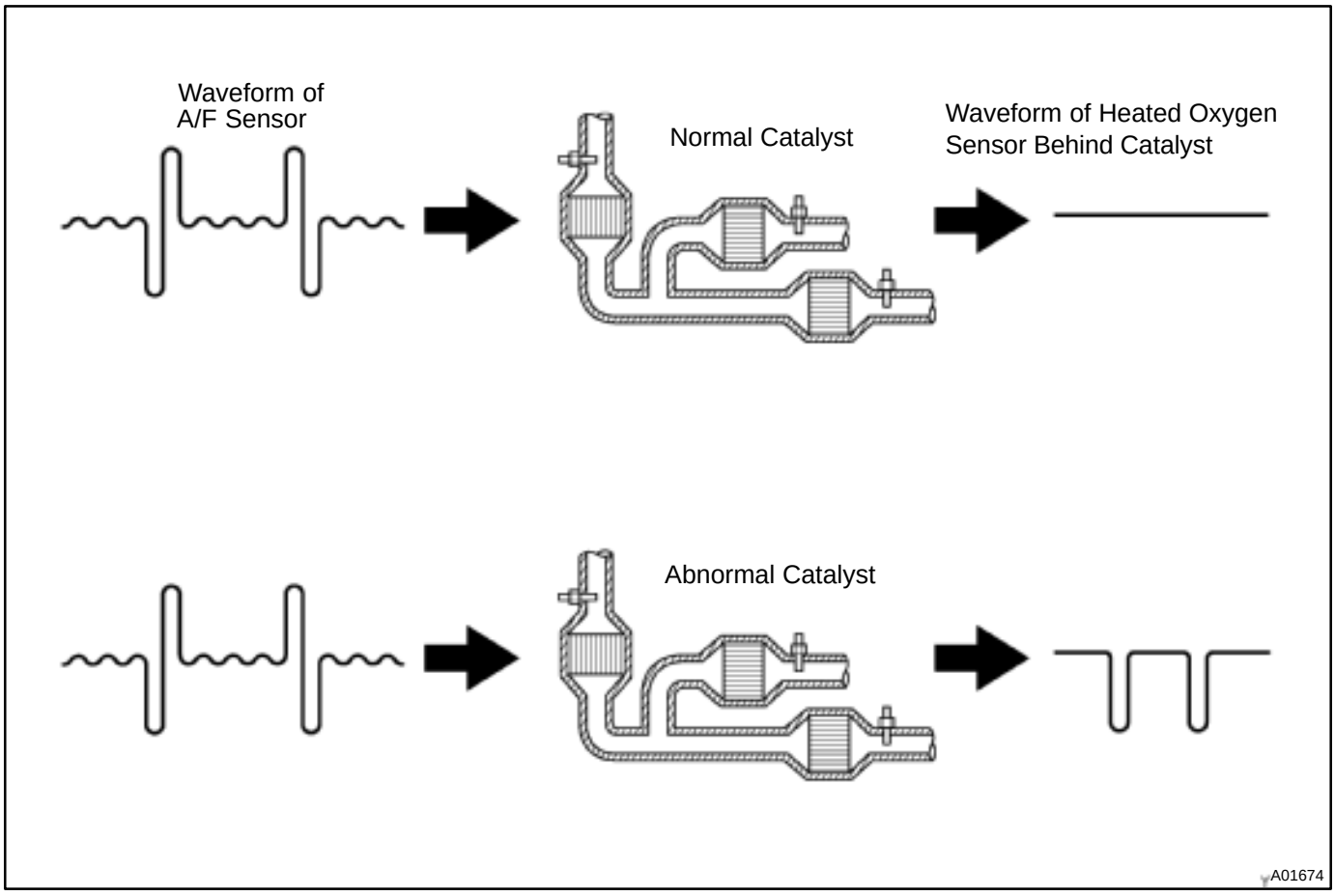

DTC No.	DTC Detecting Condition	Trouble Area
P0420	After engine and catalyst are warmed up, and while vehicle is driven within set vehicle and engine speed range, waveform of heated oxygen sensor (bank 1 sensor 2) alternates flatteringly between rich and lean (2 trip detection logic)	●Three–way catalytic converter ●Open or short in heated oxygen sensor (bank 1 sensor 2) circuit ●Heated oxygen sensor (bank 1 sensor 2) ●Open or short in A/F sensors (bank 1, 2 sensor 1) circuit ●A/F sensors (bank 1, 2 sensor 1)

CONFIRMATION ENGINE RACING PATTERN

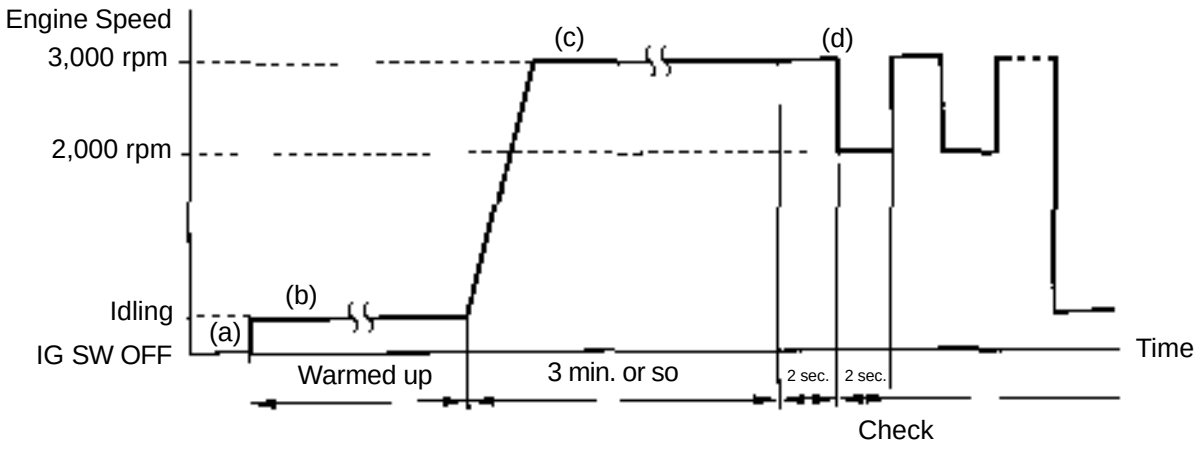

(a) Connect the OBD II scan tool or TOYOTA hand–held tester to the DLC3.
(b) Start engine and warm it up with all accessories switched OFF until water temp. is stable.
(c) Race the engine at 2,500 ~ 3,000 rpm for about 3 min.
(d) When racing the engine at 3,000 rpm for 2 sec. and 2,000 rpm for 2 sec. alternately, check the wave-form of the heated oxygen sensor (bank 1 sensor 2).

INSPECTION PROCEDURE

HINT:
Read freeze frame data using TOYOTA hand–held tester or OBD II scan tool. Because freeze frame records the engine conditions when the malfunction is detected, when troubleshooting it is useful for determining whether the vehicle was running or stopped, the engine warmed up or not, the air–fuel ratio lean or rich, etc. at the time of the malfunction.

1	**Are there any other codes (besides DTC P0420) being output ?**

YES → **Go to relevant DTC chart.**

NO

2	**Check gas leakage on exhaust system.**

NG → **Repair or replace.**

OK

3	Check A/F sensors (bank 1, 2 sensor 1) (See page DI–255).

NG → Repair or replace.

OK

4	Check heated oxygen sensor (bank 1 sensor 2) (See page DI–265).

NG → Repair or replace.

OK

Replace three–way catalytic converter.

DTC	P0440	Evaporative Emission Control System Malfunction

CIRCUIT DESCRIPTION

The vapor pressure sensor and VSV for vapor pressure sensor are used to detect abnormalities in the evaporative emission control system.
The ECM decides whether there is an abnormality in the evaporative emission control system based on the vapor pressure sensor signal.
DTC P0440 is recorded by the ECM when evaporative emissions leak from the components within the dotted line in fig. 1 below, or when the vapor pressure sensor malfunctions.

fig. 1

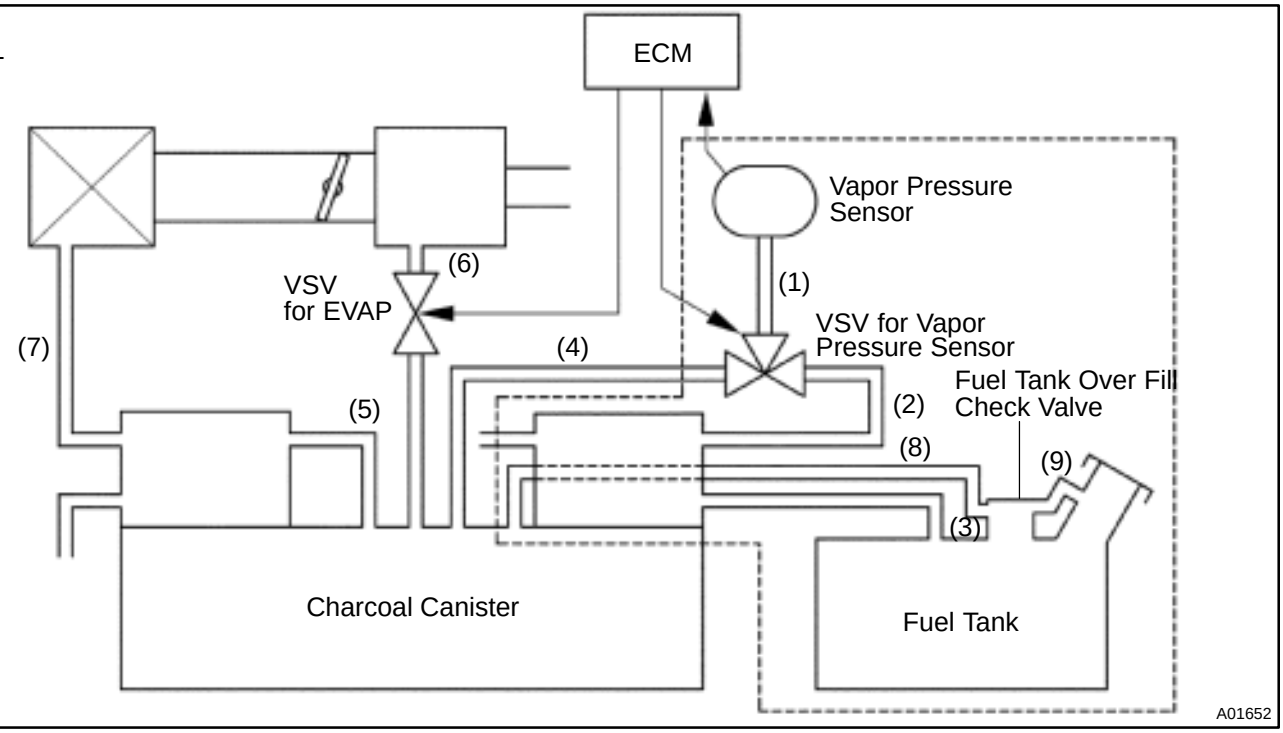

DTC No.	DTC Detecting Condition	Trouble Area
P0440	Fuel tank pressure is atmospheric pressure after vehicle is driven for 20 min. (2 trip detection logic)	●Vapor pressure sensor ●Fuel tank cap incorrectly installed ●Fuel tank cap cracked or damaged ●Vacuum hose cracked, holed, blocked, damaged or disconnected ((1) or (2) in fig. 1) ●Hose or tube cracked, holed, damaged or loose seal ((3) in fig. 1) ●Fuel tank cracked, holed or damaged ●Charcoal canister cracked, holed or damaged ●Fuel tank over fill check valve cracked or damaged

WIRING DIAGRAM

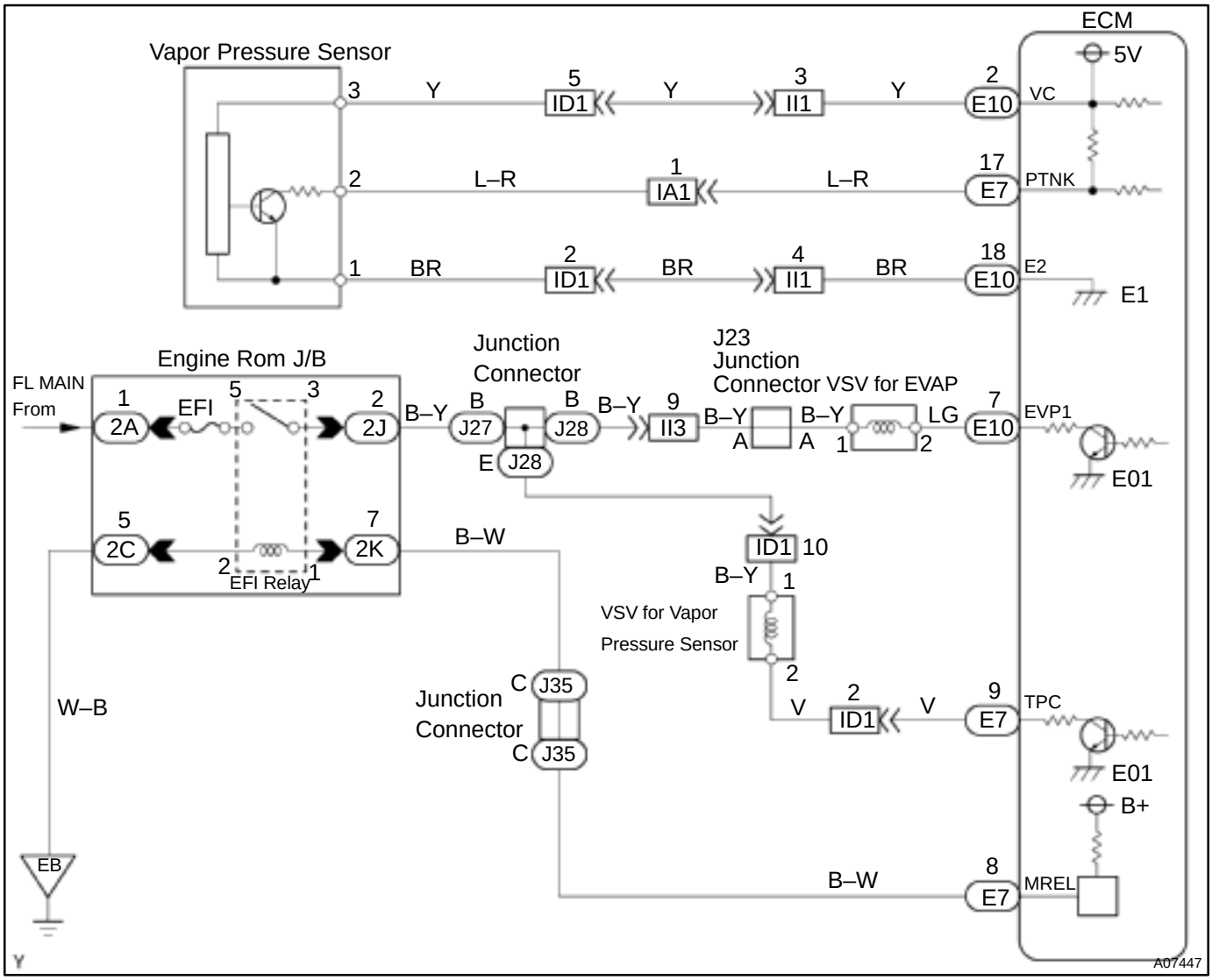

INSPECTION PROCEDURE

- If DTCs P0441, P0446, P0450 or P0451 is output after DTC P0440, first troubleshoot DTCs P0441, P0446, P0450 or P0451. If no malfunction is detected, troubleshoot DTC P0440 next.
- Ask the customer whether, after the MIL came on, the customer found the fuel tank cap loose and tightened it. Also ask the customer whether the fuel tank cap was loose when refuelling. If the fuel tank cap was not loose, it was the cause of the DTC. If the fuel tank cap was not loose or if the customer was not sure if it was loose, troubleshoot according to the following procedure.
- Read freeze frame data using TOYOTA hand–held tester or OBD II scan tool. Because freeze frame records the engine conditions when the malfunction is detected, when troubleshooting it is useful for determining whether the vehicle was running or stopped, the engine warmed up or not, the air–fuel ratio lean or rich, etc. at the time of the malfunction.
- When the ENGINE RUN TIME in the freeze frame data is less than 200 seconds, carefully check the VSV for EVAP, charcoal canister and vapor pressure sensor.

1	**Check whether hose close to fuel tank have been modified, and check whether there are signs of any accident near fuel tank or charcoal canister.**

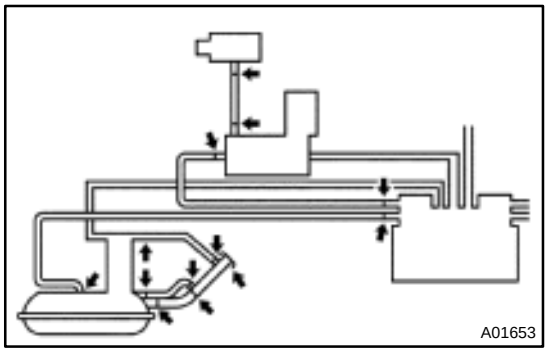

CHECK:

Check for cracks, deformation and loose connection of these parts:

- Fuel tank
- Charcoal canister
- Fuel tank filler pipe
- Hoses and tubes around fuel tank and charcoal canister

NG → **Repair or replace.**

OK

2	**Check that fuel tank cap is TOYOTA genuine parts.**

NG → **Replace to TOYOTA genuine parts.**

OK

3	**Check that fuel tank cap is correctly installed.**

NG → **Correctly install fuel tank cap.**

OK

4	**Check fuel tank cap (See page EC–6).**

NG → **Replace fuel tank cap.**

OK

5	**Check filler neck for damage.**

PREPARATION:

Remove the fuel tank cap.

CHECK:

Visually inspect the filler neck for damage.

NG → **Replace filler pipe.**

OK

6	**Check vacuum hoses between vapor pressure sensor and VSV for vapor pressure sensor, and VSV for vapor pressure sensor and charcoal canister (See page EC–3 , SF–62 and EC–6).**

CHECK:

(a) Check that the vacuum hose is connected correctly.
(b) Check the vacuum hose for looseness and disconnection.
(c) Check the vacuum hose for cracks, hole and damage.

NG → **Repair or replace.**

OK

7	**Check hose and tube between fuel tank and charcoal canister.**

CHECK:

(a) Check for proper connection of the fuel tank and fuel evap pipe (See page SF–1), fuel evap pipe and fuel tube under the floor, fuel tube under the floor and charcoal canister.
(b) Check the hose and tube for cracks, hole and damage.

NG → **Repair or replace.**

OK

8	**Check charcoal canister for cracks, hole and damage (See page EC–6).**

NG → **Replace charcoal canister.**

OK

9	**Check voltage between terminals VC and E2 of ECM connector.**

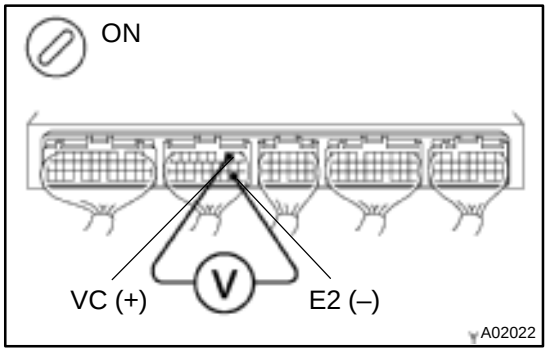

CHECK:

(a) Remove the glove compartment (See page SF–73).

(b) Turn the ignition switch ON.

CHECK:

Measure voltage between terminals VC and E2 of the ECM connector.

OK:

Voltage: 4.5 ~ 5.5 V

NG → **Check and replace ECM (See page IN–31).**

OK

10	Check voltage between terminals PTNK and E2 of ECM connectors.

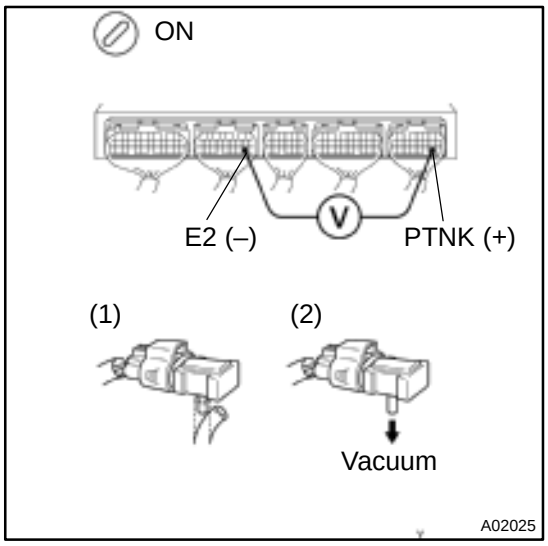

PREPARATION:

(a) Remove the glove compartment (See page SF–73).

(b) Turn the ignition switch ON.

CHECK:

Measure voltage between terminals PTNK and E2 of the ECM connectors.

(1) Disconnect the vacuum hose from the vapor pressure sensor.

(2) Using the MITYVAC (Hand–Held Vacuum Pump), apply a vacuum of 4.0 kPa (30 mmHg, 1.18 in.Hg) to the vapor pressure sensor.

NOTICE:

The vacuum applied to the vapor pressure sensor must be less than 66.7 kPa (500 mmHg, 19.7 in.Hg).

OK:

(1) Voltage: 2.9 ~ 3.7 V

(2) Voltage: 0.5 V or less

OK	Go to step 12.

NG

11	Check for open and short in harness and connector between vapor pressure sensor and ECM (See page IN–31).

NG	Repair or replace harness or connector.

OK

Replace vapor pressure sensor.

12	**Check fuell tank and fuel tank over fill check valve for cracks and damage. (See page EC–2)**

NG → **Replace fuel tank or fuel tank over fill check valve.**

OK

It is likely that vehicle user did not properly close fuel tank cap.
Please explain to customer how to properly install fuel tank cap.

DTC	P0441	Evaporative Emission Control System Incorrect Purge Flow

DTC	P0446	Evaporative Emission Control System Vent Control Malfunction

CIRCUIT DESCRIPTION

The vapor pressure sensor and VSV for vapor pressure sensor are used to detect abnormalities in the evaporative emission control system.

The ECM decides whether there is an abnormality in the evaporative emission control system based on the vapor pressure sensor signal.

DTCs P0441 and P0446 are recorded by the ECM when evaporative emissions leak from the components within the dotted line in fig. 1 below, or when there is a malfunction in either the VSV for EVAP, the VSV for vapor pressure sensor, or in the vapor pressure sensor itself.

fig. 1

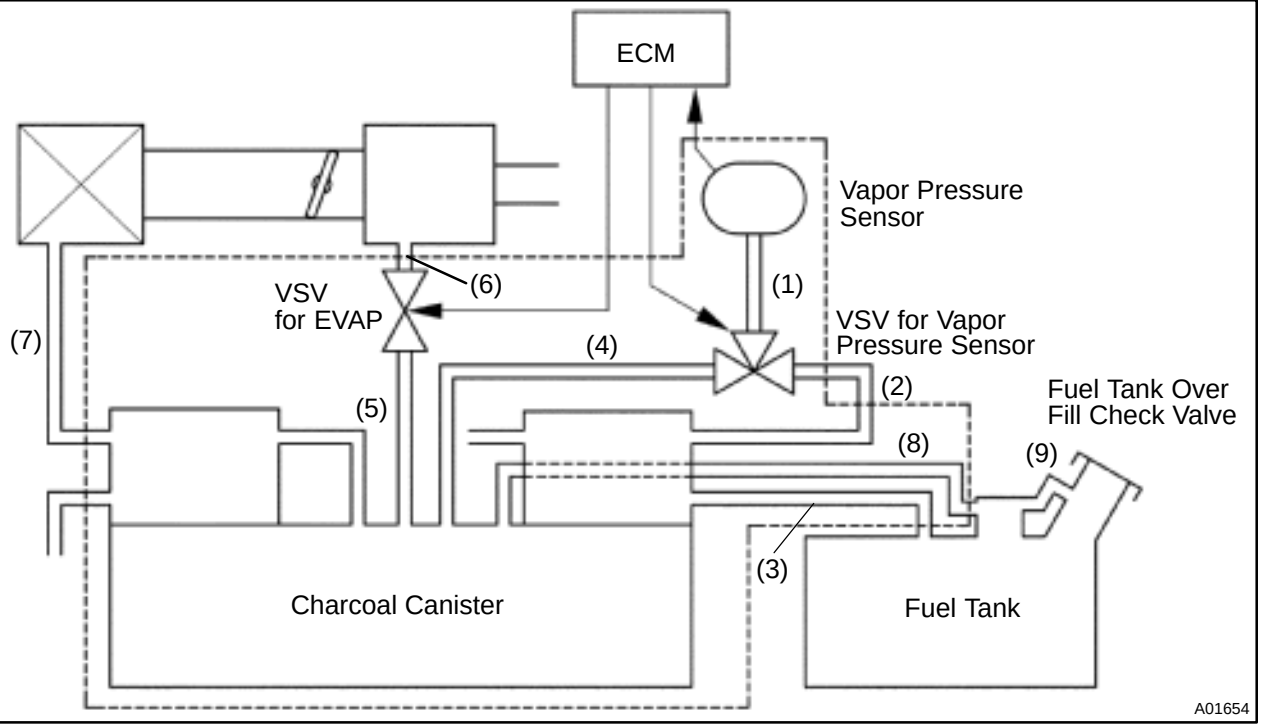

DTC No.	DTC Detecting Condition	Trouble Area
P0441	Pressure in charcoal canister does not drop during purge control (2 trip detection logic)	●Open or short in VSV circuit for EVAP ●Open or short in VSV circuit for vapor pressure sensor ●Open or short in vapor pressure sensor circuit ●VSV for EVAP ●VSV for vapor pressure sensor ●Vapor pressure sensor ●Vacuum hose cracks, holed blocked, damaged or disconnected ((1), (4), (5),(6) and (7) in fig. 1) ●Charcoal canister cracks, holed or damaged ●Fuel tank over fill check valve cracked or damaged
	During purge cut–off, pressure in charcoal canister is very low compared with atmospheric pressure (2 trip detection logic)	
P0446	When VSV for vapor pressure sensor is OFF, ECM judges that there is no continuity between vapor pressure sensor and charcoal canister (2 trip detection logic)	
	When VSV for vapor pressure sensor is ON, ECM judges that there is no continuity between vapor pressure sensor and fuel tank (2 trip detection logic)	
	After purge cut off operates, pressure in charcoal canister is maintained at atmospheric pressure (2 trip detection logic)	

WIRING DIAGRAM

Refer to DTC P0440 (Evaporative Emission Control System Malfunction) on page DI–311 for the WIRING DIAGRAM.

INSPECTION PROCEDURE

HINT:

- If DTCs P0441, P0446, P0450 or P0451 is output after DTC P0440, first troubleshoot DTCs P0441, P0446, P0450 or P0451. If no malfunction is detected, troubleshoot DTC P0440 next.
- Read freeze frame data using TOYOTA hand–held tester or OBD II scan tool. Because freeze frame records the engine conditions when the malfunction is detected, when troubleshooting it is useful for determining whether the vehicle was running or stopped, the engine warmed up or not, the air–fuel ratio lean or rich, etc. at the time of the malfunction.
- When the ENGINE RUN TIME in the freeze frame data is less than 200 seconds, carefully check the VSV for EVAP, charcoal canister and vapor pressure sensor.

TOYOTA hand–held tester

1	**Check VSV connector for EVAP, VSV connector for vapor pressure sensor and vapor pressure sensor connector for looseness and disconnection.**

NG → **Repair or connect VSV or sensor connector.**

OK

2	**Check vacuum hoses (1), (4), (5), (6), (7) and (8) on page DI–311).**

CHECK:

(a) Check that the vacuum hose is connected correctly.
(b) Check the vacuum hose for looseness and disconnection.
(c) Check the vacuum hose for cracks, hole, damage and blockage.

NG → **Repair or replace.**

OK

3	**Check voltage between terminals VC and E2 of ECM connector (See page DI–311, step 9).**

NG → **Check and replace ECM (See page IN–31).**

OK

4	**Check voltage between terminals PTNK and E2 of ECM connectors (See page DI–311, step 10).**

OK → **Go to step 6.**

NG

5	**Check for open and short in harness and connector between vapor pressure sensor and ECM (See page IN–31).**

NG → **Repair or replace harness or connector.**

OK

Replace vapor pressure sensor.

6	Check purge flow.

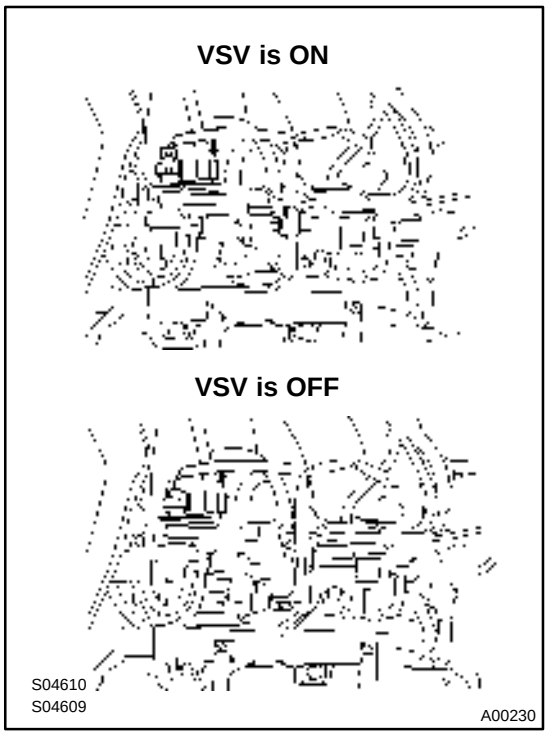

PREPARATION:

(a) Connect the TOYOTA hand–held tester to the DLC3.
(b) Select the ACTIVE TEST mode on the TOYOTA hand–held tester.
(c) Disconnect from the charcoal canister the vacuum hose to the VSV for EVAP.
(d) Start the engine.

CHECK:

When the VSV for EVAP is operated by the TOYOTA hand–held tester, check whether the disconnected hose applies suction to your finger.

OK:

VSV is ON:
Disconnected hose applies suction to your finger.
VSV is OFF:
Disconnected hose applies no suction to your finger.

OK	Go to step 10.

NG

7	Check vacuum hoses between intake manifold and VSV for EVAP, and VSV for EVAP and charcoal canister.

CHECK:

(a) Check that the vacuum hose is connected correctly.
(b) Check the vacuum hose for looseness and disconnection.
(c) Check the vacuum hose for cracks, hole, damage and blockage.

NG	Repair or replace.

OK

8	Check operation of VSV for EVAP (See page SF–58).

OK → Go to step 9.

NG

Replace VSV and charcoal canister, and then clean the vacuum hoses between throttle body and VSV for EVAP, and VSV for EVAP and charcoal canister.

9	Check for open and short in harness and connector between EFI main relay (Marking: EFI) and VSV for EVAP, VSV for EVAP and ECM (See page IN–31).

NG → Repair or replace harness or connector.

OK

Check and replace ECM (See page IN–31).

10	Check VSV for vapor pressure sensor.

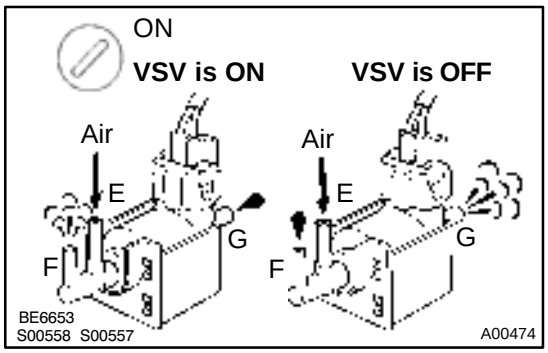

PREPARATION:

(a) Connect the TOYOTA hand–held tester to the DLC3.
(b) Turn the ignition switch ON and push the OBD II scan tool or TOYOTA hand–held tester main switch ON.
(c) Select the ACTIVE TEST mode on the TOYOTA hand–held tester.

CHECK:

Check the VSV operation when it is operated by TOYOTA hand–held tester.

OK:

VSV is ON:
Air from pipe E is flowing out through pipe F.
VSV is OFF:
Air from pipe E is flowing out through pipe G.

OK	Go to step 13.

NG

11	Check operation of VSV for vapor pressure sensor (See page SF–62).

OK	Go to step 12.

NG

Replace VSV and charcoal canister, and then clean the vacuum hoses between charcoal canister and VSV for vapor pressure sensor, and VSV for vapor pressure sensor and vapor pressure sensor.

12	**Check for open and short in harness and connector between EFI main relay (Marking: EFI) and VSV for vapor pressure sensor, and VSV for vapor pressure sensor and ECM (See page IN–31).**

NG → **Repair or replace harness or connector.**

OK

Check and replace ECM (See page IN–31).

13	**When VSV connector for vapor pressure sensor is disconnected and VSV for EVAP is ON, measure voltage between terminals PTNK and E2 of ECM connectors.**

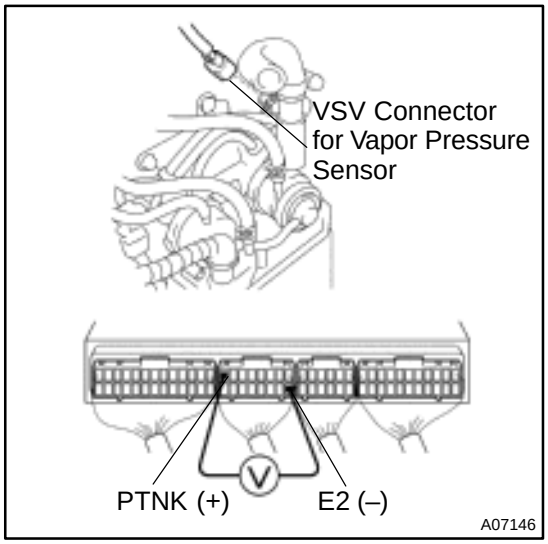

PREPARATION:

(a) Connect the TOYOTA hand–held tester to the DLC3.
(b) Disconnect the VSV connector for vapor pressure sensor.
(c) Select the ACTIVE TEST mode on the TOYOTA hand–held tester.
(d) Start the engine.

CHECK:

Measure voltage between terminals PTNK and E2 of ECM connectors. Using the TOYOTA hand–held tester when VSV for EVAP is ON, .

OK:

Voltage: 2.0 V or less

OK → **Go to step 15.**

NG

14	**Check vacuum hoses between charcoal canister and VSV for vapor pressure sensor, and vapor pressure sensor and VSV for vapor pressure sensor.**

CHECK:

(a) Check that the vacuum hose is connected correctly.
(b) Check the vacuum hose for looseness and disconnection.
(c) Check the vacuum hose for cracks, hole, damage and blockage.

NG → **Repair or replace.**

OK

15	**Check charcoal canister.**

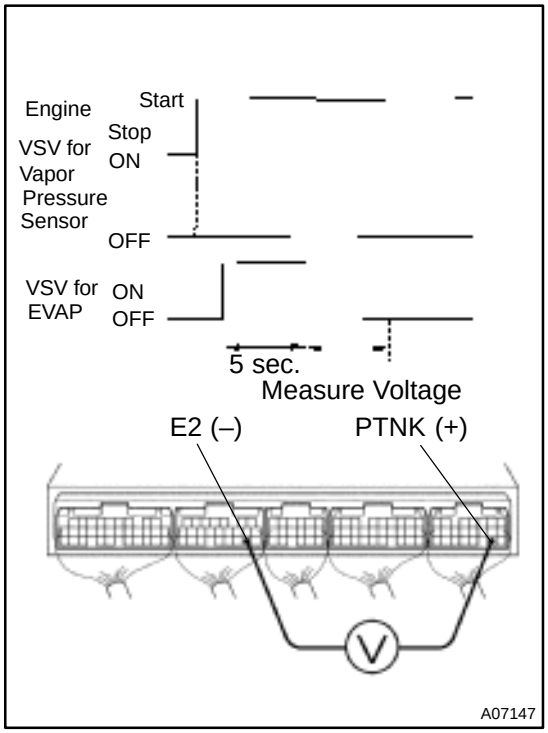

PREPARATION:

(a) Connect the TOYOTA hand–held tester to the DLC3.
(b) Remove the fuel tank cap.
(c) Disconnect the VSV connector for vapor pressure sensor.
(d) Select the ACTIVE TEST mode on the TOYOTA hand–held tester.
(e) Start the engine.
(f) VSV for EVAP is ON by the TOYOTA hand–held tester and remains on for 5 sec.

CHECK:

Measure voltage between terminals PTNK and E2 of ECM connectors 5 sec. after switching VSV for EVAP from ON to OFF.

OK:

Voltage: 2.5 V or less

NG → **Replace charcoal canister.**

OK

16	Remove charcoal canister and check it (See page EC–6).

NG → Replace charcoal canister.

OK

17	Check fuel tank over fill check valve (See page EC–2).

NG → Replace fuel tank over fill check valve or fuel tank.

OK

Check and replace ECM (See page IN–31).

OBD II scan tool (excluding TOYOTA hand–held tester)

1	Check VSV connector for EVAP, VSV connector for vapor pressure sensor and vapor pressure sensor connector for looseness and disconnection.

NG → Repair or connect VSV or sensor connector.

OK

2	Check vacuum hoses (1), (4), (5), (6) (7) and (8) on Page DI–311).

CHECK:

(a) Check that the vacuum hose is connected correctly.
(b) Check the vacuum hose for looseness and disconnection.
(c) Check the vacuum hose for cracks, hole, damage and blockage.

NG → Repair or replace.

OK

3	Check voltage between terminals VC and E2 of ECM connector (See page DI–311, step 9).

NG → Check and replace ECM (See page IN–31).

OK

4	Check voltage between terminals PTNK and E2 of ECM connectors (See page DI–311, step 10).

OK → Go to step 6.

NG

5	Check for open and short in harness and connector between vapor pressure sensor and ECM (See page IN–31).

NG → Repair or replace harness or connector.

OK

Replace vapor pressure sensor.

6	Check VSV for EVAP.

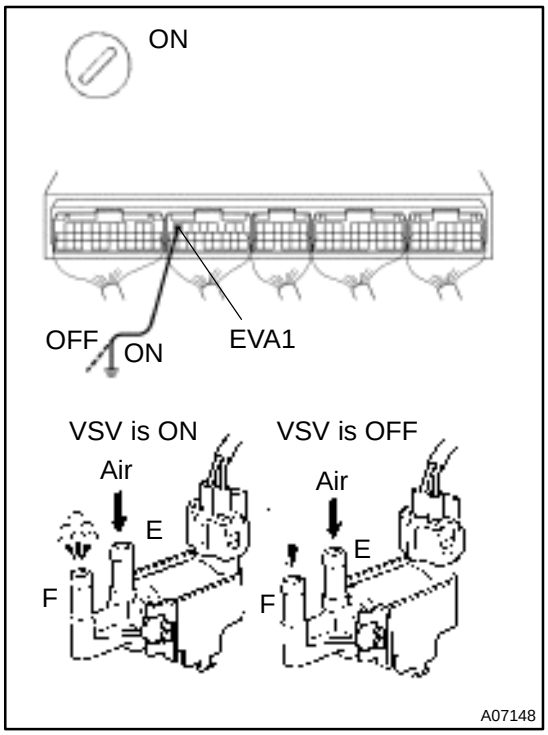

PREPARATION:

(a) Remove the glove compartment (See page SF–73).

(b) Turn the ignition switch ON.

CHECK:

Check VSV function.

(1) Connect between terminal EVA1 of the ECM connector and body ground (ON).

(2) Disconnect between terminal EVP of the ECM connector and body ground (OFF).

OK:

(1) VSV is ON:
Air from pipe E is flowing out through pipe F.
(2) VSV is OFF:
Air does not flow from pipe E to pipe F.

OK	Go to step 9.

NG

7	Check operation of VSV for EVAP (See page SF–58).

OK	Go to step 9.

NG

Replace VSV and charcoal canister, and then clean the vacuum hoses between throttle body and VSV for EVAP, and VSV for EVAP and charcoal canister.

8	**Check for open and short in harness and connector between EFI main relay (Marking: EFI) and VSV for EVAP and ECM (See page IN–31).**

NG → **Repair or replace harness or connector.**

OK

Check and replace ECM (See page IN–31).

9	**Check VSV for vapor pressure sensor.**

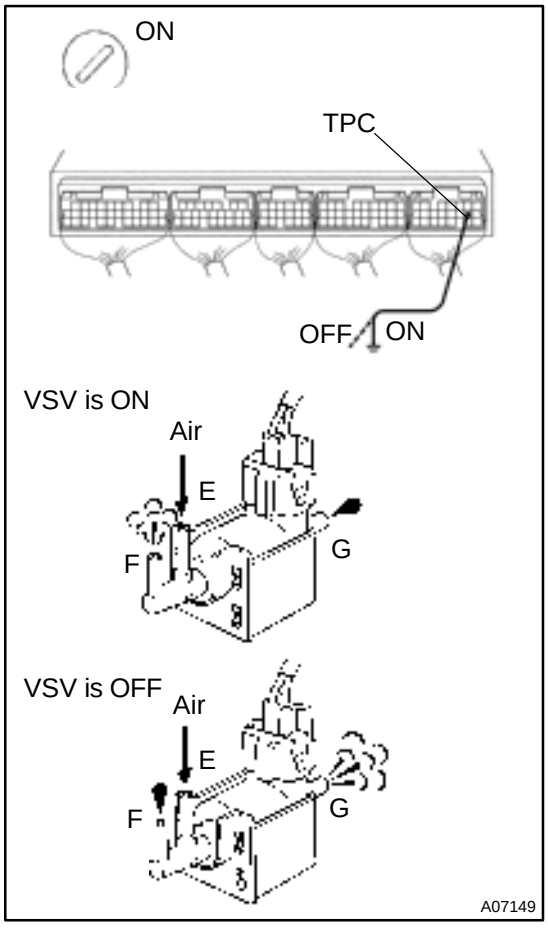

PREPARATION:

(a) Remove the glove compartment (See page SF–73).

(b) Turn the ignition switch ON.

CHECK:

Check VSV function.

(1) Connect between terminal TPC of the ECM connector and body ground (ON).

(2) Disconnect between terminal TPC of the ECM connector and body ground (OFF).

OK:

(1) VSV is ON:
Air from pipe E is flowing out through pipe F.
(2) VSV is OFF:
Air from pipe E flows out through pipe G.

OK → **Check and replace charcoal canister (See page EC–6).**

NG

10	Check operation of VSV for vapor pressure sensor (See page SF–62).

OK → Go to step 11.

NG →

Replace VSV and clean the vacuum hoses between charcoal canister and VSV for vapor pressure sensor, and VSV for vapor pressure sensor and vapor pressure sensor, and then check the charcoal canister.

11	Check for open and short in harness and connector between EFI main relay (Marking: EFI) and VSV for vapor pressure sensor, and VSV for vapor pressure sensor and ECM (See page IN–31).

NG → Repair or replace harness or connector.

OK →

Check and replace ECM (See page IN–31).

12	Check the fuel tank over fill check valve (See page EC–6).

NG → Replace fuel tank over fill check valve or fuel tank.

OK →

Check and replace charcoal canister (See page EC–6).

DTC	P0450	Evaporative Emission Control System Pressure Sensor Malfunction

DTC	P0451	Evaporative Emission Control System Pressure Sensor Range/Performance

CIRCUIT DESCRIPTION

The vapor pressure sensor and VSV for vapor pressure sensor are used to detect abnormalities in the evaporative emission control system.

The ECM decides whether there is an abnormality in the evaporative emission control system based on the vapor pressure sensor signal.

DTC P0450 or p0451 is recorded by the ECM when the vapor pressure sensor malfunction.

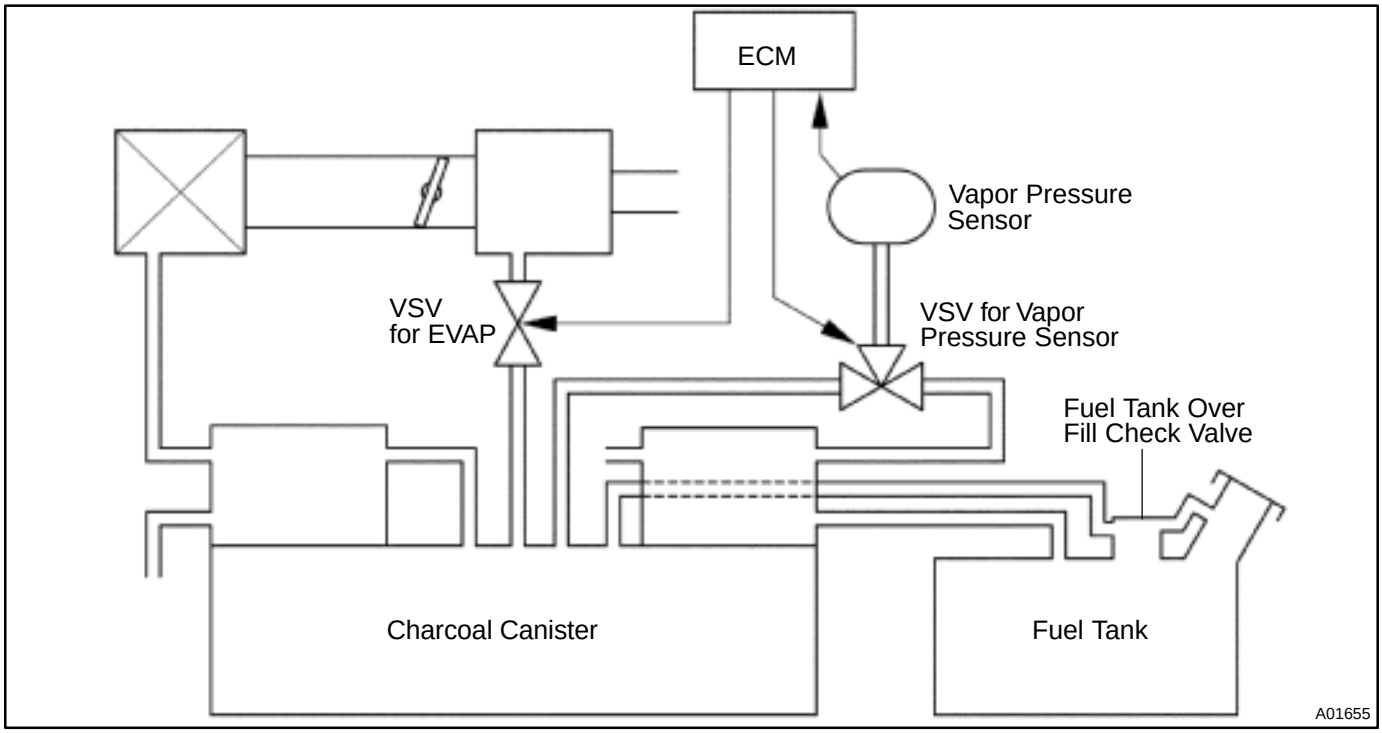

DTC No.	DTC Detecting Condition	Trouble Area
P0450	10 seconds or more after engine starting condition (a) or (b) continues for 7 seconds or more: (2 trip detection logic) (a) Vapor Pressure Sensor Value < –3.5 kPa (–26 mmHg, –1.0 in.Hg) (b) Vapor Pressure Sensor Value ~ 1.5 kPa (15 mmHg, 0.4 in.Hg)	●Open or short in vapor pressure sensor circuit ●Vapor pressure sensor ●ECM
P451	Vapor pressure sensor output extremely changes under conditions of (a), (b) and (c): (2 trip detection logic) (a) Vehicle speed: 0 km/h (0 mph) (b) Engine speed: Idling (c) VSV for vapor pressure sensor is ON.	

WIRING DIAGRAM

Refer to DTC P0440 (Evaporative Emission Control Malfunction) on page DI–311.

INSPECTION PROCEDURE

HINT:

- If DTCs P0441, P0446, P0450 or P0451 is output after DTC P0440, first troubleshoot DTCs P0441, P0446 ,P0450 or P0451. If no malfunction is detected, troubleshoot DTC P0440 next.
- Read freeze frame data using TOYOTA hand–held tester or OBD II scan tool. Because freeze frame records the engine conditions when the malfunction is detected, when troubleshooting it is useful for determining whether the vehicle was running or stopped, the engine warmed up or not, the air–fuel ratio lean or rich, etc. at the time of the malfunction.
- When the ENGINE RUN TIME in the freeze frame data is less than 200 seconds, carefully check the VSV for EVAP, charcoal canister and vapor pressure sensor.

1	**Check voltage between terminals VC and E2 of ECM connector (See page DI–311, step 9).**

NG → **Check and replace ECM (See page IN–31).**

OK

2	**Check voltage between terminals PTNK and E2 of ECM connectors (See page DI–311, step 10).**

OK → **Check and replace ECM (See page IN–31).**

NG

3	**Check for open and short in harness and connector between vapor pressure sensor and ECM (See page IN–31).**

NG → **Repair or replace harness or connector.**

OK

Replace vapor pressure sensor.

DI082–06

DTC	P0500	Vehicle Speed Sensor Malfunction

CIRCUIT DESCRIPTION

The vehicle speed sensor outputs a 4–pulse signal for every revolution of the rotor shaft, which is rotated by the transmission output shaft via the driven gear. After this signal is converted into a more precise rectangular waveform by the waveform shaping circuit inside the combination meter, it is then transmitted to the ECM. The ECM determines the vehicle speed based on the frequency of these pulse signals.

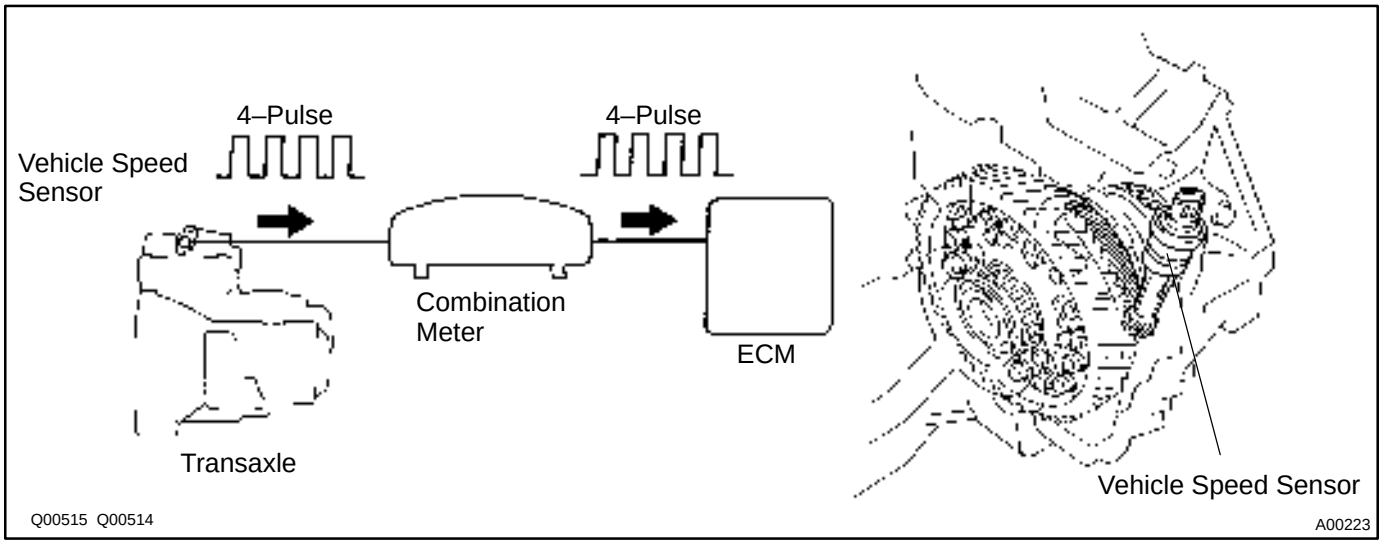

DTC No.	DTC Detecting Condition	Trouble Area
P0500	No vehicle speed sensor signal to ECM under conditions (a) and (b): (2 trip detection logic) (a) Park/neutral position switch is OFF (b) Vehicle is being driven	●Open or short in vehicle speed sensor circuit ●Vehicle speed sensor ●Combination meter ●ECM

WIRING DIAGRAM

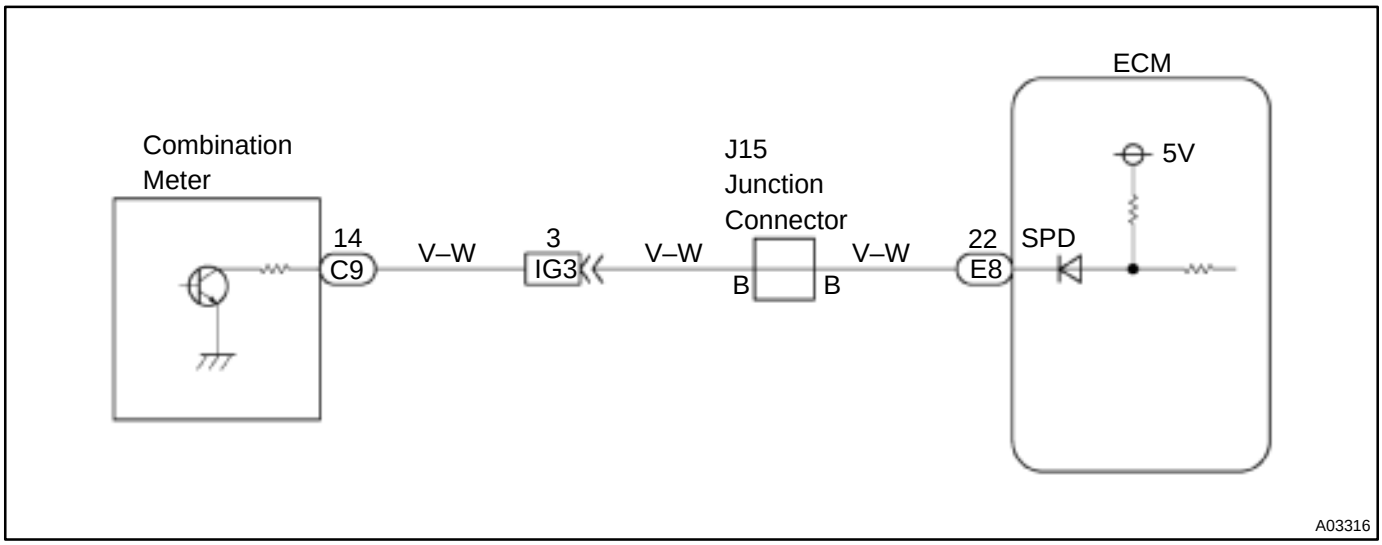

INSPECTION PROCEDURE

HINT:

Read freeze frame data using TOYOTA hand–held tester or OBD II scan tool. Because freeze frame records the engine conditions when the malfunction is detected, when troubleshooting it is useful for determining whether the vehicle was running or stopped, the engine warmed up or not, the air–fuel ratio lean or rich, etc. at the time of the malfunction.

1	**Check operation of speedometer.**

CHECK:

Drive the vehicle and check if the operation of the speedometer in the combination meter is normal.

HINT:

The vehicle speed sensor is operating normally if the speedmeter display is normal.

NG → **Check speedmeter circuit.**

OK

2	**Check for short in harness and connector between terminal SPD of ECM and body ground (See page IN–31).**

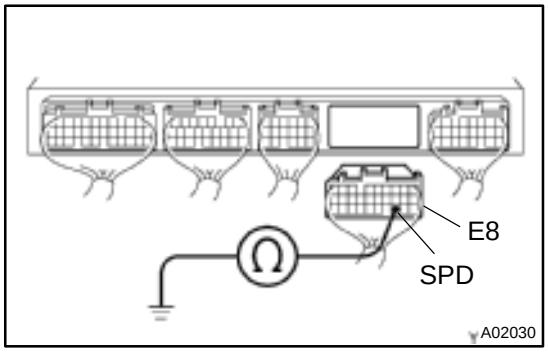

PREPARATION:

(a) Remove the glove compartment (See page SF–73).

(b) Disconnect the E8 connector of ECM.

CHECK:

Check continuity between terminal SPD of ECM and body ground.

OK:

No continuity (1 MΩ or higher)

NG → **Repair or replace harness or connector.**

OK

3	**Check voltage between terminal SPD of ECM connector and body ground.**

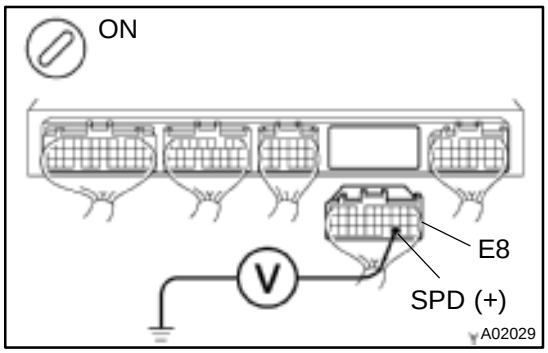

PREPARATION:

(a) Turn the ignition switch ON.

(b) Disconnect the E8 connector of ECM.

CHECK:

Measure voltage between terminal SPD of the ECM connector and body ground.

OK:

Voltage: 9 ~ 14 V

NG → **Check for open in harness and connector between junction connector (J15) and ECM (See page IN–31).**

OK

4	**Check for open in harness and connector between junction connector (J14) and combination meter (See page IN–31).**

NG → **Repair or replace harness or connector.**

OK

Check and replace ECM (See page IN–31).

DI083–06

DTC	P0505	Idle Control System Malfunction

CIRCUIT DESCRIPTION

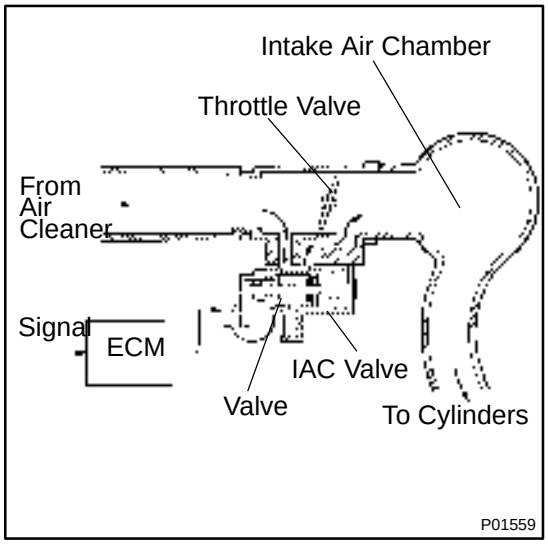

The rotary solenoid type IAC valve is located in front of the intake air chamber and intake air bypassing the throttle valve is directed to the IAC valve through a passage.
In this way the intake air volume bypassing the throttle valve is regulated, controlling the engine speed.
The ECM operates only the IAC valve to perform idle–up and provide feedback for the target idling speed.

DTC No.	DTC Detecting Condition	Trouble Area
P0505	Idle speed continues to vary greatly from target speed (2 trip detection logic)	●IAC valve is stuck or closed ●Open or short in IAC valve circuit ●Open or short in A/C signal circuit ●Air intake (hose loose) ●ECM

WIRING DIAGRAM

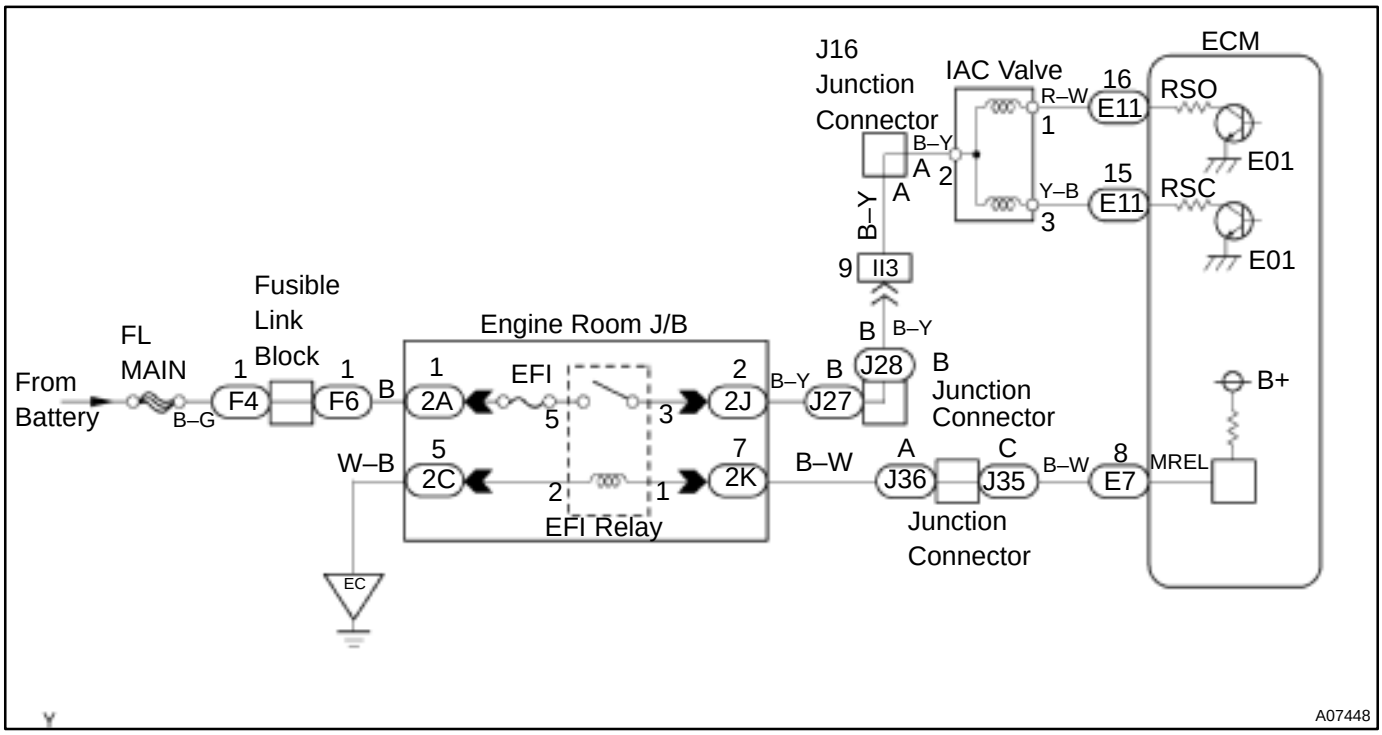

INSPECTION PROCEDURE

HINT:

Read freeze frame data using TOYOTA hand held tester or OBD II scan tool. Because freeze frame records the engine conditions when the malfunction is detected, when troubleshooting it is useful for determining whether the vehicle was running or stopped, the engine warmed up or not, the air–fuel ratio lean or rich, etc. at the time of the malfunction.

1	**Check engine idle speed.**

PREPARATION:

(a) Warm up engine to normal operating temperature.
(b) Switch off all accessories.
(c) Switch off air conditioning.
(d) Shift transmission into ”N” or neutral position.
(e) Connect the OBD II scan tool or TOYOTA hand–held tester to DLC3 on the vehicle.
(f) Using SST, connect terminals TE1 and E1 of the DLC3.

CHECK:

Check the difference of engine speed between the ones less than 5 sec. and more than 5 sec. after connecting terminals TE1 and E1 of the DLC1.

OK:

Difference of engine speed: More than 100 rpm

OK → **Go to step 6.**

NG

2	Check voltage between terminals RSO, RSC of ECM connector and body ground.

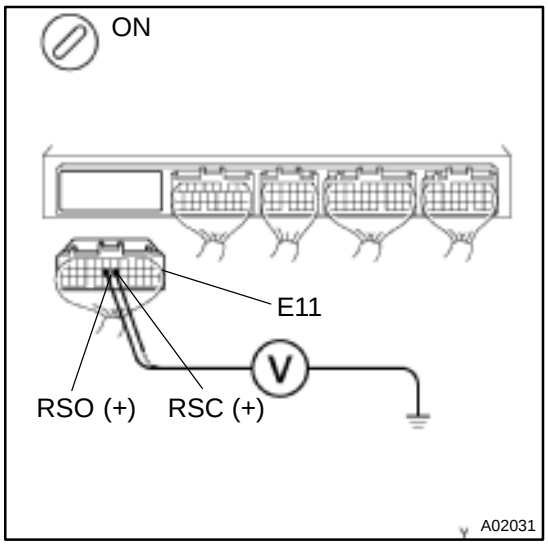

PREPARATION:

(a) Remove the glove compartment (See page SF–73).
(b) Disconnect the E11 connector of ECM.
(c) Turn the ignition switch ON.

CHECK:

Measure voltage between terminals RSO, RSC of the ECM connector and body ground.

OK:

Voltage: 9 ~ 14 V

OK	Go to step 4.

NG

3	Check IAC valve (See page SF–46).

NG	Replace IAC valve.

OK

Check for open and short in harness and connector between engine room J/B and IAC valve, IAC valve and ECM (See page IN–31).

4	Check operation of IAC valve (See page SF–42).

NG	Repair or replace IAC valve.

OK

5	Check the blockage of IAC valve and the passage to bypass the throttle valve.

NG → Repair or replace IAC valve.

OK →

Check and replace ECM (See page IN–31).

6	Check for A/C signal circuit (See page AC–88).

NG → Repair or replace.

OK →

Check air induction system
(See page SF–1).

DI1K6–03

DTC	P1130	A/F Sensor Circuit Range/Performance Malfunction (Only for California Spec.)

DTC	P1150	A/F Sensor Circuit Range/Performance Malfunction (Only for California Spec.)

CIRCUIT DESCRIPTION

Refer to DTC P0125 (Insufficient Temp. for Closed Loop Fuel Control (Only for California Spec.)) on Page DI–249.

DTC No.	DTC Detecting Condition	Trouble Area
P1130 P1150	Voltage output* of A/F sensor remains at 3.8 V or more, or 2.8 V or less, during engine running after engine is warmed up (2 trip detection logic) *: Output value changes at inside of ECM only.	●Open or short in A/F sensor (bank 1, 2 sensor 1) circuit ●A/F sensor (bank 1, 2 sensor 1) ●ECM
	Voltage output* of A/F sensor does not change from 3.30 V, during engine running after engine is warmed up (2 trip detection logic) *: Output value changes at inside of ECM only.	
	Open or short in A/F sensor circuit (2 trip detection logic)	

HINT:

- After confirming DTC P1130 or P01150, use the OBD II scan tool or TOYOTA hand–held tester to confirm voltage output of A/F sensor (AFS B1 S1/O2S B1 S1) from ”CURRENT DATA”.
- The A/F sensor’s output voltage and the short–term fuel value can be read using the OBD II scan tool or TOYOTA hand–held tester.
- The ECM controls the voltage of AFR/AFL～ and AFR/AFL＞ terminals of ECM to the fixed voltage. Therefore, it is impossible to confirm the A/F sensor output voltage without OBD II scan tool or TOYOTA hand–held tester.
- OBD II scan tool (excluding TOYOTA hand–held tester) displays the one fifth of the A/F sensor output voltage which is displayed on the TOYOTA hand–held tester.

WIRING DIAGRAM

Refer to DTC P0125 (Insufficient Coolant Temp. for Closed Loop Fuel Control (Only for California Spec.)) on page DI–249.

CONFIRMATION DRIVING PATTERN

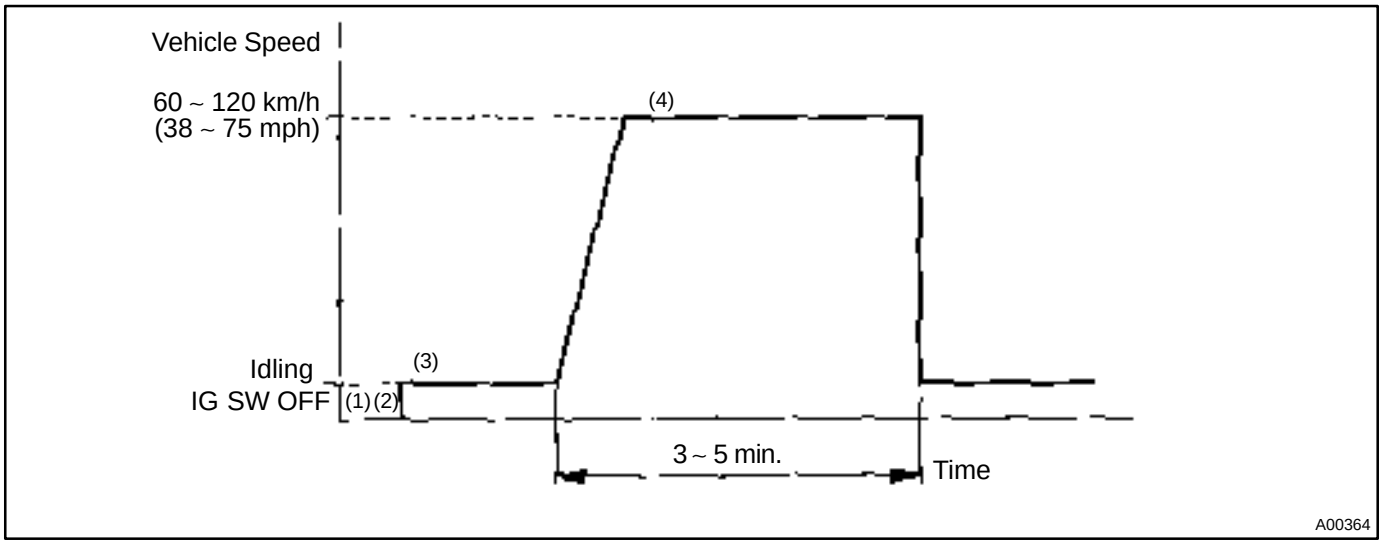

(a) Connect the TOYOTA hand–held tester to the DLC3.
(b) Switch the TOYOTA hand–held tester from normal mode to check mode (See page DI–197).
(c) Start the engine and warm it up with all accessory switches OFF.
(d) Drive the vehicle at 60 ~ 120 km/h (38 ~ 75 mph) and engine speed at 1,600 ~ 3,200 rpm for 3 ~ 5 min.

HINT:

If a malfunction exists, the MIL will light up during step (4).

NOTICE:

If the conditions in this test are not strictly followed, detection of the malfunction will not be possible.
If you do not have a TOYOTA hand–held tester, turn the ignition switch OFF after performing steps (3) and (4), then perform steps (3) and (4) again.

INSPECTION PROCEDURE

HINT:

- If DTC P1130 is displayed, check Bank 1 Sensor 1 circuit.
- If DTC P1150 is displayed, check Bank 2 Sensor 1 circuit.
- Read frame freeze data using TOYOTA hand–held tester or OBD II scan tool. Because freeze frame records the engine conditions when the malfunction is detected, when troubleshooting it is useful for determining whether the vehicle was running or stopped, the engine warmed up or not, the air–fuel ratio lean or rich, etc. at the time of the malfunction.

1	**Are there any other codes (besides DTC P1130, P1150) being output?**

YES → **Go to relevant DTC chart.**

NO

2	**Connect the OBDII scan tool or TOYOTA hand–held tester and read value for voltage output of A/F sensors (bank1, 2 sensor1).**

PREPARATION:

(a) Connect the OBD II scan tool or TOYOTA hand–held tester to the DLC3.

(b) Warm up the A/F sensors (bank1, 2 sensor1) with the engine at 2,500 rpm for approx. 90 sec.

CHECK:

Read voltage of A/F sensors (bank 1, 2 sensor 1) on the screen of OBD II scan tool or TOYOTA hand–held tester when you perform all the following conditions.

HINT:

The voltage of AFR～ and AFL～ terminals of ECM is fixed at 3.3 V and the voltage of AFR＞ and AFL＞ terminals is fixed at 3.0 V. Therefore, it is impossible to check the A/F sensors (bank1, 2 sensor1) output voltage at the terminals (AFR～, AFL～/AFR＞, AFL＞) of ECM.

OK:

Condition	A/F Sensor Voltage value
Engine idling	●Not remains at 3.30 V (*0.660 V) ●Not remains at 3.8 V (*0.76 V) or more ●Not remains at 2.8 V (*0.56 V) or less *: When you use the OBD II scan tool (excluding TOYOTA hand–held tester)
Engine racing	
Driving at engine speed 1,500 rpm or more and vehicle speed 40 km/h (25 mph) or more, and operate throttle valve open and close.	

HINT:

- During fuel enrichment, there is a case that the output voltage of A/F sensors (bank1, 2 sensor1) is below 2.8 V (* 0.56 V), it is normal.
- During fuel cut, there is a case that the output voltage of A/F sensors (bank1, 2 sensor1) is above 3.8 V (* 0.76 V), it is normal.
- If output voltage of A/F sensors (bank1, 2 sensor1) remains at 3.30 V (* 0.660 V) even after performing all the above conditions, A/F sensors (bank1, 2 sensor1) circuit may be open.
- If output voltage of A/F sensors (bank1, 2 sensor1) remains at 3.8 V (* 0.76V) or more, or 2.8 V (*0.56 V) or less even after performing all the above conditions, A/F sensors (bank1, 2 sensor1) circuit may be short.

*: When you use the OBD II scan tool (excluding TOYOTA hand–held tester).

OK → **Go to step 9.**

NG

3	Check for open and short in harness and connector between ECM and A/F sensors (bank 1, 2 sensor 1) (See page IN–31).

NG → Repair or replace harness or connector.

OK ↓

4	Check resistance of A/F sensor heater (See page SF–68).

NG → Replace A/F sensor.

OK ↓

5	Check air induction system (See page SF–1).

NG → Repair or replace.

OK ↓

6	Check EGR system (See page EC–11).

NG → Replace EGR system.

OK ↓

7	Check fuel pressure (See page SF–21).

NG → Check and repair fuel pump, fuel pipe line and filter (See page SF–1).

OK ↓

8	Check injector injection (See page SF–25).

NG → Replace injector.

OK →

Replace A/F sensors (bank1, 2 sensor1).

9	Perform confirmation driving pattern.

Go →

10	Are there DTC P1130 and/or P1150 being output again ?

YES → Check and replace ECM (See page IN–31.).

NO →

11	Did vehicle runs out of fuel in the past ?

NO → Check for intermittent problems (See page DI–197).

YES →

DTC P1130 and /or P1150 is caused by running out of fuel.

DI1K7–03

DTC	P1133	A/F Sensor Circuit Response Malfunction (Bank 1 Sensor 1) (Only for California Spec.)

DTC	P1153	A/F Sensor Circuit Response Malfunction (Bank 2 Sensor 1) (Only for California Spec.)

CIRCUIT DESCRIPTION

Refer to DTC P0125 (Insufficient Coolant Temp. for Closed Loop Fuel Control (Only for California Spec.)) on page DI–249.

DTC No.	DTC Detecting Condition	Trouble Area
P1133 P1155	After engine is warmed up and during vehicle driving at engine speed 1,400 rpm or more and vehicle speed 60 km/h (38 mph) or more, if response characteristic of A/F sensor becomes deteriorated (2 trip detection logic)	●A/F sensors (bank 1, 2 sensor 1)

INSPECTION PROCEDURE

HINT:

Read freeze frame data using TOYOTA hand–held tester or OBD II scan tool. Because freeze frame records the engine conditions when the malfunction is detected, when troubleshooting it is useful for determining whether the vehicle was running or stopped, the engine warmed up or not, the air–fuel ratio lean or rich, etc. at the time of the malfunction.

1	**Are there any other codes (besides DTC P1133, P1153) being output?**

YES → **Go to relevant DTC chart.**

NO

2	**Connect the OBDII scan tool or TOYOTA hand–held tester and read value for voltage output of A/F sensors (bank1, 2 sensor1).**

PREPARATION:

(a) Connect the OBD II scan tool or TOYOTA hand–held tester to the DLC3.

(b) Warm up the A/F sensors (bank1, 2 sensor1) with the engine at 2,500 rpm for approx. 90 sec.

CHECK:

Read voltage of A/F sensors (bank 1, 2 sensor 1) on the screen of OBD II scan tool or TOYOTA hand–held tester when you perform all the following conditions.

HINT:

The voltage of AFR～ and AFL～ terminals of ECM is fixed at 3.3 V and the voltage of AFR＞ and AFL＞ terminals is fixed at 3.0 V. Therefore, it is impossible to check the A/F sensors (bank1, 2 sensor1) output voltage at the terminals (AFR～, AFL～/AFR＞, AFL＞) of ECM.

OK:

Condition	A/F Sensor Voltage value
Engine idling	●Not remains at 3.30 V (*0.660 V) ●Not remains at 3.8 V (*0.76 V) or more ●Not remains at 2.8 V (*0.56 V) or less *: When you use the OBD II scan tool (excluding TOYOTA hand–held tester)
Engine racing	
Driving at engine speed 1,500 rpm or more and vehicle speed 40 km/h (25 mph) or more, and operate throttle valve open and close.	

HINT:

- During fuel enrichment, there is a case that the output voltage of A/F sensors (bank1, 2 sensor1) is below 2.8 V (* 0.56 V), it is normal.
- During fuel cut, there is a case that the output voltage of A/F sensors (bank1, 2 sensor1) is above 3.8 V (* 0.76 V), it is normal.
- If output voltage of A/F sensors (bank1, 2 sensor1) remains at 3.30 V (* 0.660 V) even after performing all the above conditions, A/F sensors (bank1, 2 sensor1) circuit may be open.
- If output voltage of A/F sensors (bank1, 2 sensor1) remains at 3.8 V (* 0.76V) or more, or 2.8 V (*0.56 V) or less even after performing all the above conditions, A/F sensors (bank1, 2 sensor1) circuit may be short.

*: When you use the OBD II scan tool (excluding TOYOTA hand–held tester).

OK → **Go to step 9.**

NG

3	Check for open and short in harness and connector between ECM and A/F sensors (bank 1, 2 sensor 1) (See page IN–31).

NG → Repair or replace harness or connector.

OK ↓

4	Check resistance of A/F sensor heater (See page SF–68).

NG → Replace A/F sensor.

OK ↓

5	Check air induction system (See page SF–1).

NG → Repair or replace.

OK ↓

6	Check EGR system (See page EC–11).

NG → Replace EGR system.

OK ↓

7	Check fuel pressure (See page SF–21).

NG → Check and repair fuel pump, fuel pipe line and filter (See page SF–1).

OK ↓

8	Check injector injection (See page SF–25).

NG → Replace injector.

OK →

Replace A/F sensors (bank1, 2 sensor1).

9	Perform confirmation driving pattern (See page DI–197).

Go →

10	Are there DTC P1133 and/or P1153 being output again ?

YES → Check and replace ECM (See page IN–31).

NO →

11	Did vehicle runs out of fuel in the past ?

NO → Check for intermittent problems (See page DI–197).

YES →

DTC P1133 and /or P1153 is caused by running out of fuel.

DI1K8–04

DTC	P1135	A/F Sensor Heater Circuit Malfunction (Bank 1 Sensor 1) (Only for California Spec.)

DTC	P1155	A/F Sensor Heater Circuit Malfunction (Bank 2 Sensor 1) (Only for California Spec.)

CIRCUIT DESCRIPTION

Refer to DTC P0125 (Insufficient Coolant Temp. for Closed Loop Fuel Control (Only for California Spec.)) on page DI–249.

DTC No.	DTC Detecting Condition	Trouble Area
P1135 P1155	When heater operates, heater current exceeds 8 A (2 trip detection logic)	●Open or in heater circuit of A/F sensors (bank 1, 2 sensor 1) ●A/F sensors (bank 1, 2 sensor 1) heater ●ECM
	Heater current of 0.25 A or less when heater operates (2 trip detection logic)	

WIRING DIAGRAM

Refer to DTC P0125 (Insufficient Coolant Temp. for Closed Loop Fuel Control (Only for California Spec.)) on page DI–249.

INSPECTION PROCEDURE

HINT:

Read freeze frame data using TOYOTA hand–held tester or OBD II scan tool. Because freeze frame records the engine conditions when the malfunction is detected, when troubleshooting it is useful for determining whether the vehicle was running or stopped, the engine warmed up or not, the air–fuel ratio lean or rich, etc. at the time of the malfunction.

1	**Check voltage between terminal HAFR, HAFL of ECM connector and body ground.**

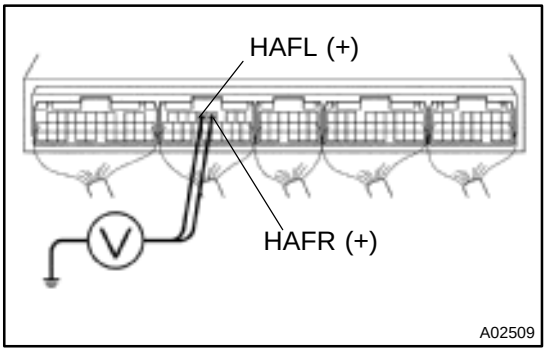

PREPARATION:

(a) Remove glove compartment (See page SF–73).

(b) Turn the ignition switch ON.

CHECK:

Measure voltage between terminals HAFR, HAFL of the ECM connector and body ground.

OK:

Voltage: 9 ~ 14 V

OK	**Check and replace ECM (See page IN–31).**

NG

2	Check resistance of A/F sensor heaters (bank 1, 2 sensor 1) (See page SF–68).

NG → Replace A/F sensors (bank 1, 2 sensor 1).

OK

Check and repair harness or connector between EFI main relay (Marking: EFI) and A/F sensors (bank 1, 2 sensor 1), and A/F sensors (bank 1, 2 sensor 1) and ECM (See page IN–31).

DI084–06

DTC	P1300	Igniter Circuit Malfunction

CIRCUIT DESCRIPTION

A DIS (Direct Ignition System) has been adopted. The DIS improves the ignition timing accuracy, reduces high–voltage loss, and enhances the overall reliability of the ignition system by eliminating the distributor. The DIS is a 2–cylinder simultaneous ignition system which ignites 2 cylinders simultaneously with one ignition coil. In the 2–cylinder simultaneous ignition system, each of the 2 spark plugs is connected to the end of the secondary winding. High voltage generated in the secondary winding is applied directly to the spark plugs. The sparks of the 2 spark plugs pass simultaneously from the center electrode to the ground electrode.

The ECM determines ignition timing and outputs the ignition signals (IGT) for each cylinder. Based on IGT signals, the igniter controls the primary ignition signals (IGC) for all ignition coils. At the same time, the igniter also sends an ignition confirmation signal (IGF) as a fail–safe measure to the ECM.

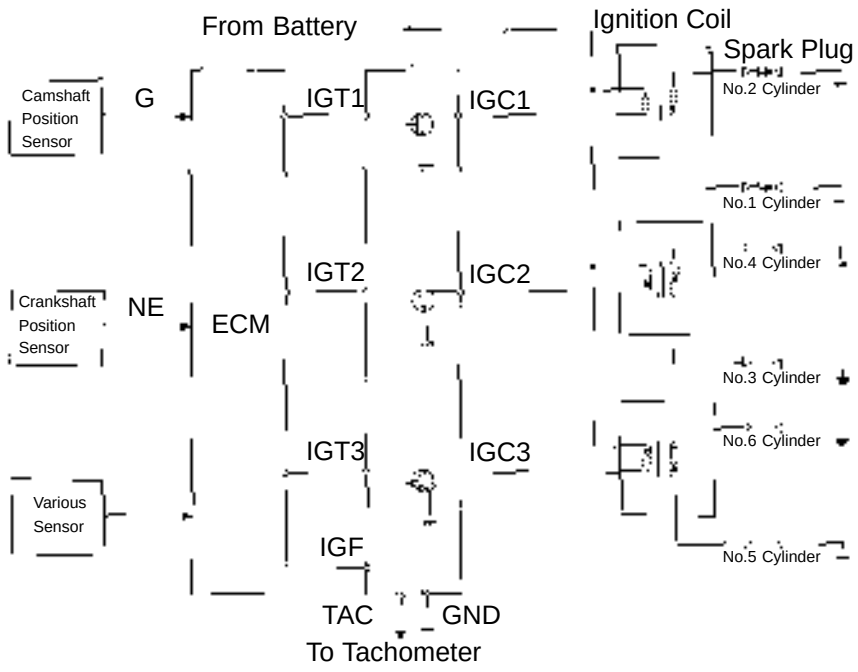

S00251

DTC No.	DTC Detecting Condition	Trouble Area
P1300	Condition (a) is repeated 3 times consecutively during 6 consecutively IGT signals while engine is running (a) IGF signal is not input to ECM for 2 or more ignitions	●Open or short in IGF or IGT circuit from igniter to ECM ●Igniter ●ECM

WIRING DIAGRAM

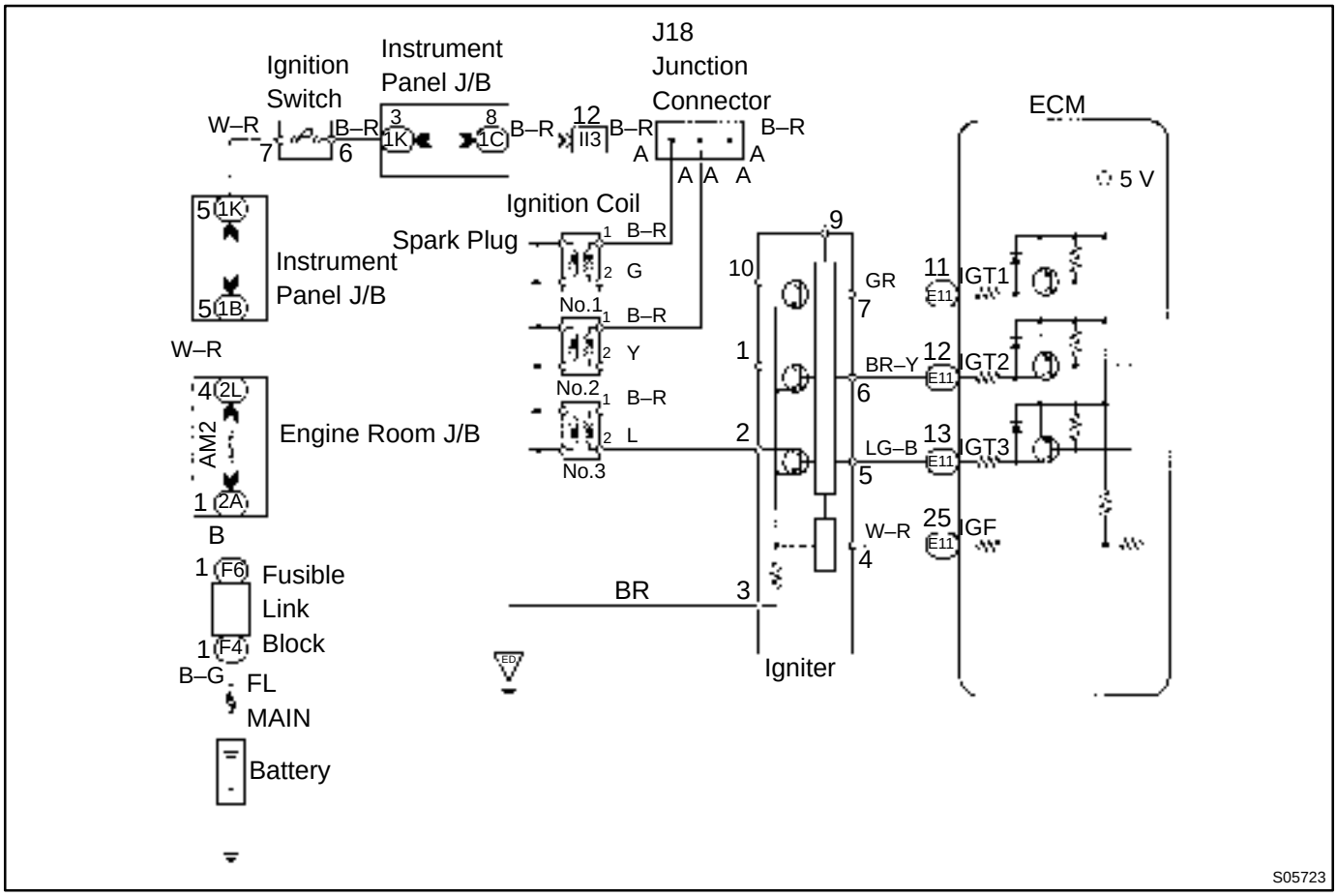

INSPECTION PROCEDURE

HINT:

Read freeze frame data using TOYOTA hand–held tester or OBD II scan tool. Because freeze frame records the engine conditions when the malfunction is detected, when troubleshooting it is useful for determining whether the vehicle was running or stopped, the engine warmed up or not, the air–fuel ratio lean or rich, etc. at the time of the malfunction.

1	**Check spark plug and spark of misfiring cylinder (See page DI–276).**

NG → **Go to step 4.**

OK

2	**Check for open and short in harness and connector in IGF signal circuit between ECM and igniter (See page IN–31).**

NG → **Repair or replace harness or connector.**

OK

3	**Disconnect igniter connector and check voltage between terminal IGF of ECM connector and body ground.**

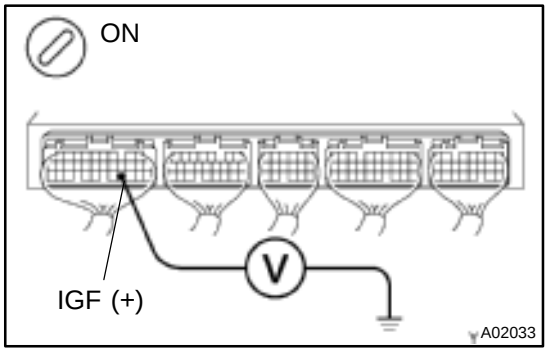

PREPARATION:

(a) Disconnect the igniter connector.
(b) Remove the glove compartment (See page SF–73).
(c) Turn the ignition switch ON.

CHECK:

Measure voltage between terminal IGF of the ECM connector and body ground.

OK:

Voltage: 4.5 ~ 5.5 V

OK → **Replace igniter.**

NG

Check and replace ECM (See page IN–31).

4	**Check for open and short in harness and connector in IGT 1 ~ 3 signal circuits between ECM and igniter (See page IN–31).**

NG → **Repair or replace harness or connector.**

OK

5	Check voltage between terminals IGT 1 ~ 3 of ECM connector and body ground.

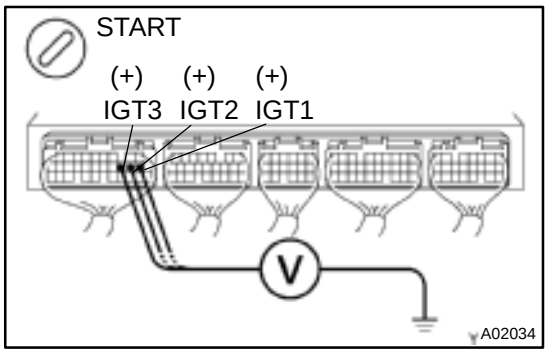

PREPARATION:
Remove the glove compartment (See page SF–73).
CHECK:
Measure voltage between terminals IGT 1 ~ 3 of the ECM connector and body ground when engine is cranked.
OK:
Voltage: More than 0.1 V and less than 4.5 V

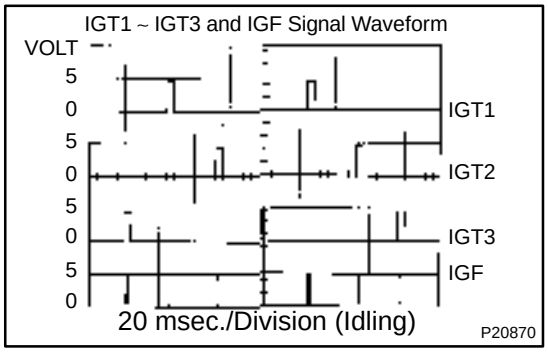

Reference INSPECTION USING OSCILLOSCOPE
During idling, check waveform between terminals IGT 1 ~ 3, IGF and E1 of ECM.
HINT:
The correct waveforms are as shown.

NG → **Check and replace ECM (See page IN–31).**

OK

6	Disconnect igniter connector and check voltage between terminals IGT 1 ~ 3 of ECM connector and body ground.

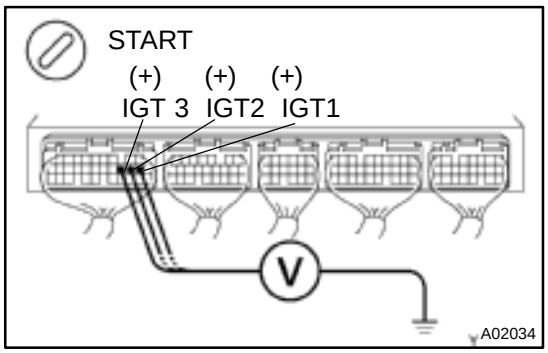

PREPARATION:
(a) Disconnect the igniter connector.
(b) Remove the glove compartment (See page SF–73).
CHECK:
Measure voltage between terminals IGT 1 ~ 3 of the ECM connector and body ground when engine is cranked.
OK:
Voltage: More than 0.1 V and less than 4.5 V

NG → **Check and replace ECM (See page IN–31).**

OK

7	**Check voltage between terminal 9 of igniter connector and body ground.**

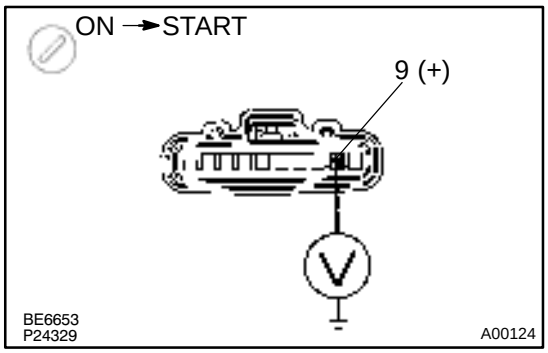

PREPARATION:
Disconnect the igniter connector.
CHECK:
Measure voltage between terminal 9 of igniter connector and body ground when ignition switch is turned to ”ON” and ”START” position.
OK:
Voltage: 9 ~ 14 V

NG → **Check and repair igniter power source circuit (See page IG–1).**

OK

8	**Check for open and short in harness and connector between ignition switch and ignition coil, and ignition coil and igniter (See page IN–31).**

NG → **Repair or replace harness or connector.**

OK

9	**Check ignition coil (See page IG–1).**

NG → **Replace ignition coil.**

OK

10	**Check EFI main relay (Marking: EFI) (See page SF–53).**

NG → **Replace EFI main relay (Marking: EFI).**

OK

Replace igniter.

DI085–06

DTC	P1335	Crankshaft Position Sensor Circuit Malfunction (during engine running)

CIRCUIT DESCRIPTION

Refer to DTC P0335 (Crankshaft Position Sensor ”A” Circuit Malfunction) on page DI–287.

DTC No.	DTC Detecting Condition	Trouble Area
P1335	No crankshaft position sensor signal to ECM with engine speed 1,000 rpm or more	●Open or short in crankshaft position sensor circuit ●Crankshaft position sensor ●Starter ●ECM

WIRING DIAGRAM

Refer to DTC P0335 (Crankshaft Position Sensor ”A” Circuit Malfunction) on page DI–287.

INSPECTION PROCEDURE

Read freeze frame data using TOYOTA hand–held tester or OBD II scan tool. Because freeze frame records the engine conditions when the malfunction is detected, when troubleshooting it is useful for determining whether the vehicle was running or stopped, the engine warmed up or not, the air–fuel ratio lean or rich, etc. at the time of the malfunction.

Refer to DTC P0335 (Crankshaft Position Sensor ”A” Circuit Malfunction) on page DI–287.

DI086–06

DTC	P1410	EGR Valve Position Sensor Circuit Malfunction

CIRCUIT DESCRIPTION

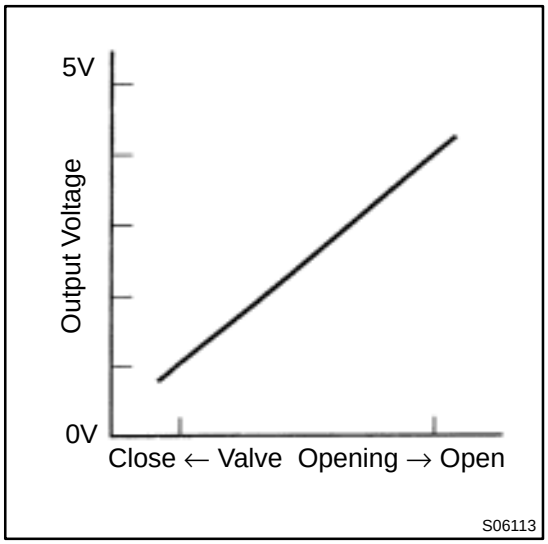

The EGR valve position sensor is mounted on the EGR valve and detects the lift amount of EGR valve. The lift amount of EGR valve which is detected by the EGR valve position sensor provides feedback to the ECM to control the lift amount of EGR valve in response to engine operating conditions.

DTC No.	DTC Detecting Condition	Trouble Area
P1410	Open or short in EGR valve position sensor circuit (2 trip detection logic)	●Open or short in EGR valve position sensor circuit ●EGR valve position sensor ●ECM

WIRING DIAGRAM

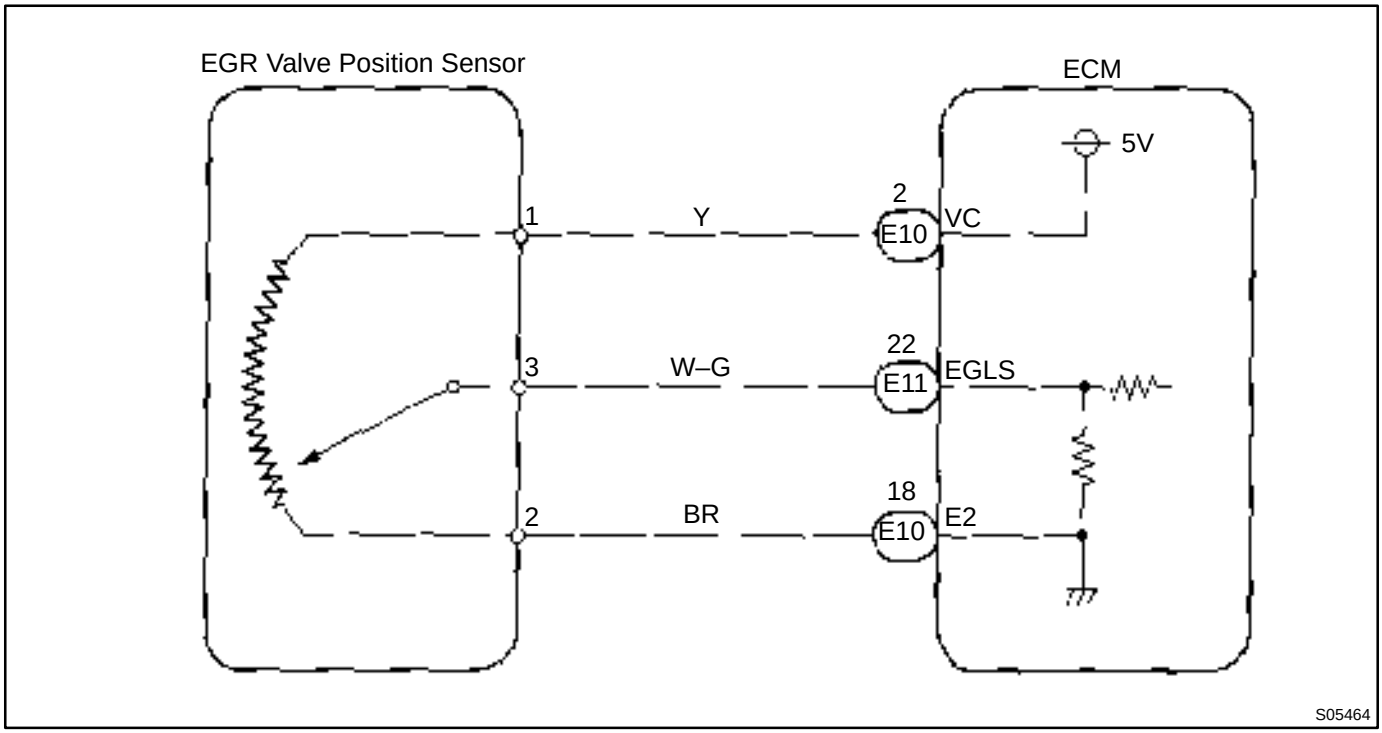

INSPECTION PROCEDURE

HINT:

- If DTCs ”P0110” (Intake Air Temp. Circuit Malfunction), ”P0115” (Engine Coolant Temp. Circuit Malfunction), ”P0120” (Throttle/Pedal Position/Switch ”A” Circuit Malfunction), ”P1410” (EGR Valve Position Sensor Circuit Malfunction) are output simultaneously, E2 (Sensor Ground) may be open.
- Read freeze frame data using TOYOTA hand–held tester or OBD II scan tool. Because freeze frame records the engine conditions when the malfunction is detected, when troubleshooting it is useful for determining whether the vehicle was running or stopped, the engine warmed up or not, the air–fuel ratio lean or rich, etc. at the time of the malfunction.

1	**Check voltage between terminal VC of wire harness side connector and body ground.**

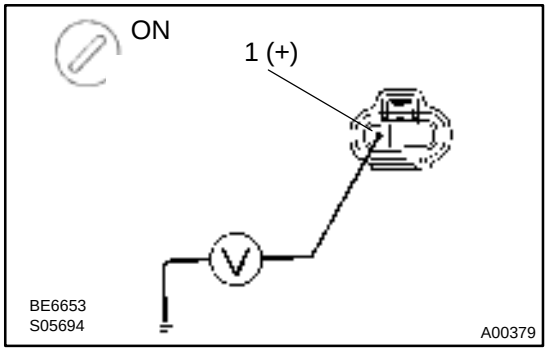

PREPARATION:

(a) Disconnect the vacuum hose from EGR valve.
(b) Disconnect the EGR valve position sensor connector.
(c) Turn the ignition switch ON.

CHECK:

Measure voltage between terminal 1 of wire harness side connector and body ground.

OK:

Voltage: 4.5 ~ 5.5 V

NG → **Go to step 4.**

OK

2	**Check EGR valve position sensor.**

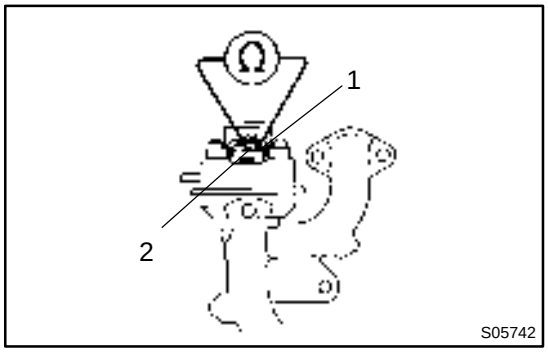

PREPARATION:

Disconnect the EGR valve position sensor connector.

CHECK:

Measure resistance between terminals 1 (VC) and 2 (E2) of EGR valve position sensor.

OK:

Resistance: 1.5 ~ 4.3 kΩ

NG → **Replace EGR valve position sensor.**

OK

3	Check voltage between terminals EGLS and E2 of ECM connectors.

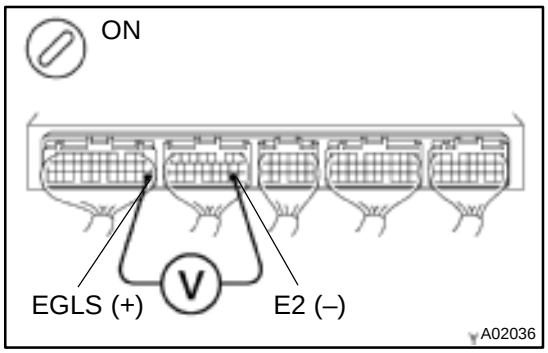

PREPARATION:

(a) Disconnect the vacuum hose from EGR valve.
(b) Connect the hand–held vacuum pump to EGR valve.
(c) Remove the glove compartment (See page SF–73).
(d) Turn the ignition switch ON.

CHECK:

Measure voltage between terminals EGLS and E2 of the ECM connectors.

OK:

Condition		Voltage
EGR valve	Vacuum	
Fully closed	0 kPa (0 mmHg, 0 in.Hg)	0.4 ~ 1.6 V
Fully open	17.3 kPa (130 mmHg, 5.12 in.Hg)	3.2 ~ 5.1 V

NG → **Check for open and short in harness and connector between ECM and EGR valve position sensor (EGLS or E2 line).**

OK →

Check and replace ECM (See page IN–31).

4	Check voltage between terminals VC and E2 of ECM connector.

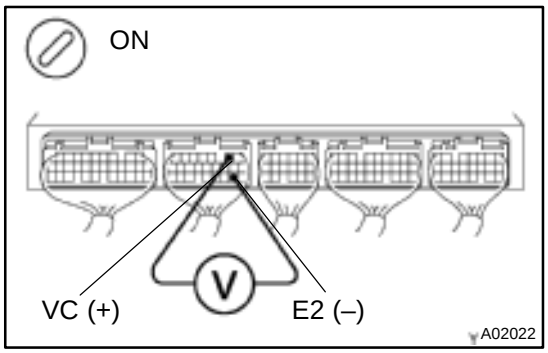

PREPARATION:

(a) Remove the glove compartment (See page SF–73).

(b) Turn the ignition switch ON.

CHECK:

Measure voltage between terminals VC and E2 of the ECM connector.

OK:

Voltage: 4.5 ~ 5.5 V

NG → **Check and replace ECM (See page IN–31).**

OK

Check for open and short in harness and connector between ECM and EGR valve position sensor (VC line).

DI087–06

DTC	P1411	EGR Valve Position Sensor Circuit Range/Performance Problem

CIRCUIT DESCRIPTION

Refer to DTC P1410 (EGR Valve Position Sensor Circuit Malfunction) on page DI–358.

DTC No.	DTC Detecting Condition	Trouble Area
P1411	Conditions (a) and (b) continue for 500 msec. or more: (2 trip detection logic) (a) Engine Coolant Temp. < 5°C (41°F) (b) EGLS ~ 1.65 V or EGLS < 0.35 V	●EGR valve position sensor

INSPECTION PROCEDURE

HINT:

Read freeze frame data using TOYOTA hand–held tester or OBD II scan tool. Because freeze frame records the engine conditions when the malfunction is detected, when troubleshooting it is useful for determining whether the vehicle was running or stopped, the engine warmed up or not, the air–fuel ratio lean or rich, etc. at the time of the malfunction.

1	Are there any other codes (besides DTC P1411) being output?

YES → Go to relevant DTC chart.

NO →

Replace EGR valve position sensor.

DI088–06

DTC	P1520	Stop Light Switch Signal Malfunction (Only for A/T)

CIRCUIT DESCRIPTION

This signal is used to detect when the brakes have been applied. The STP signal voltage is the same as the voltage supplied to the stop lights.
The STP signal is used mainly to control the fuel cut–off engine speed (The fuel cut–off engine speed is reduced slightly when the vehicle is braking.).

DTC No.	DTC Detecting Condition	Trouble Area
P1520	Stop light switch does not turn off when repeating the driving at 30 km or more 10 times or more after depressing brake (2 trip detection logic)	●Short in stop light switch signal circuit ●Stop light switch ●ECM

WIRING DIAGRAM

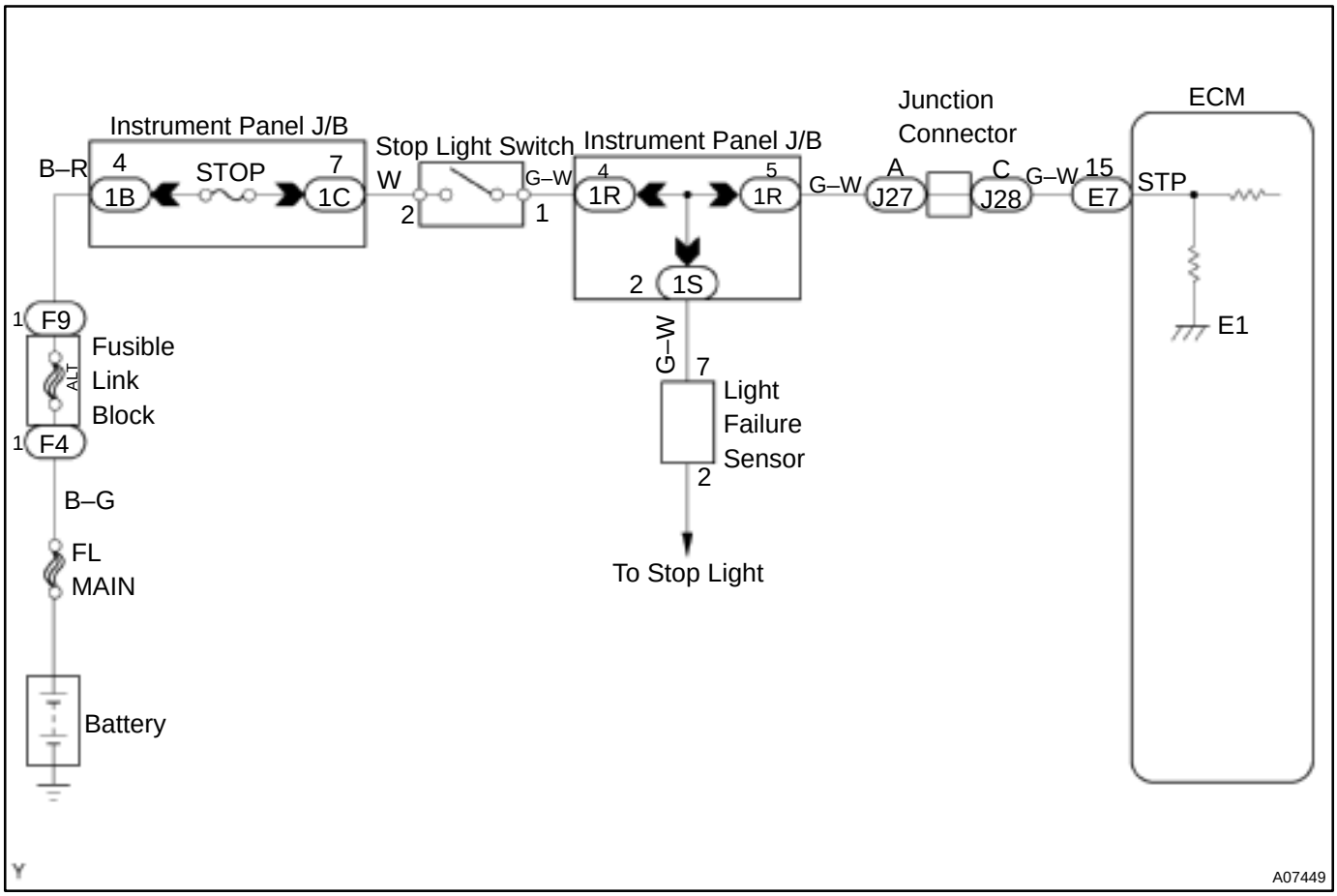

INSPECTION PROCEDURE

HINT:

Read freeze frame data using TOYOTA hand–held tester or OBD II scan tool. Because freeze frame records the engine conditions when the malfunction is detected, when troubleshooting it is useful for determining whether the vehicle was running or stopped, the engine warmed up or not, the air–fuel ratio lean or rich, etc. at the time of the malfunction.

1	**Check operation of stop light.**

CHECK:

Check if the stop lights go on and off normally when the brake pedal is operated and released.

NG → **Check and repair stop light circuit.**

OK ↓

2	**Check STP signal.**

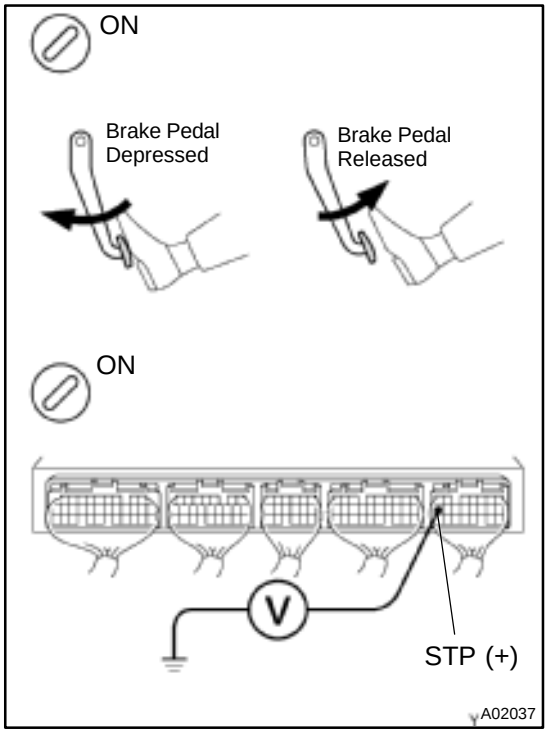

When using TOYOTA hand–held tester:

PREPARATION:

(a) Connect the TOYOTA hand–held tester to the DLC3.

(b) Turn the ignition switch ON and push the TOYOTA hand–held tester main switch ON.

CHECK:

Read the STP signal on the TOYOTA hand–held tester.

OK:

Brake pedal is depressed: STP ..... ON

Brake pedal is released: STP ..... OFF

When not using TOYOTA hand–held tester:

PREPARATION:

Turn the ignition switch ON.

CHECK:

Check voltage between terminal STP of the ECM connector and body ground.

OK:

Brake pedal	Voltage
Depressed	7.5 ~ 14 V
Released	Below 1.5 V

OK → **Check for intermittent problems (See page DI–197).**

NG ↓

3	**Check harness and connector between ECM and stop light switch (See page IN–31).**

NG → **Repair or replace harness or connector.**

OK

Check and replace ECM (See page IN–31).

DI089–06

DTC	P1600	ECM BATT Malfunction

CIRCUIT DESCRIPTION

Battery positive voltage is supplied to terminal BATT of the ECM even when the ignition switch is OFF for use by the DTC memory and air–fuel ratio adaptive control value memory, etc.

DTC No.	DTC Detecting Condition	Trouble Area
P1600	Open in back up power source circuit	●Open in back up power source circuit ●ECM

HINT:

If DTC P1600 appear, the ECM does not store another DTC.

WIRING DIAGRAM

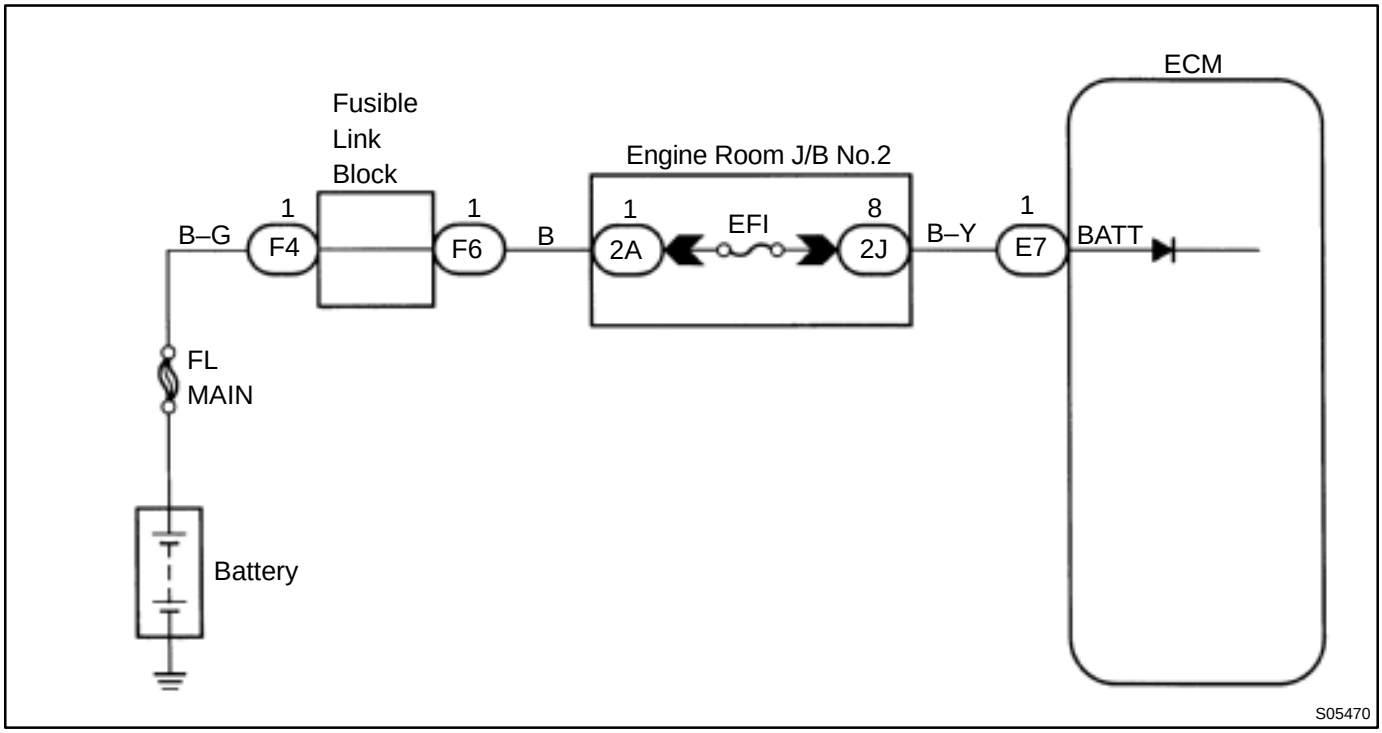

INSPECTION PROCEDURE

HINT:

Read freeze frame data using TOYOTA hand–held tester or OBD II scan tool. Because free frame records the engine conditions when the malfunction is detected, when troubleshooting it is useful for determining whether the vehicle was running or stopped, the engine warmed up or not, the air–fuel ratio lean or rich, etc. at the time of the malfunction.

1	Check voltage between terminal BATT of ECM connector and body ground.

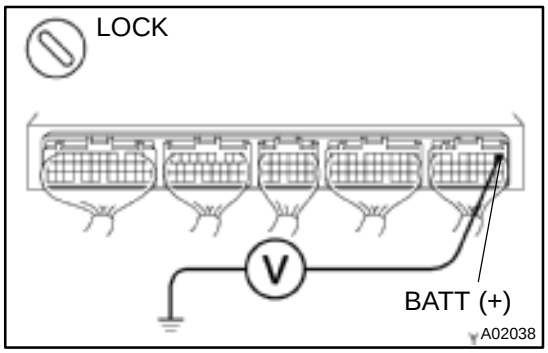

PREPARATION:
Remove the glove compartment (See page SF–73).
CHECK:
Measure voltage between terminal BATT of the ECM connector and body ground.
OK:
Voltage: 9 ~ 14 V

OK → **Check and replace ECM (See page IN–31).**

NG

2	Check EFI fuse.

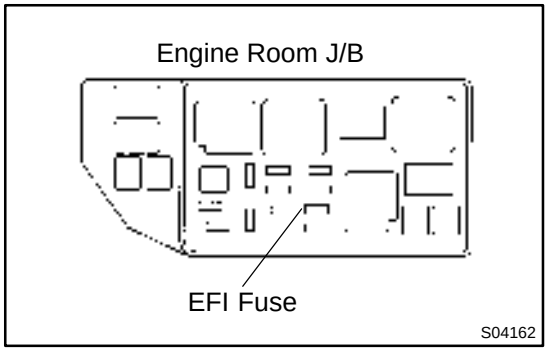

PREPARATION:
Remove the EFI fuse from the engine room J/B.
CHECK:
Check continuity of EFI fuse.
OK:
Continuity

NG → **Check for short in all harness and components connected to EFI fuse.**

OK

Check and repair harness or connector between battery and EFI fuse, and EFI fuse and ECM (See page IN–31).

DI08A–06

DTC	P1780	Park/Neutral Position Switch Malfunction

CIRCUIT DESCRIPTION

The park/neutral position switch go on when the shift lever is in the N or P shift position. When it goes on terminal NSW of the ECM is grounded to body ground via the starter relay, thus the terminal NSW voltage becomes 0V. When the shift lever is in the D, 2, L or R position, the park/neutral position switch goes off, so the voltage of ECM. Terminal NSW becomes battery voltage, the voltage of the ECM internal power source. If the shift lever is moved from the N position to the D position, this signal is used for air–fuel ratio correction and for idle speed control (estimated control), etc.

DTC No.	DTC Detecting Condition	Trouble Area
P1780	2 or more switches are ON simultaneously for ”N”, ”2”, ”L” and ”R” positions (2 trip detection logic)	●Short in park/neutral position switch circuit ●Park/neutral position switch ●ECM
	When driving under conditions (a) and (b) for 30 sec. or more the park/neutral position switch is ON (N position): (2 trip detection logic) (a) Vehicle speed: 70 km/h (44 mph) or more (b) Engine speed: 1,500 ～ NE and 2,500 rpm	

HINT:
After confirming DTC P1780, use the TOYOTA hand–held tester to confirm the PNP switch signal from ”CURRENT DATA”.

WIRING DIAGRAM

Refer to DTC P1780 on page DI–479.

INSPECTION PROCEDURE

Refer to DTC P1780 (Park/Neutral Position Switch Malfunction) on page DI–479.
HINT:
Read freeze frame data using TOYOTA hand–held tester or OBD II scan tool. because freeze frame records the engine conditions when the malfunction is detected, when troubleshooting it is useful for determining whether the vehicle was running or stopped, the engine warmed up or not, the air–fuel ratio lean or rich, etc. at the time of the malfunction.

DI4DU–01

ECM Power Source Circuit

CIRCUIT INSPECTION

When the ignition switch is turned on, battery positive voltage is applied to terminal IGSW of the ECM and the EFI main relay (Marking: EFI) control circuit in the ECM sends a signal to terminal MREL of the ECM switching on the EFI main relay.

This signal causes current to flow to the coil, closing the contacts of the EFI, main relay and supplying power to terminals +B of the ECM.

If the ignition switch is turned off, the ECM continues to switch on the EFI main relay for a maximum of 2 seconds for the initial setting of the IAC valve.

WIRING DIAGRAM

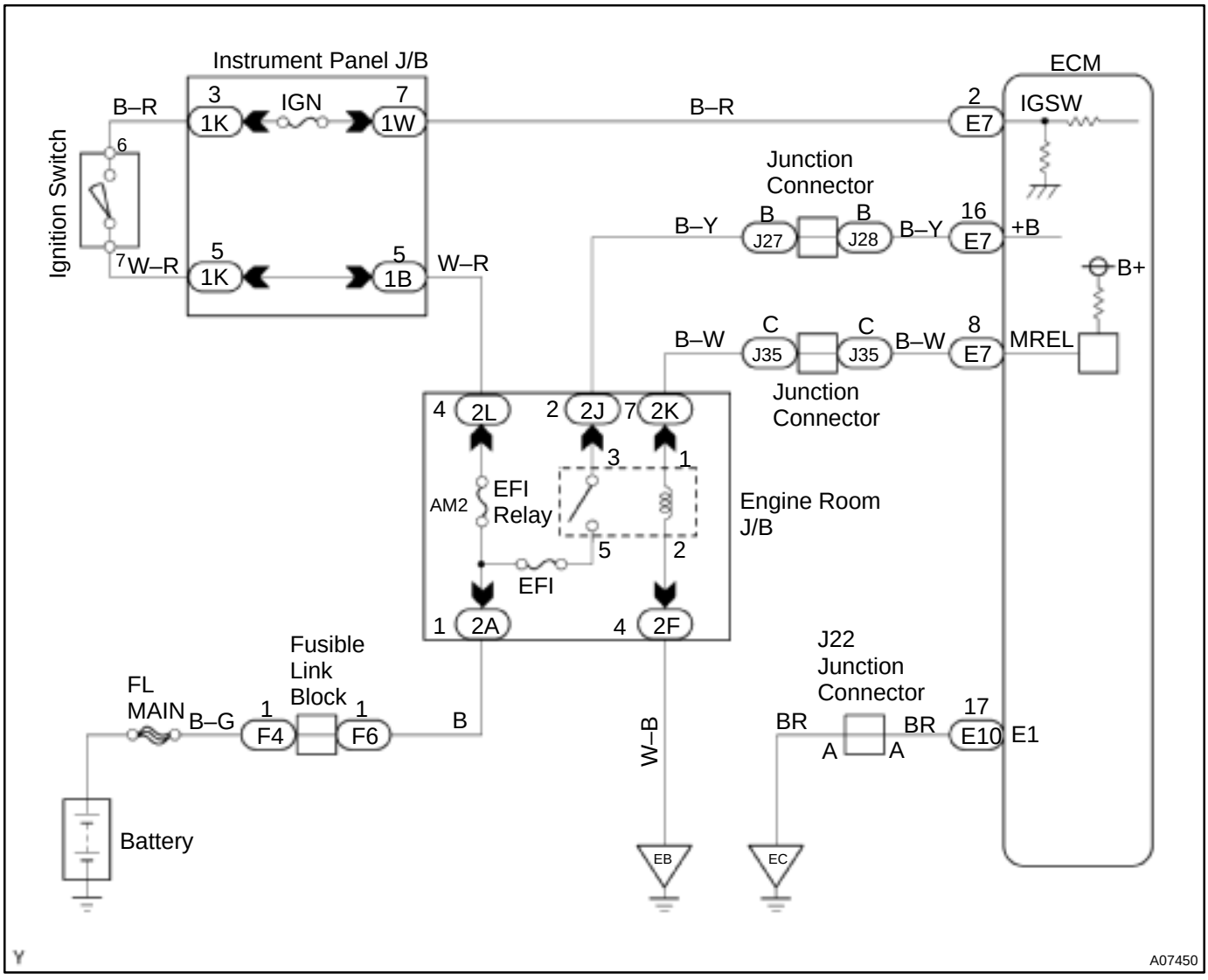

INSPECTION PROCEDURE

1	**Check voltage between terminals +B and E1 or ECM connectors.**

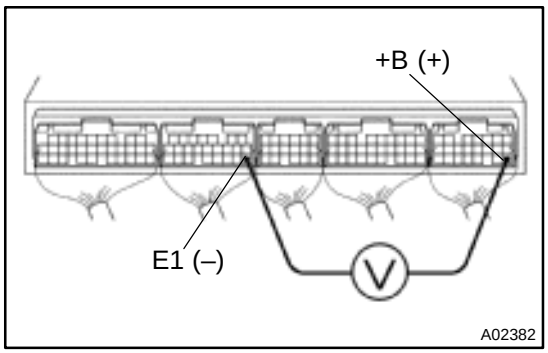

PREPARATION:

(a) Remove the glove compartment (See page SF–73).

(b) Turn the ignition switch ON.

CHECK:

Measure voltage between terminals +B and E1 of the ECM connectors.

OK:

Voltage: 9 ~ 14 V

OK	**Proceed to next circuit inspection shown on problem symptoms table (See page DI–221).**

NG

2	**Check for open in harness and connector between terminals E1 of ECM and body ground (See page IN–31).**

NG	**Repair or replace harness or connector.**

OK

3	**Check voltage between terminal IGSW of ECM and body ground.**

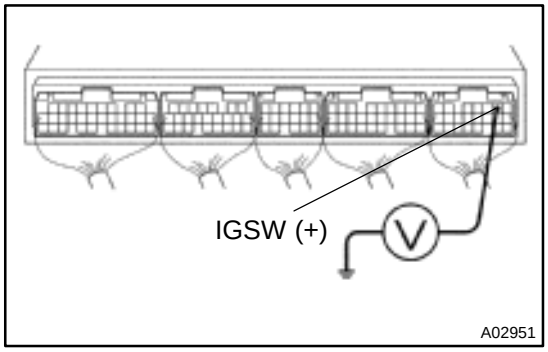

PREPARATION:

Turn the ignition switch ON.

CHECK:

Measure voltage between terminal IGSW of ECM connectors and body ground.

OK:

Voltage: 9 ~ 14 V

OK	**Go to step 6.**

NG

4	**Check EFI fuse.**

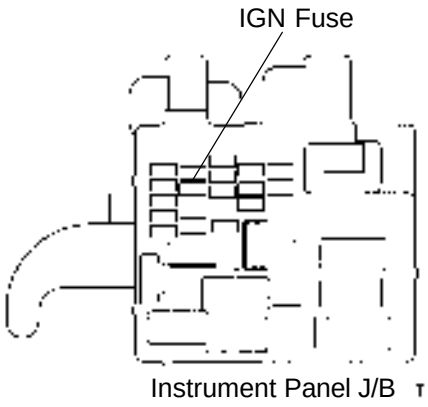

PREPARATION:
Remove IGN fuse from instrument panel J/B.
CHECK:
Check continuity of IGN fuse.
OK:

Continuity

NG → **Check for short in all the harness and components connected to IGN fuse (See attached wiring diagram).**

OK

5	**Check ignition switch (See page BE–13).**

NG → **Replace ignition switch.**

OK

Check and repair harness and connector between battery and ignition switch, and ignition switch and ECM.

6	**Check voltage between terminal MREL of ECM and body ground.**

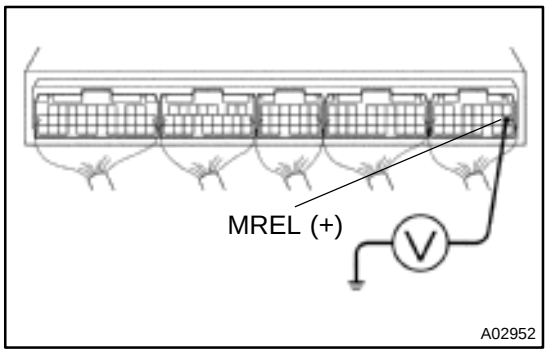

PREPARATION:
Turn the ignition switch ON.
CHECK:
Measure voltage between terminal MREL of the ECM connectors and body ground.
OK:
Voltage: 9 ~ 14 V

NG → **Check and replace ECM (See page DI–197).**

OK

7	**Check EFI No.1 fuse of engine room J/B.**

NG → **Check for short in all the harness and components connected to EFI No.1 fuse (See attached wiring diagram).**

OK

8	**Check EFI main relay (Marking: EFI) (See page SF–53).**

NG → **Replace EFI main relay (Marking: EFI).**

OK

9	Check for open and short in harness and connector between terminal MREL of ECM and body ground (See page IN–31).

NG → Repair or harness or connector.

OK →

Check and repair harness or connector between EFI No.1 fuse and battery (See page IN–31).

Fuel Pump Control Circuit

CIRCUIT DESCRIPTION

In the diagram below, when the engine is cranked, current flows from terminal ST of the ignition switch to the starter relay coil and also current flows to terminal STA of ECM (STA signal).
When the STA signal and NE signal are input to the ECM, Tr is turned ON, current flows to coil of the circuit opening relay, the relay switches on, power is supplied to the fuel pump and the fuel pump operates.
While the NE signal is generated (engine running), the ECM keeps Tr ON (circuit opening relay ON) and the fuel pump also keeps operating.

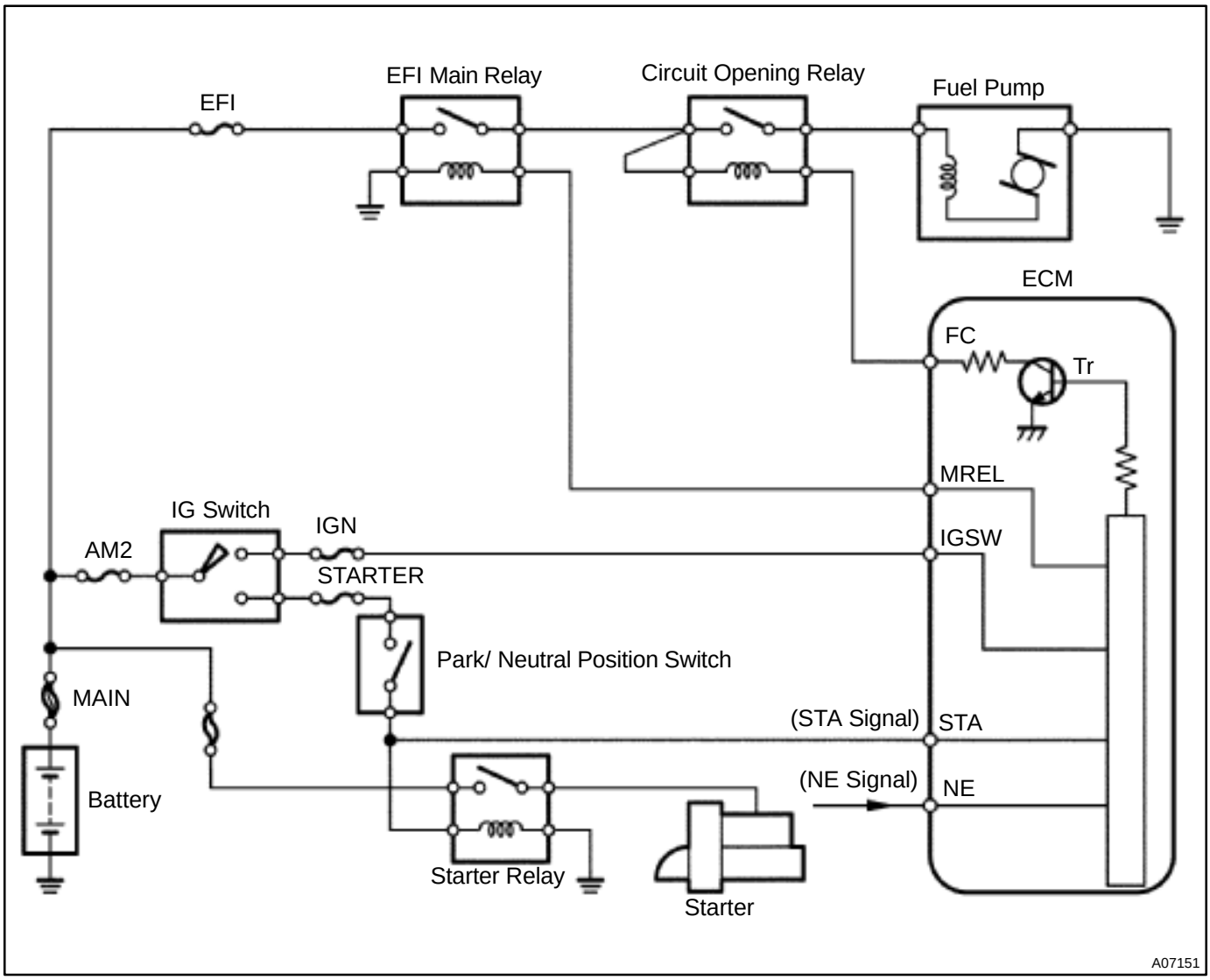

WIRING DIAGRAM

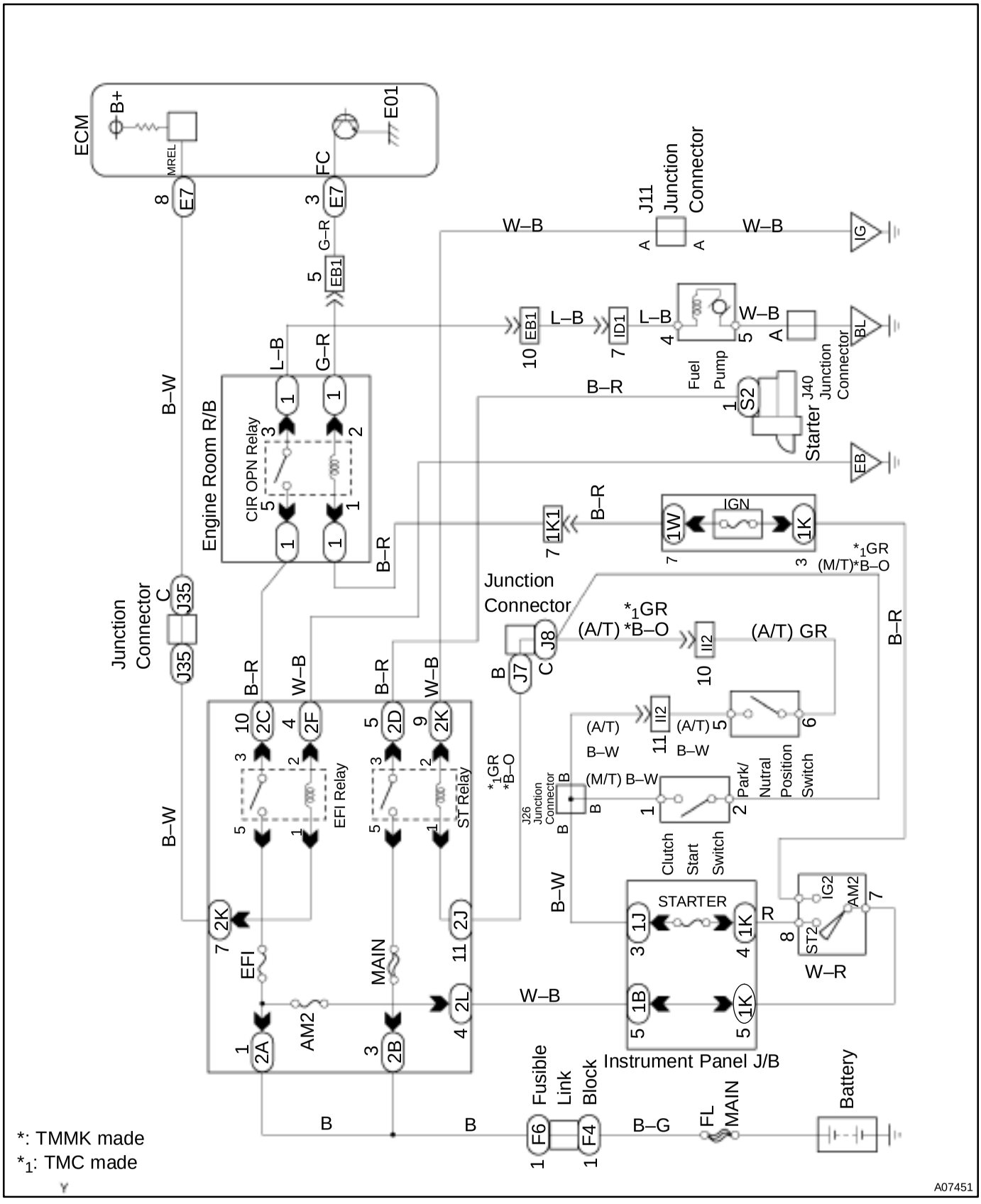

INSPECTION PROCEDURE
TOYOTA hand–held tester

1	**Connect TOYOTA hand–held tester and check operation of fuel pump.**

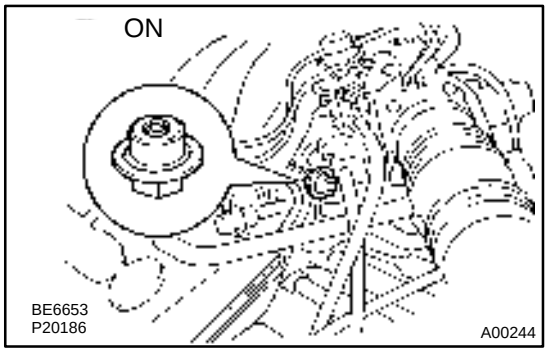

PREPARATION:

(a) Connect the TOYOTA hand–held tester to the DLC3.
(b) Turn the ignition switch ON and push the TOYOTA hand–held tester main switch ON.
(c) Use ACTIVE TEST mode to operate the fuel pump.

CHECK:

Check that pulsation damper screw rises up when fuel pump is on by TOYOTA hand–held tester.

OK:

The pulsation damper screw rises up.

OK → **Check for starter signal circuit (See page DI–384).**

NG

2	**Check for ECM power source circuit (See page DI–369).**

NG → **Repair or replace.**

OK

3	**Check circuit opening relay (See page SF–54).**

NG → **Replace circuit opening relay.**

OK

4	**Check voltage between terminal FC of ECM and body ground.**

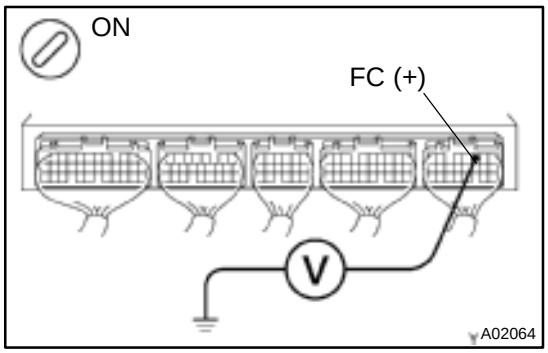

PREPARATION:

(a) Remove the glove compartment (See page SF–73).

(b) Turn ignition switch ON.

CHECK:

Measure voltage between terminal FC of ECM and body ground.

OK:

Voltage 9 – 14 V

NG → **Check for open in harness and connector between EFI main relay (Marking: EFI) and circuit opening relay, circuit opening relay and ECM.**

OK

5	**Check fuel pump (See page SF–6).**

NG → **Repair or replace fuel pump.**

OK

6	**Check for open in harness and connector between circuit opening relay and fuel pump, and fuel pump and body ground (See page IN–31).**

NG → **Repair or replace harness or connector.**

OK

Check and replace ECM (See page IN–31).

OBD II scan tool (excluding TOYOTA hand–held tester)

1	**Check operation of fuel pump.**

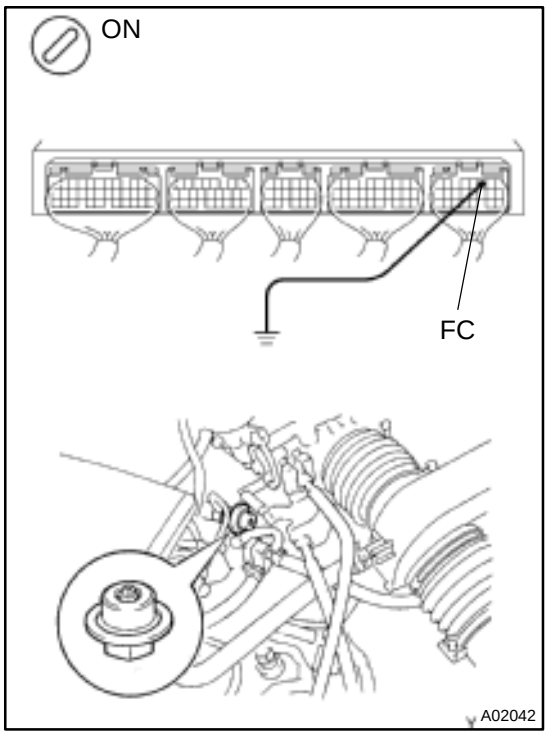

PREPARATION:

(a) Remove the glove compartment (See page SF–73).

(b) Turn the ignition switch ON.

CHECK:

(a) Connect between terminal FC of the ECM connector and body ground.

(b) Check that pulsation damper screw rises up when connect between terminal FC of the ECM and body ground.

OK:

The pulsation damper screw rises up.

OK → **Check for starter signal circuit (See page DI–384).**

NG

2	**Check for ECM power source circuit (See page DI–369).**

NG → **Repair or replace.**

OK

3	**Check circuit opening relay (See page SF–54).**

NG → **Replace circuit opening relay.**

OK

4	**Check voltage between terminal FC of ECM and body ground.**

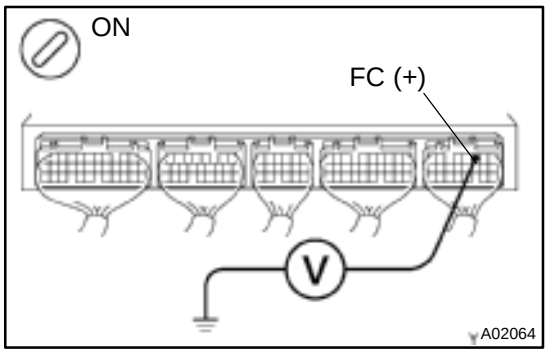

PREPARATION:

(a) Remove the glove compartment (See page SF–73).

(b) Turn ignition switch ON.

CHECK:

Measure voltage between terminal FC of ECM and body ground.

OK:

Voltage 9 – 14 V

NG → **Check for open in harness and connector between EFI main relay (Marking: EFI) and circuit opening relay, circuit opening relay and ECM.**

OK

5	**Check fuel pump (See page SF–6).**

NG → **Repair or replace fuel pump.**

OK

6	**Check for open in harness and connector between circuit opening relay and fuel pump, and fuel pump and body ground (See page IN–31).**

NG → **Repair or replace harness or connector.**

OK

Check and replace ECM (See page IN–31).

IACV Control VSV Circuit

CIRCUIT DESCRIPTION

This circuit opens and closes the IACV (Intake Air Control Valve) in response to the engine load in order to increase the intake efficiency (ACIS: Acoustic Control Induction System).
When the engine speed is 3,700 rpm or less and the throttle valve opening angle is 60° or more, the ECM turns the VSV ON and closes the IACV. At all other times, the VSV is OFF, so the IACV is open.

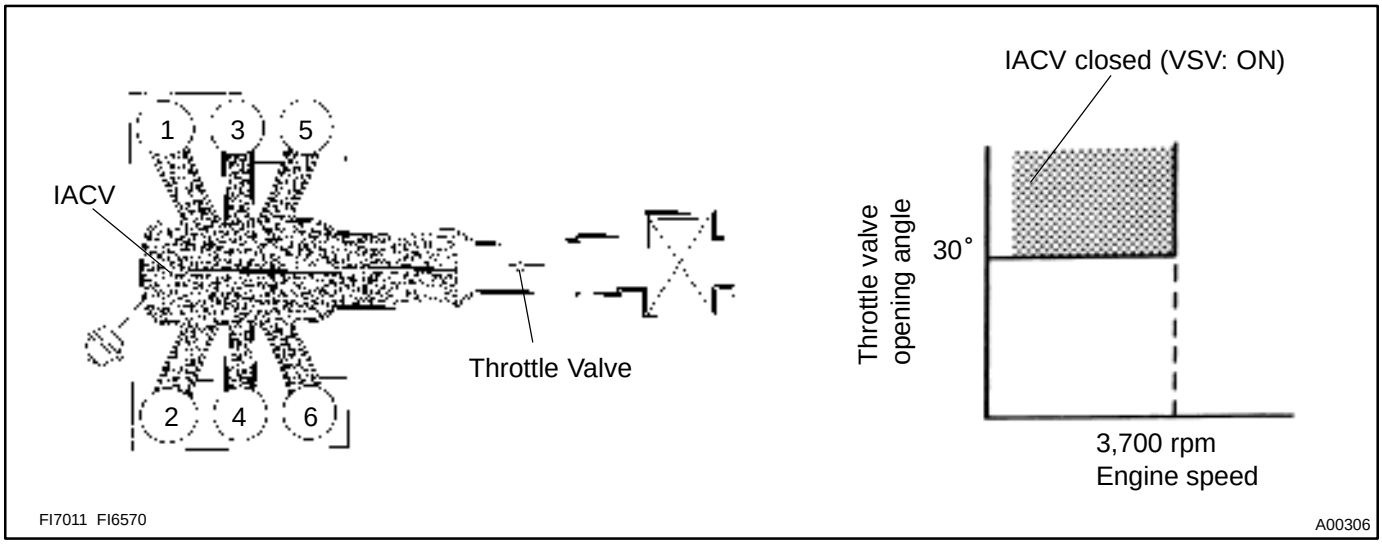

WIRING DIAGRAM

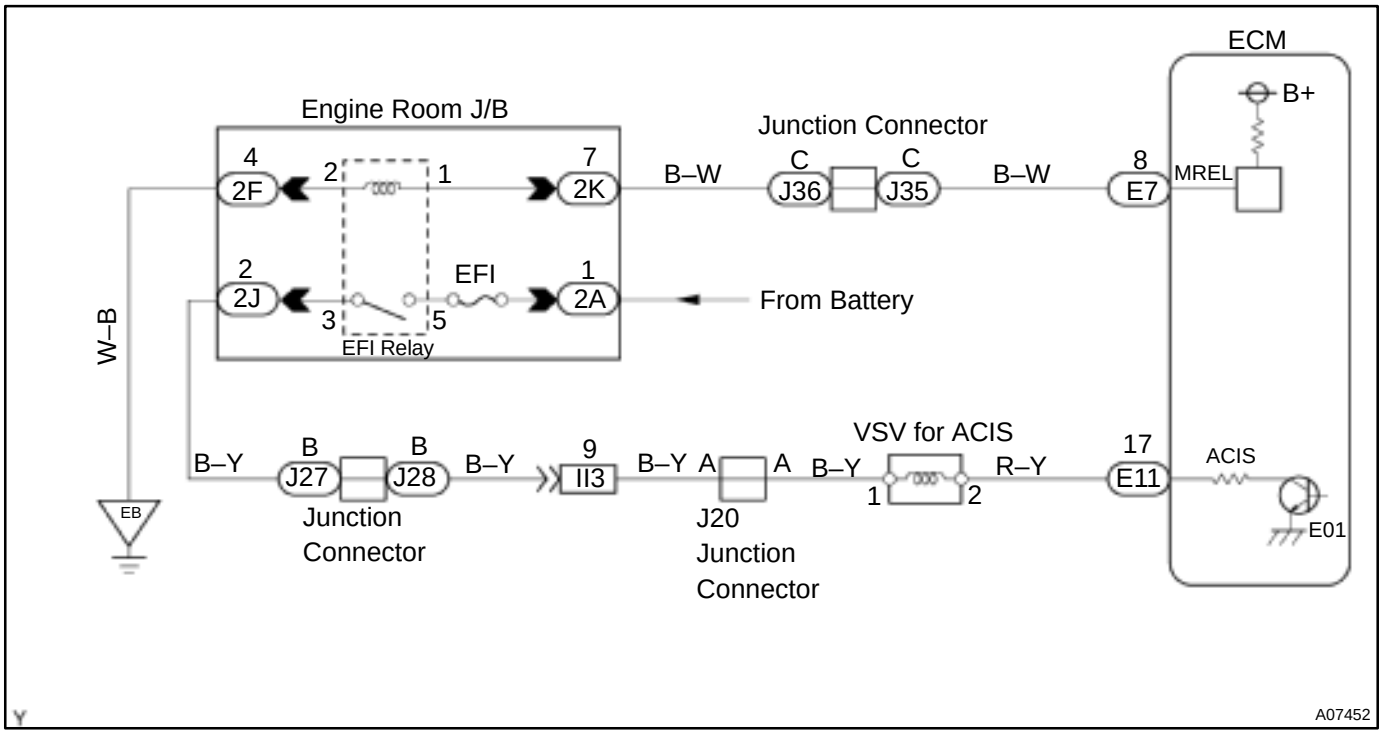

INSPECTION PROCEDURE
TOYOTA hand–held tester

1	**Connect TOYOTA hand–held tester and check operation of VSV for ACIS.**

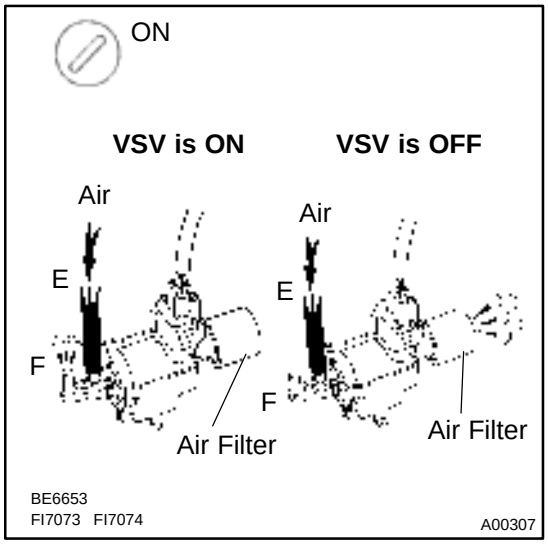

PREPARATION:

(a) Remove the fuse cover on the instrument panel.
(b) Connect the TOYOTA hand–held tester to the DLC3.
(c) Turn the ignition switch ON and push the TOYOTA hand–held tester main switch ON.
(d) Select the ACTIVE TEST mode on the TOYOTA hand–held tester.

CHECK:

Check operation of VSV when VSV is operated by the TOYOTA hand–held tester.

OK:

VSV is ON:
Air from pipe E is flowing out through pipe F.
VSV is OFF:
Air from pipe E is flowing out through the air filter.

OK → **Check for vacuum tank (See page SF–51).**

NG

2	**Check VSV for ACIS (See page SF–60).**

NG → **Replace VSV for ACIS.**

OK

3	**Check for open and short in harness and connector between EFI main relay (Marking: EFI) and ECM (See page IN–31).**

NG → **Repair or replace harness or connector.**

OK

Check and replace ECM (See page IN–31).

OBD II scan tool (excluding TOYOTA hand–held tester)

1	**Check VSV for ACIS (See page SF–60).**

NG → **Replace VSV for ACIS.**

OK

2	**Check voltage between terminal ACIS of ECM connector and body ground.**

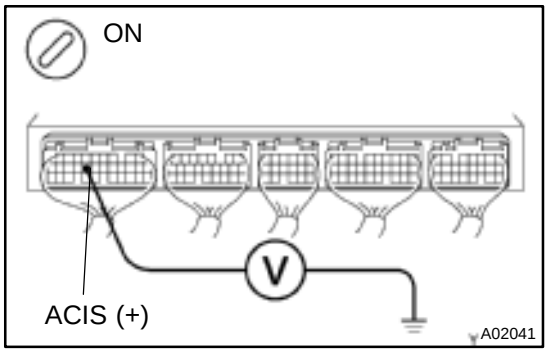

PREPARATION:

(a) Remove the glove compartment (See page SF–73).

(b) Turn the ignition switch ON.

CHECK:

Measure voltage between terminal ACIS of the ECM connector and body ground.

OK:

Voltage: 9 ~ 14 V

NG → **Check for open and short in harness and connector between EFI main relay (Marking: EFI) and ECM (See page IN–31).**

OK

3	Check for vacuum tank (See page SF–60).

NG → Repair or replace.

OK

Check and replace ECM (See page IN–31).

DI08B–06

Starter Signal Circuit

CIRCUIT DESCRIPTION

When the engine is cranked, the intake air flow is slow, so fuel vaporization is poor. A rich mixture is therefore necessary in order to achieve good startability. While the engine is being cranked, the battery positive voltage is applied to terminal STA of the ECM. The starter signal is mainly used to increase the fuel injection volume for the starting injection control and after–start injection control.

WIRING DIAGRAM

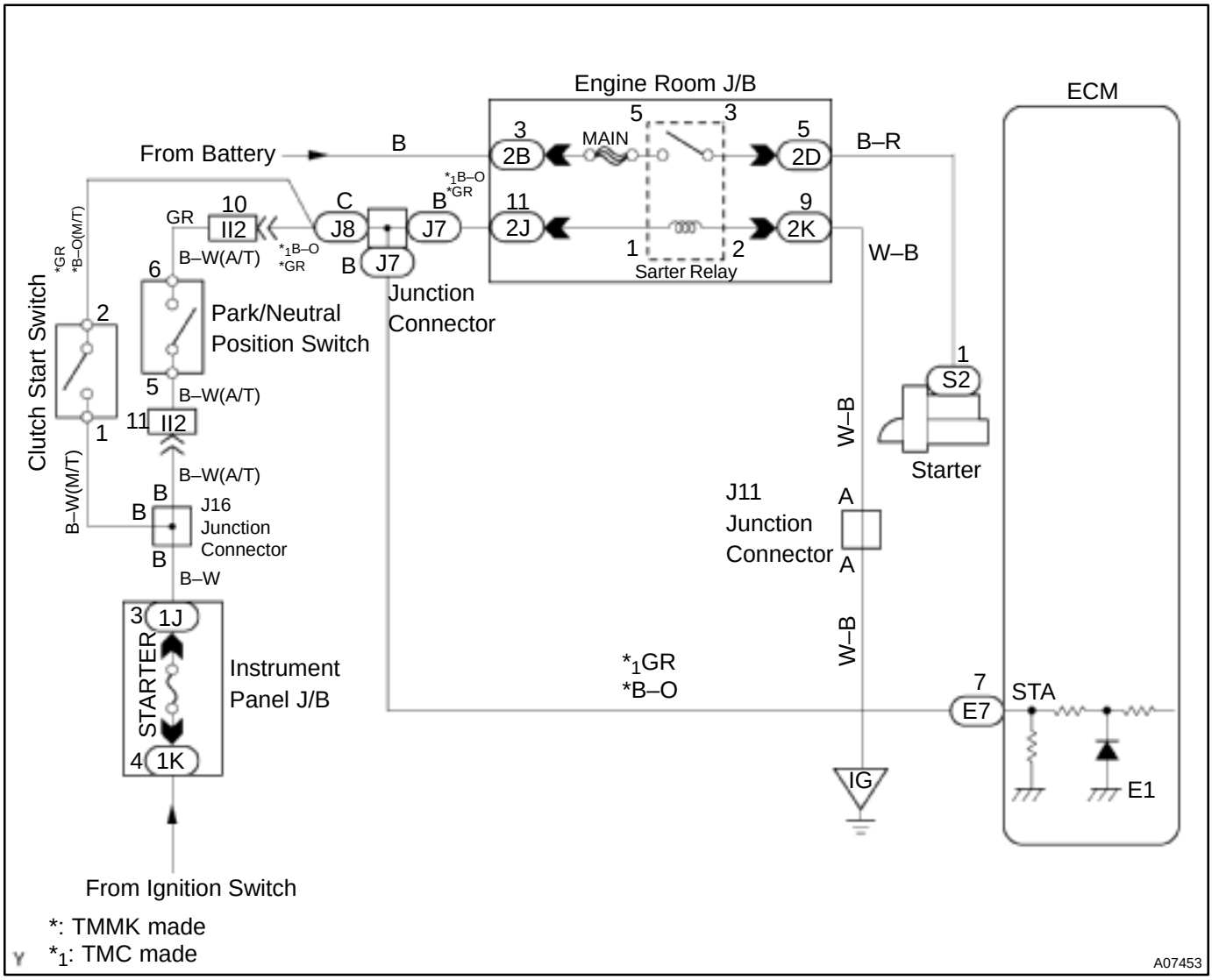

INSPECTION PROCEDURE

HINT:

This diagnostic chart is based on the premise that the engine is cranked normally. If the engine is not cranked, proceed to the problem symptoms table on page DI–221.

TOYOTA hand–held tester

1	**Connect TOYOTA hand–held tester, and check STA signal.**

PREPARATION:

(a) Connect the TOYOTA hand–held tester to the DLC3.

(b) Turn the ignition switch ON and push the TOYOTA hand–held tester main switch ON.

CHECK:

Read STA signal on the TOYOTA hand–held tester while starter operates.

OK:

Ignition switch position	ON	START
STA signal	OFF	ON

OK → **Proceed to next circuit inspection shown on problem symptom table (See page DI–221).**

NG

2	**Check for open in harness and connector between ECM and starter relay (See page IN–31).**

NG → **Repair or replace or connector.**

OK

Check and replace ECM (See page IN–31).

OBD II scan tool (excluding TOYOTA hand–held tester)

1	**Check voltage between terminal STA of ECM connector and body ground.**

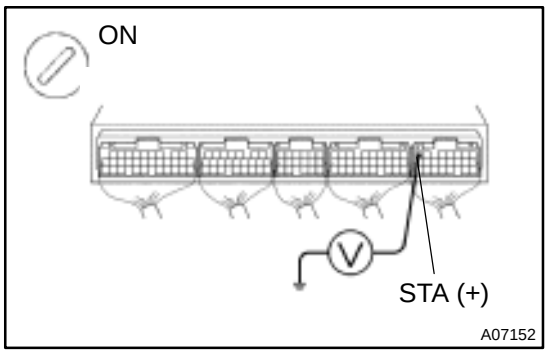

PREPARATION:
Remove the glove compartment (See page SF–73).
CHECK:
Measure voltage between terminal STA of the ECM connector and body ground during engine cranking.
OK:
Voltage: 6 V or more

OK → **Proceed to next circuit inspection shown on problem symptom table (See page DI–221).**

NG

2	**Check for open in harness and connector between ECM and starter relay (See page IN–31).**

NG → **Repair or replace harness or connector.**

OK

Check and replace ECM (See page IN–31).

AUTOMATIC TRANSAXLE (A140E)

DI02U–02

HOW TO PROCEED WITH TROUBLESHOOTING

Items inside ▱ are titles of pages in this manual, with the page number indicated in the bottom portion. See the indicated pages for detailed explanations.

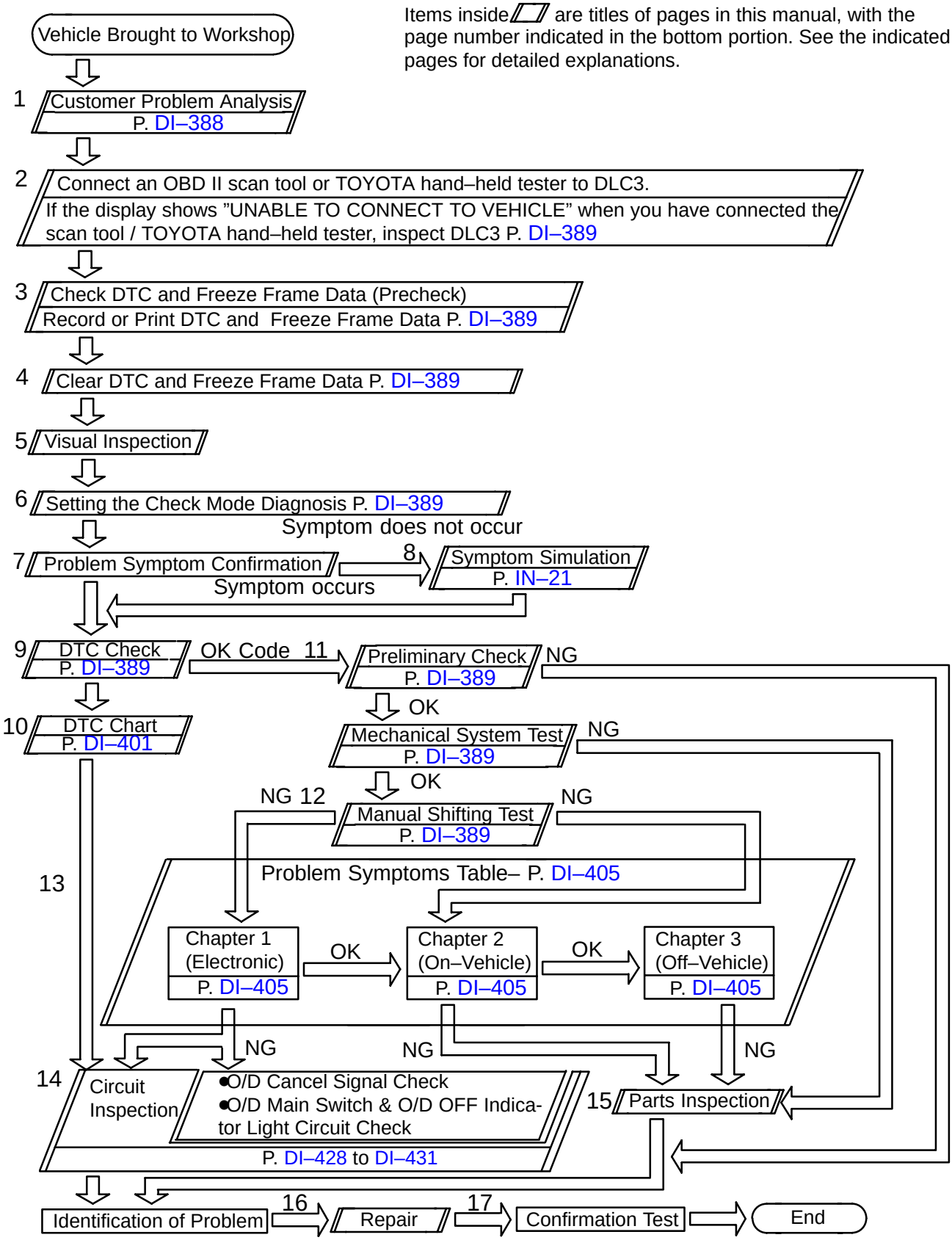

DI02V–02

CUSTOMER PROBLEM ANALYSIS CHECK

Transaxle Control System Check Sheet	Inspector's Name :

Customer's Name		Registration No.	
		Registration Year	/ /
		Frame No.	
Date Vehicle Brought In	/ /	Odometer Reading	km mile

Date Problem Occurred	/ /
How Often Problem Occurs ?	☐ Continuous ☐ Intermittent (times a day)

Symptoms	☐ Vehicle does not move (☐ Any position ☐ Particular position)
	☐ No up–shift (☐ 1st → 2nd ☐ 2nd → 3rd ☐ 3rd → O/D)
	☐ No down–shift (☐ O/D → 3rd ☐ 3rd → 2nd ☐ 2nd → 1st)
	☐ Lock–up malfunction
	☐ Shift point too high or too low
	☐ Harsh engagement (☐ N → D ☐ Lock–up ☐ Any drive position)
	☐ Slip or shudder
	☐ No kick–down
	☐ Others ( )

Check Item	Malfunction Indicator Lamp	☐ Normal	☐ Remains ON

DTC Check	1st Time	☐ Normal code	☐ Malfunction code (Code)
	2nd Time	☐ Normal code	☐ Malfunction code (Code)

DI02W–02

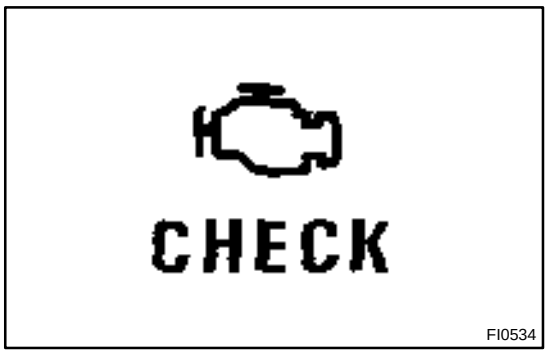

PRE–CHECK

1. DIAGNOSIS SYSTEM

(a) Description

- When troubleshooting OBD II vehicles, the only difference from the usual troubleshooting procedure is that you connect an OBD II scan tool complying with SAE J1987 or TOYOTA hand–held tester to the vehicle, and read off various data output from the vehicle's ECM.
  OBD II regulations require that the vehicle's on–board computer lights up the Malfunction Indicator Lamp (MIL) on the instrument panel when the computer detects a malfunction in the computer itself or in drive system components which affect vehicle emissions. In addition to the MIL lighting up when a malfunction is detected, the applicable DTCs prescribed by SAE J2012 are recorded in the ECM memory (See page DI–16).
  If the malfunction only occurs in 3 trips, the MIL goes off but the DTCs remain recorded in the ECM memory.

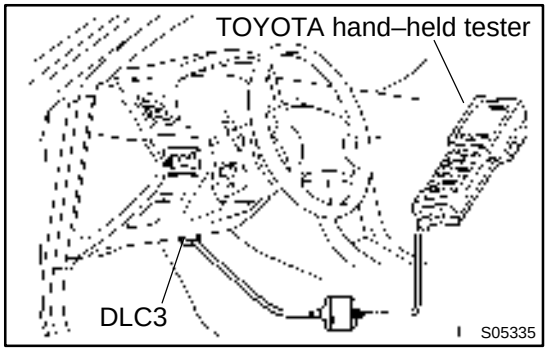

- To check the DTCs, connect an OBD II scan tool or TOYOTA hand–held tester to DLC3 on the vehicle.
  The OBD II scan tool or TOYOTA hand–held tester also enables you to erase the DTCs and check freeze frame data and various forms of engine data (For instruction book).
  DTCs include SAE controlled codes and Manufacturer controlled codes.
  SAE controlled codes must be set as the codes prescribed by the SAE, while Manufacturer controlled codes can be set freely by the manufacturer within the prescribed limits.
  (See DTC chart on page DI–401)

- The diagnosis system operates in normal mode during normal vehicle use, and also has a check mode for technicians to simulate malfunction symptoms and perform troubleshooting. Most DTCs use 2 trip detection logic(*) to prevent erroneous detection. By switching the ECM to check mode when troubleshooting, the technician can cause the MIL to light up and for a malfunction that is only detected once or momentarily.
  (TOYOTA hand–held tester) (See page DI–401)
- *2 trip detection logic:
  When a logic malfunction is first detected, the malfunction is temporarily stored in the ECM memory. If the same malfunction is detected again during the 2nd test drive, this 2nd detection causes the MIL to light up.

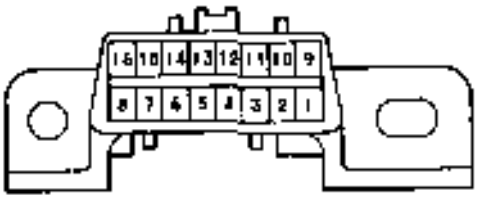

DLC3

N09214

(b) Inspect the DLC3.
The vehicle's ECM uses V.P.W. (Variable Pulse Width) for communication to comply with SAE J1850. The terminal arrangement of DLC3 complies with SAE J1962 and matches the V.P.W. format.

Tester connection	Condition	Specified condition
2 (Bus ~ Line) – 5 (Signal ground)	During communication	Pulse generation
4 (Chassis Ground) – Body	Always	1 Ω or less
5 (Signal Ground) – Body	Always	1 Ω or less
16 (B+) – Body	Always	9 – 14 V

HINT:
If your display shows "UNABLE TO CONNECT TO VEHICLE" when you have connected the cable of OBD II scan tool or TOYOTA hand–held tester to DLC3, turned the ignition switch ON and operated the scan tool, there is a problem on the vehicle side or tool side.

- If communication is normal when the tool is connected to another vehicle, inspect DLC3 on the original vehicle.
- If communication is still not possible when the tool is connected to another vehicle, the problem is probably in the tool itself, so consult the Service Department listed in the tool's instruction manual.

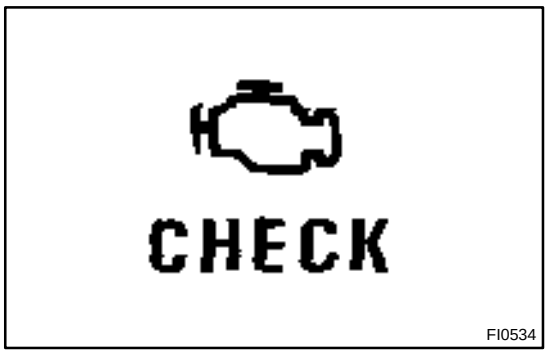

2. INSPECT DIAGNOSIS (NORMAL MODE)

(a) Check the MIL.

(1) The MIL comes on when the ignition switch is turned ON and the engine is not running.

HINT:

If the MIL does not light up, troubleshoot the combination meter (See page BE–47).

(2) When the engine is started, the MIL should go off. If the lamp remains on, the diagnosis system has detected a malfunction or abnormality in the system.

(b) Check the DTC.

NOTICE:

(TOYOTA hand–held tester only): When the diagnostic system is switched from normal mode to check mode, it erases all DTCs and freeze frame data recorded in normal mode. So before switching modes, always check the DTCs and freeze frame data, and note them down.

(1) Prepare an OBD II scan tool (complying with SAE J1978) or TOYOTA hand–held tester.

(2) Connect the OBD II scan tool or TOYOTA hand–held tester to DLC3 at the lower portion of the instrument panel.

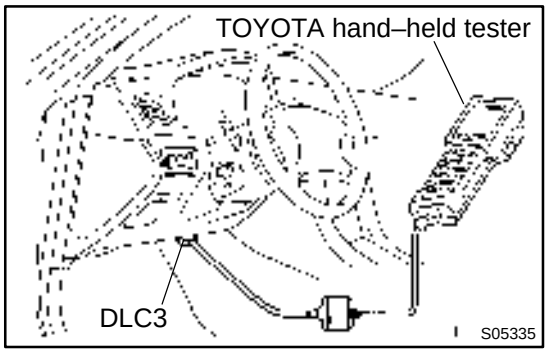

(3) Turn the ignition switch ON and turn the OBD II scan tool or TOYOTA hand–held tester switch ON.

(4) Use the OBD II scan tool or TOYOTA hand–held tester to check the DTCs and freeze frame data and note them down (For operating instructions, see the OBD II scan tool's instruction book).

(5) See page DI–401 to confirm the details of the DTCs.

NOTICE:

When simulating symptoms with an OBD II scan tool (excluding TOYOTA hand–held tester) to check the DTCs, use normal mode. For codes on the DTCs chart subject to "2 trip detection logic", turn the ignition switch off after the symptoms have been simulated the 1st time. Then repeat the simulation process again. When the program has DTCs, the DTCs are recorded in the ECM.

3. INSPECT DIAGNOSIS (CHECK MODE)

HINT:

TOYOTA hand–held tester only: Compared to the Normal mode, the Check mode has high sensing ability to detect malfunctions. Furthermore, the same diagnostic items which are detected in Normal mode can also be detected in Check mode.

(a) Check the DTC.

(1) Check the initial conditions.

- Battery positive voltage 11 V or more
- Throttle valve fully closed
- Transaxle in P position
- Air conditioning switched off

(2) Turn the ignition switch OFF.

(3) Prepare a TOYOTA hand–held tester.

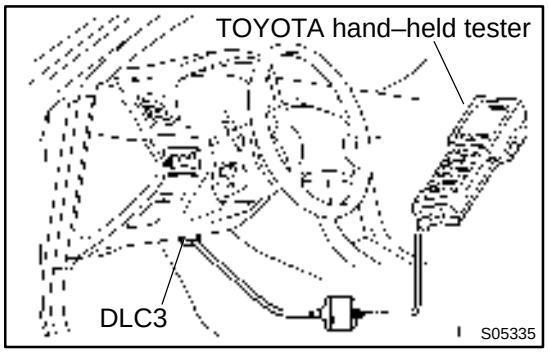

(4) Connect the TOYOTA hand–held tester to DLC3 at the lower side of the instrument panel.

(5) Turn the ignition switch ON and switch the TOYOTA hand–held tester ON.

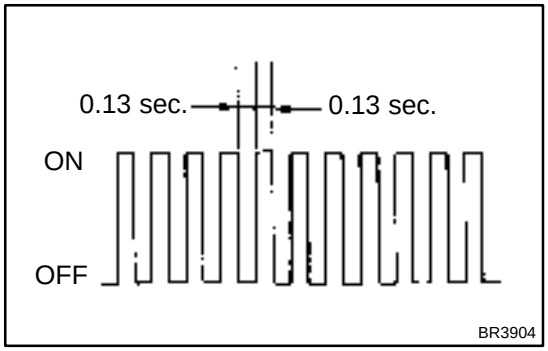

(6) Switch the TOYOTA hand–held tester from Normal mode to Check mode (Check that the MIL flashes).

(7) Start the engine (MIL goes out after the engine starts).

(8) Simulate the conditions of the malfunction described by the customer.

NOTICE:

Leave the ignition switch ON until you have checked the DTCs, etc.

(9) After simulating the malfunction conditions, use the TOYOTA hand–held tester diagnosis selector to check the DTCs and freeze frame data, etc.

HINT:

Take care not to turn the ignition switch OFF, as turning it off the diagnosis system switches from Check mode to Normal mode, so all DTCs, etc. are erased.

(10) After checking the DTC, inspect the applicable circuit.

(b) Clearance the DTC.
The following actions will erase the DTC and freeze frame data. Operating an OBD II scan tool (complying with SAE J1978) or TOYOTA hand–held tester to erase the codes. (See the OBD II scan tool's instruction book for operating instructions.)

4. ROAD TEST

NOTICE:

Perform the test at normal operating ATF temperature 50 – 80 °C (122 – 176 °F).

(a) D position test

Shift into the D position and fully depress the accelerator pedal and and check the following points:

(1) Check up–shift operation.

1 → 2, 2 → 3 and 3 → O/D up–shifts take place, at the shift point shown in the automatic shift schedule (See page SS–54).

HINT:

- O/D Gear Up–shift Prohibition Control (1. Coolant temp. is 50 °C (122 °C) or less. 2. If there is a 10 km/h (6 mph) difference between the set cruise control speed and vehicle speed.)
- O/D Gear Lock–up Prohibition Control (1. Brake pedal is depressed. 2. Coolant temp. is 50 °C (122 °C) or less.)

(2) Check for shift shock and slip.

Check for shock and slip at the 1 → 2, 2 → 3 and 3 → O/D up–shifts.

(3) Check for abnormal noises and vibration.

Run at the D position lock–up or O/D gear and check for abnormal noises and vibration.

HINT:

The check for the cause of abnormal noises and vibration must be done very thoroughly as it could also be due to loss of balance in the differential or torque converter clutch, etc.

(4) Check kick–down operation.

While running in the D position, 2nd, 3rd and O/D gears, check to see that the possible kick–down vehicle speed limits for 2 → 1, 3 → 2 and O/D → 3 kick–downs conform to those indicated on the automatic shift schedule (See page SS–54).

(5) Check abnormal shock and slip at kick–down.

(6) Check the lock–up mechanism.

- Drive in D position, O/D gear, at a steady speed (lock–up ON) of about 75 km/h (47 mph).
- Lightly depress the accelerator pedal and check that the engine speed does not change abruptly.

If there is a big jump in engine speed, there is no lock–up.

(b) 2 position test

Shift into the 2 position and fully depress the accelerator pedal and check the following points:

(1) Check up–shift operation.

Check to see that the 1 → 2 up–shift takes place and that the shift point conforms to the automatic shift schedule (See page SS–54).

HINT:

There is no O/D up–shift and lock–up in the 2 position.

(2) Check engine braking.

While running in the 2 position and 2nd gear, release the accelerator pedal and check the engine braking effect.

(3) Check for abnormal noises during acceleration and deceleration, and for shock at up–shift and down–shift.

(c) L position test

Shift into the 2 position and fully depress the accelerator pedal and check the following points:

(1) Check no up–shift.
While running in the L position, check that there is no up–shift to 2nd gear.

(2) Check engine braking.
While running in the L position, release the accelerator pedal and check the engine braking effect.

(3) Check for abnormal noises during acceleration and deceleration.

(d) R position test

Shift into the R position and fully depress the accelerator pedal and check for slipping.

CAUTION:

Before conducting this test ensure that the test area is free from people and obstruction.

(e) P position test

Stop the vehicle on a grade (more than 5˚) and after shifting into the P position, release the parking brake. Then, check to see that the parking lock pawl holds the vehicle in place.

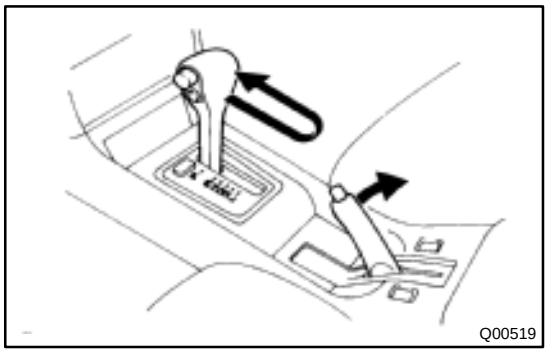

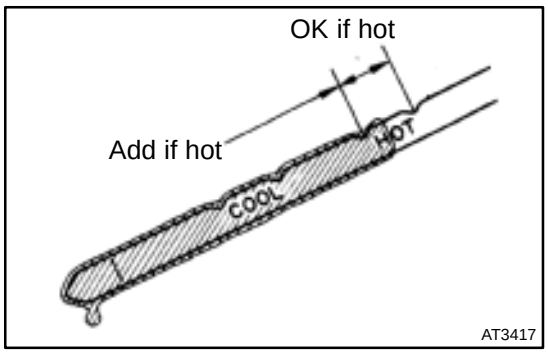

5. BASIC INSPECTION

(a) Check the fluid level.

HINT:

- Drive the vehicle so that the engine and transaxle are at normal operating temperature.
  Fluid temp.: 70 – 80 ˚C (158 – 176 ˚F)
- Only use the COOL range on the dipstick as a rough reference when the fluid is replaced or the engine does not run.

(1) Park the vehicle on a level surface and set the parking brake.

(2) With the engine idling and the brake pedal depressed, shift the shift lever into all positions from P to L position and return to P position.

(3) Pull out the dipstick and wipe it clean.

(4) Push it back fully into the pipe.

(5) Pull it out and check that the fluid level is in the HOT range.

If the level is not within the range, add new fluid.

Fluid type: ATF D–II or DEXRON®III (DEXRON®II)

NOTICE:

Do not overfill.

(b) Check the fluid condition.

If the level is not within the hot range.

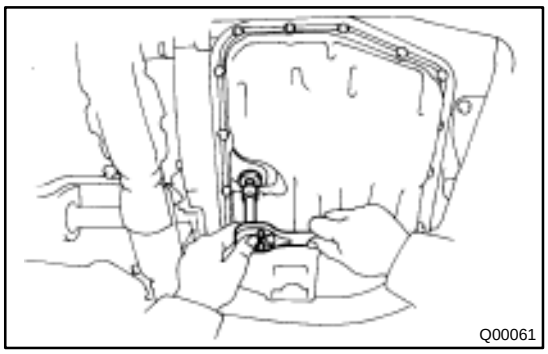
Q00061

(c) Replace the ATF.
(1) Remove the drain plug and drain the fluid.
(2) Reinstall the drain plug securely.

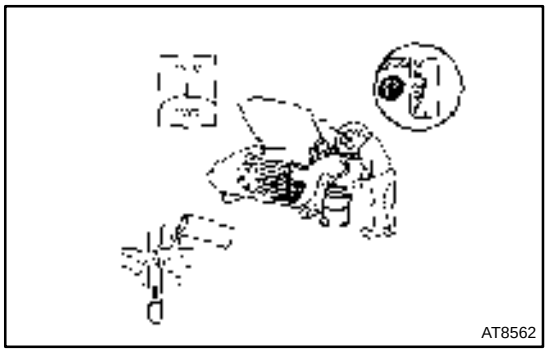
AT8562

(3) With the engine OFF add new fluid through the oil filler pipe.

Fluid type: ATF D–II or DEXRON®III (DEXRON®II)
Capacity: 2.5 liters (2.6 US qts, 2.1 Imp. qts)

(4) Start the engine and shift the shift lever into all positions from P to L position and then shift into P position.

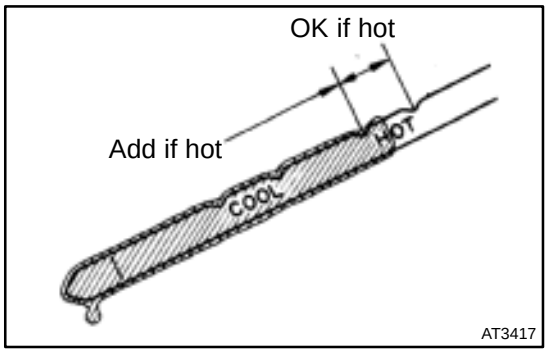

AT3417

(5) With the engine idling, check the fluid level. Add fluid up to the COOL level on the dipstick.
(6) Check the fluid level is at the normal operating temperature, 70 – 80 °C (158 – 176 °F), and add as necessary.

NOTICE:
Do not overfill.

(d) Check the fluid leaks.
Check for leaks in the transaxle.

If there are leaks, it is necessary to repair or replace O–rings, gasket, oil seals, plugs or other parts.

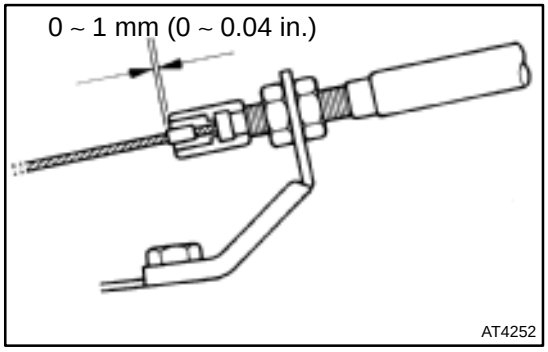

AT4252

(e) Inspect and adjust the throttle cable.
(1) Check that the accelerator pedal is fully released.
(2) Check that the inner cable is not slack.
(3) Measure the distance between the outer cable end and stopper on the cable.

Standard distance: 0 – 1 mm (0 – 0.04 in.)

If the distance is not standard, adjust the cable by the adjusting nuts.

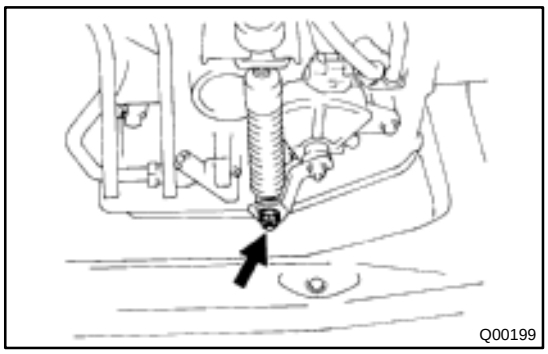
Q00199

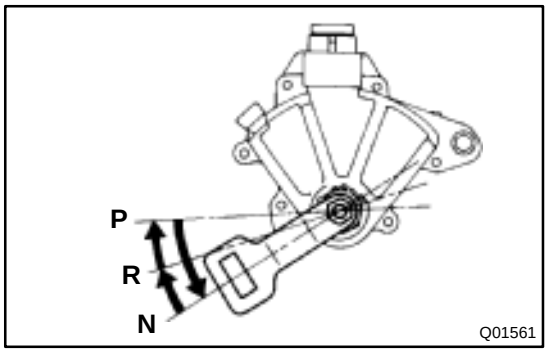

Q01561

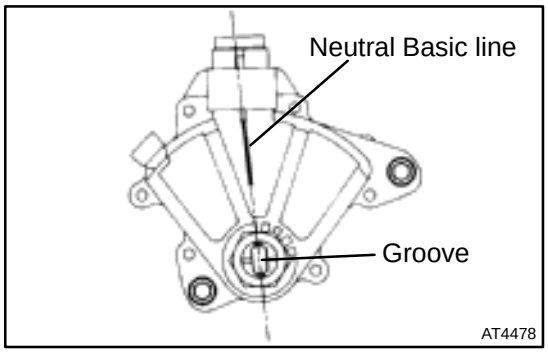

AT4478

(f) Inspect and adjust the shift lever position.
When shifting the shift lever from the N position to other positions, check that the lever can be shifted smoothly and accurately to each position and that the position indicator is aligned with the correct position.

If the indicator is not aligned with the correct position, carry out the following adjustment procedures.

(1) Loosen the nut on the shift lever.
(2) Push the control shaft fully rearward.
(3) Return the control shaft lever 2 notches to N position.
(4) Set the shift lever to N position.
(5) While holding the shift lever lightly toward the R position side, tighten the shift lever nut.

Torque: 13 N·m (130 kgf·cm, 9 ft·lbf)

(6) Start the engine and make sure that the vehicle moves forward when shifting the lever from the N to D position and reverses when shifting it to the R position.

(g) Inspect and adjust the park/neutral position.
Check that the engine can be started with the shift lever only in the N or P position, but not in other positions.

If it is not as stated above, carry out the following adjustment procedures.

(1) Loosen the park/neutral position switch bolt and set the shift lever to the N position.
(2) Align the groove and neutral basic line.
(3) Hold the switch in position and tighten the bolt.

Torque: 5.4 N·m (55 kgf·cm, 48 in·lbf)

For continuity inspection of the park/neutral position switch, see page DI–424.

(h) Check the idle speed.
Idle speed : 750 ± 50 rpm
(In N position and air conditioner OFF)

6. MECHANICAL SYSTEM TESTS

(a) Measure the stall speed.

The object of this test is to check the overall performance of the transaxle and engine by measuring the stall speeds in the D and R positions.

NOTICE:

- **Do the test at normal operating fluid temperature 50 – 80 ˚C (122 – 176 ˚F).**
- **Do not continuously run this test for longer than 5 seconds.**
- **To ensure safety, conduct this test in a wide, clear level area which provides good traction.**
- **The stall test should always be carried out in pairs. One technician should observe the conditions of wheels or wheel stoppers outside the vehicle while the other is doing the test.**

(1) Chock the 4 wheels.

(2) Connect an OBD II scan tool or TOYOTA hand–held tester to DLC3.

(3) Fully apply the parking brake.

(4) Keep your left foot depressing firmly on the brake pedal.

(5) Start the engine.

(6) Shift into the D position. Press all the way down on the accelerator pedal with your right foot. Quickly read the stall speed at this time.

Stall speed: 2,450 ± 150 rpm

(7) Do the same test in R position.

Stall speed: 2,450 ± 150 rpm

Evaluation:

Problem	Possible cause
(a) Stall speed low in D and R positions	●Engine output may be insufficient ●Stator one–way clutch is operating properly ●HINT: If more than 600 rpm below the specified value, the torque converter clutch could be faulty.
(b) Stall speed high in D position	●Line pressure too low ●Forward clutch slipping ●No.2 one–way clutch not operating properly ●O/D clutch slipping
(c) Stall speed high in R position	●Line pressure too low ●Direct clutch slipping ●1st & reverse brake slipping ●O/D clutch slipping
(d) Stall speed high in D and R positions	●Line pressure too low ●Improper fluid level ●O/D one–way clutch not operating properly

(b) Measure the time lag.
When the shift lever is shifted while the engine is idling, there will be a certain time lapse or lag before the shock can be felt. This is used for checking the condition of the O/D direct clutch, forward clutch, and 1st & reverse brake.

NOTICE:

- **Do the test at normal operating fluid temperature 50 – 80 ˚C (122 – 176 ˚F).**
- **Be sure to allow 1 minute interval between tests.**
- **Take 3 measurements and take the average value.**

(1) Connect an OBD II scan tool or TOYOTA hand–held tester to DLC3.
(2) Fully apply the parking brake.
(3) Start the engine and check idle speed.
Idle speed : 750 ± 50 rpm (In N position and air conditioner OFF)
(4) Shift the shift lever from N to D position. Using a stop watch, measure the time from when the lever is shifted until the shock is felt.
Time lag: N → D Less than 1.2 seconds
(5) In the same manner, measure the time lag for N → R.
Time lag: N → R Less than 1.5 seconds
Evaluation (If N → D time or N → R time lag is longer than the specified):

Problem	Possible cause
N → D time lag is longer	●Line pressure too low ●Forward clutch worn ●O/D one–way clutch not operating
N → R time lag is longer	●Line pressure too low ●Direct clutch worn ●1st & reverse brake worn ●O/D one–way clutch not operating properly

7. HYDRAULIC TEST

Measure the line pressure.

NOTICE:

- **Do the test at normal operation fluid temperature 50 – 80 ˚C (122 – 176 ˚F).**
- **The line pressure test should always be carried out in pairs. One technician should observe the conditions of wheels or wheel stoppers outside the vehicle while the other is doing the test.**
- **Be careful to prevent SST's hose from interfering with the exhaust pipe.**

(1) Warm up the ATF.
(2) Remove the test plug on the transaxle case front left side and connect SST.
(See page AX–17 for the location to connect SST)
SST 09992–00095 (09992–00231, 09992–00271)
(3) Fully apply the parking brake and chock the 4 wheels.
(4) Connect an OBD II scan tool or TOYOTA hand–held tester to DLC3.
(5) Start the engine and check idling speed.
(6) Keep your left foot pressing firmly on the brake pedal and shift into D position.
(7) Measure the line pressure when the engine is idling.
(8) Depress the accelerator pedal all the way down. Quickly read the highest line pressure when engine speed reaches stall speed.
(9) In the same manner, do the test in R position.

Specified line pressure:

Condition	D position kPa (kgf/cm^2, psi)	R position kPa (kgf/cm^2, psi)
Idling	362 – 422 (3.7 – 4.3, 53 – 61)	618 – 794 (6.3 – 8.1, 90 – 115)
Stall	735 – 862 (7.5 – 8.8, 107 – 125)	1,373 – 1,608 (14.0 – 16.4, 199 – 233)

If the measured pressure is not up to the specified value, recheck the throttle cable adjustment and retest.

Evaluation

Problem	Possible cause
If the measured values at all positions are higher	●Throttle cable out of adjustment ●Throttle valve defective ●Regulator valve defective
If the measured values at all positions are lower	●Throttle cable out of adjustment ●Throttle valve defective ●Regulator valve defective ●Oil pump defective ●O/D direct clutch defective
If pressure is low in the D position only	●D position circuit fluid leakage ●Forward clutch defective
If pressure is low in the R position only	●R position circuit fluid leakage ●Direct clutch defective ●1st & reverse brake defective

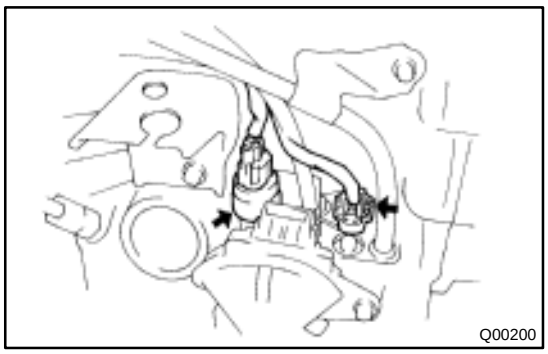

8. MANUAL SHIFTING TEST

HINT:

By this test, it can be determined whether the trouble is within the electrical circuit or is a mechanical problem in the transaxle.

(a) Disconnect the solenoid wire.

(b) Inspect the manual driving operation.

Check that the shift and gear positions correspond to the table below.

While driving, shift through the L, 2 and D positions. Check that the gear change corresponds to the shift position.

Shift Position	Gear Position
D	O/D
2	3rd
L	1st
R	Reverse
P	Pawl Lock

HINT:

If the L, 2 and D gear positions are difficult to distinguish, do the above test.

If any abnormality is found in the above test, the problem is in the transaxle itself.

(c) Connect the solenoid wire.

(d) Clear out the DTC (See page DI–389).

DI02X–02

DIAGNOSTIC TROUBLE CODE CHART

If a DTC is displayed during the DTC check, check the circuit listed for that code in the table below and proceed to the page given.

* : ● ...MIL light up

DTC No. (See Page)	Detection Item	Trouble Area	MIL *	Memory
P0500 (DI–408)	Vehicle Speed Sensor Malfunction (No.1 Vehicle Speed Sensor)	□Open or short in No.1 vehicle speed sensor circuit □No.1 vehicle speed sensor □Combination meter □ECM □Automatic transaxle (clutch, brake or gear etc.)	●	○
P0750 (DI–411)	Shift Solenoid A Malfunction (Shift Solenoid Valve No.1)	□Shift solenoid valve No.1 is stuck open or closed □Valve body is blocked up or stuck □Automatic transaxle (clutch, brake or gear etc.)	●	○
P0753 (DI–413)	Shift Solenoid A Electrical Malfunction (Shift Solenoid Valve No.1)	□Open or short in shift solenoid valve No.1 circuit □Shift solenoid valve No.1 □ECM	●	○
P0755 (DI–411)	Shift Solenoid B Malfunction (Shift Solenoid Valve No.2)	□Shift solenoid valve No.2 is stuck open or closed □Valve body is blocked up or stuck □Automatic transaxle (clutch, brake or gear etc.)	●	○
P0758 (DI–413)	Shift Solenoid B Electrical Malfunction (Shift Solenoid Valve No.2)	□Open or short in shift solenoid valve No.2 circuit □Shift solenoid valve No.2 □ECM	●	○
P0770 (DI–417)	Shift Solenoid E Malfunction (Shift Solenoid Valve SL)	□Shift solenoid valve SL is stuck open or closed □Valve body is blocked up or stuck □Lock–up clutch □Automatic transaxle (clutch, brake or gear etc.)	●	○
P0773 (DI–419)	Shift Solenoid E Electrical Malfunction (Shift Solenoid Valve SL)	□Open or short in shift solenoid valve SL circuit □Shift solenoid valve SL □ECM	●	○
P1520 (DI–170)	Stop Light Switch Signal Malfunction	□Open or short in stop light switch circuit □Stop light switch □ECM	●	○
P1780 (DI–424)	Park/Neutral Position Switch Malfunction	□Short in park/neutral position switch circuit □Park/neutral position switch □ECM	●	○

DI02Y–02

PARTS LOCATION

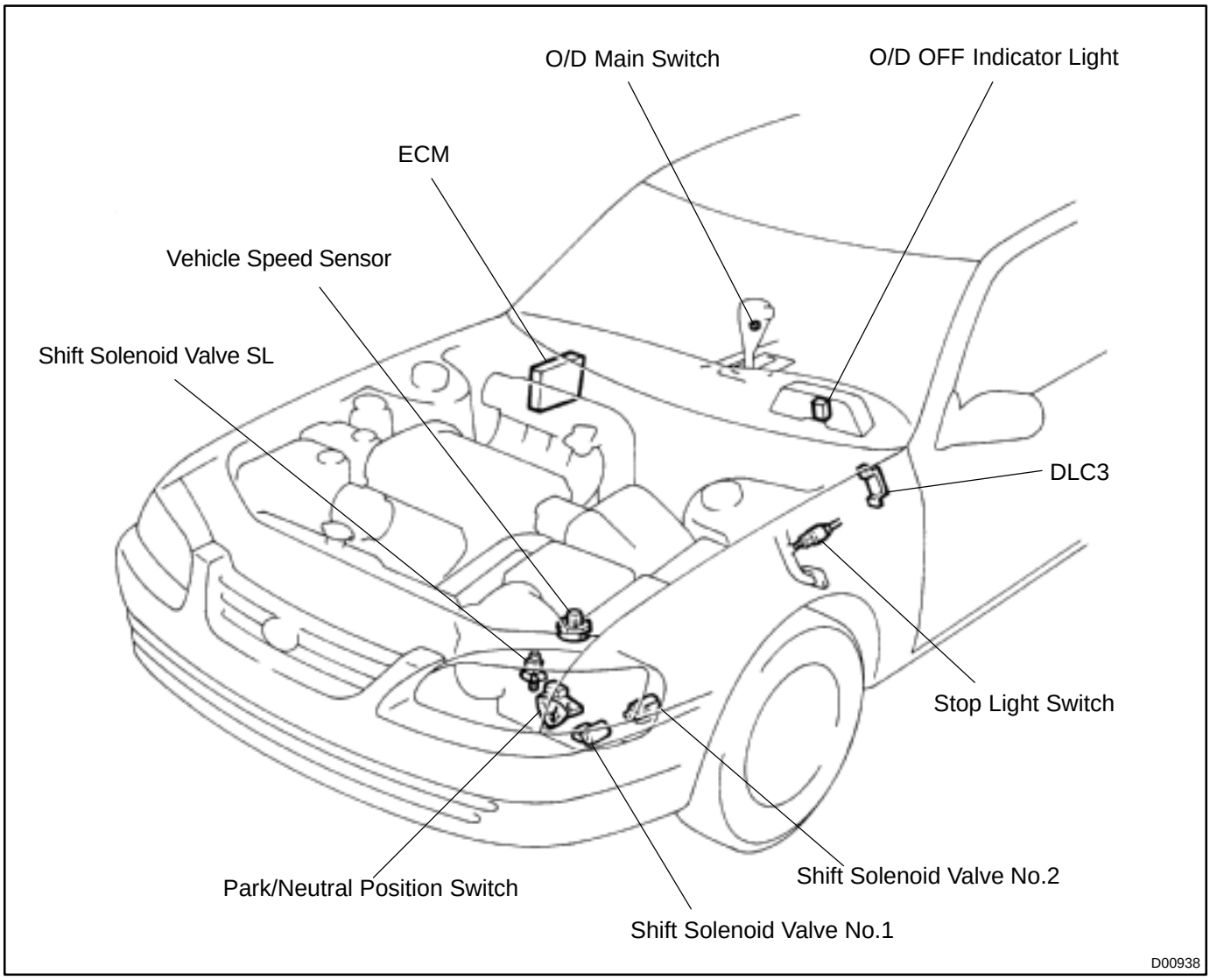

DI1IZ–01

TERMINALS OF ECM

w/ Engine Immobiliser System

ECM Terminals

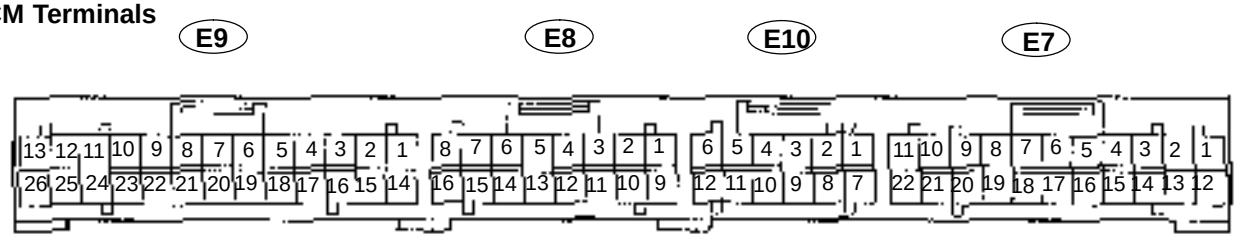

FI6526

Symbols (Terminals No.)	Wiring Color	Condition	STD Voltage (V)
S1 ↔ E1 (E9–8 ↔ E9–24)	V ↔ BR	IG ON	9 ~ 14
		1st or 2nd gear	9 ~ 14
		3rd or O/D gear	Below 1
S2 ↔ E1 (E9–21 ↔ E9–24)	L–B ↔ BR	IG ON	Below 1
		1st or 2nd gear	9 ~ 14
		3rd or O/D gear	Below 1
SL ↔ E1 (E9–20 ↔ E9–24)	P ↔ BR	IG ON	Below 1
		Vehicle driving under lock–up position	9 ~ 14
OD1 ↔ E1 (E7–18 ↔ E9–24)	Y–B ↔ BR	IG ON	9 ~ 14
OD2 ↔ E1 (E7–5 ↔ E9–24)	G–O ↔ BR	O/D main switch ON	9 ~ 14
		O/D main switch OFF	Below 1
L ↔ E1 (E7–15 ↔ E9–24)	Y ↔ BR	IG ON and Shift lever L position	9 ~ 14
		IG ON and Shift lever other than L position	Below 1
2 ↔ E1 (E7–16 ↔ E9–24)	*1L–W ↔ BR *2O ↔ BR	IG ON and Shift lever 2 position	9 ~ 14
		IG ON and Shift lever other than 2 position	Below 1
R ↔ E1 (E7–17 – E9–24)	R–B ↔ BR	IG ON and Shift lever R position	9 ~ 14
		IG ON and Shift lever other than R position	Below 1
NSW ↔ E1 (E7–22 ↔ E9–24)	B–W ↔ BR	IG ON and Shift lever P or N position	9 ~ 14
		IG ON and Shift lever other than P or N position	Below 1

*1: TMC made

*2: TMMK made

w/o Engine Immobiliser System

ECM Terminals

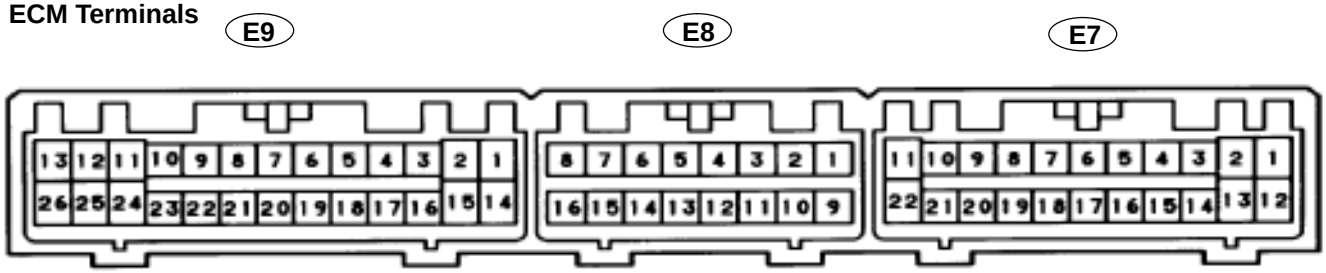

Symbols (Terminals No.)	Wiring Color	Condition	STD Voltage (V)
S1 ↔ E1 (E9–7 ↔ E9–14)	V ↔ BR	IG ON	9 ~ 14
		1st or 2nd gear	9 ~ 14
		3rd or O/D gear	Below 1
S2 ↔ E1 (E9–6 ↔ E9–14)	L–B ↔ BR	IG ON	Below 1
		1st or 2nd gear	9 ~ 14
		3rd or O/D gear	Below 1
SL ↔ E1 (E9–1 ↔ E9–14)	P ↔ BR	IG ON	Below 1
		Vehicle driving under lock–up position	9 ~ 14
OD1 ↔ E1 (E7–20 ↔ E9–14)	Y–B ↔ BR	IG ON	9 ~ 14
OD2 ↔ E1 (E7–7 ↔ E9–14)	G–O ↔ BR	O/D main switch ON	9 ~ 14
		O/D main switch OFF	Below 1
L ↔ E1 (E7–19 ↔ E9–14)	Y ↔ BR	IG ON and Shift lever L position	9 ~ 14
		IG ON and Shift lever other than L position	Below 1
2 ↔ E1 (E7–18 ↔ E9–14)	*1L–W ↔ BR *2O ↔ BR	IG ON and Shift lever 2 position	9 ~ 14
		IG ON and Shift lever other than 2 position	Below 1
R ↔ E1 (E7–17 – E9–14)	R–B ↔ BR	IG ON and Shift lever R position	9 ~ 14
		IG ON and Shift lever other than R position	Below 1
NSW ↔ E1 (E7–22 ↔ E9–14)	B–W ↔ BR	IG ON and Shift lever P or N position	9 ~ 14
		IG ON and Shift lever other than P or N position	Below 1

*1: TMC made

*2: TMMK made

DI030–02

PROBLEM SYMPTOMS TABLE

If a normal code is displayed during the DTC check but the trouble still occurs, check the circuits for each symptom in the order given in the charts on the following pages and proceed to the page given for trouble-shooting.

The Matrix Chart is divided into 3 chapters.

Chapter 1: Electronic Circuit Matrix Chart

Chapter 2: On–vehicle Repair Matrix Chart

Chapter 3: Off–vehicle repair Matrix Chart

- ☐ If the instruction ”Proceed to next circuit inspection shown on matrix chart” is given in the flow chart for each circuit, proceed to the circuit with the next highest number in the table to continue the check.
- ☐ If the trouble still occurs even though there are no abnormalities in any of the other circuits, then check and replace the ECM.

1. Chapter 1: Electronic Circuit Matrix Chart

Symptom	Suspect Area	See page
No up–shift (A particular gear, from 1st to 3rd gear, is not up–shifted)	1. ECM	IN–31
No up–shift (3rd → O/D)	1. O/D main switch & O/D OFF indicator light circuit 2. O/D cancel signal circuit 3. ECM	DI–431 DI–428 IN–31
No down–shift (O/D → 3rd)	1. ECM	IN–31
No down–shift (A particular gear, from 3rd to 1st gear, is not down–shifted)	1. ECM	IN–31
No lock–up or No lock–up off	1. Stop light switch circuit 2. ECM	DI–423 IN–31
Shift point too high or too low	1. ECM	IN–31
Up–shift to O/D from 3rd while O/D main switch is OFF	1. O/D main switch & O/D OFF indicator light circuit 2. ECM	DI–431 IN–31
Up–shift to O/D from 3rd while engine is cold	1. ECM	IN–31
Poor acceleration	1. ECM	IN–31
No kick–down	1. ECM	IN–31
Engine stalls when starting off or stopping	1. ECM	IN–31

2. Chapter 2: On–Vehicle Repair (● : A140E AUTOMATIC TRANSAXLE Repair Manual Pub. No. RM385U)

Symptom	Suspect Area	See page
Vehicle does not move in any forward positions and reverse position	1. Manual valve 2. Throttle valve 3. Primary regulator valve 4. Off–vehicle repair matrix chart	● ● ● –
Vehicle does not move in R position	1. Off–vehicle repair matrix chart	–
No up–shift (1st → 2nd)	1. 1–2 shift valve 2. Off–vehicle repair matrix chart	● –
No up–shift (2nd → 3rd)	1. 2–3 shift valve 2. Off–vehicle repair matrix chart	● –
No up–shift (3rd → O/D)	1. 3–4 shift valve 2. Off–vehicle repair matrix chart	● –
No down–shift (O/D → 3rd)	1. 3–4 shift valve	●
No down–shift (3rd → 2nd)	1. 2–3 shift valve	●
No down–shift (2nd → 1st)	1. 1–2 shift valve	●
No lock–up or No lock–up off	1. Lock–up relay valve 2. Off–vehicle repair matrix chart	● –
Harsh engagement (N → D)	1. C_1 accumulator 2. Off–vehicle repair matrix chart	● –
Harsh engagement (N → R)	1. C_2 accumulator 2. Off–vehicle repair matrix chart	● –
Harsh engagement (N → L)	1. Low coast modulator valve	●
Harsh engagement (Lock–up)	1. Lock–up relay valve 2. Off–vehicle repair matrix chart	● –
Harsh engagement (1st → 2nd → 3rd → O/D)	1. Throttle modulator valve 2. Cut back valve 3. Throttle valve	● ● ●
Harsh engagement (2nd → 3rd)	1. C_2 accumulator	●
Harsh engagement (3rd → O/D)	1. B_0 accumulator	●
Harsh engagement (O/D → 3rd)	1. C_0 accumulator 2. B_0 accumulator	● ●
Slip or shudder (Forward and reverse)	1. Throttle valve 2. Oil strainer 3. Off–vehicle repair matrix chart	● ● –
No engine braking (1st: L position)	1. Low coast modulator valve 2. Off–vehicle repair matrix chart	● –
No engine braking (2nd: 2 position)	1. 2nd coast modulator valve 2. Off–vehicle repair matrix chart	● –
No kick–down	1. 1–2 shift valve 2. 2–3 shift valve 3. 3–4 shift valve	● ● ●

3. Chapter 3: Off–Vehicle Repair (● : A140E AUTOMATIC TRANSAXLE Repair Manual Pub. No. RM385U)

Symptom	Suspect Area	See page
Vehicle does not move in any forward positions and reverse position	1. Front and rear planetary gear 2. O/D planetary gear 3. O/D one–way clutch (F_0) 4. O/D direct clutch (C_0) 5. O/D brake (B_0) 6. Forward clutch (C_1)	● ● ● ● ● ●
Vehicle does not move in R position	1. Front and rear planetary gear unit 2. Direct clutch (C_2) 3. O/D direct clutch (C_0) 4. 1st & reverse brake (B_3)	● ● ● ●
No up–shift (1st → 2nd)	1. No. 1 one–way clutch (F_1) 2. 2nd brake (B_2)	● ●
No up–shift (2nd → 3rd)	1. Direct clutch (C_2)	●
No up–shift (3rd → O/D)	1. O/D brake (B_0)	●
No lock–up or No lock–up off	1. Torque converter clutch	AX–26
Harsh engagement (N → D)	1. Forward clutch (C_1) 2. O/D one–way clutch (F_0) 3. No. 2 one–way clutch (F_2)	● ● ●
Harsh engagement (N → R)	1. Direct clutch (C_2) 2. 1st & reverse brake (B_3)	● ●
Harsh engagement (Lock–up)	1. Torque converter clutch	AX–26
Slip or shudder (Forward position: After warm–up)	1. Torque converter clutch 2. O/D direct clutch (C_0) 3. Forward clutch (C_1) 4. O/D one–way clutch (F_0)	AX–26 ● ● ●
Slip or shudder (R position)	1. Direct clutch (C_2) 2. 1st & reverse brake (B_3) 3. O/D direct clutch (C_0)	● ● ●
Slip or shudder (1st)	1. No. 2 one–way clutch (F_2)	●
Slip or shudder (2nd)	1. No. 1 one–way clutch (F_1) 2. 2nd brake (B_2)	● ●
Slip or shudder (3rd)	1. Direct clutch (C_2)	●
Slip or shudder (O/D)	1. O/D brake (B_0)	●
No engine braking (1st ~ 3rd: D position)	1. 2nd brake (B_2)	●
No engine braking (1st: L position)	1. 1st & reverse brake (B_3)	●
No engine braking (2nd: 2 position)	1. 2nd coast brake (B_1)	●
Poor acceleration (All positions)	1. Torque converter clutch 2. O/D planetary gear	AX–26 ●
Poor acceleration (O/D)	1. O/D direct clutch (C_0) 2. O/D planetary gear	● ●
Large shift shock or engine stalls when starting off or stopping	1. Torque converter clutch	AX–26

DI1J0–01

CIRCUIT INSPECTION

DTC	P0500	Vehicle Speed Sensor Malfunction

CIRCUIT DESCRIPTION

The vehicle speed sensor outputs a 4–pulse signal for every revolution of the rotor shaft, which is rotated by the transmission output shaft via the driven gear. After this signal is converted into a more precise rectangular wave form by the wave form shaping circuit inside the combination meter, it is then transmitted to the ECM. The ECM determines the vehicle speed based on the frequency of these pluse signals.

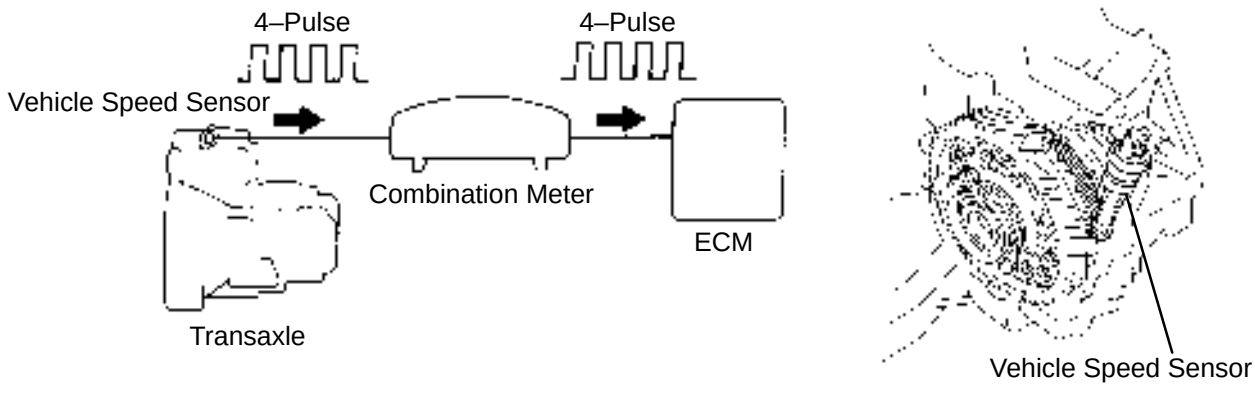

DTC No.	DTC Detecting Condition	Trouble Area
P0500	During vehicle is being driven, no vehicle speed sensor signal to ECM (2 trip detection logic)	●Combination meter ●Open or short in vehicle speed sensor circuit ●Vehicle speed sensor ●ECM ●Automatic transaxle (clutch, brake or gear etc.)
	Clutch or brake slips or gear is broken	

WIRING DIAGRAM

See page DI–145.

INSPECTION PROCEDURE

1	**Check operation of speedometer.**

CHECK:

Drive the vehicle and check if the operation of the speedmeter in the combination meter is normal.

HINT:

The vehicle speed sensor is operating normally if the speedometer display is normal.

NG → **Check speedometer circuit. See combination meter troubleshooting (See page BE–47).**

OK

2	**Check voltage between terminal SPD of ECM connector and body ground.**

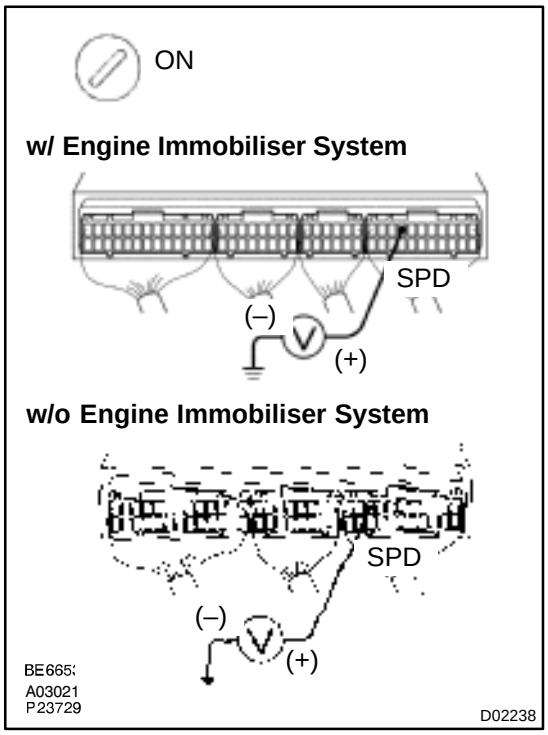

PREPARATION:

(a) Remove glove compartment (See page BO–75).
(b) Shift the shift lever to neutral.
(c) Jack up one of the front wheels.
(d) Turn ignition switch ON.

CHECK:

Measure voltage between terminal SPD of ECM connector and body ground when the wheel is turned slowly.

OK:

Voltage is generated intermittently.

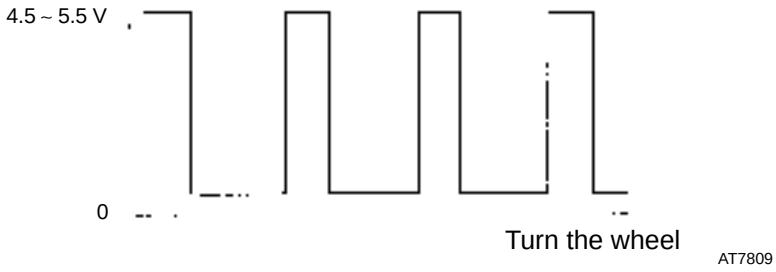

NG → **Check and repair harness and connector between combination meter and ECM (See page IN–31).**

OK

3	Check the ECM (See page IN–31).

NG → Replace the ECM.

OK

Check and repair the transaxle (clutch, brake or gear etc.).

DI032–02

DTC	P0750, P0755	Shift Solenoid A/B Malfunction (Shift Solenoid Valve No.1/No.2)

SYSTEM DESCRIPTION

The ECM uses signals from the vehicle speed sensor and crankshaft position sensor to detect the actual gear position (1st, 2nd, 3rd or O/D gear).
Then the ECM compares the actual gear with the shift schedule in the ECM memory to detect mechanical trouble of the shift solenoid valves, valve body or automatic transaxle (clutch, brake or gear etc.).

DTC No.	DTC Detecting Condition	Trouble Area
P0750 P0755	During normal driving, the gear required by the ECM does not match the actual gear (2 trip detection logic)	●Shift solenoid valve No.1/No.2 is stuck open or closed ●Valve body is blocked up or stuck ●Automatic transaxle (clutch, brake or gear etc.)

Check the shift solenoid valve No.1 when DTC P0750 is output and check the shift solenoid valve No.2 when DTC P0755 is output.

INSPECTION PROCEDURE

1	Check shift solenoid valve No.1 or No.2 operation.

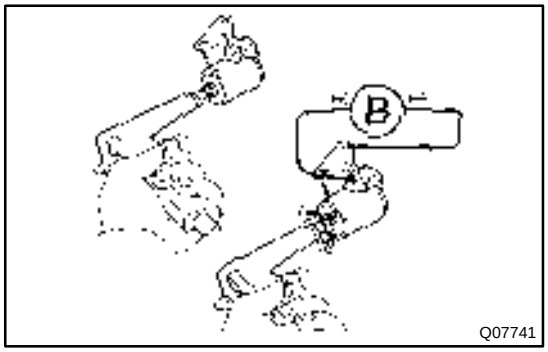

PREPARATION:
(a) Remove the oil pan.
(b) Remove the shift solenoid valve No.1 or No.2.

CHECK:
(a) By applying 490 kPa (5 kgf/cm^2, 71 psi) of compressed air, check that the solenoid valve does not leak air.
(b) When battery positive voltage is supplied to the shift solenoid valve, check that the valve opens.

OK:
(a) Solenoid valve does not leak air.
(b) Solenoid valve opens.

NG → **Replace the shift solenoid valve No.1 or No.2.**

OK

2	Check the valve body (See page DI–405).

NG → Repair or replace the valve body.

OK

Repair or replace the transaxle.

DTC	P0753, P0758	Shift Solenoid A/B Electrical Malfunction (Shift Solenoid Valve No.1/No.2)

CIRCUIT DESCRIPTION

Shifting from 1st to O/D is performed in combination with ON and OFF of the shift solenoid valves No.1 and No.2 controlled by ECM. If an open or short circuit occurs in either of the shift solenoid valves, the ECM controls the remaining normal shift solenoid valve to allow the vehicle to be operated smoothly (Fail safe function).

Fail Safe Function:

If either of the shift solenoid valve circuits develops an open or short, the ECM turns the other shift solenoid ON and OFF to shift to the gear positions shown in the table below. The ECM also turns the shift solenoid valve SL OFF at the same time. If both solenoids are malfunction, hydraulic control cannot be performed electronically and must be done manually.

Manual shifting as shown in the following table must be done (In the case of a short circuit, the ECM stops sending current to the short circuited solenoid).

Position	NORMAL			SHIFT SOLENOID NO.1 MALFUNCTIONING			SHIFT SOLENOID NO.2 MALFUNCTIONING			BOTH SOLENOIDS MALFUNCTIONING
	Solenoid valve		Gear	Solenoid valve		Gear	Solenoid valve		Gear	Gear when shift selector is manually operated
	No.1	No.2		No.1	No.2		No.1	No.2		
D	ON	OFF	1st	X	ON	3rd	ON	X	1st	O/D
	ON	ON	2nd	X	ON	3rd	OFF	X	O/D	O/D
	OFF	ON	3rd	X	ON	3rd	OFF	X	O/D	O/D
	OFF	OFF	O/D	X	OFF	O/D	OFF	X	O/D	O/D
2	ON	OFF	1st	X	ON	3rd	ON	X	1st	3rd
	ON	ON	2nd	X	ON	3rd	OFF	X	3rd	3rd
	OFF	ON	3rd	X	ON	3rd	OFF	X	3rd	3rd
L	ON	OFF	1st	X	OFF	1st	ON	X	1st	1st
	ON	ON	2nd	X	ON	2nd	ON	X	1st	1st

X: Malfunctions

Check the shift solenoid valve No.1 when DTC P0753 is output and check the shift solenoid valve No.2 when DTC P0758 is output.

DTC No.	DTC Detecting Condition	Trouble Area
P0753 P0758	The ECM checks for an open or short circuit in the shift solenoid valves No.1 and No.2 circuit when it changes gear position. The ECM records DTC P0753 or P0758 if condition (a) or (b) is detected once, but it does not light up MIL. After 1 sec. ECM detects condition (a) or (b) in a trip again, it causes the MIL to light up. (a) When the solenoid is energized, the solenoid resistance is 8 Ω or less and is counted. (b) When the solenoid is not energized, the solenoid resistance is 100 kΩ or more and is counted.	●Open or short in shift solenoid valve No.1/No.2 circuit ●Shift solenoid valve No.1/No.2 ●ECM

WIRING DIAGRAM

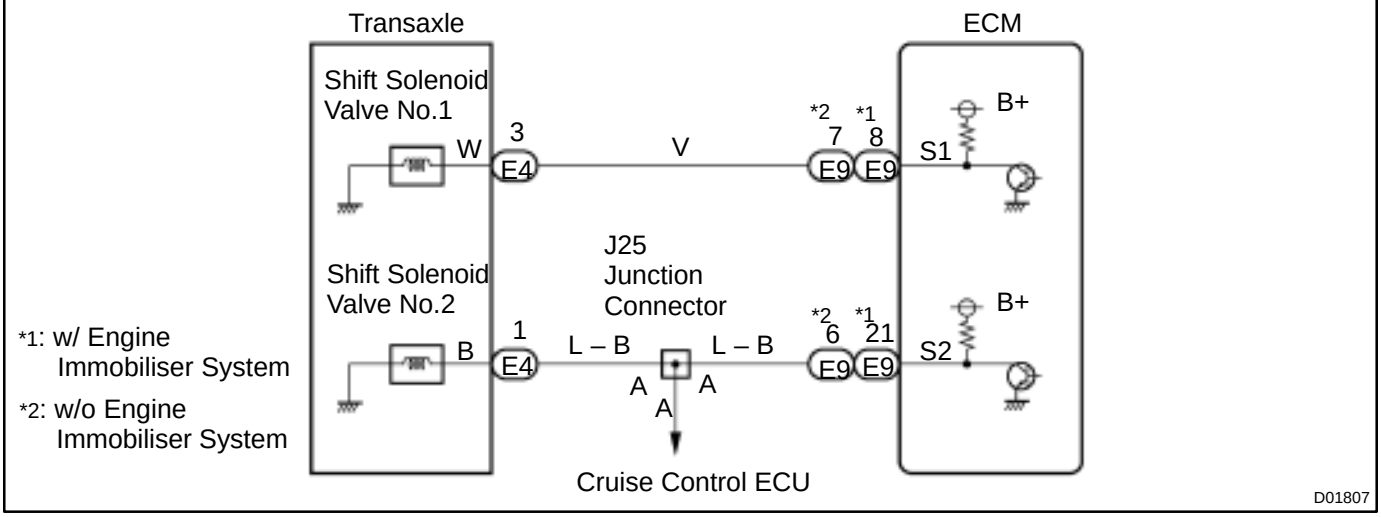

INSPECTION PROCEDURE

1	**Measure resistance between terminal S1 or S2 of ECM and body ground.**

w/ Engine Immobiliser System

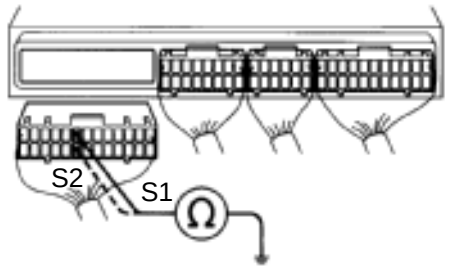

w/o Engine Immobiliser System

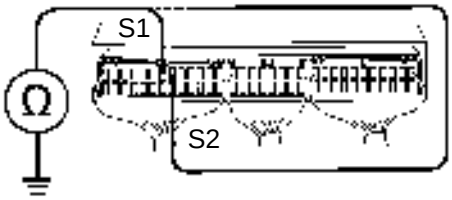

Q10102
D00102
D00990

PREPARATION:
Disconnect the connector from ECM.

CHECK:
Measure resistance between terminal S1 or S2 of ECM and body ground.

OK:

Resistance: 11 ~ 15 Ω

OK → **Check and replace the ECM.**

NG

2	**Check harness and connector between ECM and automatic transaxle solenoid connector.**

w/ Engine Immobiliser System

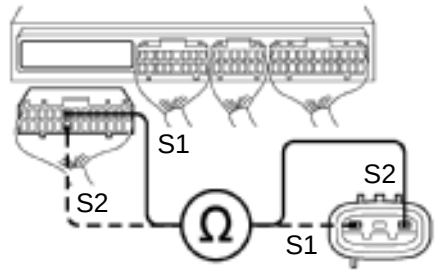

w/o Engine Immobiliser System

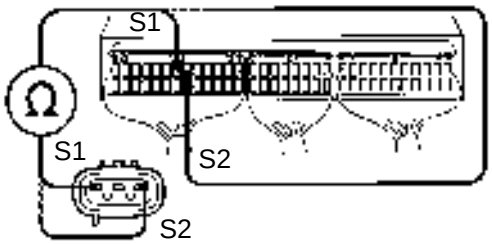

D00958
D00104

D00991

PREPARATION:

Disconnect the solenoid connector from the automatic transaxle.

CHECK:

Check the harness and connector between terminal S1 or S2 of ECM and terminal S1 or S2 of solenoid connector.

OK:

There is no open and no short circuit.

NG → **Repair or replace the harness or connector.**

OK

3	Check shift solenoid valve No.1 or No.2.

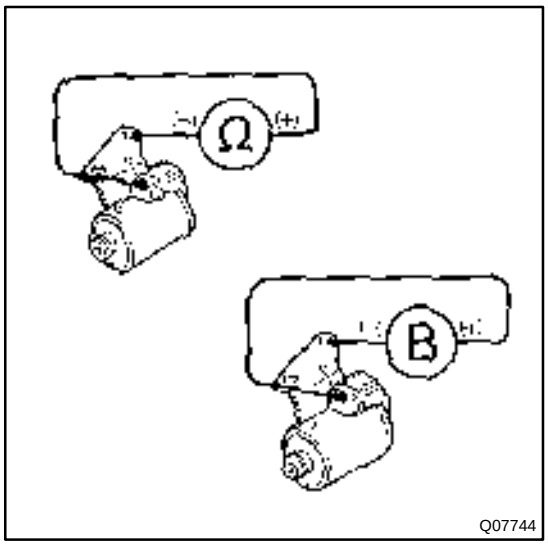

PREPARATION:

(a) Jack up the vehicle.
(b) Remove the oil pan.
(c) Disconnect the solenoid connector.
(d) Remove the shift solenoid valve No.1 or No.2.

CHECK:

(a) Measure resistance between solenoid connector and body ground.
(b) Connect the positive ~ lead to terminal of solenoid connector, negative > lead to solenoid body.

OK:

(a) Resistance: 11 ~ 15 Ω
(b) The solenoid makes an operating noise.

NG → **Replace the shift solenoid valve.**

OK

Repair or replace the solenoid wire.

DTC	P0770	Shift Solenoid E Malfunction (Shift Solenoid Valve SL)

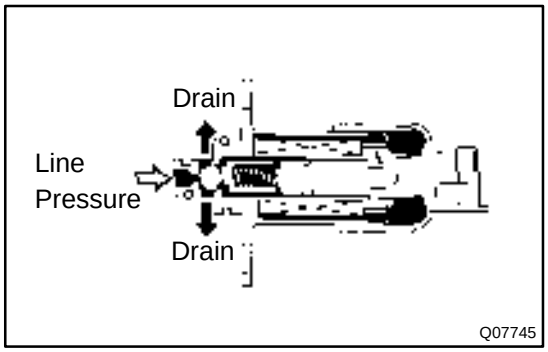

SYSTEM DESCRIPTION

The ECM uses the signals from the Throttle position sensor, Air–flow meter and Crankshaft position sensor to monitor the engagement condition of the lock–up clutch.
Then the ECM compares the engagement condition of the lock–up clutch with the lock–up schedule in the ECM memory to detect mechanical trouble of the shift solenoid valve SL, valve body, torque converter clutch or automatic transaxle (clutch, brake or gear etc.).

DTC No.	DTC Detecting Condition	Trouble Area
P0770	●Lock–up does not occur when driving in the lock–up range (normal driving at 80 km/h [50 mph]), or lock–up remains ON in the lock–up OFF range. (2 trip detection logic) ●When lock–up is ON, clutch or brake slips or gear is broken.	●Shift solenoid valve SL is stuck open or closed ●Valve body blocked up or stuck ●Lock–up clutch ●Automatic transaxle (clutch, brake or gear etc.)

INSPECTION PROCEDURE

1	Check solenoid valve SL operation.

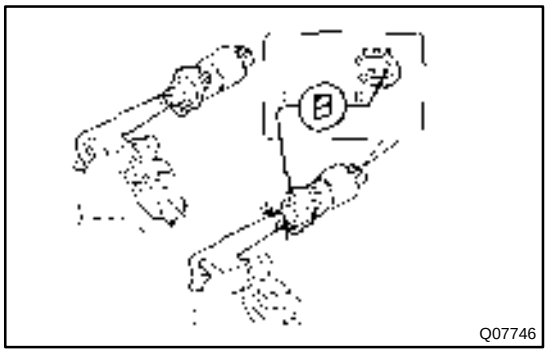

PREPARATION:
(a) Remove the oil pan.
(b) Remove the shift solenoid valve SL.

CHECK:
(a) By applying 490 kPa (5 kgf/cm^2, 71 psi) of compressed air, check that the solenoid valve does not leak air.
(b) When battery positive voltage is supplied to the shift solenoid valve, check that the solenoid valve opens.

OK:

(a) Solenoid valve does not leak air.
(b) Solenoid valve opens.

NG → **Replace the solenoid valve SL.**

OK

2	Check valve body (See page DI–405).

NG → Repair or replace the valve body.

OK

3	Check the torque converter clutch (See page AX–26).

NG → Replace the torque converter clutch.

OK

Repair or replace the transaxle.

DI035–02

DTC	P0773	Shift Solenoid E Electrical Malfunction (Shift Solenoid Valve SL)

CIRCUIT DESCRIPTION

The shift solenoid valve SL is turned ON and OFF by signals from the ECM to control the hydraulic pressure acting on the lock–up relay valve, which then controls operation of the lock–up clutch.

Fail safe function

If the ECM detects a malfunction, it turns the shift solenoid valve SL OFF.

DTC No.	DTC Detecting Condition	Trouble Area
P0773	Either (a) or (b) is detected for 1 time.(2 trip detection logic) (a) Solenoid resistance is 8 Ω or less short circuit when solenoid is energized. (b) Solenoid resistance is 100 kΩ or more open circuit when solenoid is not energized.	●Open or short in shift solenoid valve SL circuit ●Shift solenoid valve SL ●ECM

WIRING DIAGRAM

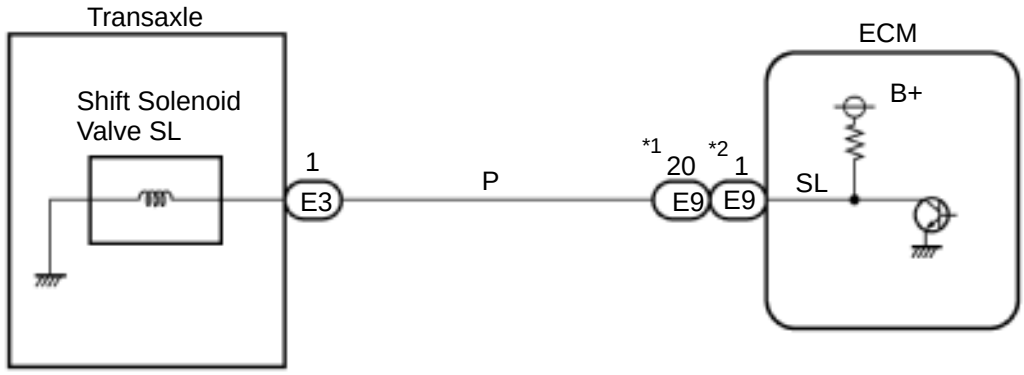

*1 : w/ Engine Immobiliser System

*2 : w/o Engine Immobiliser System

D01808

INSPECTION PROCEDURE

1	**Measure resistance between terminal SL of ECM and body ground.**

w/ Engine Immobiliser System

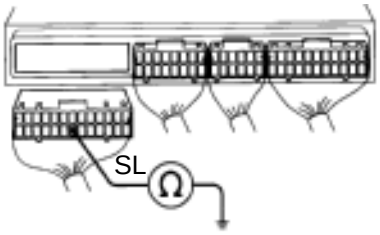

w/o Engine Immobiliser System

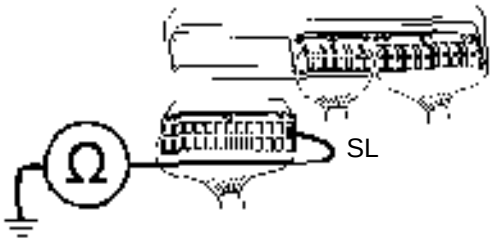

Q10099
Q07747 D00992

PREPARATION:
Disconnect the connector from ECM.
CHECK:
Measure resistance between terminal SL of ECM and body ground.
OK:
Resistance: 11 ~ 15 Ω

OK → **Check and replace the ECM.**

NG

2	**Check harness and connector between ECM and automatic transaxle solenoid connector.**

w/ Engine Immobiliser System

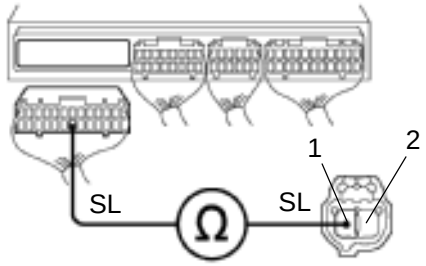

w/o Engine Immobiliser System

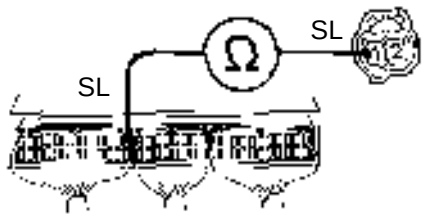

D00937
Q07748
D00993

PREPARATION:

Disconnect the solenoid connector from the transaxle.

CHECK:

Check the harness and connector between terminal SL of ECM and terminal SL of solenoid connector.

OK:

There is no open or short circuit.

NG → **Repair or replace the harness or connector.**

OK

3	Check shift solenoid valve SL.

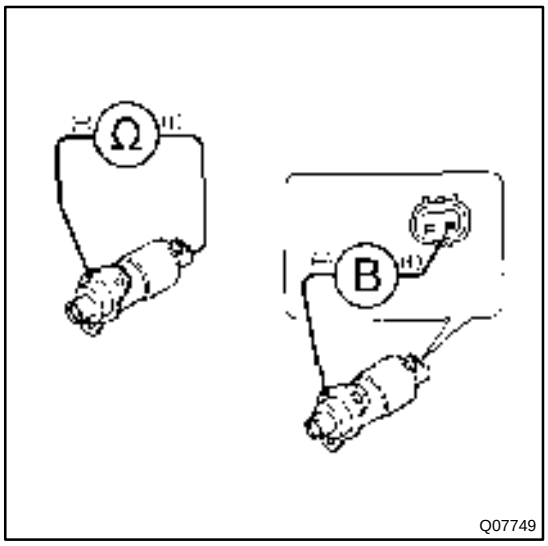

PREPARATION:

(a) Jack up the vehicle.
(b) Remove the oil pan.
(c) Disconnect the shift solenoid valve SL connector.
(d) Remove the shift solenoid valve SL.

CHECK:

(a) Measure resistance between terminal SL of shift solenoid valve and solenoid body.
(b) Connect positive ⊕ lead to terminal of solenoid connector, negative ⊖ lead to solenoid body.

OK:

(a) Resistance: 11 ~ 15 Ω
(b) The shift solenoid valve SL makes operation noise.

NG → **Replace the shift solenoid valve SL.**

OK

Check and replace or repair the solenoid wire.

DI036–02

DTC	P1520	Stop Light Switch Signal Malfunction

CIRCUIT DESCRIPTION

The purpose of this circuit is to prevent the engine from stalling, while driving in lock–up condition, when brakes are suddenly applied.
When the brake pedal is depressed, this switch sends a signal to ECM. Then the ECM cancels operation of the lock–up clutch while braking is in progress.

DTC No.	DTC Detecting Condition	Trouble Area
P1520	No stop light switch signal to ECM during driving. (2 trip detection logic)	●Open or short in stop light switch circuit ●Stop light switch ●ECM

WIRING DIAGRAM

See page DI–170.

INSPECTION PROCEDURE

See page DI–170.

DI037–02

DTC	P1780	Park/Neutral Position Switch Malfunction

CIRCUIT DESCRIPTION

The park/neutral position switch detects the shift lever position and sends signals to the ECM.
The ECM receives signals (NSW, R, 2 and L) from the park/neutral position switch. When the signal is not sent to the ECM from the park/neutral position switch, the ECM judges that the shift lever is in D position.

DTC No.	DTC Detection Condition	Trouble Area
P1780	When driving under conditions (a) and (b) for 30 seconds or more, the park/neutral position switch is ON (N position). (2 trip detection logic) (a) Vehicle speed: 80 km/h (50 mph) or more (b) Engine speed: 2,000 ~ 5,000 rpm	●Short in park/neutral position switch circuit ●Park/neutral position switch ●ECM

WIRING DIAGRAM

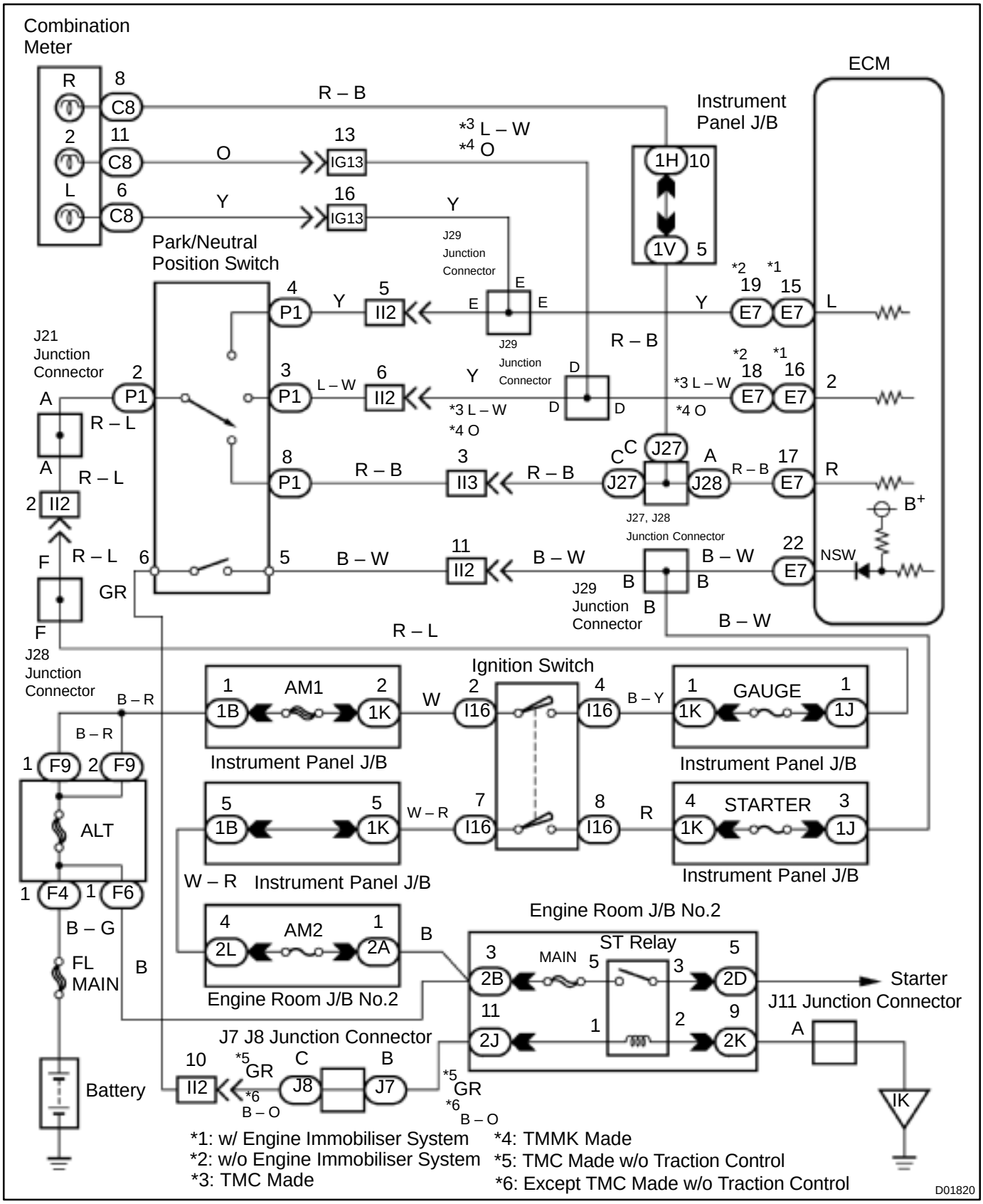

INSPECTION PROCEDURE

1	**Read PNP, REVERSE, 2ND and LOW signals.**

When using TOYOTA hand–held tester:

PREPARATION:

(a) Remove the DLC3 cover.
(b) Connect a TOYOTA hand–held tester to the DLC3.
(c) Turn the ignition switch ON and TOYOTA hand–held tester main switch ON.

CHECK:

Shift the shift lever into the P, R, N, 2 and L positions, and read the PNP, REVERSE, 2ND and LOW signals on the TOYOTA hand–held tester.

OK:

Shift position	Signal
2	2ND OFF → ON
L	LOW OFF → ON
R	REVERSE OFF → ON
P, N	PNP OFF → ON

When not using TOYOTA hand–held tester:

PREPARATION:

Turn the ignition switch ON.

CHECK:

Measure voltage between terminals NSW, 2, L and R of ECM and body ground when the shift lever is shifted in the following positions.

OK:

Position	NSW–Body ground	R–Body ground	2–Body ground	L–Body ground
P, N	0 V	0 V	0 V	0 V
R	9 ~ 14 V*	9 ~ 14 V*	0 V	0 V
D	9 ~ 14 V	0 V	0 V	0 V
2	9 ~ 14 V	0 V	9 ~ 14 V	0 V
L	9 ~ 14 V	0 V	0 V	9 ~ 14 V

HINT:

The voltage will drop slightly due to lighting up of the back up light.

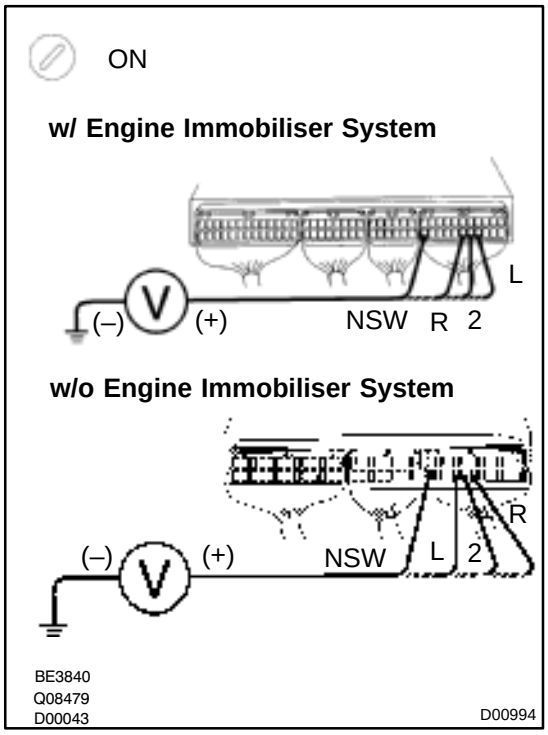

OK → **Proceed to next circuit inspection shown on matrix chart (See page DI–405).**

NG

2	**Check park/neutral position switch.**

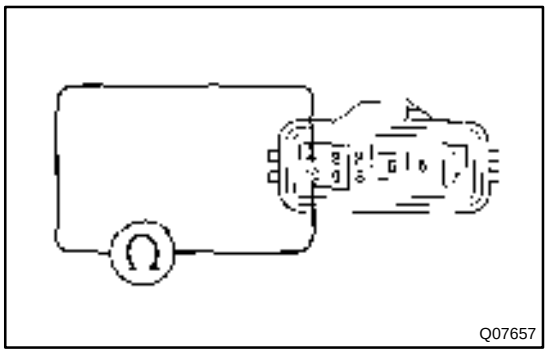

PREPARATION:

(a) Jack up the vehicle.

(b) Remove the park/neutral position switch.

CHECK:

Check continuity between each terminal shown below when the shift lever is moved to each position.

Shift Position	Terminal No. to continuity	Terminal No. to continuity
P	4 – 7	5 – 6
R	4 – 8	–
N	4 – 10	5 – 6
D	4 – 9	–
2	2 – 4	–
L	2 – 3	–

OK:

There is continuity.

NG → **Replace the park/neutral position switch.**

OK

3	**Check harness and connector between battery and park/neutral position switch, park/neutral position switch and ECM (See page IN–31).**

NG → **Repair or replace the harness and connector.**

OK

Check and replace the ECM.

DI038–02

O/D Cancel Signal Circuit

CIRCUIT DESCRIPTION

While driving uphill with cruise control activated, in order to minimize gear shifting and provide smooth cruising overdrive may be prohibited temporarily under some conditions.
The cruise control ECU sends O/D cut signals to the ECM as necessary and the ECM cancels overdrive shifting until these signals are discontinued.

WIRING DIAGRAM

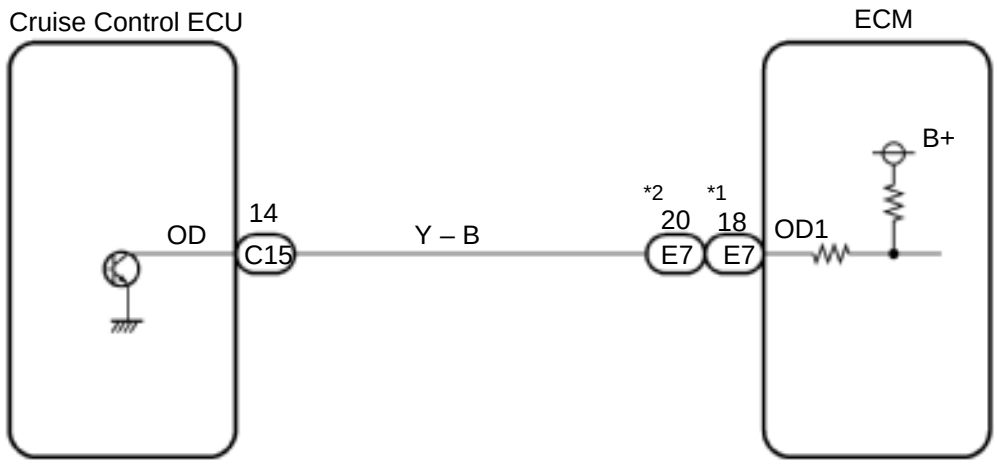

*1 : w/ Engine Immobiliser System
*2 : w/o Engine Immobiliser System

D01809

INSPECTION PROCEDURE

1	**Check voltage between terminal OD1 of ECM and body ground.**

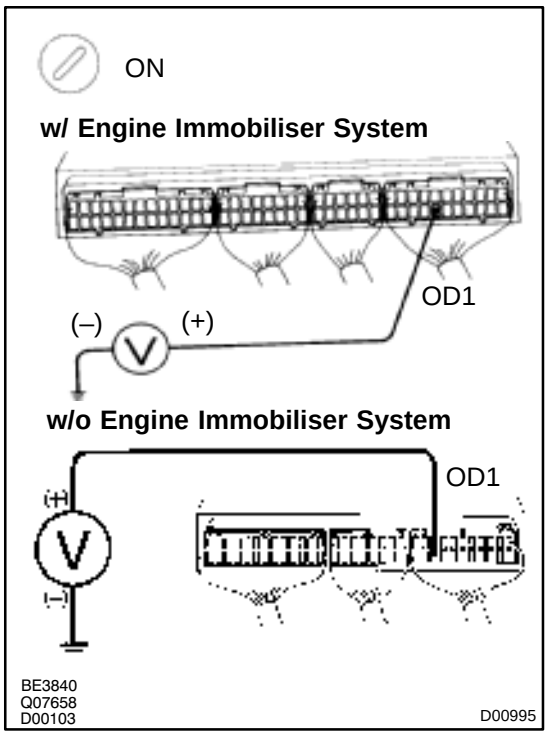

PREPARATION:
Turn the ignition switch ON.
CHECK:
Measure voltage between terminal OD1 of ECM and body ground.
OK:
Voltage: 9 ~ 14 V

OK	**Proceed to next circuit inspection shown on matrix chart (See page DI–405).**

NG

2	**Check voltage between terminal OD of cruise control ECU harness side connector and body ground.**

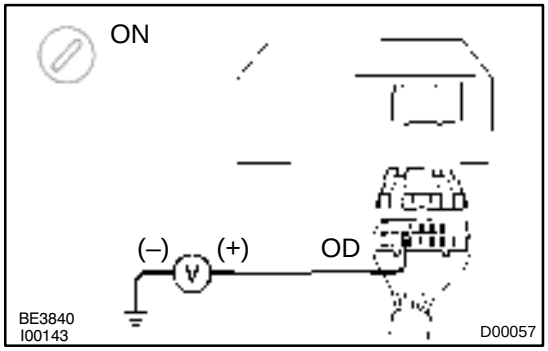

PREPARATION:
(a) Disconnect the cruise control ECU connector.
(b) Turn the ignition switch ON.
CHECK:
Measure voltage between terminal OD of cruise control ECU harness side connector and body ground.
OK:
Voltage: 9 ~ 14 V

OK	**Check and replace the cruise control ECU.**

NG

3	Check harness and connector between cruise control ECU and ECM.

NG → Repair or replace the harness or connector.

OK

Check and replace the ECM.

DI1J1–01

O/D Main Switch & O/D OFF Indictor Light Circuit

CIRCUIT DESCRIPTION

The O/D main switch contacts go open when the switch is pushed in and go closed when it is pushed out. In O/D main switch in OFF position, the O/D OFF indicator light lights up, and the ECM prohibits shifting overdrive.

WIRING DIAGRAM

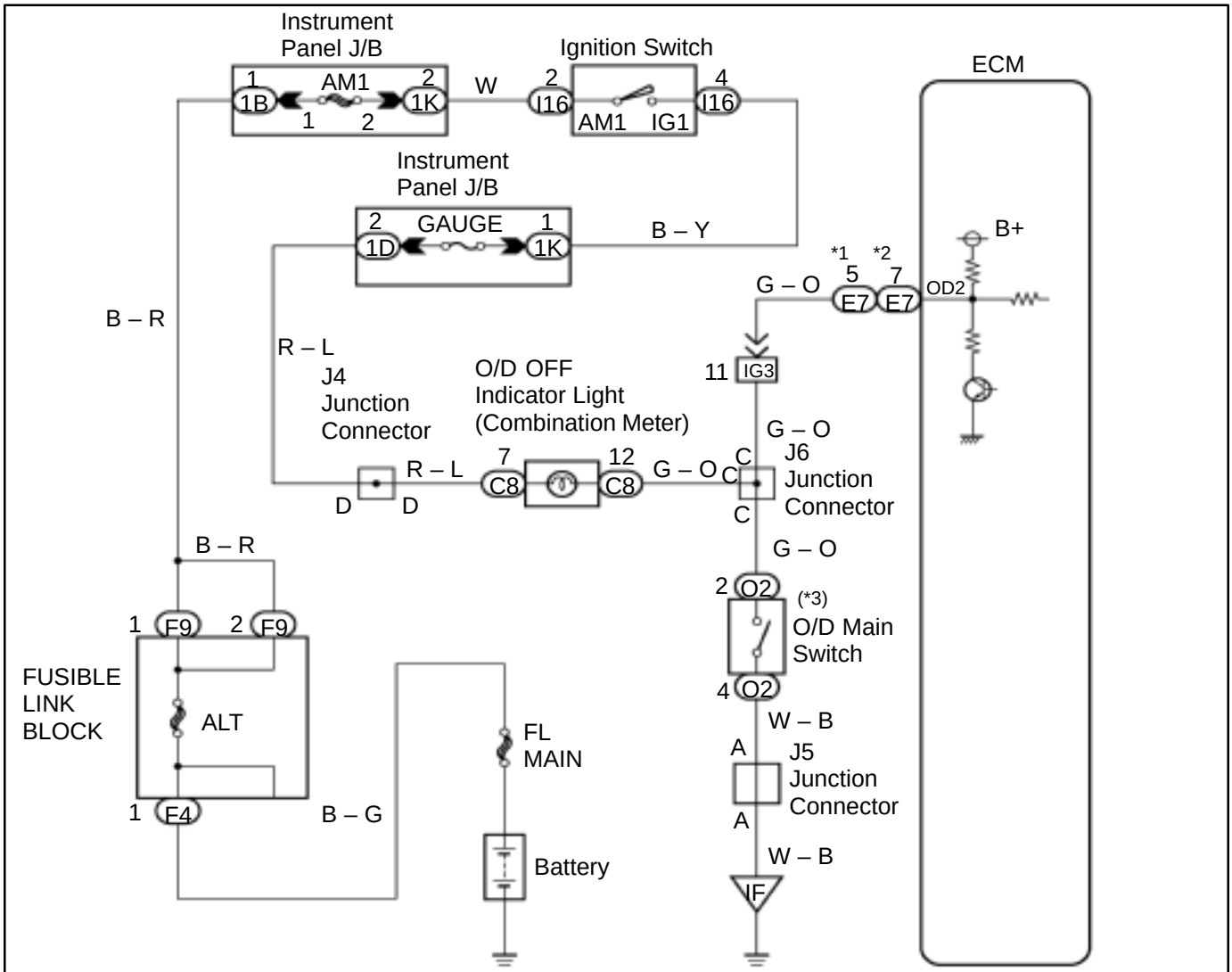

*1 : w/ Engine Immobiliser System

*2 : w/o Engine Immobiliser System

*3 : O/D Main Switch
Contacts go open with switch pushed in
Contacts go closed with switch pushed once again

D01810

INSPECTION PROCEDURE
O/D OFF indicator light does not light up

1	**Check O/D main switch.**

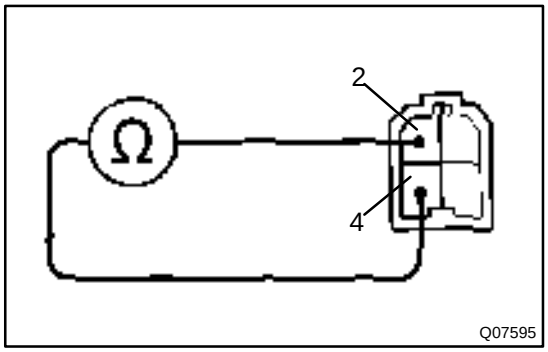

PREPARATION:
Disconnect the O/D main switch connector.
CHECK:
Check continuity at each terminal 2 and 4 of O/D main switch connector.
OK:

O/D main switch	Specified condition
ON	No continuity
OFF	Continuity

NG → **Replace the O/D main switch.**

OK

2	**Check and replace combination meter (See page BE–47).**

NG → **Replace the combination meter.**

OK

3	Check OVRDRIVE CUT SW2 signal.

When using TOYOTA hand–held tester:

PREPARATION:

(a) Remove the DLC3 cover.
(b) Connect TOYOTA hand–held tester to the DLC3.
(c) Turn the ignition switch ON and TOYOTA hand–held tester main switch ON.

CHECK:

Read the OVRDRIVE CUT SW2 signal on the TOYOTA hand–held tester.

OK:

O/D main switch condition	OVRDRIVE CUT SW2 signal
O/D ON (Pushed in)	OFF
O/D OFF (Pushed once again)	ON

When not using TOYOTA hand–held tester:

PREPARATION:

Turn the ignition switch ON.

CHECK:

Check voltage between terminal OD2 of ECM and body ground.

OK:

O/D main switch condition	Voltage
O/D ON (Pushed in)	9 ~ 14
O/D OFF (Pushed once again)	Below 1.5 V

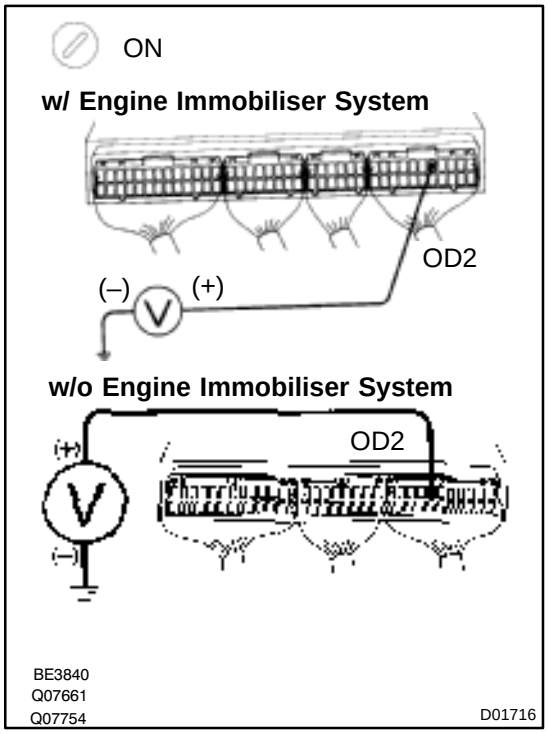

NG

OK → **Check and replace the ECM (See page IN–31).**

4	**Check harness and connector between O/D OFF indicator light and ECM (See page IN–31).**

NG → **Repair or replace the harness or connector.**

OK

Check and replace the ECM (See page IN–31).

O/D OFF indicator light remains ON

1	**Check O/D main switch.**

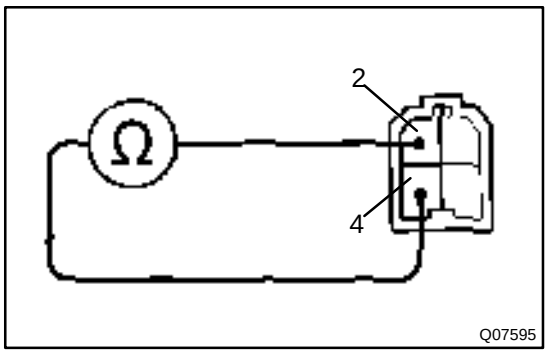

PREPARATION:
Disconnect the O/D main switch connector.
CHECK:
Check continuity at each terminal 2 and 4 of O/D main switch connector.
OK:

O/D main switch	Specified condition
ON	No continuity
OFF	Continuity

NG → **Replace the O/D main switch.**

OK ↓

2	**Check harness and connector between O/D OFF indicator light and O/D main switch, O/D OFF indicator light and ECM (See page IN–31).**

NG → **Repair or replace the harness or connector.**

OK ↓

Check and replace the ECM (See page IN–31).

AUTOMATIC TRANSAXLE (A541E)

DI02C–02

HOW TO PROCEED WITH TROUBLESHOOTING

Items inside ▱ are titles of pages in this manual, with the page number indicated in the bottom portion. See the indicated pages for detailed explanations.

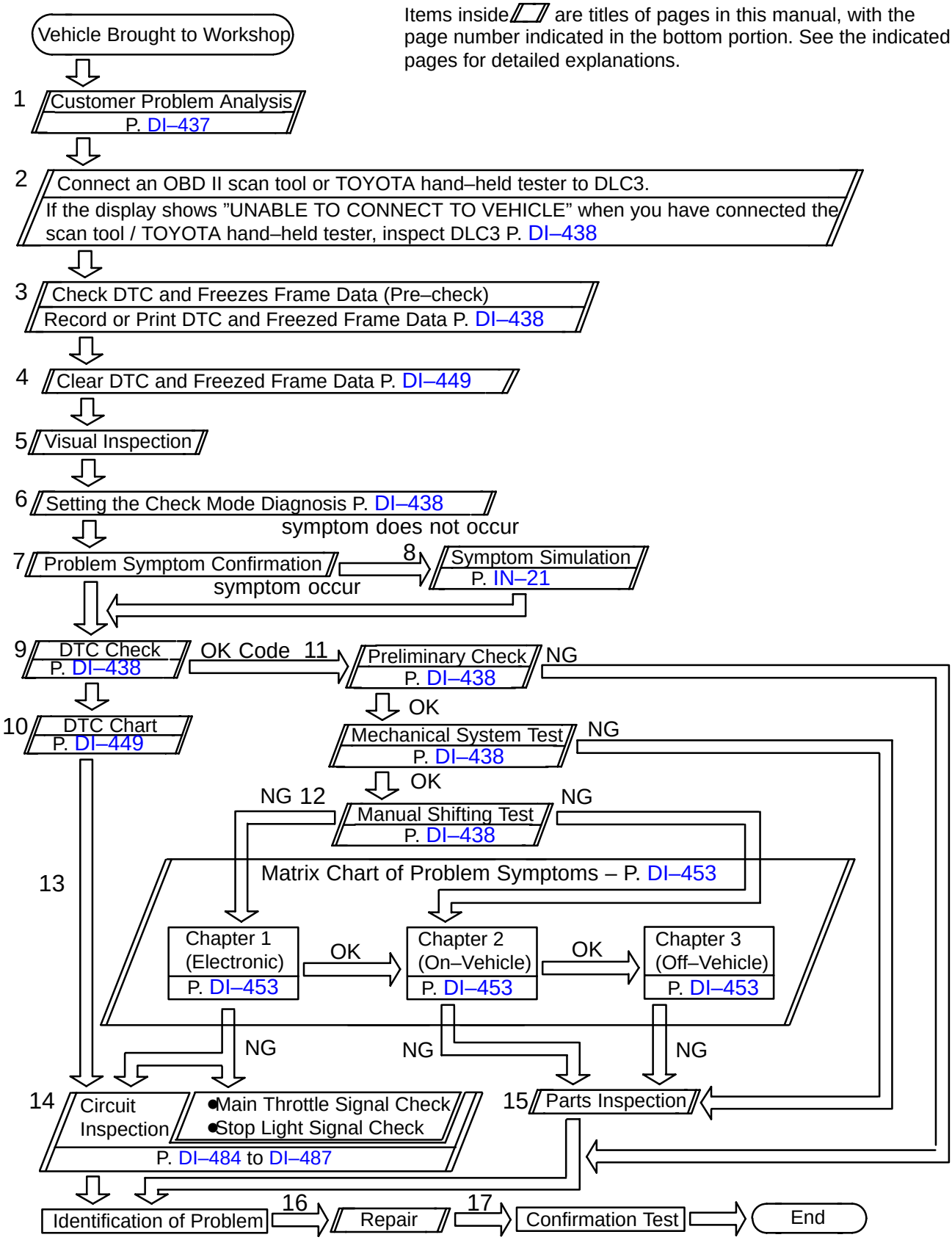

DI02D–01

CUSTOMER PROBLEM ANALYSIS CHECK

Transaxle Control System Check Sheet	Inspector's Name :

Customer's Name		Registration No.	
		Registration Year	/ /
		Frame No.	
Date Vehicle Brought In	/ /	Odometer Reading	km mile

Date Problem Occurred	/ /
How Often Does Problem Occur?	☐ Continuous ☐ Intermittent (times a day)

Symptoms	☐ Vehicle does not move (☐ Any position ☐ Particular position)
	☐ No up–shift (☐ 1st → 2nd ☐ 2nd → 3rd ☐ 3rd → O/D)
	☐ No down–shift (☐ O/D → 3rd ☐ 3rd → 2nd ☐ 2nd → 1st)
	☐ Lock–up malfunction
	☐ Shift point too high or too low
	☐ Harsh engagement (☐ N → D ☐ Lock–up ☐ Any drive position)
	☐ Slip or shudder
	☐ No kick–down
	☐ Others ( )

Check Item	Malfunction Indicator Lamp	☐ Normal ☐ Remains ON

DTC Check	1st Time	☐ Normal code	☐ Malfunction code (Code)
	2nd Time	☐ Normal code	☐ Malfunction code (Code)

DI02E–02

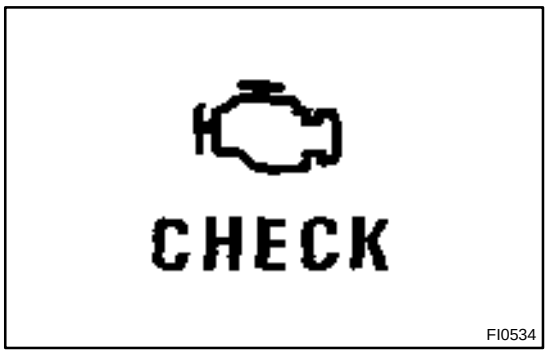

PRE–CHECK

1. DIAGNOSIS SYSTEM

(a) Description

- When troubleshooting OBD II vehicles, the only difference from the usual troubleshooting procedure is that you connect to the vehicle an OBD II scan tool complying with SAE J1987 or TOYOTA hand–held tester, and read off various data output from the vehicle's ECM.
  OBD II regulations require that the vehicle's on–board computer lights up the Malfunction Indicator Lamp (MIL) on the instrument panel when the computer detects a malfunction in the computer itself or in drive system components which affect vehicle emissions. In addition to the MIL lighting up when a malfunction is detected, the applicable DTCs prescribed by SAE J2012 are recorded in the ECM memory. (See page DI–211)
  If the malfunction only occurs in 3 trips, the MIL goes off but the DTCs remain recorded in the ECM memory.

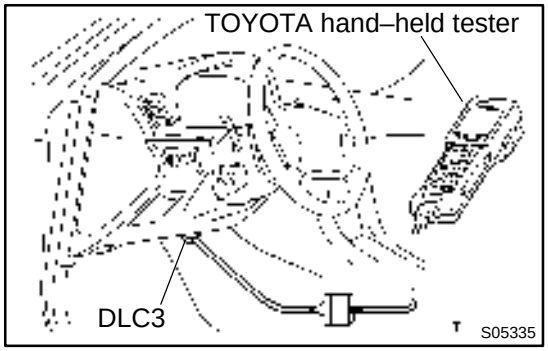

- To check the DTCs, connect an OBD II scan tool or TOYOTA hand–held tester to DLC3 on the vehicle. The OBD II scan tool or TOYOTA hand–held tester also enables you to erase the DTCs and check freeze frame data and various forms of engine data (For instruction book).
  DTCs include SAE controlled codes and Manufacturer controlled codes.
  SAE controlled codes must be set as prescribed by the SAE, while Manufacturer controlled codes can be set freely by the manufacturer within the prescribed limits (See DTC chart on page DI–449).

- The diagnosis system operates in normal mode during normal vehicle use, and also has a check mode for technicians to simulate malfunction symptoms and perform troubleshooting. Most DTCs use 2 trip detection logic(*) to prevent erroneous detection. By switching the ECM to check mode when troubleshooting, the technician can cause the MIL to light up and for a malfunction that is only detected once or momentarily.
  (TOYOTA hand–held tester) (See page DI–438)
- *2 trip detection logic:
  When a logic malfunction is first detected, the malfunction is temporarily stored in the ECM memory. If the same malfunction is detected again during the 2nd test drive, this 2nd detection causes the MIL to light up.

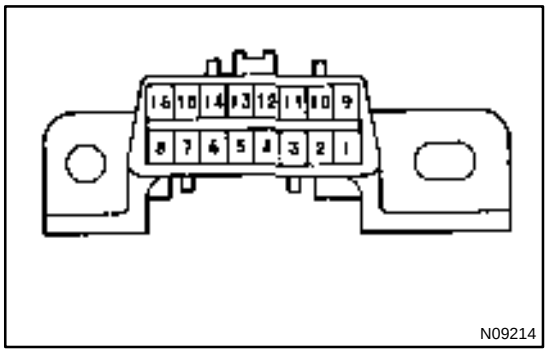

(b) Inspect the DLC3.
The vehicle's ECM uses ISO 9141–2 for communication. The terminal arrangement of DLC3 complies with SAE J1962 and matches the ISO 9141–2 format.

Tester connection	Condition	Specified condition
7 (Bus ~ Line) – 5 (Signal ground)	During communication	Pulse generation
4 (Chassis Ground) – Body	Always	1 Ω or less
5 (Signal Ground) – Body	Always	1 Ω or less
16 (B+) – Body	Always	9 – 14 V

HINT:
If your display shows "UNABLE TO CONNECT TO VEHICLE" when you have connected the cable of OBD II scan tool or TOYOTA hand–held tester to DLC3, turned the ignition switch ON and operated the scan tool, there is a problem on the vehicle side or tool side.

(1) If communication is normal when the tool is connected to another vehicle, inspect DLC3 on the original vehicle.
(2) If communication is still not possible when the tool is connected connected to another vehicle, the problem is probably in the tool itself, so consult the Service Department listed in the tool's instruction manual.

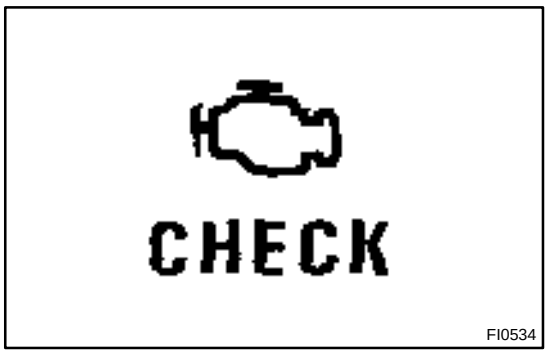

2. INSPECT DIAGNOSIS (NORMAL MODE)

(a) Check the MIL.

(1) The MIL comes on when the ignition switch is turned ON and the engine is not running.

HINT:

If the MIL does not light up, troubleshoot the combination meter (See page BE–2).

(2) When the engine is started, the MIL should go off. If the lamp remains on, the diagnosis system has detected a malfunction or abnormality in the system.

(b) Check the DTC.

NOTICE:

TOYOTA hand–held tester only:

When the diagnostic system is switched from normal mode to check mode, it erases all DTCs and freeze frame data recorded in normal mode. So before switching modes, always check the DTCs and freeze frame data, and note them down.

(1) Prepare an OBD II scan tool (complying with SAE J1978) or TOYOTA hand–held tester.

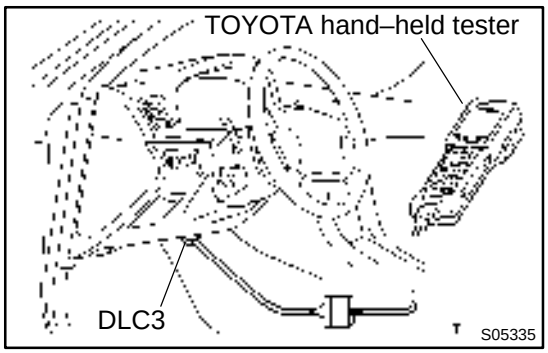

(2) Connect the OBD II scan tool or TOYOTA hand–held tester to DLC3 at the lower of the instrument panel.

(3) Turn the ignition switch ON and turn the OBD II scan tool or TOYOTA hand–held tester switch ON.

(4) Use the OBD II scan tool or TOYOTA hand–held tester to check the DTCs and freeze frame data and note them down (For operating instructions, see the OBD II scan tool's instruction book).

(5) See page DI–449 to confirm the details of the DTCs.

NOTICE:

When simulating symptoms with an OBD II scan tool (excluding TOYOTA hand–held tester) to check the DTCs, use normal mode. For codes on the DTCs chart subject to "2 trip detection logic", turn the ignition switch off after the symptoms have been simulated the 1st time. Them repeat the simulation process again. When the program has DTCs are recorded in the ECM.

3. INSPECT DIAGNOSIS (CHECK MODE)

HINT:

TOYOTA hand–held tester only: Compared to the normal mode, the check mode has high sensing ability to detect malfunctions. Furthermore, the same diagnostic items which are detected in Normal mode can also be detected in Check mode.

(a) Check the DTC.

(1) Check the initial conditions.

- Battery positive voltage 11 V or more.
- Throttle valve fully closed.
- Transaxle in P position.
- Air conditioning switched off.

(2) Turn the ignition switch OFF.

(3) Prepare a TOYOTA hand–held tester.

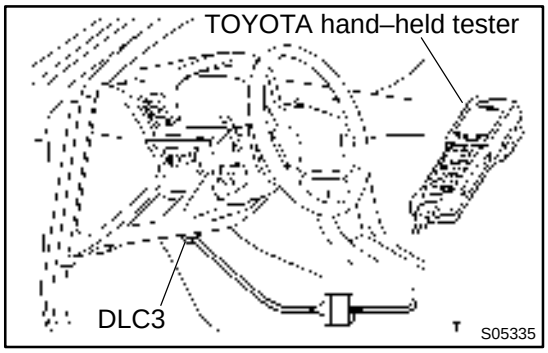

(4) Connect the TOYOTA hand–held tester to DLC3 at the lower of the instrument panel.

(5) Turn the ignition switch ON and switch the TOYOTA hand–held tester ON.

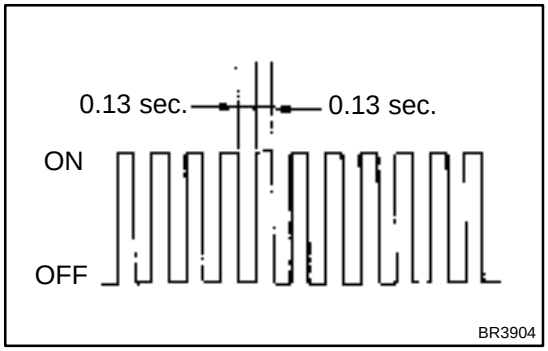

(6) Switch the TOYOTA hand–held tester from Normal mode to Check mode (Check that the MIL flashes).

(7) Start the engine (MIL goes out after the engine starts).

(8) Simulate the conditions of the malfunction described by the customer.

NOTICE:

Leave the ignition switch ON until you have checked the DTCs, etc..

(9) After simulating the malfunction conditions, use the TOYOTA hand–held tester diagnosis selector to check the DTCs and freeze frame data, etc..

HINT:

Take care not to turn the ignition switch OFF, as turning it off switches the diagnosis system from Check mode to Normal mode, so all DTCs, etc. are erased.

(10) After checking the DTC, inspect the applicable circuit.

(b) Clearance the DTC.
The following actions will erase the DTC and freezed frame data. Operating an OBD II scan tool (complying with SAE J1978) or TOYOTA hand–held tester to erase the codes.
(See the OBD II scan tool's instruction book for operating instructions.)

4. ROAD TEST

NOTICE:

Perform the test at normal operating ATF temperature 50 – 80 °C (122 – 176 °F).

(a) D POSITION TEST
Shift into the D position and fully depress the accelerator pedal and and check the following points:
(1) Check up–shift operation.
1 → 2, 2 → 3 and 3 → O/D up–shift takes place, at the shift point shown in the automatic shift schedule (See page SS–56).

HINT:

- O/D Gear Up–shift Prohibition Control (1. Coolant temp. is 60 °C (140 °F) or less. 2. If there is a 10 km/h (6 mph) difference between the set cruise control speed and vehicle speed.)
- O/D Gear Lock–up Prohibition Control (1. Brake pedal is depressed. 2. Coolant temp. is 60 °C (140 °F) or less.)

(2) Check for shift shock and slip.
Check for shock and slip at the 1 → 2, 2 → 3 and 3 → O/D up–shifts.
(3) Check for abnormal noises and vibration.
Run at the D position lock–up or O/D gear and check for abnormal noises and vibration.

HINT:

The check for the cause of abnormal noises and vibration must be done very thoroughly as it could also be due to loss of balance in the differential torque converter clutch, etc..

(4) Check kick–down operation.
While running in the D position, 2nd, 3rd and O/D gears, check to see that the possible kick–down vehicle speed limits for 2 → 1, 3 → 2 and O/D → 3 kick–downs conform to those indicated on the automatic shift schedule (See page SS–56).
(5) Check abnormal shock and slip at kick–down.
(6) Check the lock–up mechanism.
- Drive in D position, O/D gear, at a steady speed (lock–up ON) of about 60 km/h (37 mph).
- Lightly depress the accelerator pedal and check that the engine speed does not change abruptly.

If there is a big jump in engine speed, there is no lock–up.

(b) 2 POSITION TEST
Shift into the 2 position and fully depress the accelerator pedal and check the following points:
(1) Check up–shift operation.
Check to see that the 1 → 2 up–shift takes place and that the shift point conforms to the automatic shift schedule (See page SS–56).

HINT:

There is no O/D up–shift and lock–up in the 2 position.

(2) Check engine braking.
While running in the 2 position and 2nd gear, release the accelerator pedal and check the engine braking effect.
(3) Check for abnormal noises during acceleration and deceleration, and for shock at up–shift and down–shift.

(c) L POSITION TEST

Shift into the 2 position and fully depress the accelerator pedal and check the following points:

(1) Check no up–shift.
While running in the L position, check that there is no up–shift to 2nd gear.

(2) Check engine braking.
While running in the L position, release the accelerator pedal and check the engine braking effect.

(3) Check for abnormal noises during acceleration and deceleration.

(d) R POSITION TEST

Shift into the R position and fully depress the accelerator pedal and check for slipping.

CAUTION:

Before conducting this test ensure that the test area is free from people and obstruction.

(e) P POSITION TEST

Stop the vehicle on a grade (more than 5°) and after shifting into the P position, release the parking brake. Then, check to see that the parking lock pawl holds the vehicle in place.

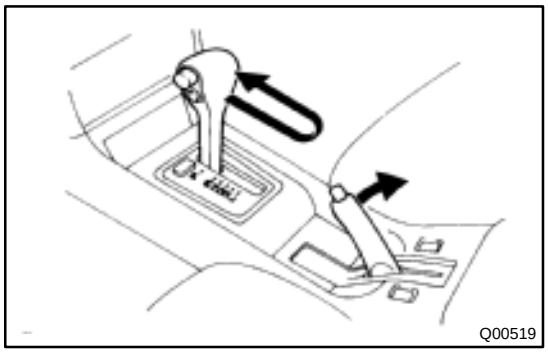

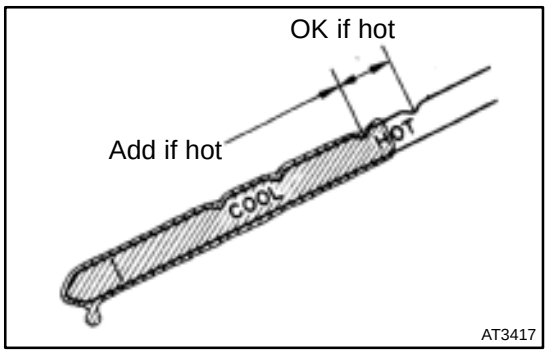

5. BASIC INSPECTION

(a) Check the fluid level.

HINT:

- Drive the vehicle so that the engine and transaxle are at normal operating temperature.
  Fluid temp.: 70 – 80 °C (158 – 176 °F)
- Only use the COOL range on the dipstick as a rough reference when the fluid is replaced or the engine does not run.

(1) Park the vehicle on a level surface and set the parking brake.

(2) With the engine idling and the brake pedal depressed, shift the shift lever into all positions from P to L position and return to P position.

(3) Pull out the dipstick and wipe it clean.

(4) Push it back fully into the pipe.

(5) Pull it out and check that the fluid level is in the HOT range.

If the level is at the low side, add new fluid.

Fluid type: ATF D–II or DEXRON®III (DEXRON®II)

NOTICE:

Do not overfill.

(b) Check the fluid condition.

If the level is at the low side, add new fluid.

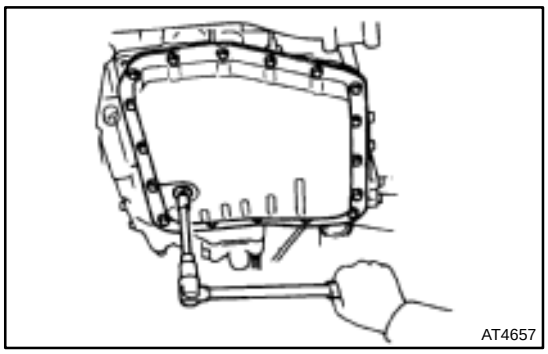
AT4657

(c) Replace the ATF.
(1) Remove the drain plug and drain the fluid.
(2) Reinstall the drain plug securely.

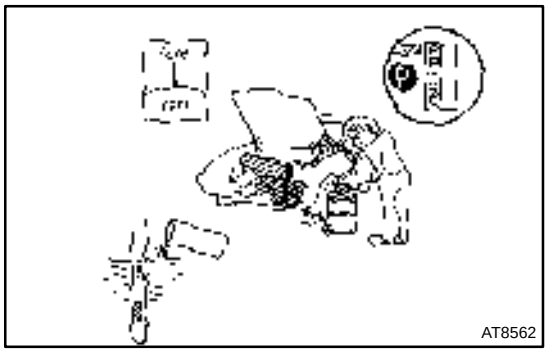
AT8562

(3) With the engine OFF add new fluid through the oil filler pipe.

Fluid type: ATF D–II or DEXRON®III (DEXRON®II)
Capacity: 3.9 liters (4.1 US qts, 3.4 Imp. qts)

(4) Start the engine and shift the shift lever into all positions from P to L position and then shift into P position.

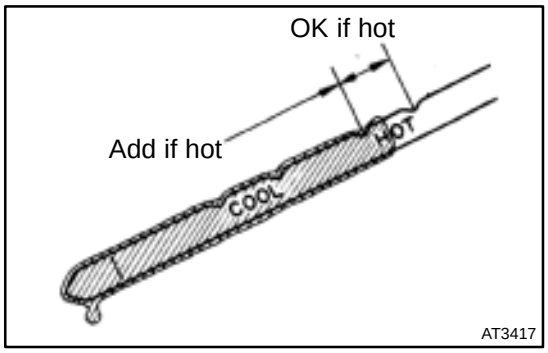

AT3417

(5) With the engine idling, check the fluid level. Add fluid up to the COOL level on the dipstick.
(6) Check the fluid level at the normal operating temperature, 70 – 80 °C (158 – 176 °F), and add as necessary.

NOTICE:
Do not overfill.

(d) Check the fluid leaks.
Check for leaks in the transaxle.

If there are leaks, it is necessary to repair or replace O–rings, gasket, oil seals, plugs or other parts.

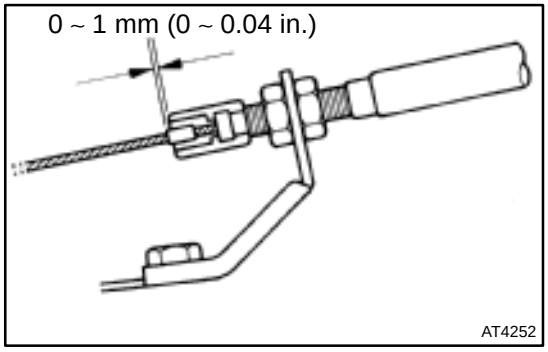

AT4252

(e) Inspect and adjust the throttle cable.
(1) Check that the accelerator pedal is fully released.
(2) Check that the inner cable is not slack.
(3) Measure the distance between the outer cable end and stopper on the cable.

Standard distance: 0 – 1 mm (0 – 0.04 in.)

If the distance is not the standard, adjust the cable by the adjusting nuts.

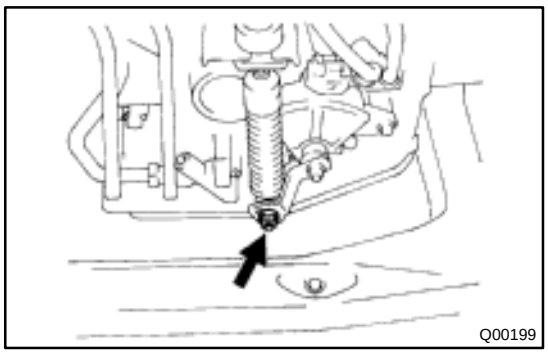
Q00199

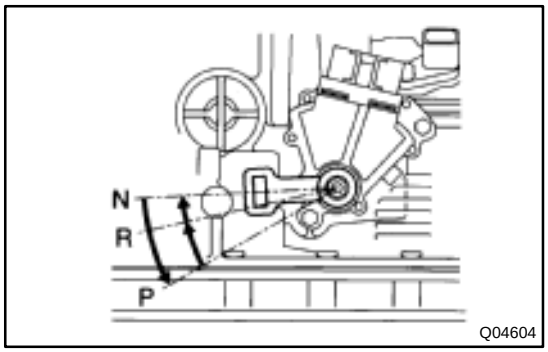

Q04604

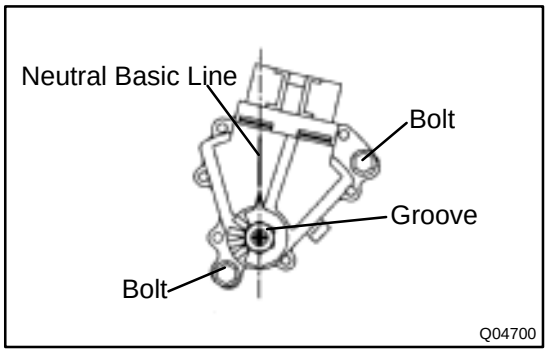

Q04700

(f) Inspect and adjust the shift lever position.
When shifting the shift lever from the N position to other positions, check that the lever can be shifted smoothly and accurately to each position and that the position indicator is not aligned with the correct position.

If the indicator is not aligned with the correct position, carry out the following adjustment procedures.

(1) Loosen the nut on the shift lever.
(2) Push the control shaft fully rearward.
(3) Return the control shaft lever 2 notches to N position.
(4) Set the shift lever to N position.
(5) While holding the shift lever lightly toward the R position side, tighten the shift lever nut.

Torque: 13 N·m (130 kgf·cm, 9 ft·lbf)

(6) Start the engine and make sure that the vehicle moves forward when shifting the lever from the N to D position and reverses when shifting it to the R position.

(g) Inspect and adjust the park/neutral position.
Check that the engine can be started with the shift lever only in the N or P position, but not in other positions.

If it is not as stated above, carry out the following adjustment procedures.

(1) Loosen the park/neutral position switch bolt and set the shift lever to the N position.
(2) Align the groove and neutral basic line.
(3) Hold in position and tighten the bolt.

Torque: 5.4 N·m (55 kgf·cm, 48 in·lbf)

For continuity inspection of the park/neutral position switch, see page DI–479.

(h) Check the idle speed.

Idle speed: 700 ± 50 rpm
(In N position and air conditioner OFF)

6. MECHANICAL SYSTEM TESTS

(a) Measure the stall speed.
The object of this test is to check the overall performance of the transaxle and engine by measuring the stall speeds in the D and R positions.

NOTICE:

- **Do the test at normal operating fluid temperature 50 – 80 ˚C (122 – 176 ˚F).**
- **Do not continuously run this test longer than 5 seconds.**
- **To ensure safety, conduct this test in a wide, clear level area which provides good traction.**
- **The stall test should always be carried out in pairs. One technician should observe the conditions of wheels or wheel stoppers outside the vehicle while the other is doing the test.**

(1) Chock the 4 wheels.
(2) Connect an OBD II scan tool or TOYOTA hand–held tester to DLC3.
(3) Fully apply the parking brake.
(4) Keep your left foot pressed firmly on the brake pedal.
(5) Start the engine.

(6) Shift into the D position. Press all the way down on the accelerator pedal with your right foot. Quickly read the stall speed at this time.

Stall speed: 2,600 ± 150 rpm

(7) Do the same test in R position.

Stall speed: 2,600 ± 150 rpm

Evaluation:

Problem	Possible cause
(a) Stall speed low in D and R positions	●Engine output may be insufficient ●Stator one–way clutch is operating properly HINT: If more than 600 rpm below the specified value, the torque converter could be faulty.
(b) Stall speed high in D position	●Line pressure too low ●Forward clutch slipping ●No.2 one–way clutch not operating properly ●O/D clutch slipping
(c) Stall speed high in R position	●Line pressure too low ●Direct clutch slipping ●1st and reverse brake slipping ●O/D clutch slipping
(d) Stall speed high in D and R positions	●Line pressure too low ●Improper fluid level ●O/D one–way clutch not operating properly

(b) Measure the time lag.

When the shift lever is shifted while the engine is idling, there will be a certain time lapse or lag before the shock can be felt. This is used for checking the condition of the O/D direct clutch, forward clutch, and 1st and reverse brake.

NOTICE:

- **Do the test at normal operating fluid temperature 50 – 80 °C (122 – 176 °F).**
- **Be sure to allow 1 minute interval between tests.**
- **Take 3 measurements and take the average value.**

(1) Connect an OBD II scan tool or TOYOTA hand–held tester to DLC3.

(2) Fully apply the parking brake.

(3) Start the engine and check idle speed.

Idle speed: 700 ± 50 rpm (In N position and air conditioner OFF)

(4) Shift the shift lever from N to D position. Using a stop watch, measure the time from when the lever is shifted until the shock is felt.

In the same manner, measure the time lag for N → R.

Time lag:

N → D Less than 1.2 seconds

N → R Less than 1.5 seconds

Evaluation (If N → D time or N → R time lag is longer than specified):

Problem	Possible cause
N → D time lag is longer	●Line pressure too low ●Forward clutch worn ●O/D one–way clutch not operating
N → R time lag is longer	●Line pressure too low ●Direct clutch worn ●1st and reverse brake worn ●O/D one–way clutch not operating properly

7. HYDRAULIC TEST

Measure the line pressure

NOTICE:

- **Do the test at normal operation fluid temperature 50 – 80 ˚C (122 – 176 ˚F).**
- **The line pressure test should always be carried out in pairs. One technician should observe the conditions of wheels or wheel stoppers outside the vehicle while the other is doing the test.**
- **Be careful to prevent SST's hose from interfering with the exhaust pipe.**

(1) Warm up the ATF.

(2) Remove the test plug on the transaxle case front left side and connect SST.
(See page AX–21 for the location to connect SST)

SST 09992–00095 (09992–00231, 09992–00271)

(3) Fully apply the parking brake and chock the 4 wheels.

(4) Connect an OBD II scan tool or TOYOTA hand–held tester to DLC3.

(5) Start the engine and check idling speed.

(6) Keep your left foot pressed firmly on the brake pedal and shift into D position.

(7) Measure the line pressure when the engine is idling.

(8) Depress the accelerator pedal all the way down. Quickly read the highest line pressure when engine speed reaches stall speed.

(9) In the same manner, do the test in R position.

Specified line pressure:

Condition	D position kPa (kgf/cm^2, psi)	R position kPa (kgf/cm^2, psi)
Idling	401 – 461 (4.1 – 4.7, 58 – 66)	804 – 882 (8.2 – 9.0, 117 – 128)
Stall	1,138 – 1,236 (11.6 – 12.6, 165 – 179)	1,716 – 1,854 (17.5 – 18.9, 249 – 269)

If the measured pressure is not up to specified value, recheck the throttle cable adjustment and retest.

Evaluation

Problem	Possible cause
If the measured values at all position are higher	●Throttle cable out of adjustment ●Throttle valve defective ●Regulator valve defective
If the measured values at all position are lower	●Throttle cable out of adjustment ●Throttle valve defective ●Regulator valve defective ●Oil pump defective ●O/D direct clutch defective
If pressure is low in the D position only	●D position circuit fluid leakage ●Forward clutch defective
If pressure is low in the R position only	●R position circuit fluid leakage ●Direct clutch defective ●1st and reverse brake defective

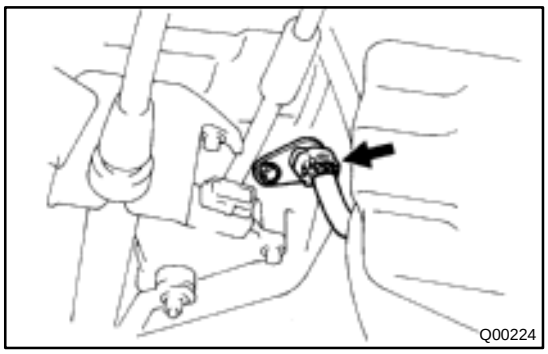

8. MANUAL SHIFTING TEST

HINT:

With this test, it can be determined whether the trouble is within the electrical circuit or is a mechanical problem in the transaxle.

(a) Disconnect the solenoid wire.

(b) Inspect the manual driving operation.

Check that the shift and gear positions correspond with the table below.

While driving, shift through the L, 2 and D positions. Check that the gear change corresponds to the shift position.

Shift Position	Gear Position
D	O/D
2	O/D
L	1st
R	Reverse
P	Pawl Lock

HINT:

If the L, 2 and D position gear positions are difficult to positions are difficult to distinguish, do the following read test.

If any abnormality is found in the above test, the problem is in the transaxle itself.

(c) Connect the solenoid wire.

(d) Cancel out the DTC (See page DI–438).

DI02F–02

DIAGNOSTIC TROUBLE CODE CHART

If a DTC is displayed during the DTC check, check the circuit listed for that code in the table below and proceed to the page given.

* : –...MIL does not light /● ...MIL light up

DTC No. (See Page)	Detection Item	Trouble Area	MIL *	Memory
P0500 (DI–456)	Vehicle Speed Sensor Malfunction (No.1 Vehicle Speed Sensor)	□Open or short in No.1 vehicle speed sensor circuit □No.1 vehicle speed sensor □Combination meter □ECM □Automatic transaxle (clutch, brake or gear etc.)	●	○
P0750 (DI–460)	Shift Solenoid A Malfunction (Shift Solenoid Valve No.1)	□Shift solenoid valve No.1 is stuck open or closed □Valve body is blocked up or stuck □Automatic transaxle (clutch, brake or gear etc.)	●	○
P0753 (DI–462)	Shift Solenoid A Electrical Malfunction (Shift Solenoid Valve No.1)	□Open or short in shift solenoid valve No.1 circuit □Shift solenoid valve No.1 □ECM	●	○
P0755 (DI–460)	Shift Solenoid B Malfunction (Shift Solenoid Valve No.2)	□Shift solenoid valve No.2 is stuck open or closed □Valve body is blocked up or stuck □Automatic transaxle (clutch, brake or gear etc.)	●	○
P0758 (DI–462)	Shift Solenoid B Electrical Malfunction (Shift Solenoid Valve No.2)	□Open or short in shift solenoid valve No.2 circuit □Shift solenoid valve No.2 □ECM	●	○
P0770 (DI–466)	Shift Solenoid E Malfunction (Shift Solenoid Valve SL)	□Shift solenoid valve SL is stuck open or closed □Valve body is blocked up or stuck □Lock–up clutch □Automatic transaxle (clutch, brake or gear etc.)	●	○
P0773 (DI–468)	Shift Solenoid E Electrical Malfunction (Shift Solenoid Valve SL)	□Open or short in shift solenoid valve SL circuit □Shift solenoid valve SL □ECM	●	○
P1520 (DI–472)	Stop Light Switch Signal Malfunction	□Open or short in stop light switch circuit □Stop light switch □ECM	●	○
P1705 (DI–473)	NC2 Revolution Sensor Circuit Malfunction (Direct Clutch Speed Sensor)	□Open or short in direct clutch speed sensor circuit □Direct clutch speed sensor □ECM	●	○
P1765 (DI–476)	Linear Solenoid for Accumulator Pressure Control Circuit Malfunction (Shift Solenoid Valve SLN)	□Open or short in shift solenoid valve SLN circuit □Shift solenoid valve SLN □ECM	●	○
P1780 (DI–479)	Park/Neutral Position Switch Malfunction	□Short in park/neutral position switch circuit □Park/neutral position switch □ECM	●	○

DI02G–02

PARTS LOCATION

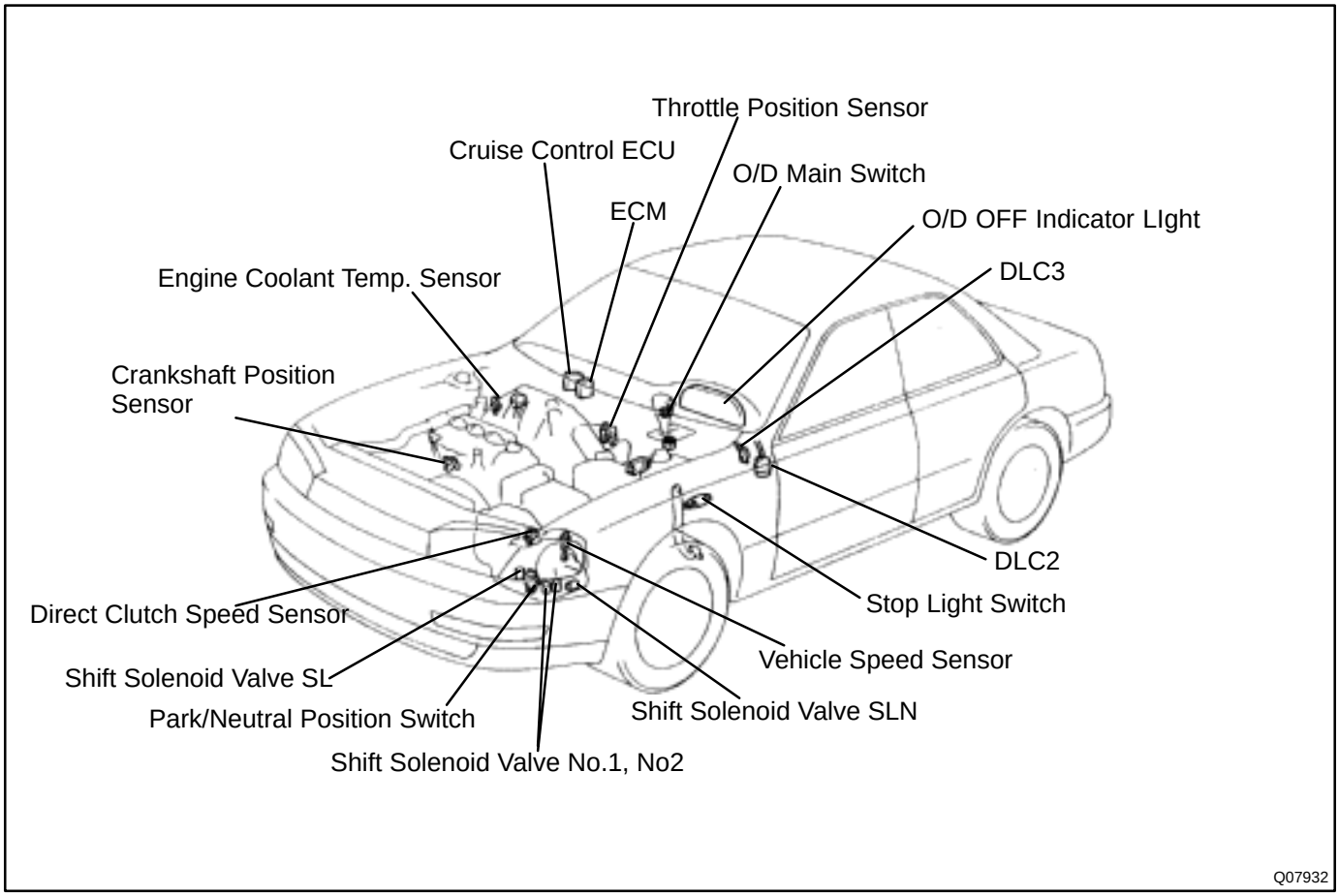

DI1KA–01

TERMINALS OF ECM

Except California, w/ Engine Immobilizer and / or TRAC:

ECM Terminals

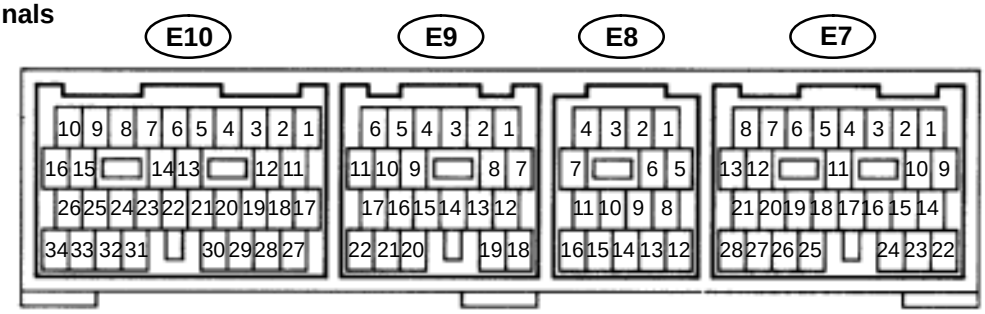

FI6810

Symbols (Terminals No.)	Wiring Color	Condition	STD Voltage (V)
S1 ↔ E1 (E10–11 ↔ E8–16)	V ↔ BR	IG ON	10 ~ 14
		1st or 2nd gear	10 ~ 14
		3rd or O/D gear	Below 1
S2 ↔ E1 (E10–17 ↔ E8–16)	L–B ↔ BR	IG ON	Below 1
		1st or 2nd gear	10 ~ 14
		3rd or O/D gear	Below 1
SL ↔ E1 (E10–27 ↔ E8–16)	P–L ↔ BR	IG ON	Below 1
		Vehicle driving under lock–up position	10 ~ 14
$NC2^{+}$ ↔ $NC2^{-}$ (E9–9 ↔ E9–4)	R ↔ G	Engine is running	Pulse signal is output Below 1 ↔ 4 ~ 5
SLN^{+} ↔ SLN^{-} (E10–2 ↔ E 8–2)	W–L ↔ B–Y	IG ON	10 ~ 14
OD1 ↔ E1 (E7–7 ↔ E8–16)	Y–B ↔ BR	IG ON	5 ~ 6
OD2 ↔ E1 (E7–6 ↔ E8–16)	G–O ↔ BR	O/D main switch ON	10 ~ 14
		O/D main switch OFF	Below 1
L ↔ E1 (E7–1 ↔ E8–16)	Y ↔ BR	IG ON and Shift lever L position	10 ~ 14
		IG ON and Shift lever other than L position	Below 1
2 ↔ E1 (E7–10 ↔ E8–16)	*1, *3 L–W ↔ BR *2, *4 O ↔ BR	IG ON and Shift lever 2 position	10 ~ 14
		IG ON and Shift lever other than 2 position	Below 1
R ↔ E1 (E7–15 ↔ E8–16)	R–B ↔ BR	IG ON and Shift lever R position	10 ~ 14
		IG ON and Shift lever other than R position	Below 1
NSW ↔ E1 (E10–14 ↔ E8–16)	B–W ↔ BR	IG ON and Shift lever P or N position	10 ~ 14
		IG ON and Shift lever other than P or N position	Below 1

*1: w/ Engine immobilizer system
*2: w/o Engine immobilizer system
*3 TMC made ex. USA w/ TRAC
*4: TMMK made, TMC made USA w/ TRAC

California, w/ Engine Immobilizer and / or TRAC:

ECM Terminals

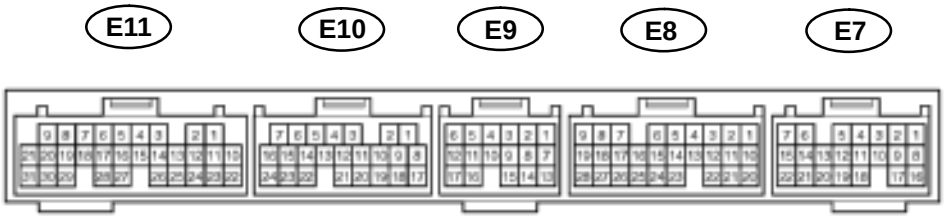

D01054

Symbols (Terminals No.)	Wiring Color	Condition	STD Voltage (V)
S1 ↔ E1 (E11–7 ↔ E10–17)	V ↔ BR	IG ON	10 ~ 14
		1st or 2nd gear	10 ~ 14
		3rd or O/D gear	Below 1
S2 ↔ E1 (E11–8 ↔ E10–17)	L–B ↔ BR	IG ON	Below 1
		1st or 2nd gear	10 ~ 14
		3rd or O/D gear	Below 1
SL ↔ E1 (E11–9 ↔ E10–17)	P–L ↔ BR	IG ON	Below 1
		Vehicle driving under lock–up position	10 ~ 14
$NC2^+$ ↔ $NC2^-$ (E11–14 ↔ E11–26)	R ↔ G	Engine is running	Pulse signal is output Below 1 ↔ 4 ~ 5
SLN^+ ↔ SLN^- (E11–20 ↔ E11–19)	W–L ↔ B–Y	IG ON	10 ~ 14
OD1 ↔ E1 (E8–24 ↔ E10–17)	Y–B ↔ BR	IG ON	5 ~ 6
OD2 ↔ E1 (E8–10 ↔ E10–17)	G–O ↔ BR	O/D main switch ON	10 ~ 14
		O/D main switch OFF	Below 1
L ↔ E1 (E8–12 ↔ E10–17)	Y ↔ BR	IG ON and Shift lever L position	10 ~ 14
		IG ON and Shift lever other than L position	Below 1
2 ↔ E1 (E8–3 ↔ E10–17)	*1, *3 L–W ↔ BR *2, *4 O ↔ BR	IG ON and Shift lever 2 position	10 ~ 14
		IG ON and Shift lever other than 2 position	Below 1
R ↔ E1 (E8–2 ↔ E10–17)	R–B ↔ BR	IG ON and Shift lever R position	10 ~ 14
		IG ON and Shift lever other than R position	Below 1
NSW ↔ E1 (E8–20 ↔ E10–17)	B–W ↔ BR	IG ON and Shift lever P or N position	10 ~ 14
		IG ON and Shift lever other than P or N position	Below 1

*1: w/ Engine immobilizer system
*2: w/o Engine immobilizer system
*3 TMC made ex. USA w/ TRAC
*4: TMMK made, TMC made USA w/ TRAC

DI02I–02

PROBLEM SYMPTOMS TABLE

If a normal code is displayed during the diagnostic trouble code check but the trouble still occurs, check the circuits for each symptom in the order given in the charts on the following pages and proceed to the page given for troubleshooting.

The Matrix Chart is divided into 3 chapters.

Chapter 1: Electronic Circuit Matrix Chart

Chapter 2: On–vehicle Repair Matrix Chart

Chapter 3: Off–vehicle repair Matrix Chart

- ☐ If the instruction ”Proceed to next circuit inspection shown on matrix chart” is given in the flow chart for each circuit, proceed to the circuit with the next highest number in the table to continue the check.
- ☐ If the trouble still occurs even though there are no abnormalities in any of the other circuits, then check and replace the ECM.

1. Chapter 1: Electronic Circuit Matrix Chart

Symptom	Suspect Area	See page
No up–shift (1st → 2nd)	ECM	IN–31
No up–shift (2nd → 3rd)	ECM	IN–31
No up–shift (3rd → O/D)	1. O/D main switch circuit 2. O/D cancel signal circuit 3. ECM	DI–487 DI–484 IN–31
No down–shift (O/D → 3rd)	ECM	IN–31
No down–shift (3rd → 2nd)	ECM	IN–31
No down–shift (2nd → 1st)	ECM	IN–31
No lock–up or No lock–up off	ECM	IN–31
Shift point too high or too low	ECM	IN–31
Up–shift to 2nd while in L position	ECM	IN–31
Up–shift to 3rd while in L position	ECM	IN–31
Up–shift to O/D from 3rd	1. O/D main switch circuit 2. ECM	DI–487 IN–31
Up–shift to O/D from 3rd while engine is cold	ECM	IN–31
Harsh engagement (N → D)	ECM	IN–31
Harsh engagement (Lock–up)	ECM	IN–31
Harsh engagement (Any driving position)	ECM	IN–31
Poor acceleration	ECM	IN–31
Large shift shock or engine stalls when starting off or stopping	ECM	IN–31

2. Chapter 2: On–Vehicle Repair (● : A541E AUTOMATIC TRANSAXLE Repair Manual Pub. No. RM530U)

Symptom	Suspect Area	See page
Vehicle does not move in any forward position and reverse position	1. Manual valve 2. Throttle valve 3. Primary regulator valve 4. Off–vehicle repair matrix chart	● ● ● DI–453
Vehicle does not move in R position	Off–vehicle repair matrix chart	DI–453
No up–shift (1st → 2nd)	1. 1–2 shift valve 2. Off–vehicle repair matrix chart	● DI–453
No up–shift (2nd → 3rd)	1. 2–3 shift valve 2. Off–vehicle repair matrix chart	● DI–453
No up–shift (3rd → O/D)	1. 3–4 shift valve 2. Off–vehicle repair matrix chart	● DI–453
No down–shift (O/D → 3rd)	3–4 shift valve	●
No down–shift (3rd → 2nd)	2–3 shift valve	●
No down–shift (2nd → 1st)	1–2 shift valve	●
No lock–up or No lock–up off	1. Lock–up relay valve 2. Off–vehicle repair matrix chart	● DI–453
Harsh engagement (N → D)	1. C_1 accumulator 2. Off–vehicle repair matrix chart	● DI–453
Harsh engagement (N → R)	1. C_2 accumulator 2. No.1 accumulator control valve 3. Off–vehicle repair matrix chart	● ● DI–453
Harsh engagement (N → L)	Low coast modulator valve	●
Harsh engagement (Lock–up)	1. Lock–up relay valve 2. Off–vehicle repair matrix chart	● DI–453
Harsh engagement (1st → 2nd → 3rd → O/D)	1. Throttle modulator valve 2. Cut back valve 3. Throttle valve	● ● ●
Harsh engagement (2nd → 3rd)	C_2 accumulator	●
Harsh engagement (3rd → O/D)	B_0 accumulator	●
Harsh engagement (O/D → 3rd)	1. C_0 accumulator 2. B_0 accumulator	● ●
Slip or shudder (Forward and reverse)	1. Throttle valve 2. Oil strainer 3. Off–vehicle repair matrix chart	● ● DI–453
No engine braking (1st: L position)	1. Low coast modulator valve 2. Off–vehicle repair matrix chart	● DI–453
No engine braking (2nd: 2 position)	1. 2nd coast modulator valve 2. Off–vehicle repair matrix chart	● DI–453
No kick–down	1. 1–2 shift valve 2. 2–3 shift valve 3. 3–4 shift valve	● ● ●

3. Chapter 3: Off–Vehicle Repair (● : A541E AUTOMATIC TRANSAXLE Repair Manual Pub. No. RM530U)

Symptom	Suspect Area	See page
Vehicle does not move in any forward position and reverse position	1. Front and rear planetary gear 2. O/D planetary gear 3. O/D one–way clutch (F_0) 4. O/D direct clutch (C_0) 5. Forward clutch (C_1) 6. O/D brake (B_0)	● ● ● ● ● ●
Vehicle does not move in R position	1. Front and rear planetary gear unit 2. Direct clutch (C_2) 3. O/D direct clutch (C_0) 4. 1st and reverse brake (B_3)	● ● ● ●
No up–shift (1st → 2nd)	1. No. 1 one–way clutch (F_1) 2. 2nd brake (B_2)	● ●
No up–shift (2nd → 3rd)	Direct clutch (C_2)	●
No up–shift (3rd → O/D)	O/D brake (B_0)	●
No lock–up or No lock–up off	Torque converter clutch	●
Harsh engagement (N → D)	1. Forward clutch (C_1) 2. O/D one–way clutch (F_0) 3. No. 2 one–way clutch (F_2)	● ● ●
Harsh engagement (N → R)	1. Direct clutch (C_2) 2. 1st and reverse brake (B_3)	● ●
Harsh engagement (Lock–up)	Torque converter clutch	●
Slip or shudder (Forward position: After warm–up)	1. Torque converter clutch 2. O/D direct clutch (C_0) 3. Forward clutch (C_1) 4. O/D one–way clutch (F_0)	● ● ● ●
Slip or shudder (R position)	1. Direct clutch (C_2) 2. 1st and reverse brake (B_3) 3. O/D direct clutch (C_0)	● ● ●
Slip or shudder (1st)	No. 2 one–way clutch (F_2)	●
Slip or shudder (2nd)	1. No. 1 one–way clutch (F_1) 2. 2nd brake (B_2)	● ●
Slip or shudder (3rd)	Direct clutch (C_2)	●
Slip or shudder (O/D)	O/D brake (B_0)	●
No engine braking (1st ~ 3rd: D position)	2nd brake (B_2)	●
No engine braking (1st: L position)	1st and reverse brake (B_3)	●
No engine braking (2nd: 2 position)	2nd coast brake (B_1)	●
Poor acceleration (All position)	1. Torque converter clutch 2. O/D planetary gear	● ●
Poor acceleration (O/D)	1. O/D direct clutch (C_0) 2. O/D planetary gear	● ●
Large shift shock or engine stalls when starting off or stopping	Torque converter clutch	●

DI1KB–01

CIRCUIT INSPECTION

DTC	P0500	Vehicle Speed Sensor Malfunction

CIRCUIT DESCRIPTION

The vehicle speed sensor outputs a 4–pulse signal for every revolution of the rotor shaft, which is rotated by the transmission output shaft via the driven gear. After this signal is converted into a more precise rectangular waveform by the waveform shaping circuit inside the combination meter, it is then transmitted to the ECM. The ECM determines the vehicle speed based on the frequency of these pulse signals.

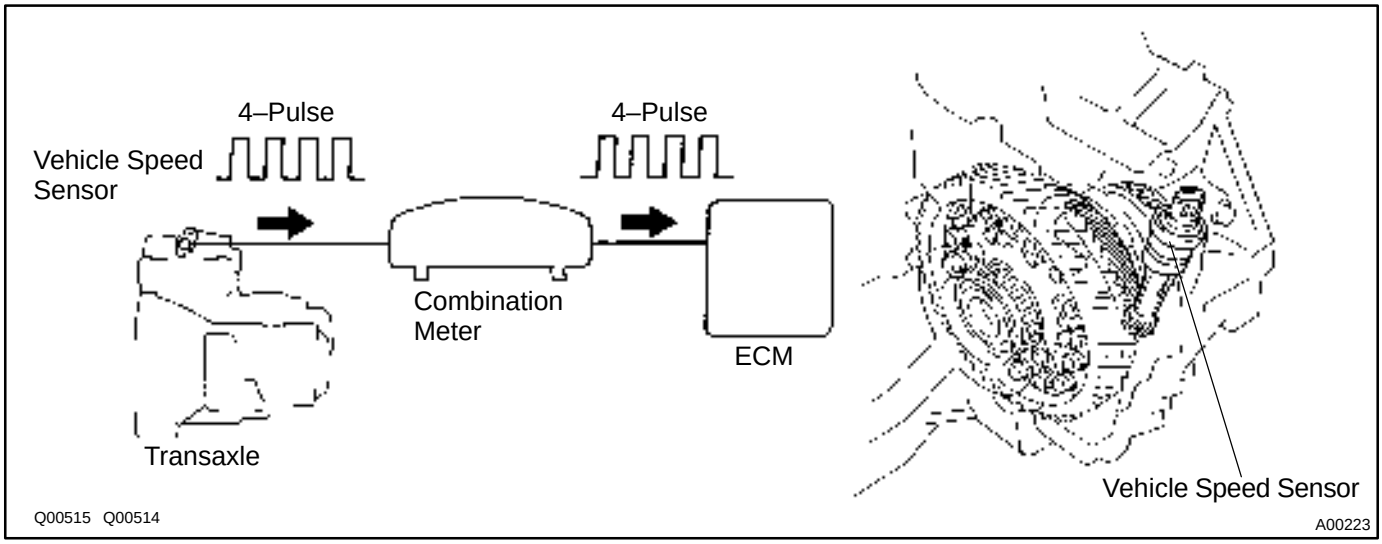

DTC No.	DTC Detecting Condition	Trouble Area
P0500	No vehicle speed sensor signal to ECM under conditions (a) and (b) (2 trip detection logic) (a) Park/neutral position switch is OFF (b) Vehicle is being driven	●Open or short in vehicle speed sensor circuit ●Vehicle speed sensor ●Combination meter ●ECM ●Automatic transaxle (clutch, brake or gear etc.)
	Clutch or brake slips or gear is broken	

WIRING DIAGRAM

See page DI–333.

INSPECTION PROCEDURE

1	**Check operation of speedometer.**

CHECK:

Drive the vehicle and check if the operation of the speedometer in the combination meter is normal.

HINT:

The vehicle speed sensor is operating normally if the speedometer display is normal.

NG → **Check speedometer circuit.**

OK

2	**Check for short in harness and connector between terminal SPD of ECM and body ground.**

Except California, w/ Engine Immobilizer and / or TRAC:

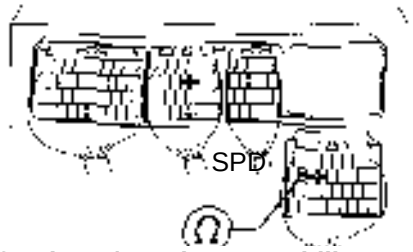

California, w/ Engine Immobilizer and / or TRAC:

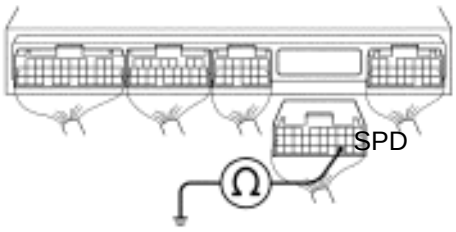

P23875
A02373
A02155

PREPARATION:

(a) Remove the glove compartment (See page SF–73).

(b) Disconnect the connector from ECM.

CHECK:

Check continuity between terminal SPD of ECM and body ground.

OK:

No continuity (1 M Ω or higher)

NG → **Repair or replace harness or connector.**

OK

3	**Check voltage between terminal SPD of ECM connector and body ground.**

ON

Except California, w/ Engine Immobilizer and / or TRAC:

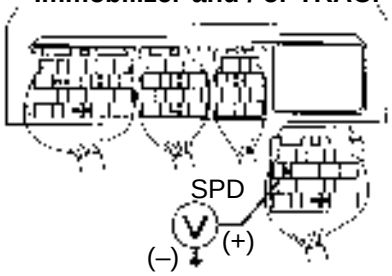

California, w/ Engine Immobilizer and / or TRAC:

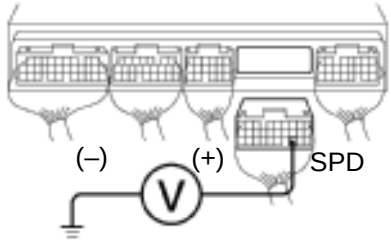

BE66
P238
D01908

D02281

PREPARATION:

Turn ignition switch ON.

CHECK:

Measure voltage between terminal SPD of ECM connector and body ground.

OK:

Voltage: 9 ~ 14 V

NG → **Check for open in harness and connector between junction connector (J15) and ECM (See page IN–31).**

OK

4	**Check for open in harness and connector between junction connector (J15) and combination meter (See page IN–31).**

NG → **Repair or replace harness or connector.**

OK

5	Check ECM (See page IN–31).

NG → Replace ECM.

OK →

Check and repair the transaxle (clutch, brake or gear etc.).

DTC	P0750, P0755	Shift Solenoid A/B Malfunction (Shift Solenoid Valve No.1/No.2)

SYSTEM DESCRIPTION

The ECM uses signals from the vehicle speed sensor and direct clutch speed sensor to detect the actual gear position (1st, 2nd, 3rd or O/D gear).
Then the ECM compares the actual gear with the shift schedule in the ECM memory to detect mechanical trouble of the shift solenoid valves, valve body or automatic transaxle (clutch, brake or gear etc.)

DTC No.	DTC Detecting Condition	Trouble Area
P0750 P0755	During normal driving, the gear required by the ECM does not match the actual gear (2 trip detection logic)	●Shift solenoid valve No.1/No.2 is stuck open or closed ●Valve body is blocked up or stuck ●Automatic transaxle (clutch, brake or gear etc.)

Check the shift solenoid valve No.1 when DTC P0750 is output and check the shift solenoid valve No.2 when DTC P0755 is output.

INSPECTION PROCEDURE

1	Check shift solenoid valve No.1 or No.2 operation.

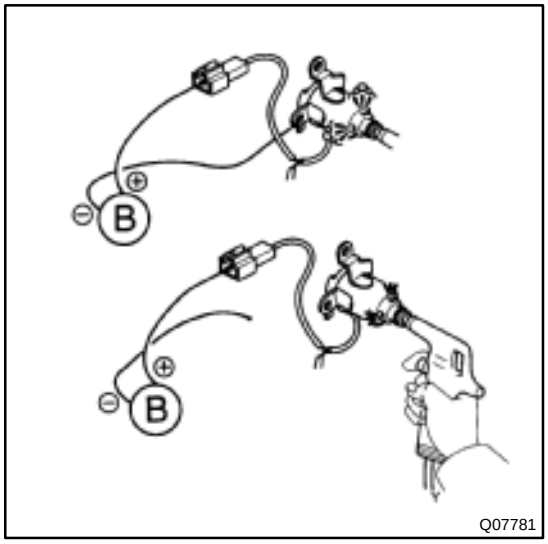

PREPARATION:
(a) Remove the oil pan.
(b) Remove the shift solenoid valve No.1 or No.2.

CHECK:
(a) Applying 490 kPa (5 kgf/cm^2, 71 psi) of compressed air, check that the solenoid valve does not leak air.
(b) When battery positive voltage is supplied to the shift solenoid valve, check that the valve opens.

NG → **Replace the shift solenoid valve No.1 or No.2.**

OK

Check the valve body (See page DI–453).

NG → **Repair or replace the valve body.**

OK

Repair the transaxle.

DTC	P0753, P0758	Shift Solenoid A/B Electrical Malfunction (Shift Solenoid Valve No.1/No.2)

CIRCUIT DESCRIPTION

Shifting from 1st to O/D is performed in combination with ON and OFF of the shift solenoid valves No.1 and No.2 controlled by ECM. If an open or short circuit occurs in either of the shift solenoid valves, the ECM controls the remaining normal shift solenoid valve to allow the vehicle to be operated smoothly (Fail safe function).

Fail Safe Function:

If either of the shift solenoid valve circuits develops an open or short, the ECM turns the other shift solenoid ON and OFF to shift to the gear positions shown in the table below. The ECM also turns the shift solenoid valve SL OFF at the same time. If both solenoids are malfunction, hydraulic control cannot be performed electronically and must be done manually.

Manual shifting as shown in the following table must be done (In the case of a short circuit, the ECM stops sending current to the short circuited solenoid).

Position	NORMAL			SHIFT SOLENOID NO.1 MALFUNCTIONING			SHIFT SOLENOID NO.2 MALFUNCTIONING			BOTH SOLENOIDS MALFUNCTIONING
	Solenoid valve		Gear	Solenoid valve		Gear	Solenoid valve		Gear	Gear when shift selector is manually operated
	No.1	No.2		No.1	No.2		No.1	No.2		
D	ON	OFF	1st	X	ON	3rd	ON	X	1st	O/D
	ON	ON	2nd	X	ON	3rd	OFF	X	O/D	O/D
	OFF	ON	3rd	X	ON	3rd	OFF	X	O/D	O/D
	OFF	OFF	O/D	X	OFF	O/D	OFF	X	O/D	O/D
2	ON	OFF	1st	X	ON	3rd	ON	X	1st	O/D
	ON	ON	2nd	X	ON	3rd	OFF	X	O/D	O/D
	OFF	ON	3rd	X	ON	3rd	OFF	X	O/D	O/D
L	ON	OFF	1st	X	OFF	1st	ON	X	1st	1st
	ON	ON	2nd	X	ON	2nd	ON	X	1st	1st

X: Malfunctions

Check the shift solenoid valve No.1 when DTC P0753 is output and check the shift solenoid valve No.2 when DTC P0758 is output.

DTC No.	DTC Detecting Condition	Trouble Area
P0753 P0758	The ECM checks for an open or short circuit in the shift solenoid valves No.1 and No.2 circuit when it changes. The ECM records DTC P0753 or P0758 if condition (a) or (b) is detected once, but it does not light up MIL. After ECM detects condition (a) or (b) continuously 8 times or more in a trip and the MIL light up. (a) When the solenoid is energized, the solenoid resistance is 8 Ω or less and is counted. (b) When the solenoid is not energized, the solenoid resistance is 100 kΩ or more and is counted.	●Open or short in shift solenoid valve No.1/No.2 circuit ●Shift solenoid valve No.1/No.2 ●ECM

WIRING DIAGRAM

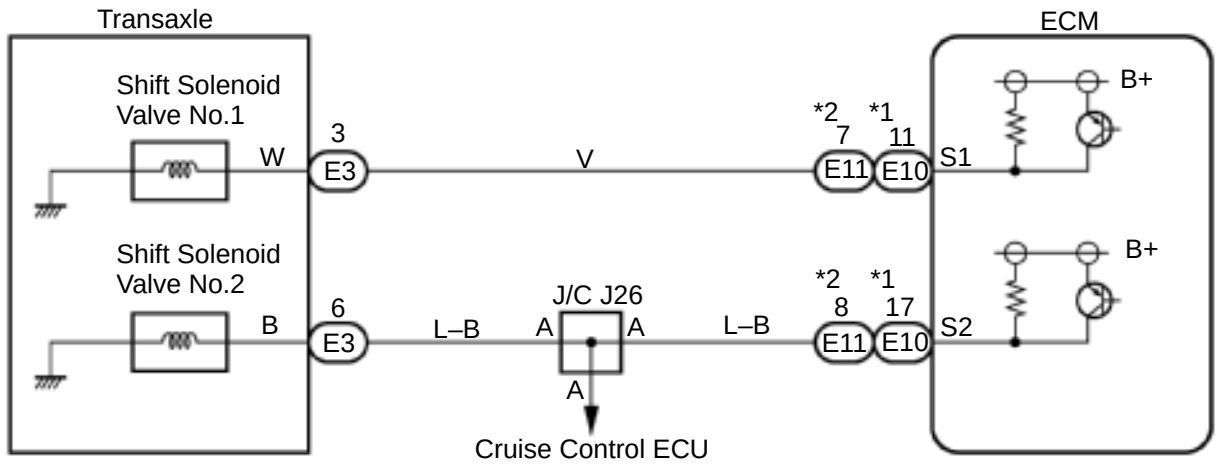

*1: Except California, w/ Engine Immobilizer and / or TRAC
*2: California, w/ Engine Immobilizer and / or TRAC

D01092

INSPECTION PROCEDURE

1	**Measure resistance between terminal S1 or S2 of ECM and body ground.**

Except California, w/ Engine Immobilizer and / or TRAC:

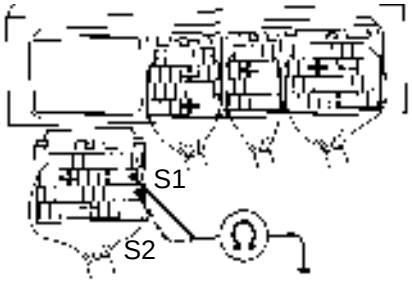

California, w/ Engine Immobilizer and / or TRAC:

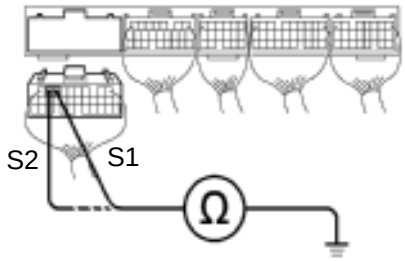

Q076
D00833

D01909

PREPARATION:

Disconnect the connector from ECM.

CHECK:

Measure resistance between terminal S1 or S2 of ECM and body ground.

OK:

Resistance: 11 ~ 15 Ω

OK	Check and replace the ECM.

NG

2	Check harness and connector between ECM and automatic transaxle solenoid connector.

Except California, w/ Engine Immobilizer and / or TRAC:

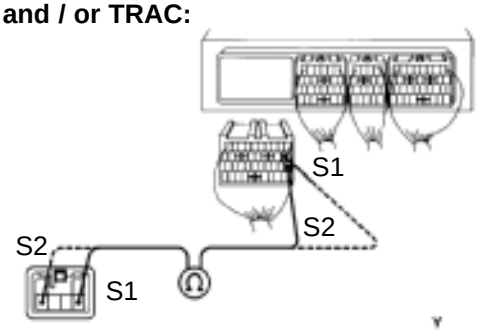

California, w/ Engine Immobilizer and / or TRAC:

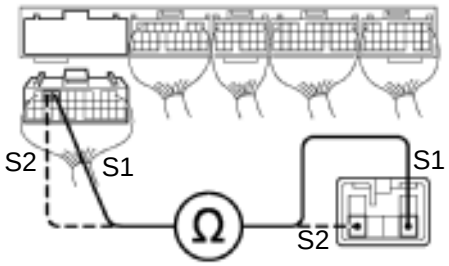

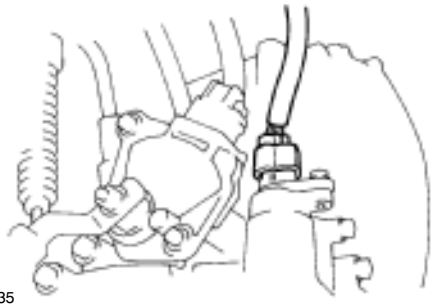

Q07935
D00832
Q02283
D01910

PREPARATION:

Disconnect the solenoid connector from the automatic transaxle.

CHECK:

Check the harness and connector between terminal S1 or S2 of ECM and terminal S1 or S2 of solenoid connector.

OK:

There is no open and no short circuit.

NG	Repair or replace the harness or connector.

OK

3	Check shift solenoid valve No.1 or No.2.

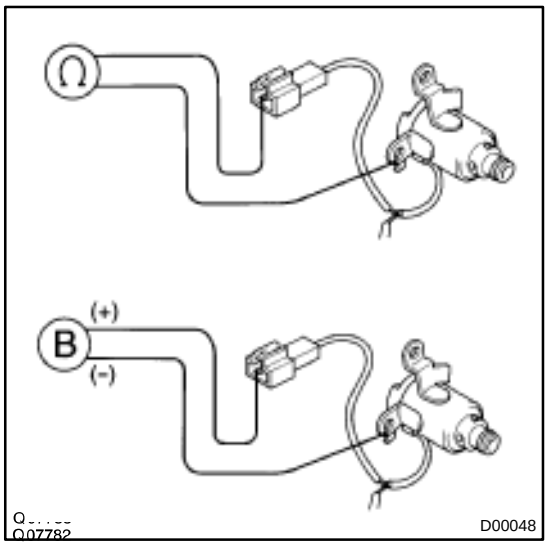

PREPARATION:

(a) Jack up the vehicle.
(b) Remove the oil pan.
(c) Disconnect the solenoid connector.
(d) Remove the shift solenoid valve No.1 or No.2.

CHECK:

(a) Measure resistance between solenoid connector and body ground.
(b) Connect the positive ~ lead to terminal of solenoid connector, negative > lead to solenoid body.

OK:

(a) Resistance: 11 ~ 15 Ω
(b) The solenoid makes an operating noise.

NG → **Replace the solenoid valve.**

OK

Repair or replace the solenoid wire.

DTC	P0770	Shift Solenoid E Malfunction (Shift Solenoid Valve SL)

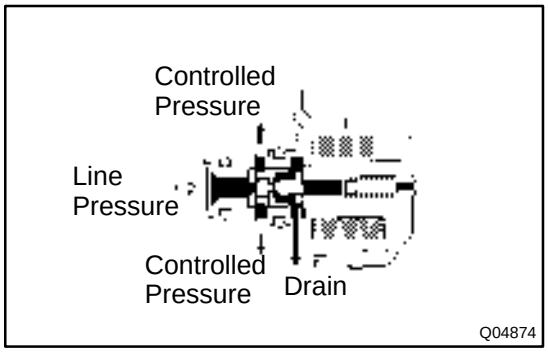

SYSTEM DESCRIPTION

The ECM uses the signals from the throttle position sensor, air–flow meter and crankshaft position sensor to monitor the engagement condition of the lock–up clutch.
Then the ECM compares the engagement condition of the lock–up clutch with the lock–up schedule in the ECM memory to detect mechanical trouble of the shift solenoid valve SL, valve body, torque converter clutch or automatic transaxle (clutch, brake or gear etc.).

DTC No.	DTC Detecting Condition	Trouble Area
P0770	●Lock–up does not occur when driving in the lock–up range (normal driving at 80 km/h [50 mph]), or lock–up remains ON in the lock–up OFF range. (2 trip detection logic) ●When lock–up is ON, clutch or brake slips or gear is broken.	●Shift solenoid valve SL is stuck open or closed ●Valve body blocked up or stuck ●Lock–up clutch ●Automatic transaxle (clutch, brake or gear etc.)

INSPECTION PROCEDURE

1	Check solenoid valve SL operation.

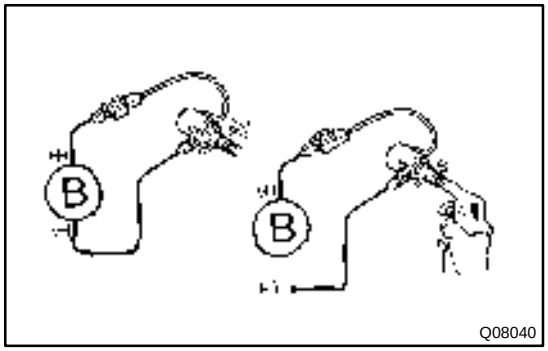

PREPARATION:
(a) Remove the oil pan.
(b) Remove the shift solenoid valve SL.

CHECK:
(a) Applying 490 kPa (5 kgf/cm^2, 71 psi) of compressed air, check that the solenoid valve does not leak air.
(b) When battery positive voltage is supplied to the shift solenoid valve, check that the solenoid valve opens.

NG → **Replace the solenoid valve SL.**

OK

2	Check valve body (See page DI–453).

NG → Repair or replace the valve body.

OK

Check the torque converter clutch (See page AX–21).

NG → Replace the torque converter clutch.

OK

Repair the transaxle.

DTC	P0773	Shift Solenoid E Electrical Malfunction (Shift Solenoid Valve SL)

CIRCUIT DESCRIPTION

The shift solenoid valve SL is turned ON and OFF by signals from the ECM to control the hydraulic pressure acting on the lock–up relay valve, which then controls operation of the lock–up clutch.

Fail safe function

If the ECM detects a malfunction, it turns the shift solenoid valve SL OFF.

DTC No.	DTC Detecting Condition	Trouble Area
P0773	Either (a) or (b) are detected for 1 time. (2 trip detection logic) (a) Solenoid resistance is 8 Ω or less short circuit when solenoid is energized. (b) Solenoid resistance is 100 kΩ or more open circuit when solenoid is not energized.	●Open or short in shift solenoid valve SL circuit ●Shift solenoid valve SL ●ECM

WIRING DIAGRAM

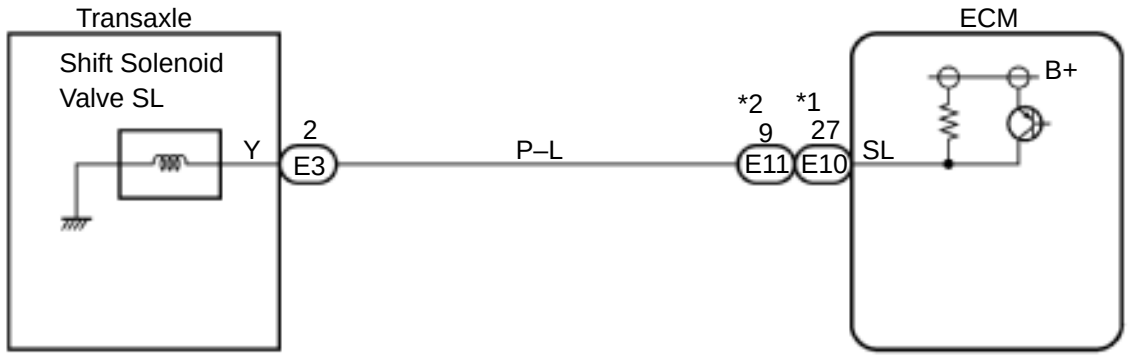

*1: Except California, w/ Engine Immobilizer and / or TRAC
*2: California, w/ Engine Immobilizer and / or TRAC

D01093

INSPECTION PROCEDURE

1	**Measure resistance between terminal SL of ECM and body ground.**

Except California, w/ Engine Immobilizer and / or TRAC:

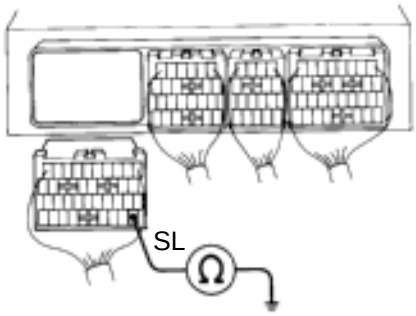

California, w/ Engine Immobilizer and / or TRAC:

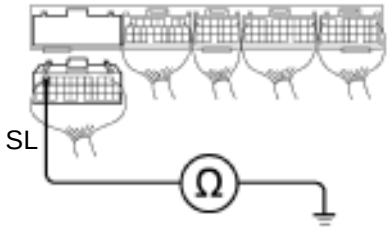

Q076
D00839
D01911

PREPARATION:

Disconnect the connector from ECM.

CHECK:

Measure resistance between terminal SL of ECM and body ground.

OK:

Resistance: 8 ~ 100,000 Ω

OK → **Check and replace the ECM.**

NG

2	**Check harness and connector between ECM and automatic transaxle solenoid connector (See page IN–31).**

Except California, w/ Engine Immobilizer and / or TRAC:

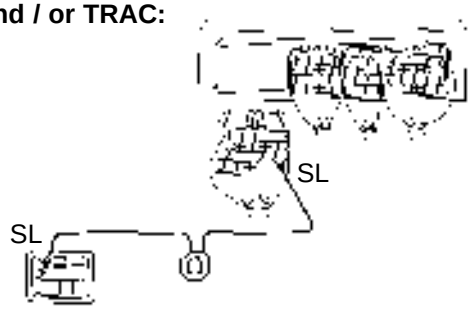

California, w/ Engine Immobilizer and / or TRAC:

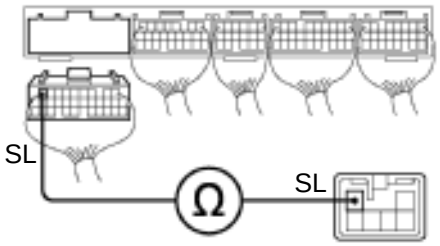

D00840 D01912

PREPARATION:

Disconnect the solenoid connector from the transaxle.

CHECK:

Check the harness and connector between terminal SL of ECM and terminal SL of solenoid connector.

OK:

There is no open or short circuit.

NG → **Repair or replace the harness or connector.**

OK

3	Check shift solenoid valve SL.

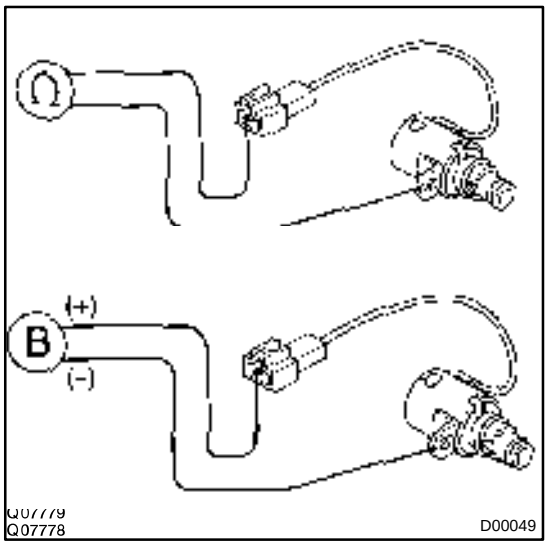

PREPARATION:

(a) Jack up the vehicle.
(b) Remove the oil pan.
(c) Disconnect the shift solenoid valve SL connector.
(d) Remove the shift solenoid valve SL.

CHECK:

(a) Measure resistance between terminal SL of shift solenoid valve and solenoid body.
(b) Connect positive ⊕ lead to terminal of solenoid connector, negative ⊖ lead to solenoid body.

OK:

(a) Resistance: 11 ~ 15 Ω
(b) The shift solenoid valve SL makes operation noise.

NG → **Replace the shift solenoid valve SL.**

OK

Check and replace or repair the solenoid wire.

DI02O–02

DTC	P1520	Stop Light Switch Signal Malfunction

CIRCUIT DESCRIPTION

The purpose of this circuit is to prevent the engine from stalling, while driving in lock–up condition, when brakes are suddenly applied.
When the brake pedal is operated, this switch sends a signals to ECM. Then the ECM cancels operation of the lock–up clutch while braking is in progress.

DTC No.	DTC Detecting Condition	Trouble Area
P1520	No stop light switch signal to ECM during driving. (2 trip detection logic)	●Open or short in stop light switch circuit ●Stop light switch ●ECM

WIRING DIAGRAM

See page DI–363.

INSPECTION PROCEDURE

See page DI–363.

DTC	P1705	NC2 Revolution Sensor Circuit Malfunction (Direct Clutch Speed Sensor)

CIRCUIT DESCRIPTION

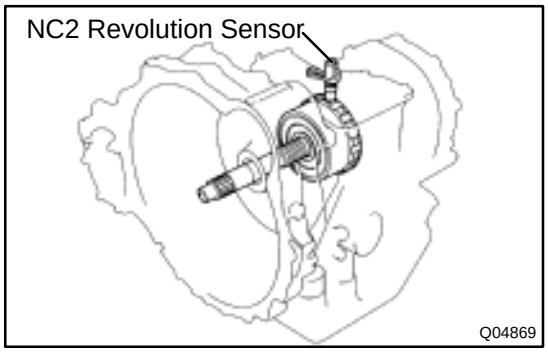

This sensor detects the rotation speed of the direct clutch drum. By comparing the direct clutch speed signal and the vehicle speed sensor signal, the ECM detects the shift timing of the gears and appropriately controls the engine torque and hydraulic pressure in response to various conditions, thus performing smooth gear shifting.

DTC No.	DTC Detecting Condition	Trouble Area
P1705	The ECM detects conditions (a), (b), (c), (d), (e) and (f) continuity for 4 sec or more. (2 trip detection logic) (a) Vehicle speed : 32 km/h (20 mph) or more (b) 3rd or 4th gear (c) NC2 < 300 rpm (d) Park/neutral position switch: OFF (e) Solenoid valves and vehicle speed sensor are normal (f) L position: OFF	●Open or short in direct clutch speed sensor circuit ●Direct clutch speed sensor ●ECM

WIRING DIAGRAM

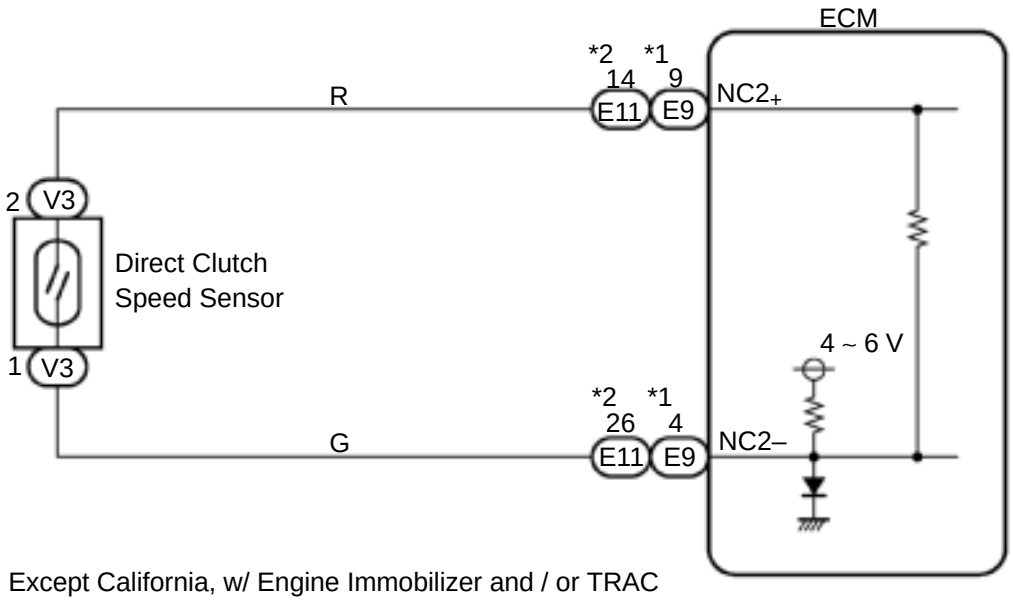

*1: Except California, w/ Engine Immobilizer and / or TRAC
*2: California, w/ Engine Immobilizer and / or TRAC

D01094

INSPECTION PROCEDURE

1	**Check resistance between terminals NC2+ and NC2– of ECM.**

Except California, w/ Engine Immobilizer and / or TRAC:

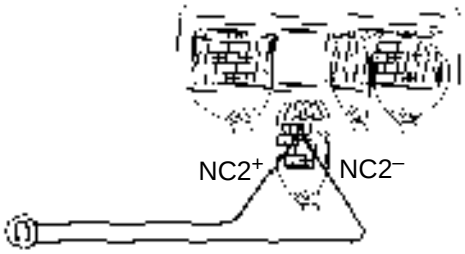

California, w/ Engine Immobilizer and / or TRAC:

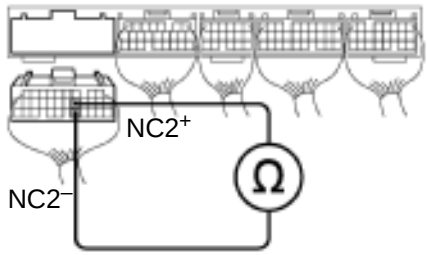

D00834 D01913

PREPARATION:

Disconnect the connector from ECM.

CHECK:

Check resistance between terminals NC2+ and NC2– of ECM.

OK:

Resistance: 560 ~ 680 Ω

OK → **Check and replace the ECM.**

NG

2	Check No.2 vehicle speed sensor.

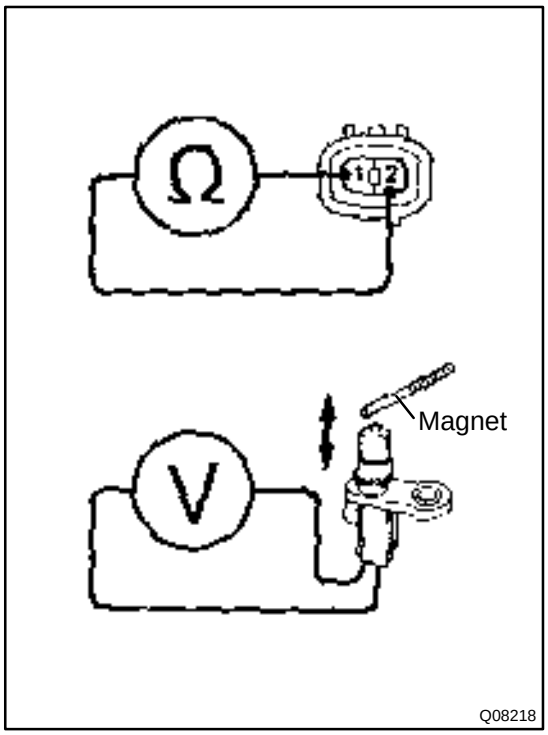

PREPARATION:

Remove the Direct clutch speed sensor from transaxle.

CHECK:

(a) Measure resistance between terminals 1 and 2 of speed sensor.

(b) Check voltage between terminals 1 and 2 of the speed sensor when a magnet is put close to the front end of the speed sensor then taken away quickly.

OK:

(a) Resistance: 560 ~ 680 Ω

(b) Voltage is generated intermittently.

HINT:

The voltage generated is extremely low.

NG → **Replace the Direct clutch speed sensor.**

OK →

Check and repair the harness and connector between ECM and Direct clutch speed sensor (See page IN–31).

DTC	P1765	Linear Solenoid for Accumulator Pressure Control Circuit Malfunction (Shift Solenoid Valve SLN)

CIRCUIT DESCRIPTION

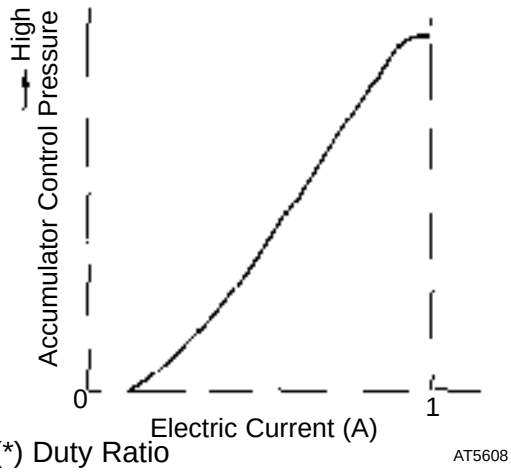

AT5608

The shift solenoid valve SLN controls the hydraulic pressure acting on the accumulator control valve when gears are shifted and performs smooth gear shifting.
The ECM determines optimum operating pressure according to the signals from the throttle position sensor, vehicle speed sensor and direct clutch speed sensor and controls the volume of current flow to the solenoid valve.
The amount of current to the solenoid is controlled by the (*) duty ratio of ECM output signals, causing a momentary change to the hydraulic pressure acting on the clutches during gear shifting.
When the duty ratio is high, the hydraulic pressure acting on the clutches is low.

(*) Duty Ratio
The duty ratio is the ratio of the period of continuity in one cycle.
For example, if A is the period of continuity in one cycle, and B is the period of non–continuity, then

$$\text{Duty Ratio} = \frac{A}{A+B} \times 100\ (\%)$$

D00061 BE4056

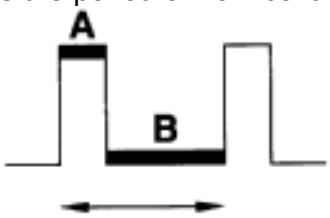

D00060

DTC No.	DTC Detecting Condition	Trouble Area
P1765	After the engine is warmed up, the current flow to the shift solenoid valve SLN for 1 sec or more under condition (a) or (b): (a) Engine speed: 500 rpm or more (b) Park/neutral position switch: ON (P or N position)	●Open or short in shift solenoid valve SLN circuit ●Shift solenoid valve SLN ●ECM

Reference

Waveform between terminals SLN^+ and SLN^- when engine is idling.

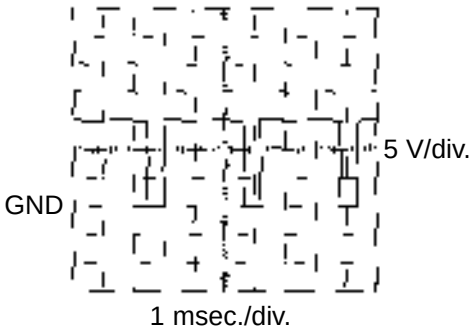

Waveform between terminals SLN^+ and SLN^- when during shift change.

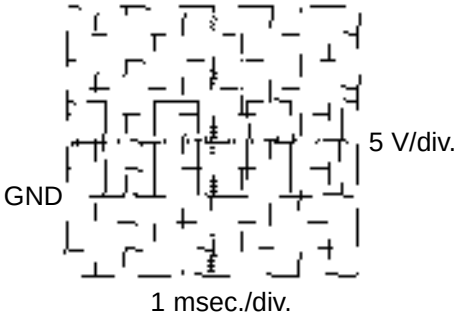

AT8764 AT8766

D00062

WIRING DIAGRAM

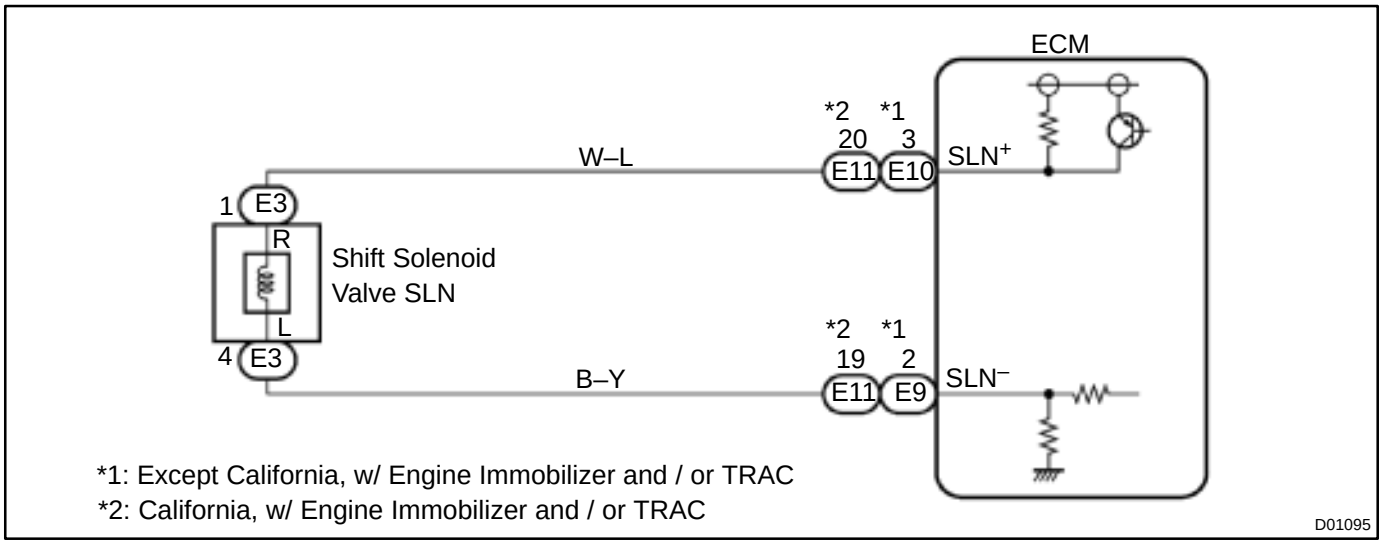

INSPECTION PROCEDURE

1	**Check shift solenoid valve SLN.**

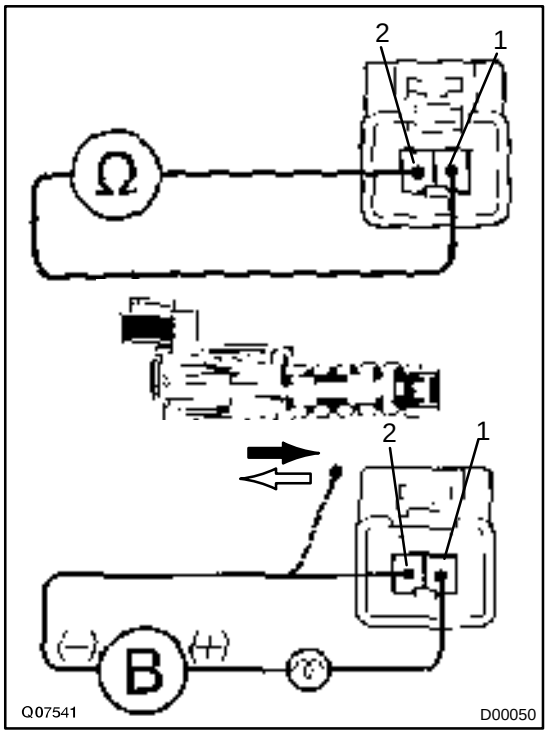

PREPARATION:

Disconnect the shift solenoid valve SLN connector.

CHECK:

(a) Measure resistance between terminals 1 and 2 of solenoid connector.

(b) Connect positive ⊕ lead with an 8 ~10 W bulb to terminal 1 of solenoid connector and negative ⊖ lead to terminal 2, then check the movement of the valve.

OK:

(a) Resistance: 5.1 ~ 5.5 Ω

(b)

When battery positive voltage is applied.	Valve move in direction in illustration. (on the left)
When battery positive voltage is cut off.	Valve move in direction in illustration. (on the right)

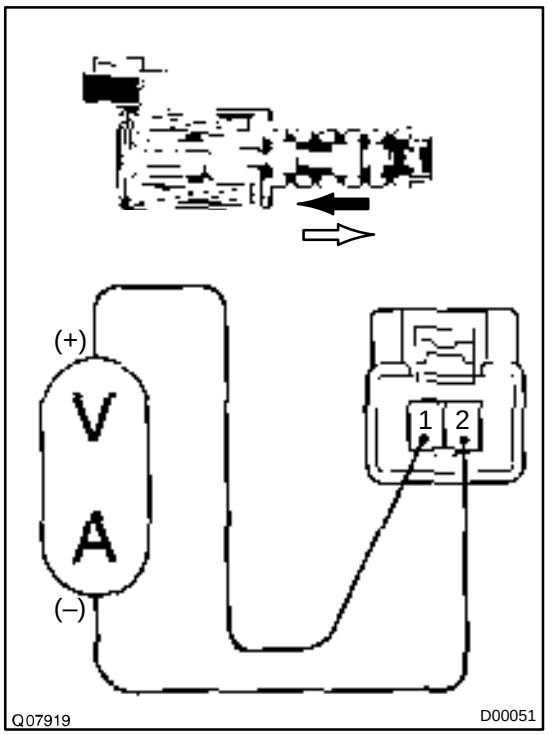

Reference

PREPARATION:

Connect positive ⊕ lead of the variable power supply to terminal 1 of solenoid connector and negative ⊖ lead to terminal 2.

CHECK:

(a) Check the movement of the valve when the voltage is gradually increased.
(A current greater than 1A should not be supplied.)

(b) Check the movement of the valve when the voltage is cut off.

OK:

(a) As the voltage is increased, the valve should move slowly in the ⇐ direction.
(b) The valve should return in the ⇨ direction.

NG	**Replace the shift solenoid valve SLN.**

OK

2	**Check harness and connector between battery and shift solenoid valve SLN, shift solenoid valve SLN and ECM (See page IN–31).**

NG	**Repair or replace the harness or connector.**

OK

Check and replace the ECM.

DI1KC–01

DTC	P1780	Park/Neutral Position Switch Malfunction

CIRCUIT DESCRIPTION

The park/neutral position switch detects the shift lever position and sends signals to the ECM.
The ECM receives signals (NSW, R, 2 and L) from the park/neutral position switch. When the signal is not sent to the ECM from the park/neutral position switch, the ECM judges that the shift lever is in D position.

DTC No.	DTC Detection Condition	Trouble Area
P1780	When driving under conditions (a) and (b) for 30 seconds or more, the park/neutral position switch is ON (N position). (2 trip detection logic) (a) Vehicle speed: 70 km/h (44 mph) or more (b) Engine speed: 1,500 ~ 2,500 rpm	●Short in park/neutral position switch circuit ●Park/neutral position switch ●ECM

WIRING DIAGRAM

Except California, w/ Engine Immobilizer and / or TRAC:

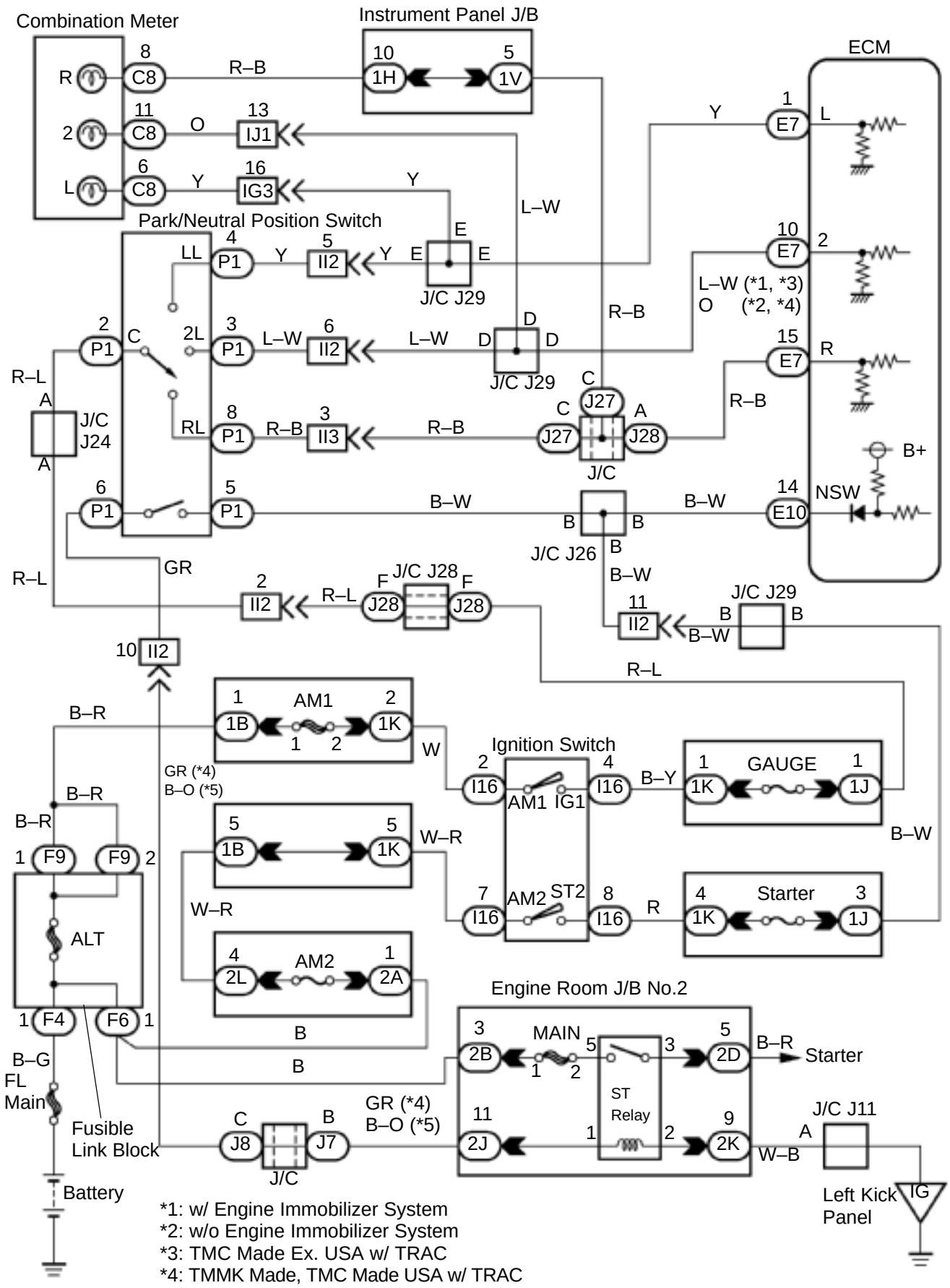

California, w/ Engine Immobilizer and / or TRAC:

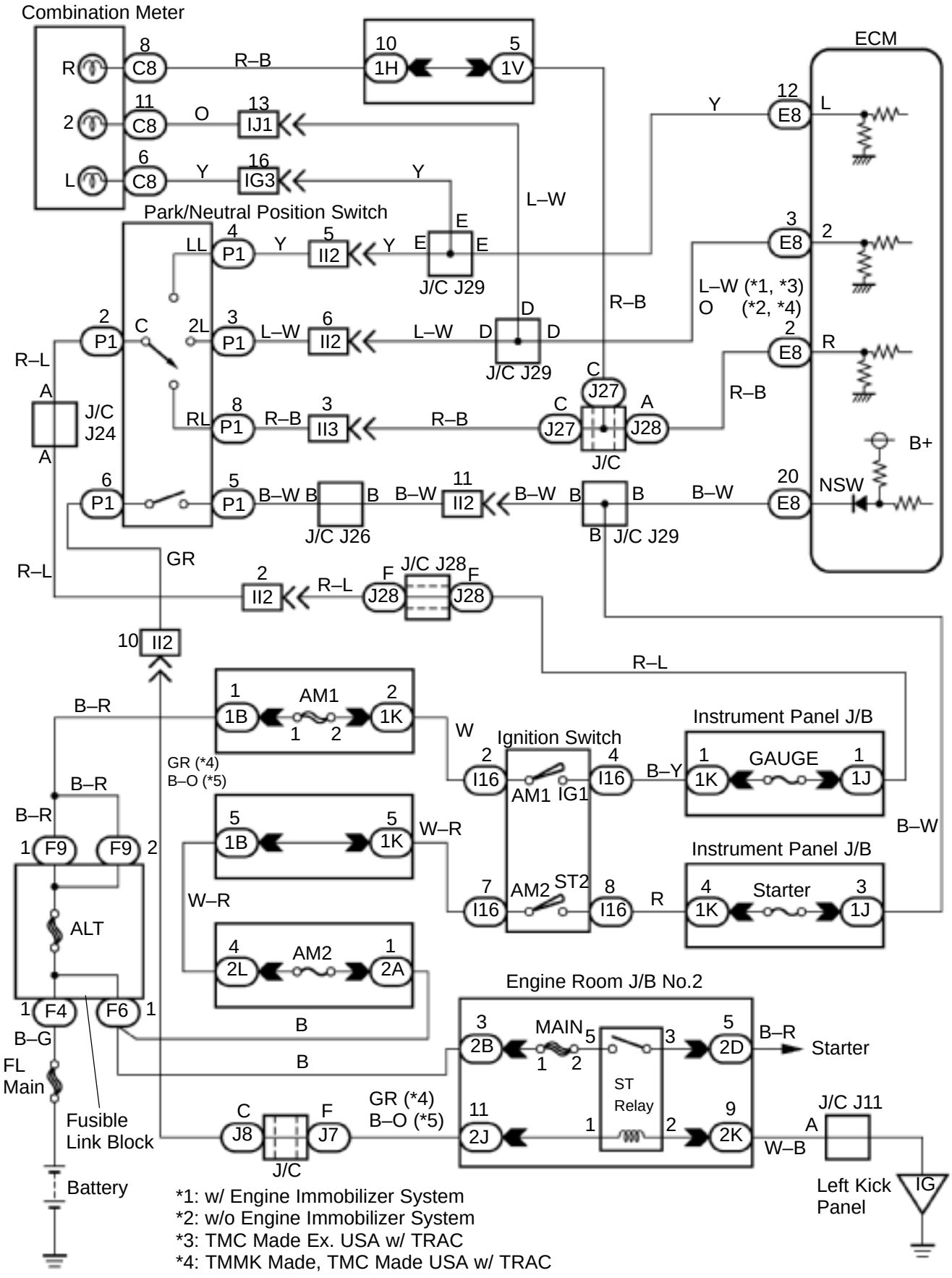

INSPECTION PROCEDURE

1	**Read PNP, REVERSE, 2ND and LOW signals.**

When using TOYOTA hand–held tester.

PREPARATION:

(a) Remove the DLC3 cover.
(b) Connect a TOYOTA hand–held tester to the DLC3.
(c) Turn the ignition switch ON and TOYOTA hand–held tester main switch ON.

CHECK:

Shift lever into the P, R, N, 2 and L positions, and read the PNP, REVERSE, 2ND and LOW signals on the TOYOTA hand–held tester.

OK:

Shift position	Signal
2	2ND OFF → ON
L	LOW OFF → ON
R	REVERSE OFF → ON
P, N	NSW OFF → ON

When not using TOYOTA hand–held tester.

PREPARATION:

Turn the ignition switch ON.

CHECK:

Measure voltage between terminals NSW, 2, L and R of ECM and body ground when the shift lever is shifted to the following positions.

OK:

Position	NSW–Body ground	R–Body ground	2–Body ground	L–Body ground
P, N	0 V	0 V	0 V	0 V
R	9 ~ 14 V*	9 ~ 14 V*	0 V	0 V
D	9 ~ 14 V	0 V	0 V	0 V
2	9 ~ 14 V	0 V	9 ~ 14 V	0 V
L	9 ~ 14 V	0 V	0 V	9 ~ 14 V

HINT:

*: The voltage will drop slightly due to lighting up of the back up light.

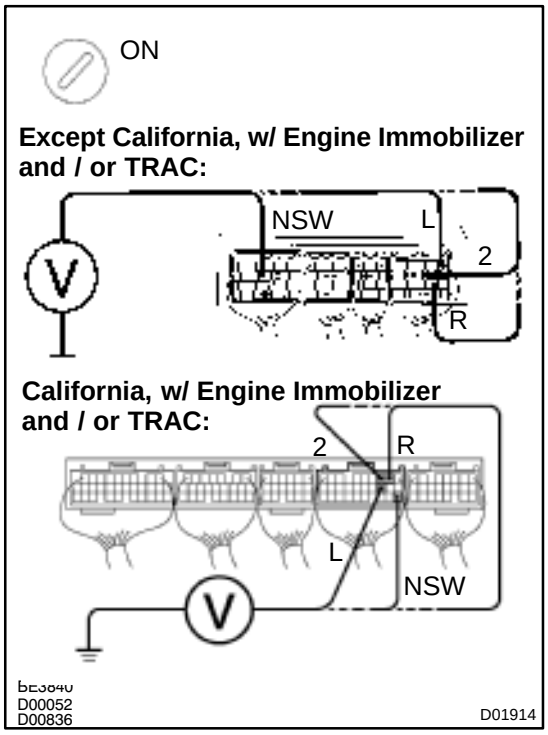

OK → **Proceed to next circuit inspection shown on matrix chart (See page DI–453).**

NG

2	**Check park/neutral position switch.**

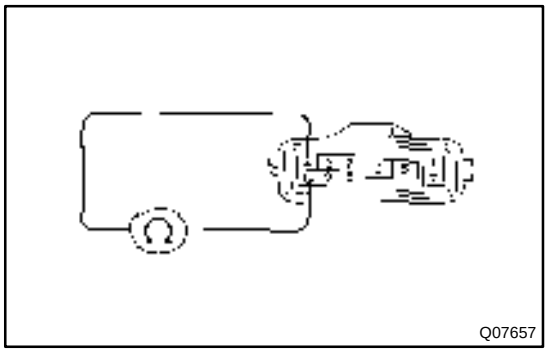

PREPARATION:

(a) Jack up the vehicle.

(b) Remove the park/neutral position switch.

CHECK:

Check continuity between each terminal shown below when the shift lever is moved to each position.

Shift Position	Terminal No. to continuity	
P	2 – 7	5 – 6
R	2 – 8	–
N	2 – 9	5 – 6
D	2 – 10	–
2	2 – 3	–
L	2 – 4	–

OK:

There is continuity.

NG → **Replace the park/neutral position switch.**

OK

3	**Check harness and connector between battery and park/neutral position switch, park/neutral position switch and ECM (See page IN–31).**

NG → **Repair or replace the harness and connector.**

OK

Check and replace the ECM.

O/D Cancel Signal Circuit

CIRCUIT DESCRIPTION

While driving uphill with cruise control activated, in order to minimize gear shifting and provide smooth cruising overdrive may be prohibited temporarily under some condition.
The cruise control ECU sends O/D cut signals to the ECM as necessary and the ECM cancels overdrive shifting until these signals are discontinued.

WIRING DIAGRAM

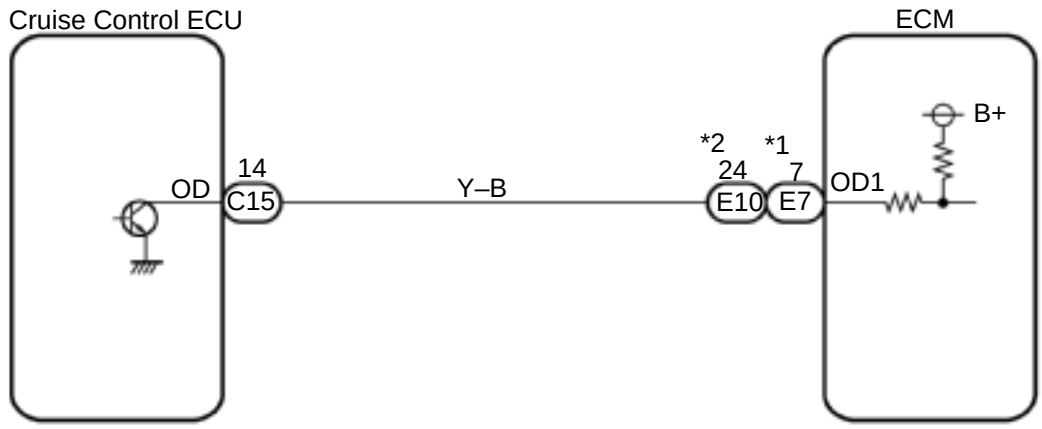

*1: Except California, w/ Engine Immobilizer and / or TRAC
*2: California, w/ Engine Immobilizer and / or TRAC

D01899

INSPECTION PROCEDURE

1	**Check voltage between terminal OD1 of ECM and body ground.**

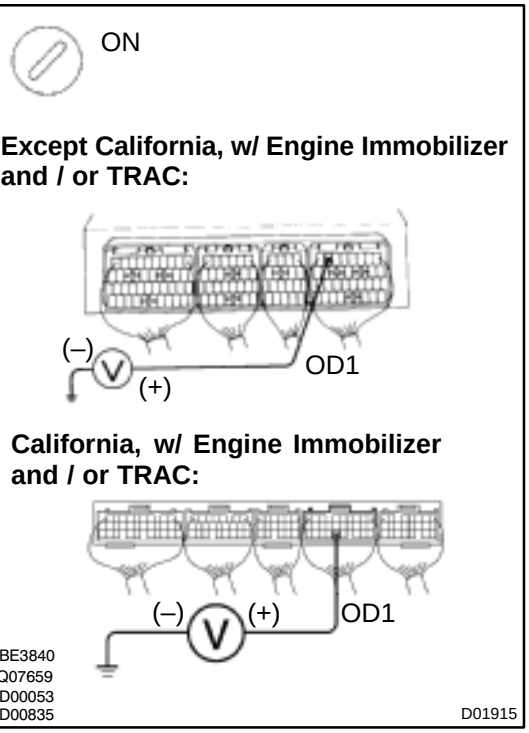

PREPARATION:

Turn the ignition switch ON.

CHECK:

Measure voltage between terminal OD1 of ECM and body ground.

OK:

Voltage: 10 ~ 14 V

OK → **Proceed to next circuit inspection shown on matrix chart (See page DI–453).**

NG

2	**Check voltage between terminal OD of cruise control ECU harness side connector and body ground.**

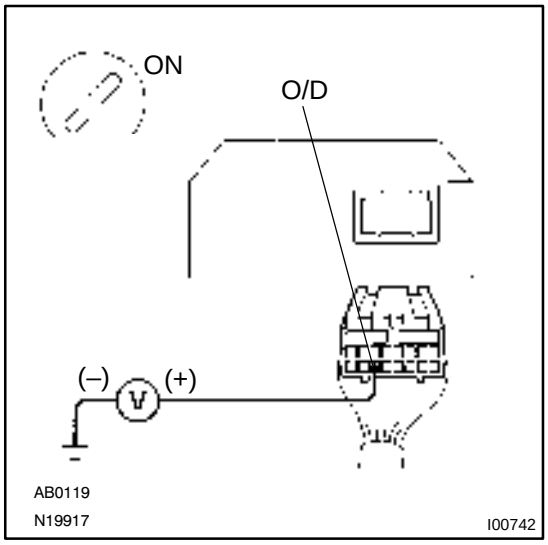

PREPARATION:

(a) Disconnect the cruise control ECU connector.

(b) Turn the ignition switch ON.

CHECK:

Measure voltage between terminal OD of cruise control ECU harness side connector and body ground.

OK:

Voltage: 10 ~ 14 V

OK → **Check and replace the cruise control ECU.**

NG

3	**Check harness and connector between cruise control ECU and ECM.**

NG → **Repair or replace the harness or connector.**

OK

Check and replace the ECM.

DI1KD–01

O/D Main Switch & O/D OFF Indictor Light Circuit

CIRCUIT DESCRIPTION

The O/D main switch contacts go open when the switch is pushed in and go closed when it is pushed out. In O/D main switch at OFF position, the O/D OFF indicator light lights up, and the ECM prohibits shifting overdrive.

WIRING DIAGRAM

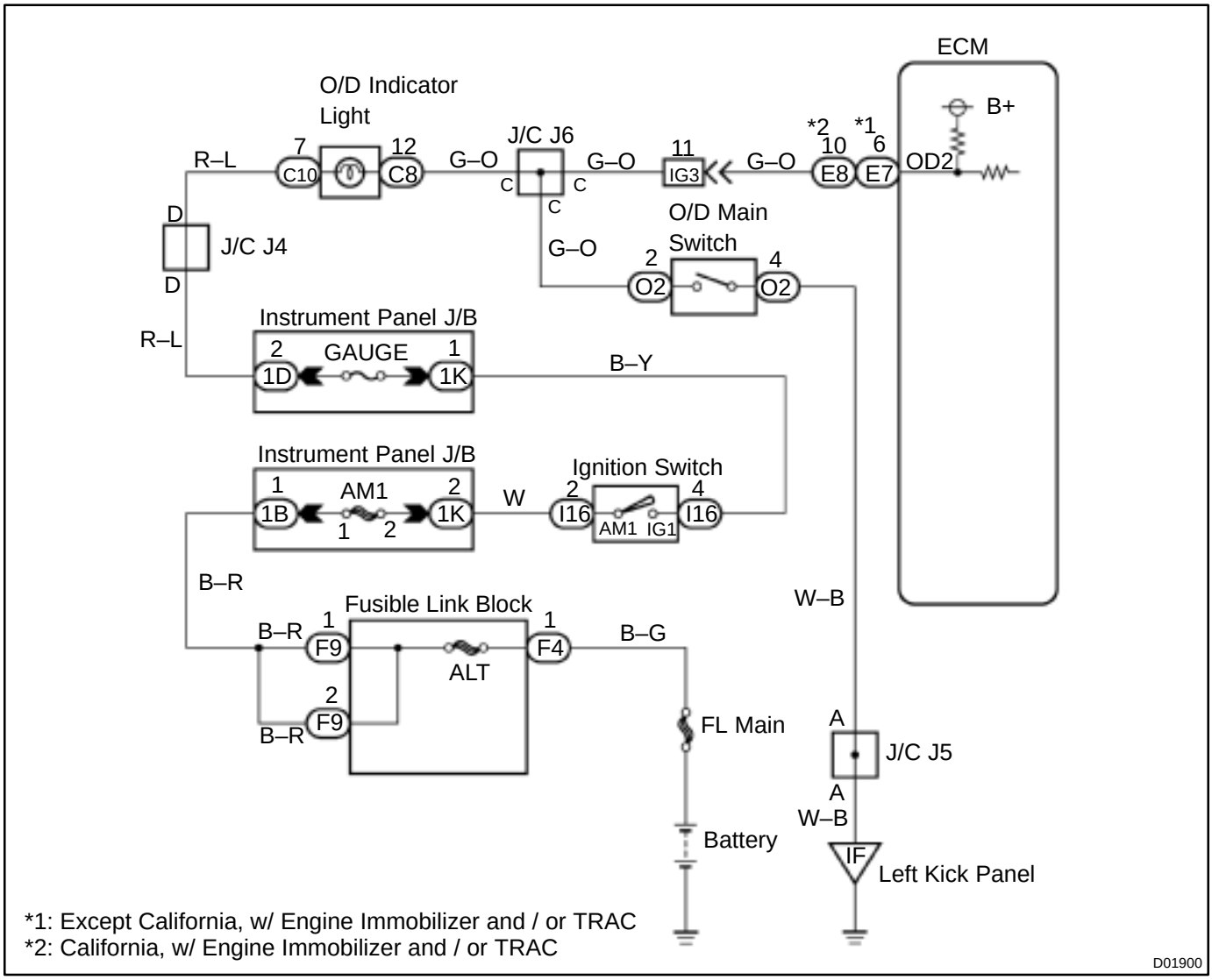

*1: Except California, w/ Engine Immobilizer and / or TRAC
*2: California, w/ Engine Immobilizer and / or TRAC

D01900

INSPECTION PROCEDURE
O/D OFF indicator light does not light up

1	**Check O/D main switch.**

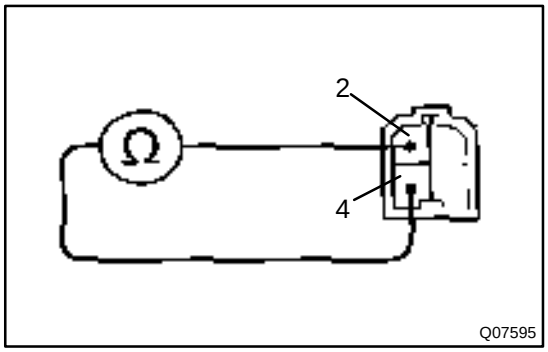

PREPARATION:
Disconnect the O/D main switch connector.
CHECK:
Check continuity between terminals 2 and 4 of O/D main switch connector.
OK:

O/D main switch	Resistance
ON	∞ Ω (open)
OFF	0 Ω (continuity)

NG → **Replace the O/D main switch.**

OK

2	**Check and replace the combination meter (See page BE–2).**

NG → **Replace the combination meter.**

OK

3	**Check OVRDRIVE CUT SW2 signal.**

When using TOYOTA hand–held tester
PREPARATION:
(a) Connect a TOYOTA hand–held tester to the DLC3.
(b) Turn the ignition switch ON and TOYOTA hand–held tester main switch ON.
CHECK:
Read the OVRDRIVE CUT SW2 signal on the TOYOTA hand–held tester.
OK:

O/D main switch condition	OVRDRIVE CUT SW2 signal
Pushed in	OFF
Pushed out	ON

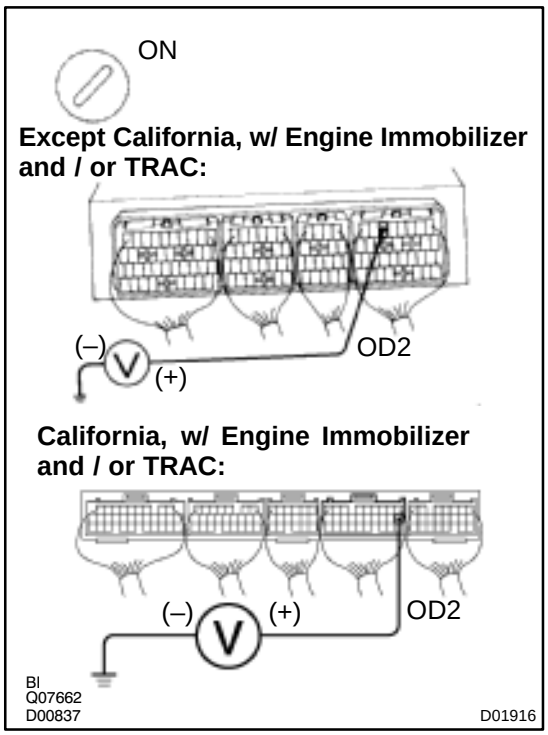

When not using TOYOTA hand–held tester

PREPARATION:

Turn the ignition switch ON.

CHECK:

Check voltage between terminal OD2 of ECM and body ground.

OK:

O/D main switch	Voltage
OFF	Below 1 V
ON	10 ~ 14 V

NG → **Check and replace the ECM.**

NG

4	**Check harness and connector between O/D OFF indicator light and ECM (See page IN–31).**

NG → **Repair or replace the harness or connector.**

OK

Check and replace the ECM.

O/D OFF indicator light remains on

1	**Check O/D main switch.**

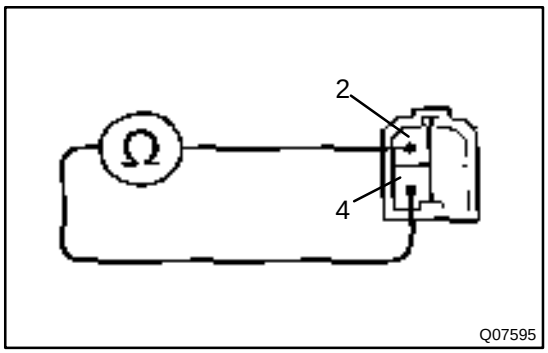

PREPARATION:
Disconnect the O/D main switch connector.
CHECK:
Check continuity between terminals 2 and 4 of O/D main switch connector.
OK:

O/D main switch	Resistance
ON	∞ Ω (open)
OFF	0 Ω (continuity)

NG → **Replace the O/D main switch.**

OK

2	**Check harness and connector between O/D OFF indicator light and O/D main switch, O/D OFF indicator light and ECM (See page IN–31).**

NG → **Repair or replace the harness or connector.**

OK

Check and replace the ECM.

ANTI–LOCK BRAKE SYSTEM (DENSO Made)

DI03A–02

HOW TO PROCEED WITH TROUBLESHOOTING

Troubleshoot in accordance with the procedure on the following pages.

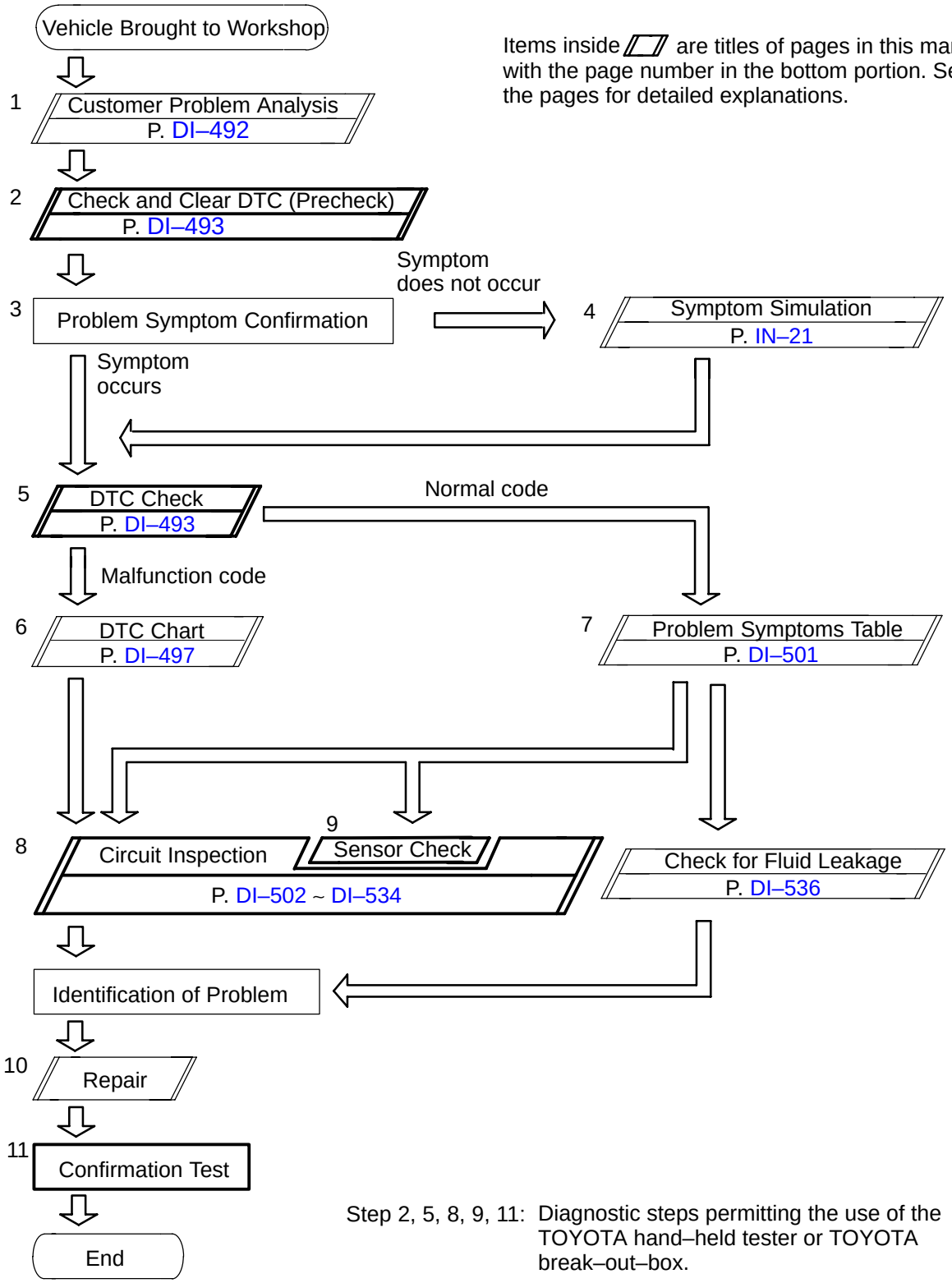

Items inside ▱ are titles of pages in this manual, with the page number in the bottom portion. See the pages for detailed explanations.

Step 2, 5, 8, 9, 11: Diagnostic steps permitting the use of the TOYOTA hand–held tester or TOYOTA break–out–box.

DI03B–02

CUSTOMER PROBLEM ANALYSIS CHECK

ABS Check Sheet

Inspector's Name :

Customer's Name		**Registration No.**	
		Registration Year	/ /
		Frame No.	
Date Vehicle Brought In	/ /	**Odometer Reading**	km miles

Date Problem First Occurred	/ /
Frequency Problem Occurs	☐ Continuous ☐ Intermittent (times a day)

Symptoms	☐ ABS does not operate.	
	☐ ABS does not operate efficiently.	
	ABS Warning Light Abnormal	☐ Remains ON ☐ Does not Light Up

DTC Check	**1st Time**	☐ Normal Code ☐ Malfunction Code (Code)
	2nd Time	☐ Normal Code ☐ Malfunction Code (Code)

DI03C–03

PRE–CHECK

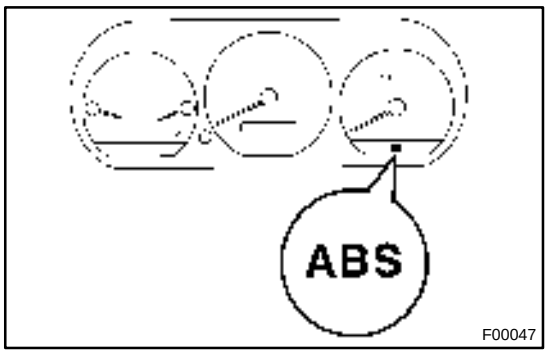

1. DIAGNOSIS SYSTEM

(a) Check the indicator.

When the ignition switch is turned ON, check that the ABS warning light goes on for 3 seconds.

HINT:

If the indicator check result is not normal, proceed to troubleshooting for the ABS warning light circuit (See page DI–529).

(b) Check the DTC.

(1) Disconnect the short pin from DLC1.

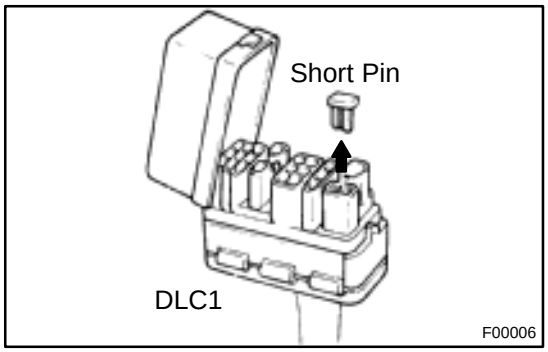

(2) Using SST, connect terminals Tc and E_1 of DLC2 or DLC1.

SST 09843 – 18020

(3) Turn the ignition switch ON.

(4) Read the DTC from the ABS warning light on the combination meter.

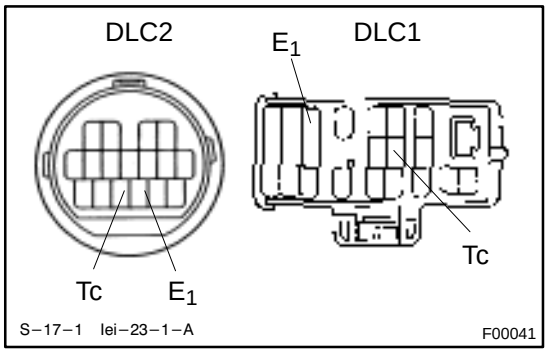

HINT:

- If no code appears, inspect the diagnostic circuit or ABS warning light circuit (See page DI–532 or DI–529).

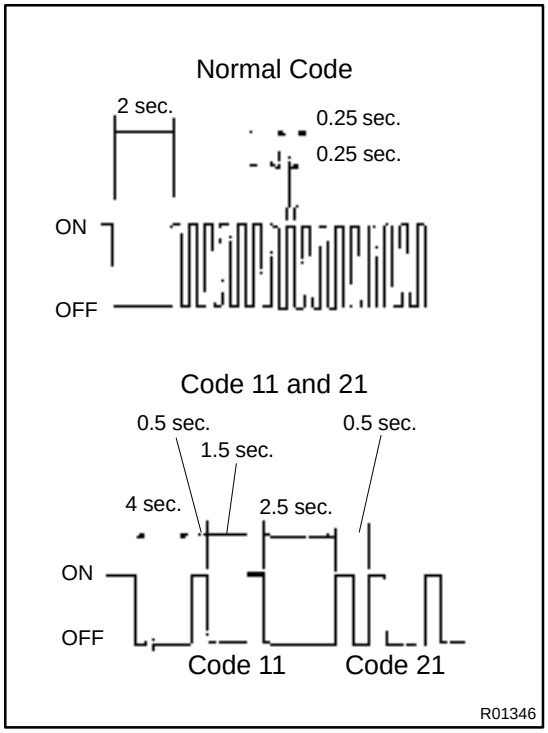

- As an example, the blinking patterns for normal code and codes 11 and 21 are shown on the left.

(5) Codes are explained in the code table on page DI–497.

(6) After completing the check, disconnect terminals Tc and E_1, and turn off the display.

If 2 or more malfunctions are indicated at the same time the lowest numbered DTC will be displayed 1st.

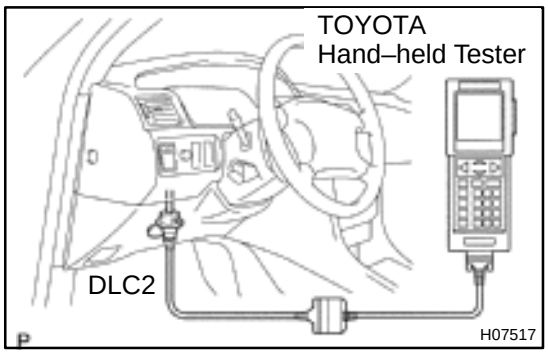

(c) Using TOYOTA hand–held tester, check the DTC.
(1) Hook up the TOYOTA hand–held tester to the DLC2.
(2) Read the DTC by following the prompts on the tester screen.
Please refer to the TOYOTA hand–held tester operator's manual for further details.

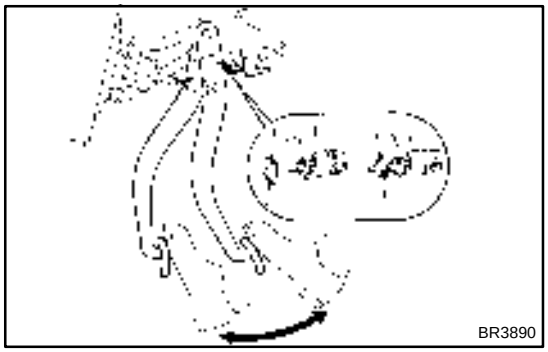

(d) Clear the DTC.
(1) Using SST, connect terminals Tc and E_1 of DLC2 or DLC1 and remove the short pin from DLC1.
SST 09843 – 18020
(2) Turn the ignition switch ON.
(3) Clear the DTC stored in ECU by depressing the brake pedal 8 or more times within 5 seconds.

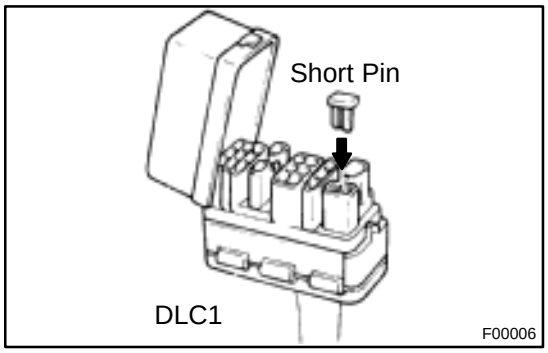

(4) Check that the warning light shows the normal code.
(5) Remove the SST from the terminals of DLC2 or DLC1.
SST 09843 – 18020
(6) Connect the short pin to DLC1.

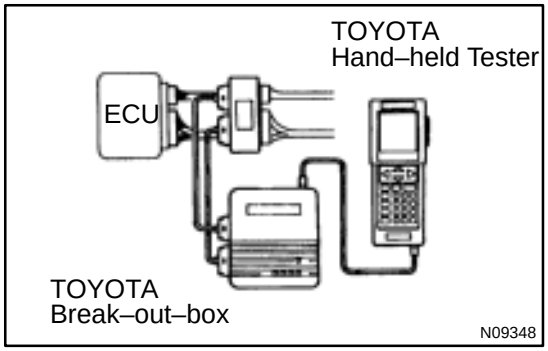

(e) Using TOYOTA break–out–box and TOYOTA hand–held tester, measure the ECU terminal values.
(1) Hook up the TOYOTA hand–held tester and TOYOTA break–out–box to the vehicle.
(2) Read the ECU input/output values by following the prompts on the tester screen.

HINT:
TOYOTA hand–held tester has a "Snapshot" function. This records the measured values and is effective in the diagnosis of intermittent problems.
Please refer to the TOYOTA hand–held tester/TOYOTA break–out–box operator's manual for further details.

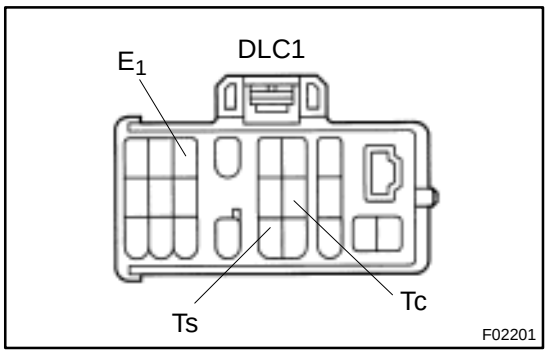

2. SPEED SENSOR SIGNAL

(a) Check the speed sensor signal.

(1) Turn the ignition switch OFF.

(2) Using SST, connect terminals Ts and E_1 of DLC1.

SST 09843 – 18020

(3) Start the engine.

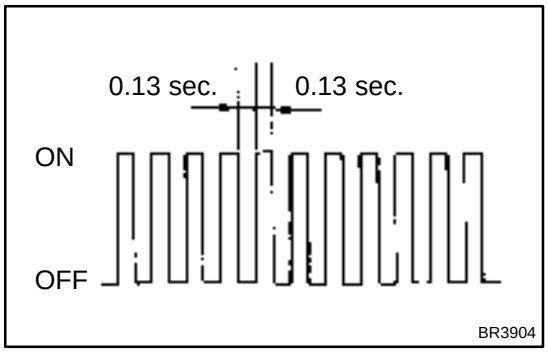

(4) Check that the ABS warning light blinks.

HINT:

If the ABS warning light does not blink, inspect the ABS warning light circuit (See page DI–529).

(5) Drive vehicle straight forward.

HINT:

Drive vehicle faster than 45 km/h (28 mph) for several seconds.

(6) Stop the vehicle.

(7) Using SST, connect terminals Tc and E_1 of DLC1.

SST 09843 – 18020

(8) Read the number of blinks of the ABS warning light.

HINT:

- See the list of DTC shown on the next page.
- If every sensor is normal, a normal code is output (A cycle of 0.25 sec. ON and 0.25 sec. OFF is repeated).
- If 2 or more malfunctions are indicated at the same time, the lowest numbered code will be displayed 1st.

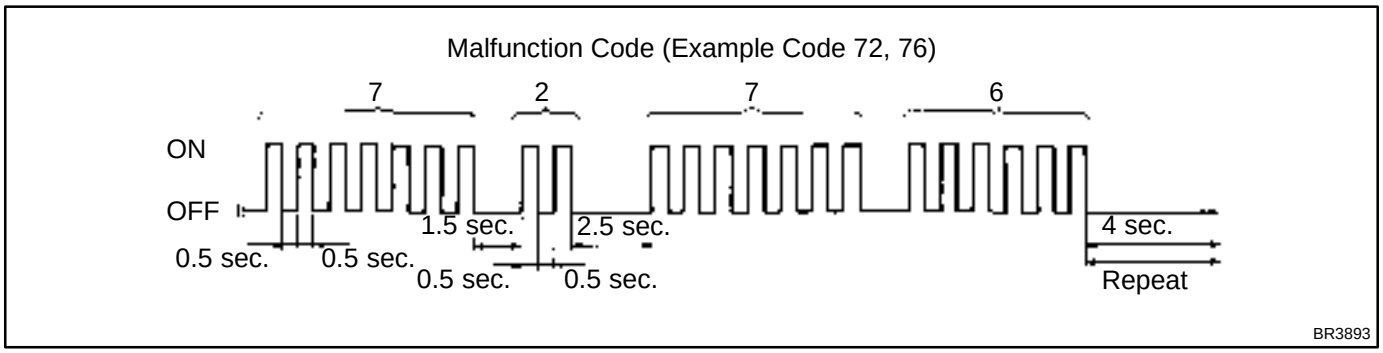

(9) After doing the check, disconnect the SST from terminals Ts and E_1, Tc and E_1 of DLC1, and turn ignition switch OFF.

SST 09843 – 18020

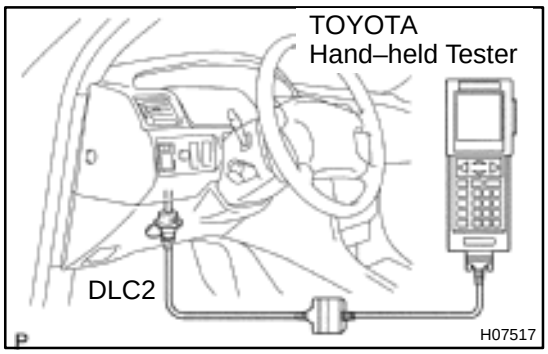

(b) Using TOYOTA hand–held tester, check the DTC.
(1) Do step 1. ~ 6. on the previous page.
(2) Hook up the TOYOTA hand–held tester to the DLC2.
(3) Read the DTC by following the prompts on the tester screen.
Please refer to the TOYOTA hand–held tester operator's manual for further details.

DTC of speed sensor check function:

Code No.	Diagnosis	Trouble Area
71	Low output voltage of right front speed sensor	●Right front speed sensor ●Sensor installation ●Right front speed sensor rotor
72	Low output voltage of left front speed sensor	●Left front speed sensor ●Sensor installation ●Left front speed sensor rotor
73	Low output voltage of right rear speed sensor	●Right rear speed sensor ●Sensor installation ●Right rear speed sensor rotor
74	Low output voltage of left rear speed sensor	●Left rear speed sensor ●Sensor installation ●Left rear speed sensor rotor
75	Abnormal change in output voltage of right front speed sensor	●Right front speed sensor rotor
76	Abnormal change in output voltage of left front speed sensor	●Left front speed sensor rotor
77	Abnormal change in output voltage of right rear speed sensor	●Right rear speed sensor rotor
78	Abnormal change in output voltage of left rear speed sensor	●Left rear speed sensor rotor

DI03D–03

DIAGNOSTIC TROUBLE CODE CHART

HINT:

- Using SST 09843 –18020, connect the terminals Tc and E_1, and remove the short pin.
- If any abnormality is not found when inspection parts, inspect the ECU.
- If a malfunction code is displayed during the DTC check, check the circuit listed for the code. For details of each code, turn to the page referred to under the ”See page” for respective ”DTC No.” in the DTC chart.

DTC No. (See Page)	Detection Item	Trouble Area
11 (DI–502)	Open circuit in ABS solenoid relay circuit	●ABS solenoid relay ●ABS solenoid relay circuit
12 (DI–502)	Short circuit in ABS solenoid relay circuit	
13 (DI–507)	Open circuit in ABS motor relay circuit	●ABS motor relay ●ABS motor relay circuit
14 (DI–507)	Short circuit in ABS motor relay circuit	
21 (DI–511)	Open or short circuit in 2–position solenoid circuit for right front wheel	●ABS actuator ●SFRR or SFRH circuit
22 (DI–511)	Open or short circuit in 2–position solenoid circuit for left front wheel	●ABS actuator ●SFLR or SFLH circuit
23 (DI–511)	Open or short circuit in 2–position solenoid circuit for right rear wheel	●ABS actuator ●SRRR or SRRH circuit
24 (DI–511)	Open or short circuit in 2–position solenoid circuit for left rear wheel	●ABS actuator ●SRLR or SRLH circuit
31 (DI–514)	Right front wheel speed sensor signal malfunction	●Right front, left front, right rear and left rear speed sensor ●Each speed sensor circuit ●Speed sensor rotor
32 (DI–514)	Left front wheel speed sensor signal malfunction	
33 (DI–514)	Right rear wheel speed sensor signal malfunction	
34 (DI–514)	Left rear wheel speed sensor signal malfunction	
33, 34 (DI–519)	Rear speed sensor rotor faulty	●Rear axle hub ●Right rear, left rear speed sensor ●Rear speed sensor circuit
41 (DI–520)	Power source voltage down	●Battery ●Charging system ●Power source circuit
49 (DI–523)	Open circuit in stop light switch circuit	●Stop light switch ●Stop light switch circuit
51 (DI–525)	Pump motor is locked	●ABS pump motor
Always ON (DI–527)	Malfunction in ECU	●ECU ●Battery

DI03E–03

PARTS LOCATION

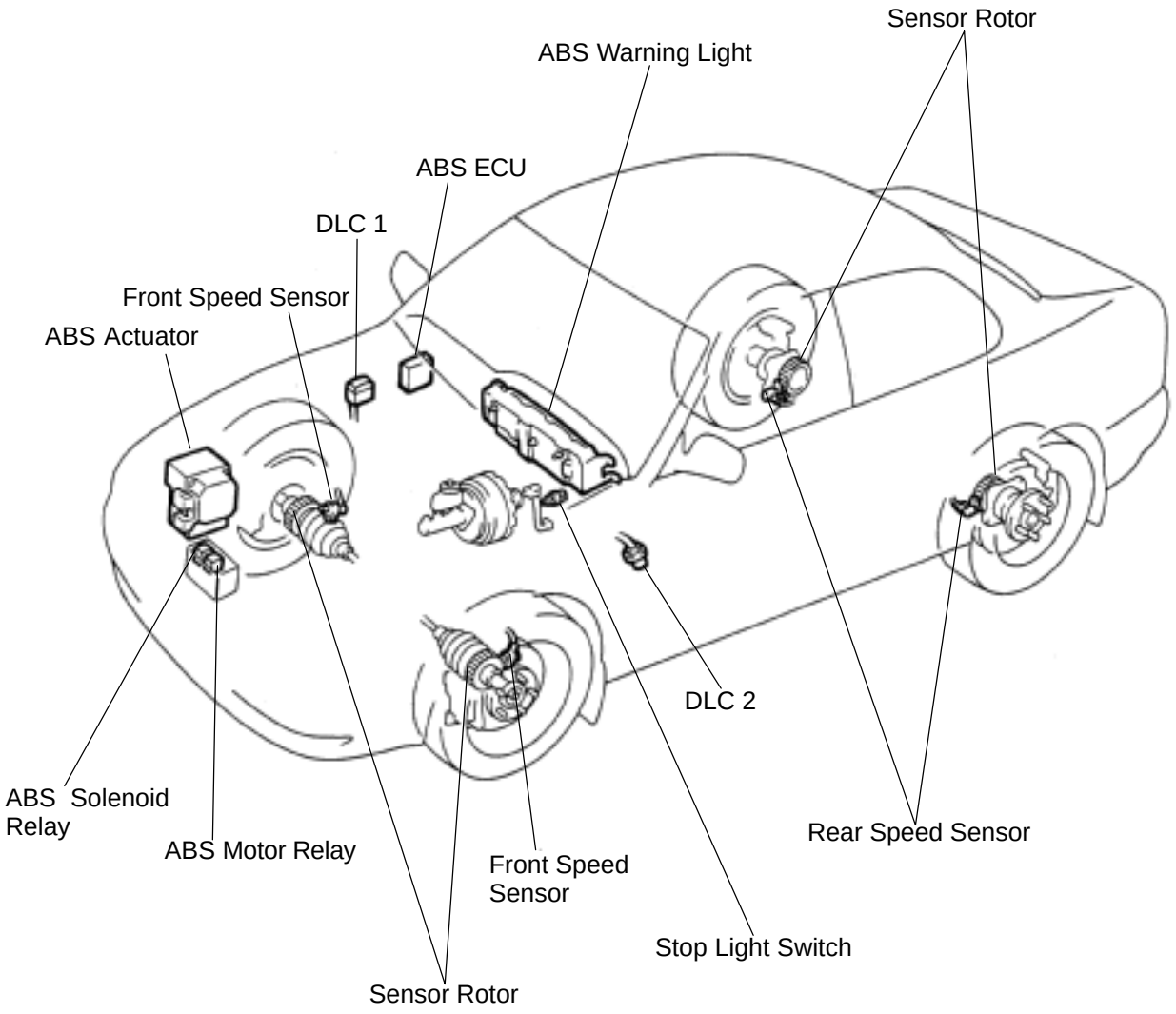

F01172

DI1JL–02

TERMINALS OF ECU

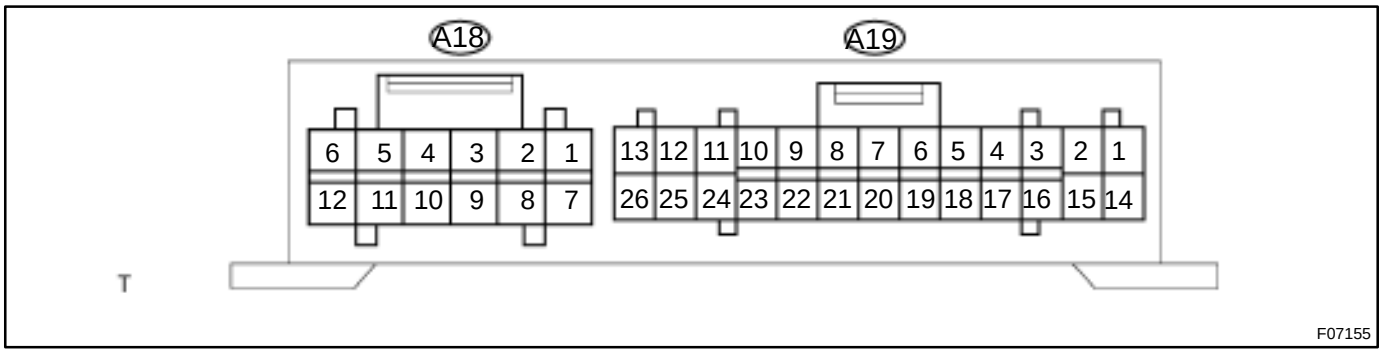

Symbols (Terminals No.)	Wiring Color	Condition	STD Voltage (V)
IG1 (A19 – 13) – GND (A19 – 12, 25)	B–R ↔ W–B	IG switch ON	10 – 14
R+ (A19 – 26) – SR (A18 – 7)	GR–R ↔ GR	IG switch ON, ABS warning light OFF	9 – 14
R+ (A19 – 26) – MR (A18 – 1)	GR–R ↔ GR–L	IG switch ON	Below 1.0
SFRR (A19 – 1) – GND (A19 – 12, 25)	W–R ↔ W–B	IG switch ON, ABS warning light OFF	10 – 14
SFRH (A19 – 2) – GND (A19 – 12, 25)	R–B ↔ W–B	IG switch ON, ABS warning light OFF	10 – 14
SFLR (A18 – 6) – GND (A19 – 12, 25)	W–L ↔ W–B	IG switch ON, ABS warning light OFF	10 – 14
SFLH (A18 – 5) – GND (A19 – 12, 25)	L–B ↔ W–B	IG switch ON, ABS warning light OFF	10 – 14
SRRR (A18 – 12) – GND (A19 – 12, 25)	R–G ↔ W–B	IG switch ON, ABS warning light OFF	10 – 14
SRRH (A18 – 11) – GND (A19 – 12, 25)	W–R ↔ W–B	IG switch ON, ABS warning light OFF	10 – 14
SRLR (A19 – 14) – GND (A19 – 12, 25)	LG–B ↔ W–B	IG switch ON, ABS warning light OFF	10 – 14
SRLH (A19 – 15) – GND (A19 – 12, 25)	G–Y ↔ W–B	IG switch ON, ABS warning light OFF	10 – 14
WA (A19 – 11) – GND (A19 – 12, 25)	G–B ↔ W–B	IG switch ON, ABS warning light ON	Below 2.0
		IG switch ON, ABS warning light OFF	10 – 14
STP (A19 – 5) – GND (A19 – 12, 25)	G–W ↔ W–B	Stop light switch OFF	Below 1.5
		Stop light switch ON	8 – 14
D/G (A19 – 24) – GND (A19 – 12, 25)	R–L ↔ W–B	IG switch ON, ABS warning light OFF	10 – 14
Tc (A19 – 8) – GND (A19 – 12, 25)	LG–R ↔ W–B	IG switch ON	8 – 14
Ts (A19 – 21) – GND (A19 – 12, 25)	R–Y ↔ W–B	IG switch ON	8 – 14
FR+ (A18 – 3) – FR– (A18 – 9)	W ↔ B	IG switch ON, slowly turn right front wheel	AC generation
FL+ (A18 – 8) – FL– (A18 – 2)	R ↔ G	IG switch ON, slowly turn left front wheel	AC generation
RR+ (A19 – 10) – RR– (A19 – 23)	W ↔ B	IG switch ON, slowly turn right rear wheel	AC generation

RL+ (A19 – 22) – RL– (A19 – 9)	R ↔ G	IG switch ON, slowly turn left rear wheel	AC generation
MT (A18 – 10) – GND (A18 – 12, 25)	R–W ↔ W–B	IG switch ON	Below 1.5

DI03G–04

PROBLEM SYMPTOMS TABLE

If a normal code is displayed during the DTC check but the problem still occurs, check the circuits for each problem symptom in the order given in the table below and proceed to the relevant troubleshooting page.

Symptom	Suspect Area	See page
ABS does not operate	Only when 1. to 4. are all normal and the problem is still occurring, replace the ABS ECU. 13.Check the DTC reconfirming that the normal code is output. 14.IG power source circuit. 15.Speed sensor circuit. 16.Check the ABS actuator with a checker. If abnormal, check the hydraulic circuit for leakage (See page DI–536).	 DI–493 DI–520 DI–514 BR–50
ABS does not operate efficiently	Only when 1. το 4. are all normal and the problem is still occurring, replace the ABS ECU. 1. Check the DTC reconfirming that the normal code is output. 2. Speed sensor circuit 3. Stop light switch circuit 4. Check the ABS actuator with a checker. If abnormal, check the hydraulic circuit for leakage (See page DI–536).	 DI–493 DI–514 DI–523 BR–50
ABS warning light abnormal	1. ABS warning light circuit 2. ABS ECU	DI–529 DI–527
DTC check cannot be done	Only when 1. and 2. are all normal and the problem is still occurring, replace the ABS ECU. 1. ABS warning light circuit 2. Tc terminal circuit	 DI–529 DI–532
Speed sensor signal check cannot be done	1. Ts terminal circuit 2. ABS ECU	DI–534 DI–527

DI03H–03

CIRCUIT INSPECTION

DTC	11, 12	ABS Solenoid Relay Circuit

CIRCUIT DESCRIPTION

This relay supplies power to each ABS solenoid. After the ignition switch is turned ON, if the initial check is OK, the relay goes on.

DTC No.	DTC Detecting Condition	Trouble Area
11	Condition 1. or 2. continues for 0.2 sec. or more: 1. IG1 terminal voltage of ABS ECU is 9.5 – 18.5 V, and when the solenoid relay is ON.*1 2. With solenoid relay ON driving, when IG1 terminal of ABS ECU is less than 9.5 V.*1	●ABS solenoid relay ●ABS solenoid relay circuit ●ECU
12	Immediately after IG switch has been turned ON, when the solenoid relay is OFF.*2	

*1 Solenoid relay contact OFF condition:
All of solenoid terminal voltage is half of IG1 terminal voltage or less than.
*2 Solenoid relay contact ON condition:
All of solenoid terminal voltage is half of IG 1 terminal voltage or more.
Fail safe function:
If trouble occurs in the ABS solenoid relay circuit, the ECU cuts off current to the ABS solenoid relay and prohibits ABS control.

WIRING DIAGRAM

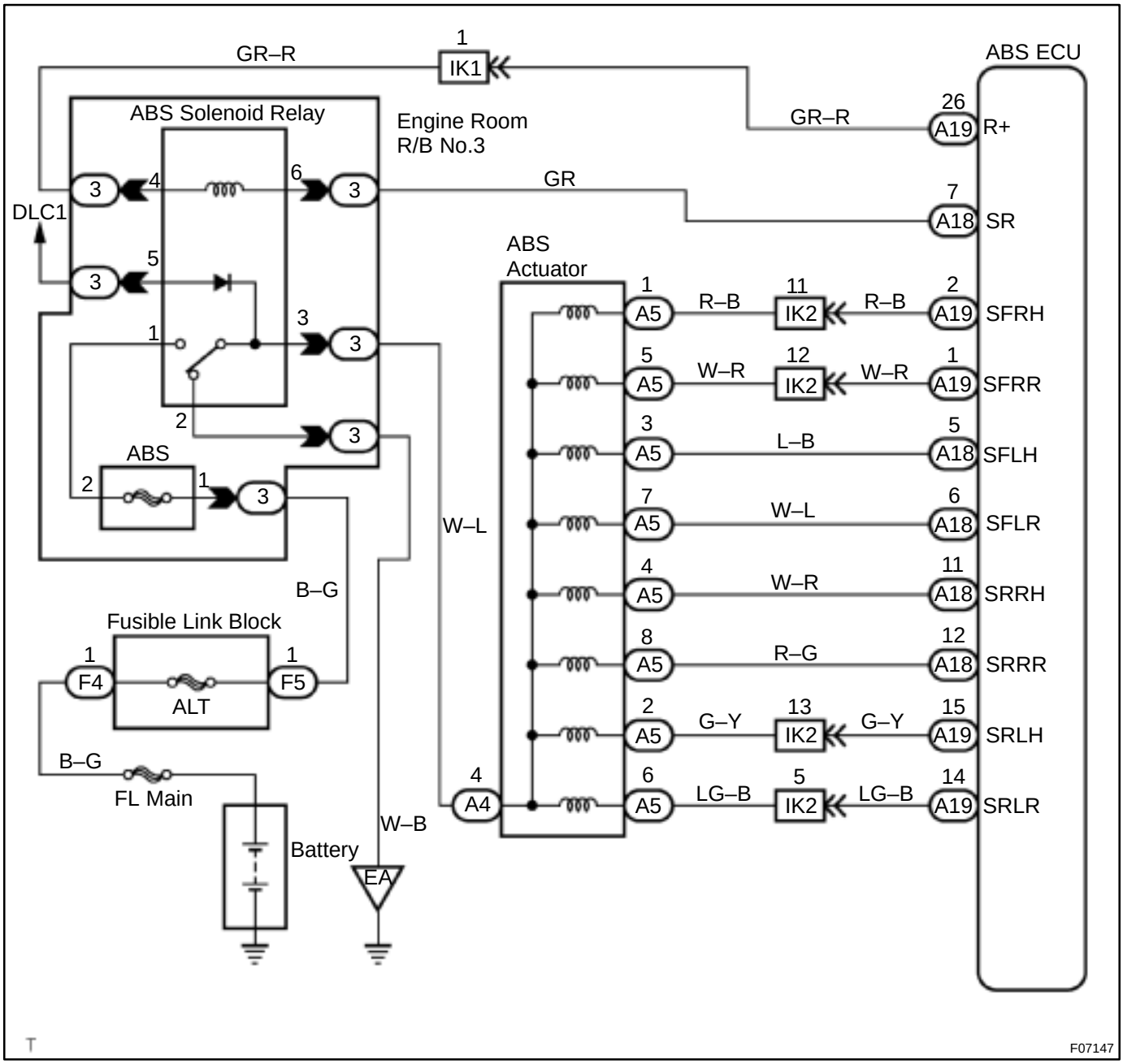

INSPECTION PROCEDURE

1	**Check voltage between terminals 1 and 2 of Engine Room R/B No. 3 (for ABS solenoid relay).**

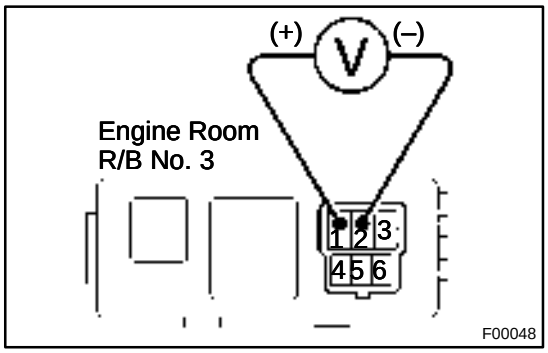

PREPARATION:
Remove ABS solenoid relay from Engine Room R/B No. 3.
CHECK:
Measure the voltage between terminals 1 and 2 of Engine Room R/B No. 3 (for ABS solenoid relay).
OK:
Voltage: 10 – 14 V

NG → **Check and repair harness or connector.**

OK

2	**Check continuity between terminal 3 of ABS solenoid relay and terminal SRLR, SRLH, SRRR, SRRH, SFLR, SFLH, SFRR or SFRH of ABS ECU.**

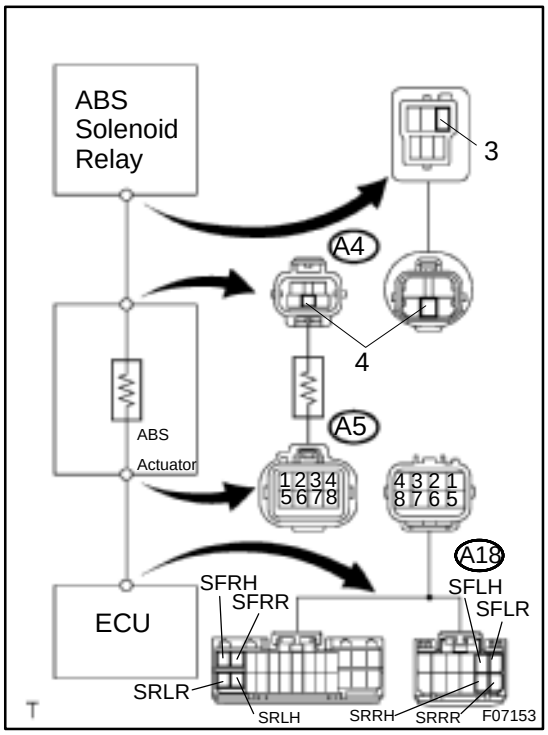

CHECK:
Check continuity between terminal 3 of Engine Room R/B No.3 (for ABS solenoid relay) and terminal SRLR, SRLH, SRRR, SRRH, SFLR, SRLH, SFRR or SFRH of ABS ECU.
OK:
Continuity
HINT:
Resistance of each solenoid coil
SRLR, SRRR, SFLR, SFRR: 4.3 Ω
SRLH, SRRH, SFLH, SFRH: 8.8 Ω

NG → **Repair or replace harness or ABS actuator.**

OK

3	Check ABS solenoid relay.

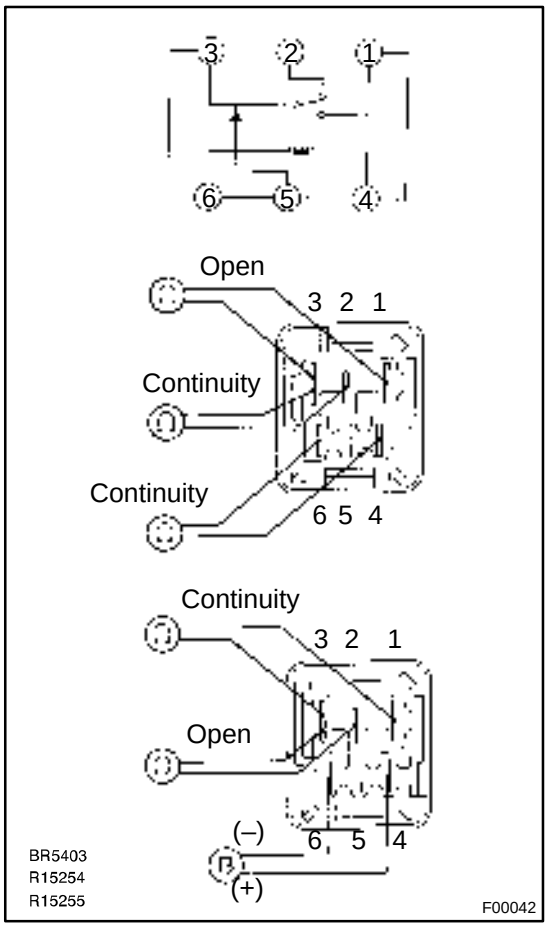

CHECK:

Check continuity between each terminal of ABS solenoid relay.

OK:

Terminals 4 and 6	Continuity (Reference value 80 Ω)
Terminals 2 and 3	Continuity
Terminals 1 and 3	Open

CHECK:

(a) Apply battery positive voltage between terminals 4 and 6.

(b) Check continuity between each terminal of ABS solenoid relay.

OK:

Terminals 2 and 3	Open
Terminals 1 and 3	Continuity

NG → **Replace ABS solenoid relay.**

OK

4	**Check for open and short circuit in harness and connector between ABS solenoid relay and ABS ECU (See page IN–31).**

NG → **Repair or replace harness or connector.**

OK

If the same code is still output after the DTC is deleted, check the contact condition of each connection.
If the connections are normal, the ECU may be defective.

DI03I–03

DTC	13, 14	ABS Motor Relay Circuit

CIRCUIT DESCRIPTION

The ABS motor relay supplies power to the ABS pump motor. While the ABS is activated, the ECU switches the ABS motor relay ON and operates the ABS pump motor.

DTC No.	DTC Detecting Condition	Trouble Area
13	Condition 1. or 2. continues for 0.2 sec. or more: 1. ABS ECU terminal IG1 voltage is 9.5 V to 18.5 V, and when motor relay is ON in the midst of initial check or in operation of ABS control.*1 2. Motor relay is ON driving in the midst of initial check or in operation of ABS control, ABS ECU terminal IG1 voltage becomes 9.5 V or less.*2	●ABS motor relay ●ABS motor relay circuit ●ECU
14	Condition below continues for 4 sec. or more: When the motor relay is OFF, there is open circuit in MT terminal of ABS ECU.	

*1 Relay contact OFF condition: MT terminal voltage is below 3.6 V.

*2 Relay contact ON condition: MT terminal voltage is 3.6 V or above.

Fail safe function:

If trouble occurs in the ABS motor relay circuit, the ECU cuts off current to the ABS solenoid relay and prohibits ABS control.

WIRING DIAGRAM

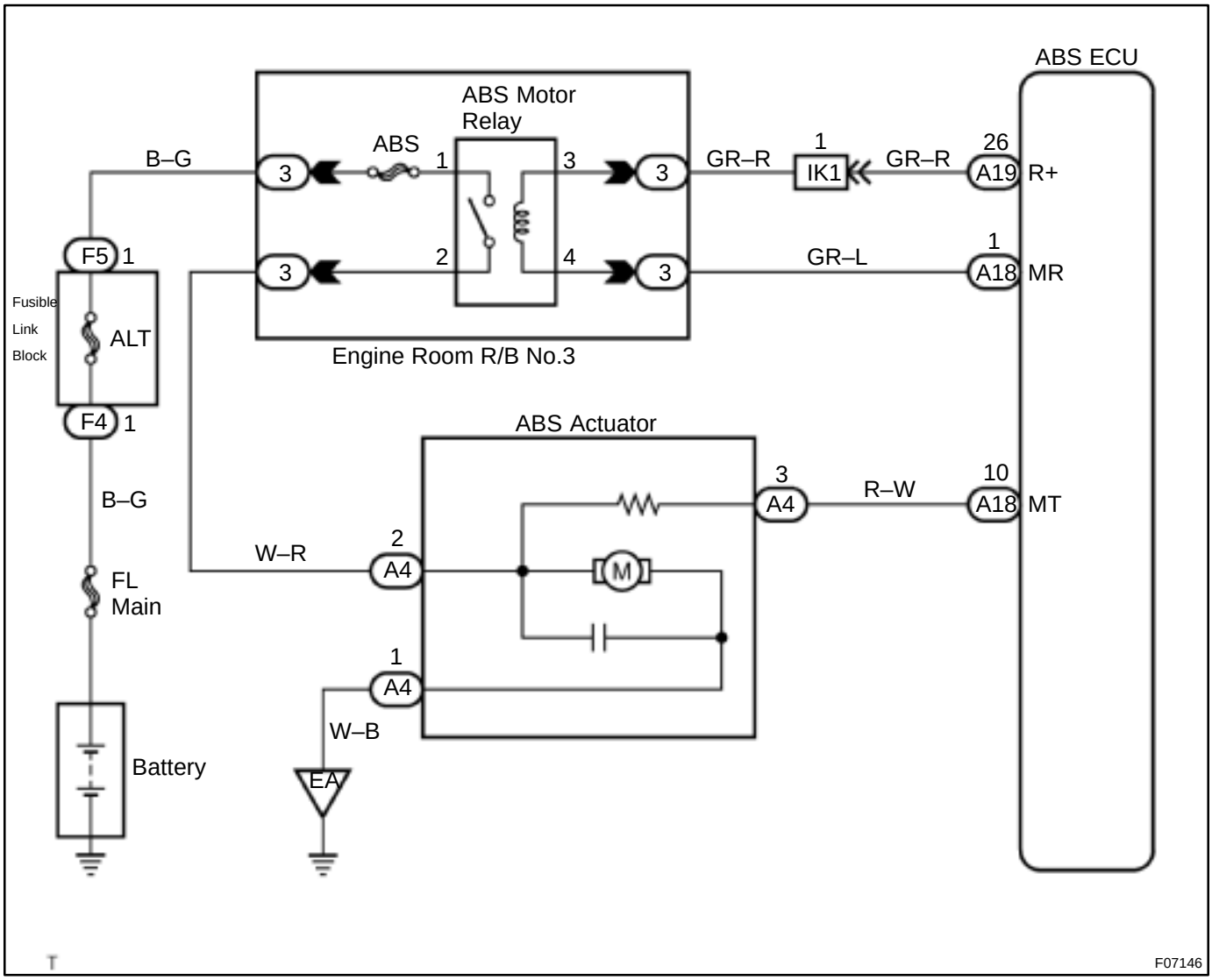

INSPECTION PROCEDURE

1	**Check voltage between terminal 1 of Engine Room R/B No. 3 (for ABS motor relay) and body ground.**

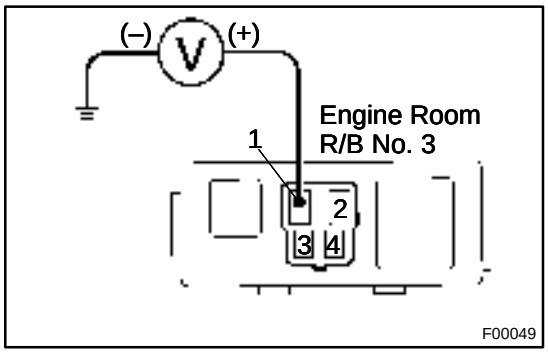

PREPARATION:
Remove ABS motor relay from Engine Room R/B No. 3.
CHECK:
Measure voltage between terminal 1 of Engine Room R/B No. 3 (for ABS motor relay) and body ground.
OK:

Voltage: 10 – 14 V

NG	**Check and repair harness or connector.**

OK

2	**Check continuity between terminal 2 of ABS motor relay and terminal MT of ABS ECU.**

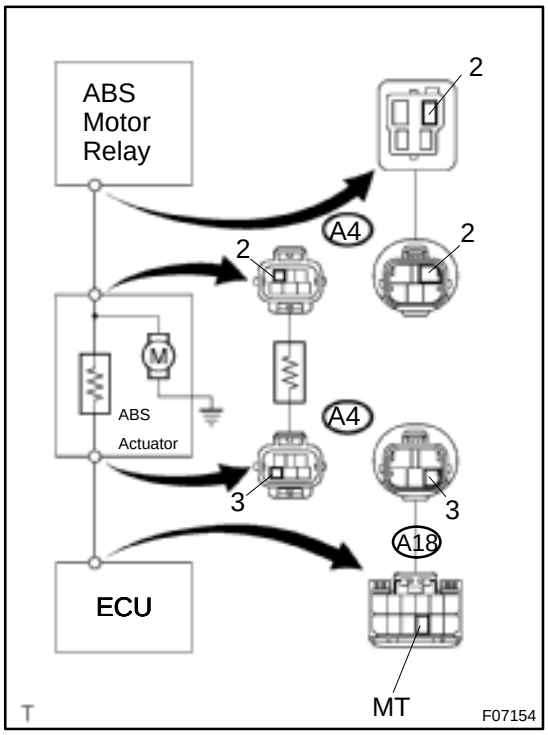

CHECK:
Check continuity between terminal 2 of Engine Room R/B No.3 (for ABS motor relay) and terminal MT of ABS ECU.
OK:

Continuity

HINT:
There is a resistance of 4 ~ 6 Ω between terminals A4 – 2 and A4 – 3 of ABS actuator.

NG	**Repair or replace harness or ABS actuator.**

OK

3	Check ABS motor relay.

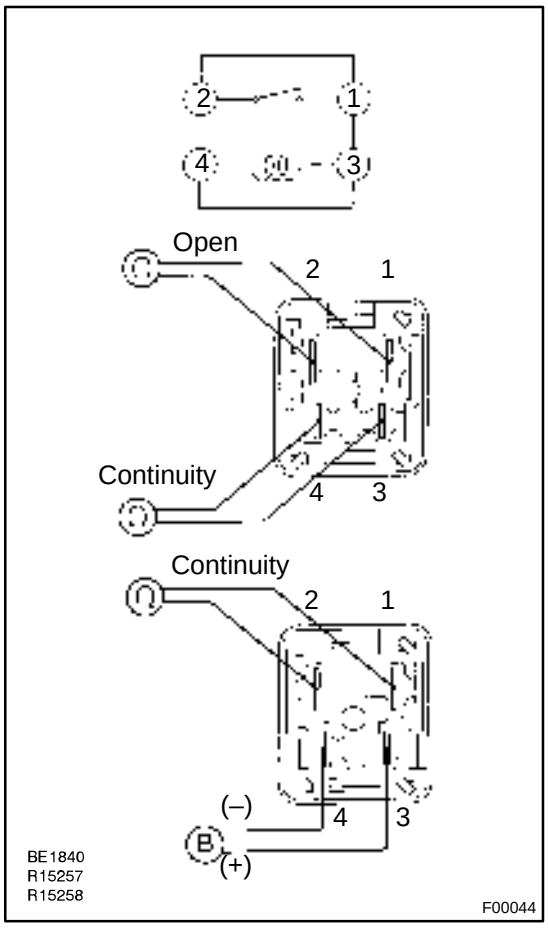

CHECK:

Check continuity between each terminal of ABS motor relay.

OK:

Terminals 3 and 4	Continuity (Reference value 62 Ω)
Terminals 1 and 2	Open

CHECK:

(a) Apply battery positive voltage between terminals 3 and 4.
(b) Check continuity between terminals of ABS motor relay.

OK:

Terminals 1 and 2	Continuity

NG → **Replace ABS motor relay.**

OK

4	Check for open and short circuit in harness and connector between ABS motor relay and ABS ECU (See page IN–31).

NG → **Repair or replace harness or connector.**

OK

If the same code is still output after the DTC is deleted, check the contact condition of each connection.
If the connections are normal, the ECU may be defective.

DI03J–03

DTC	21, 22, 23, 24	ABS Actuator Solenoid Circuit

CIRCUIT DESCRIPTION

This solenoid goes on when signals are received from the ECU and controls the pressure acting on the wheel cylinders thus controlling the braking force.

DTC No.	DTC Detecting Condition	Trouble Area
21	Condition 1. or 2. continues for 0.05 sec. or more: 1. IG1 terminal voltage of ABS ECU is 9.5 – 18.5 V, there is open or short circuit in actuator solenoid SFRR or SFRH. 2. IG1 terminal voltage of ABS ECU is 9.5 – 18.5 V, and while ABS is control in operation.*1	●ABS actuator ●SFRR or SFRH circuit
22	Condition 1. or 2. continues for 0.05 sec. or more: 1. IG1 terminal voltage of ABS ECU is 9.5 – 18.5 V, there is open or short circuit in actuator solenoid SFLR or SFLH. 2. IG1 terminal voltage of ABS ECU is 9.5 – 18.5 V, and while ABS is control in operation.*1	●ABS actuator ●SFLR or SFLH circuit
23	Condition 1. or 2. continues for 0.05 sec. or more: 1. IG1 terminal voltage of ABS ECU is 9.5 – 18.5 V, there is open or short circuit in actuator solenoid SRRR or SRRH. 2. IG1 terminal voltage of ABS ECU is 9.5 – 18.5 V, and while ABS is control in operation.*1	●ABS actuator ●SRRR or SRRH circuit
24	Condition 1. or 2. continues for 0.05 sec. or more: 1. IG1 terminal voltage of ABS ECU is 9.5 – 18.5 V, there is open or short circuit in actuator solenoid SRLR or SRLH. 2. IG1 terminal voltage of ABS ECU is 9.5 – 18.5 V, and while ABS is control in operation.*1	●ABS actuator ●SRLR or SRLH circuit

*1 Solenoid relay contact ON condition:

All of solenoid terminal voltage is half of IG1 terminal voltage or less than.

Fail safe function:

If trouble occurs in the actuator solenoid circuit, the ECU cuts off current to the ABS solenoid relay and prohibits ABS control.

WIRING DIAGRAM

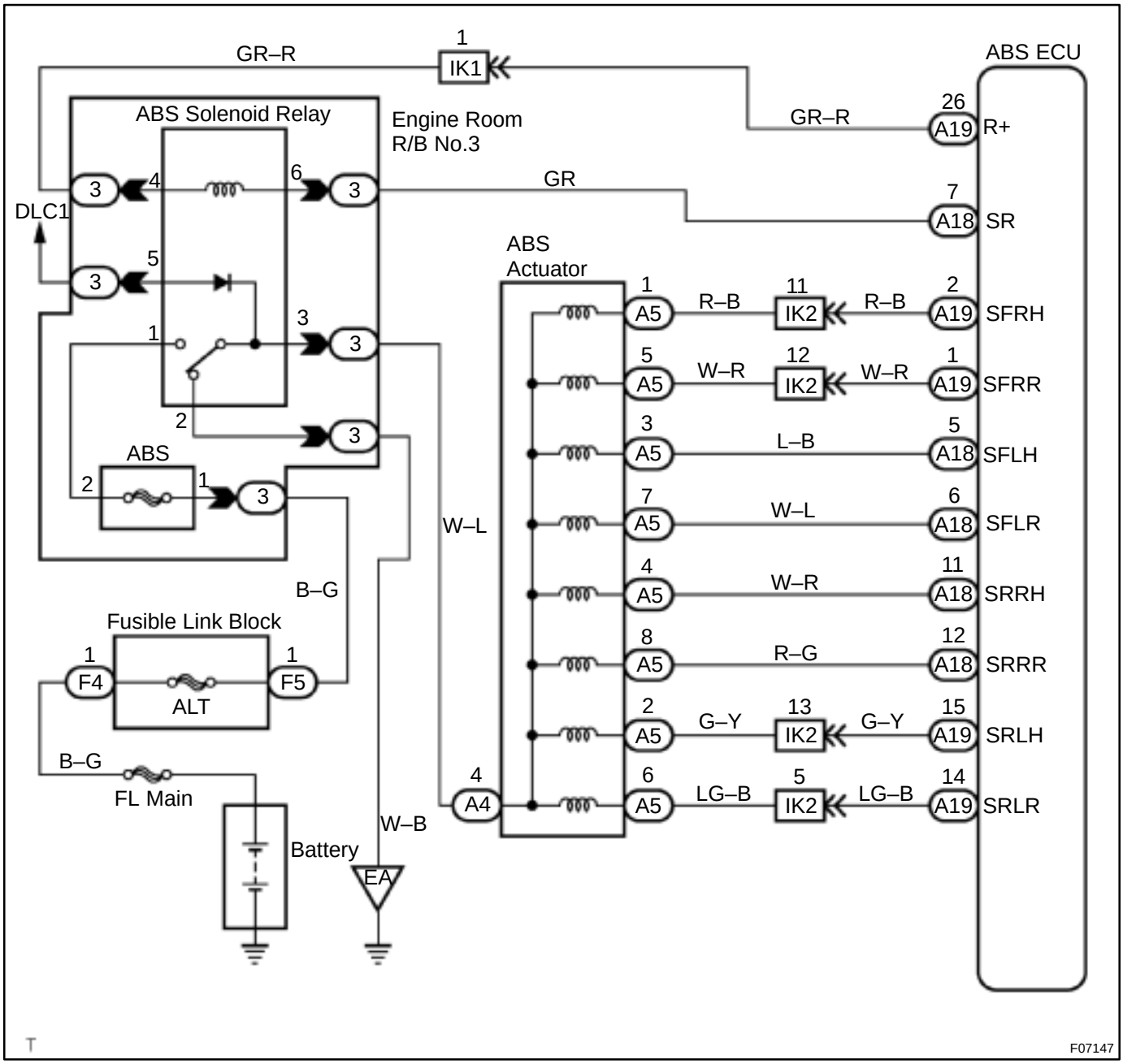

INSPECTION PROCEDURE

1	**Check ABS actuator solenoid.**

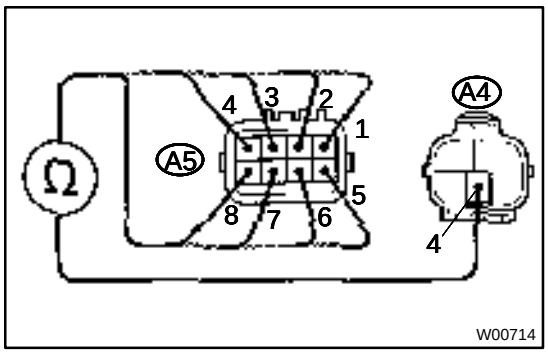

PREPARATION:
Disconnect the 2 connectors from ABS actuator.
CHECK:
Check continuity between terminals A4 – 4 and A5 – 1, 2, 3, 4, 5, 6, 7, 8 of ABS actuator connector.
OK:

Continuity

HINT:
Resistance of each solenoid coil is 1.2 Ω.

NG → **Replace ABS actuator.**

OK

2	**Check for open and short circuit in harness and connector between ABS ECU and actuator (See page IN–31).**

NG → **Repair or replace harness or connector.**

OK

If the same code is still output after the DTC is deleted, check the contact condition of each connection.
If the connections are normal, the ECU may be defective.

DI1JM–02

DTC	31, 32, 33, 34	Speed Sensor Circuit

CIRCUIT DESCRIPTION

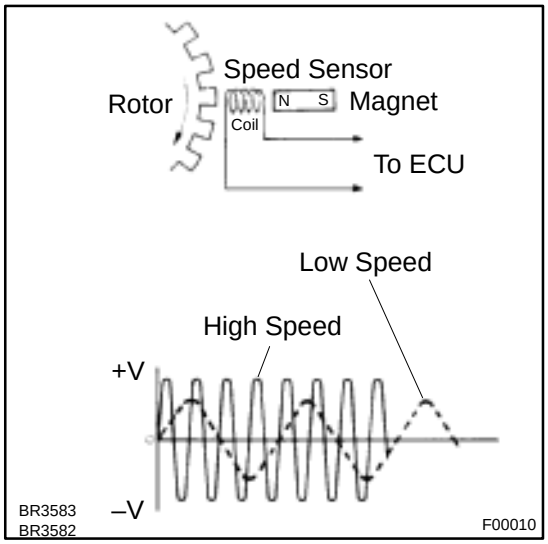

The speed sensor detects wheel speed and sends the appropriate signals to the ECU. These signals are used to control the ABS system. The front and rear rotors each have 48 serrations.
When the rotors rotate, the magnetic field emitted by the permanent magnet in the speed sensor generates an AC voltage. Since the frequency of this AC voltage changes in direct proportion to the speed of the rotor, the frequency is used by the ECU to detect the speed of each wheel.

DTC No.	DTC Detecting Condition	Trouble Area
31, 32, 33, 34	Detection of any of conditions from 1. through 4.: 1. Vehicle speed is at 10 km/h (6 mph) or more and the speed sensor signal circuit is open or short circuit continues for 15 sec. or more. 2. Momentary interruption of the speed sensor signal occurs 7 times or more. 3. Vehicle speed is at 20 km/h (12mph) or more and interference on the speed sensor signal continues for 5 sec. or more. 4. Open circuit condition of the speed sensor signal circuit continues for 0.5 sec. or more.	●Right front, left front, right rear, left rear speed sensor ●Each speed sensor circuit ●Speed sensor rotor

HINT:

- DTC No. 31 is for the right front speed sensor.
- DTC No. 32 is for the left front speed sensor.
- DTC No. 33 is for the right rear speed sensor.
- DTC No. 34 is for the left rear speed sensor.

Fail safe function:
If trouble occurs in the speed sensor circuit, the ECU cuts off current to the ABS solenoid relay and prohibits ABS control.

WIRING DIAGRAM

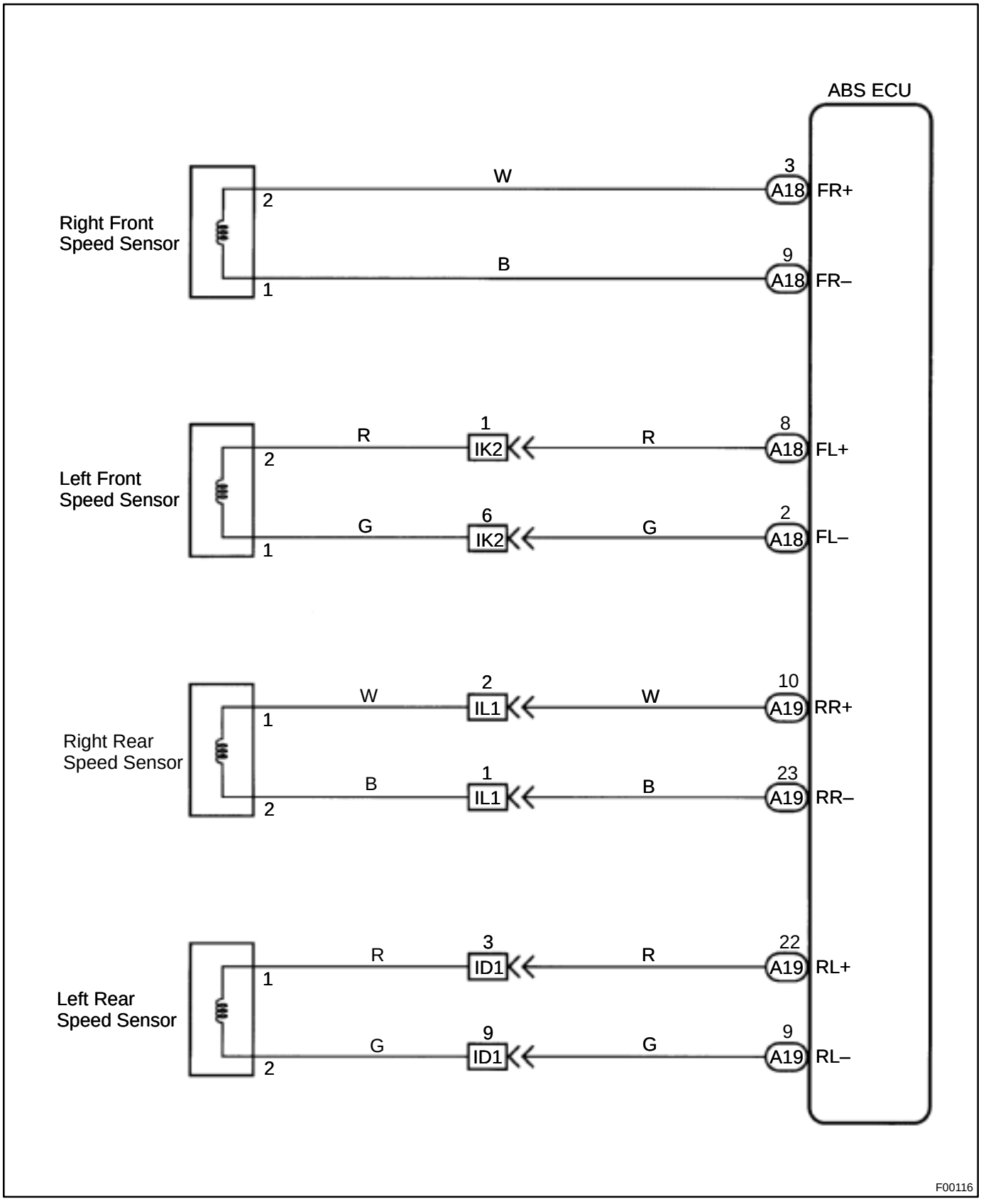

INSPECTION PROCEDURE

1	**Check speed sensor.**

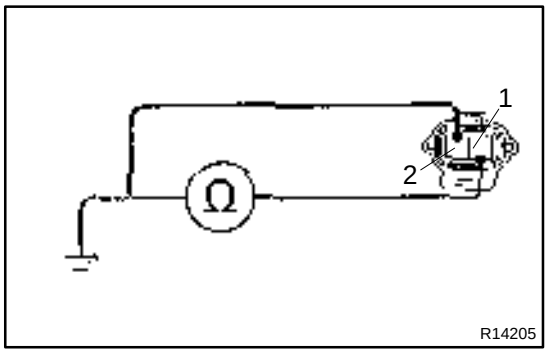

Front:

PREPARATION:

(a) Remove the front fender liner.

(b) Disconnect the speed sensor connector.

CHECK:

Measure resistance between terminals 1 and 2 of speed sensor connector.

OK:

Resistance: 0.6 – 2.5 kΩ

CHECK:

Measure resistance between terminals 1 and 2 of speed sensor connector and body ground.

OK:

Resistance: 1 MΩ or higher

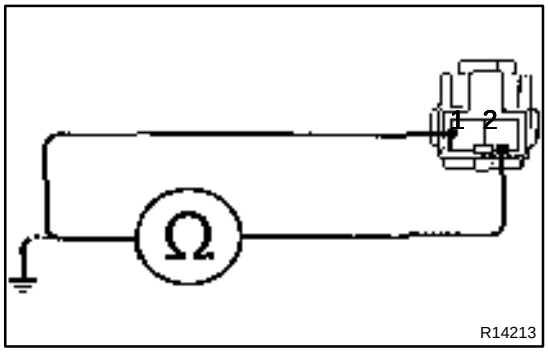

Rear:

PREPARATION:

(a) Remove the seat cushion and side seatback.

(b) Disconnect the speed sensor connector.

CHECK:

Measure resistance between terminals 1 and 2 of speed sensor connector.

OK:

Resistance: 1.2 – 2.3 kΩ

CHECK:

Measure resistance between terminals 1 and 2 of speed sensor connector and body ground.

OK:

Resistance: 1 MΩ or higher

NG	**Replace speed sensor.**

NOTICE:

Check the speed sensor signal last (See page DI–493).

OK

2	**Check for open and short circuit in harness and connector between each speed sensor and ECU (See page IN–31).**

NG → **Repair or replace harness or connector.**

OK

3	**Check speed sensor installation.**

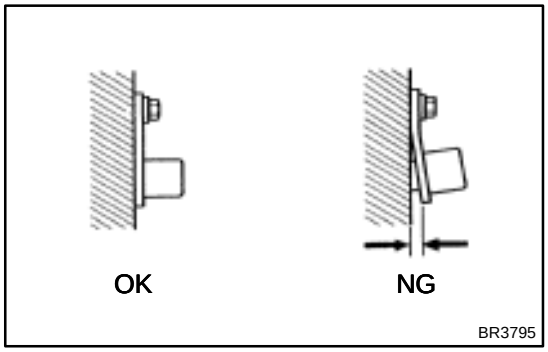

CHECK:
Check the speed sensor installation.
OK:

The installation bolt is tightened properly and there is no clearance between the sensor and steering knuckle or rear axle carrier.

NG → **Replace speed sensor.**

NOTICE:
Check the speed sensor signal last (See page DI–493).

OK

4	**Check speed sensor and sensor rotor serrations.**

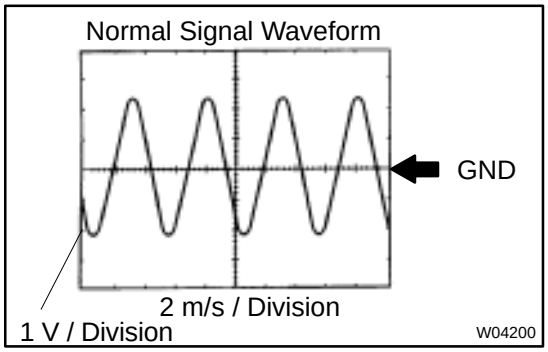

REFERENCE: INSPECTION USING OSCILLOSCOPE
PREPARATION:
(a) Remove the ABS ECU.
(b) Connect the oscilloscope to the terminals FR+, FL+, RR+ or RL+ and GND of the ABS ECU.
CHECK:
Drive the vehicle with about 30 km/h (19 mph), and check the signal waveform.

OK → **Check and replace ABS ECU.**

NG

5	Check sensor rotor and sensor tip.

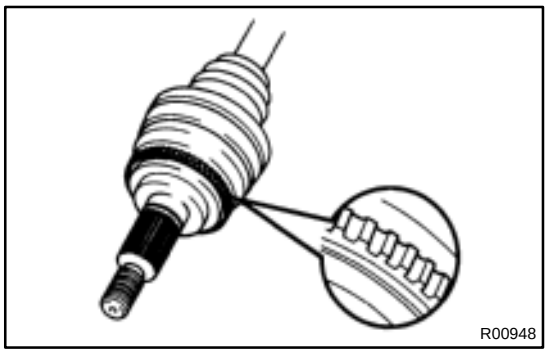

Front:

PREPARATION:

Remove the front drive shaft (See page SA–17 or SA–26).

CHECK:

Check the sensor rotor serrations.

OK:

No scratches or missing teeth or foreign objects.

PREPARATION:

Remove the front speed sensor (See page BR–68).

CHECK:

Check the sensor tip.

OK:

No scratches or foreign objects on the sensor tip.

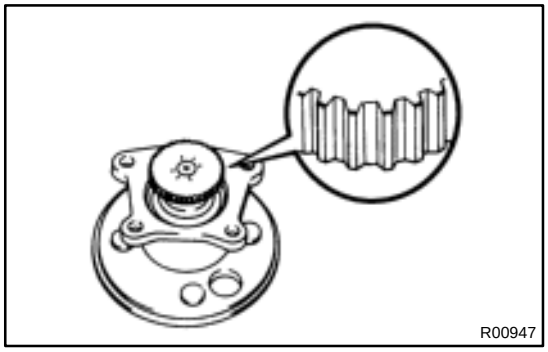

Rear:

PREPARATION:

Remove the axle hub (See page SA–52).

CHECK:

Check the sensor rotor serrations.

OK:

No scratches or missing teeth or foreign objects.

PREPARATION:

Remove the rear speed sensor (See page BR–71).

CHECK:

Check the sensor tip.

OK:

No scratches or foreign objects on the sensor tip.

NG → **Replace sensor rotor or speed sensor.**

NOTICE:

Check the speed sensor signal last (See page DI–493).

OK

Check and replace ABS ECU.

DI03L–03

DTC	33, 34	Rear Speed Sensor Rotor Faulty

CIRCUIT DESCRIPTION

DTC No.	DTC Detecting Condition	Trouble Area
33, 34	The condition that the both rear side wheels' speed is lower than the front wheels' speed at 20 km/h (12 mph) or more for 20 sec. or more when the IG switch turns ON and OFF , which is repeated in a sequence more than 8 times.	●Rear axle hub ●Right rear, left rear speed sensor ●Rear speed sensor circuit

INSPECTION PROCEDURE

1	Check rear axle hub (See page SA–9).

NG → Replace rear axle hub.

OK ↓

2	Check rear speed sensor (See page DI–514).

NG → Replace rear speed sensor.

OK ↓

3	Check for open and short circuit in harness and connector between rear speed sensor and ECU (See page IN–31).

NG → Repair or replace harness and connector.

OK ↓

Check and replace ABS ECU.

DTC	41	IG Power Source Circuit

CIRCUIT DESCRIPTION

This is the power source for the ECU, hence the actuators.

DTC No.	DTC Detecting Condition	Trouble Area
41	Condition 1. or 2. is detected: 1. Vehicle speed is at 3 km/h (1.9 mph) or more and ECU terminal IG1 voltage is 9.5 V or less , which continues for 10 sec. or more. 2. When IG1 terminal voltage is less than 9.5 V, there is open circuit in the motor relay or in the solenoid relay, or the solenoid circuit malfunction.	●Battery ●Charging system ●Power source circuit

Fail safe function:
If trouble occurs in the power source circuit, the ECU cuts off current to the ABS solenoid relay and prohibits ABS control.

WIRING DIAGRAM

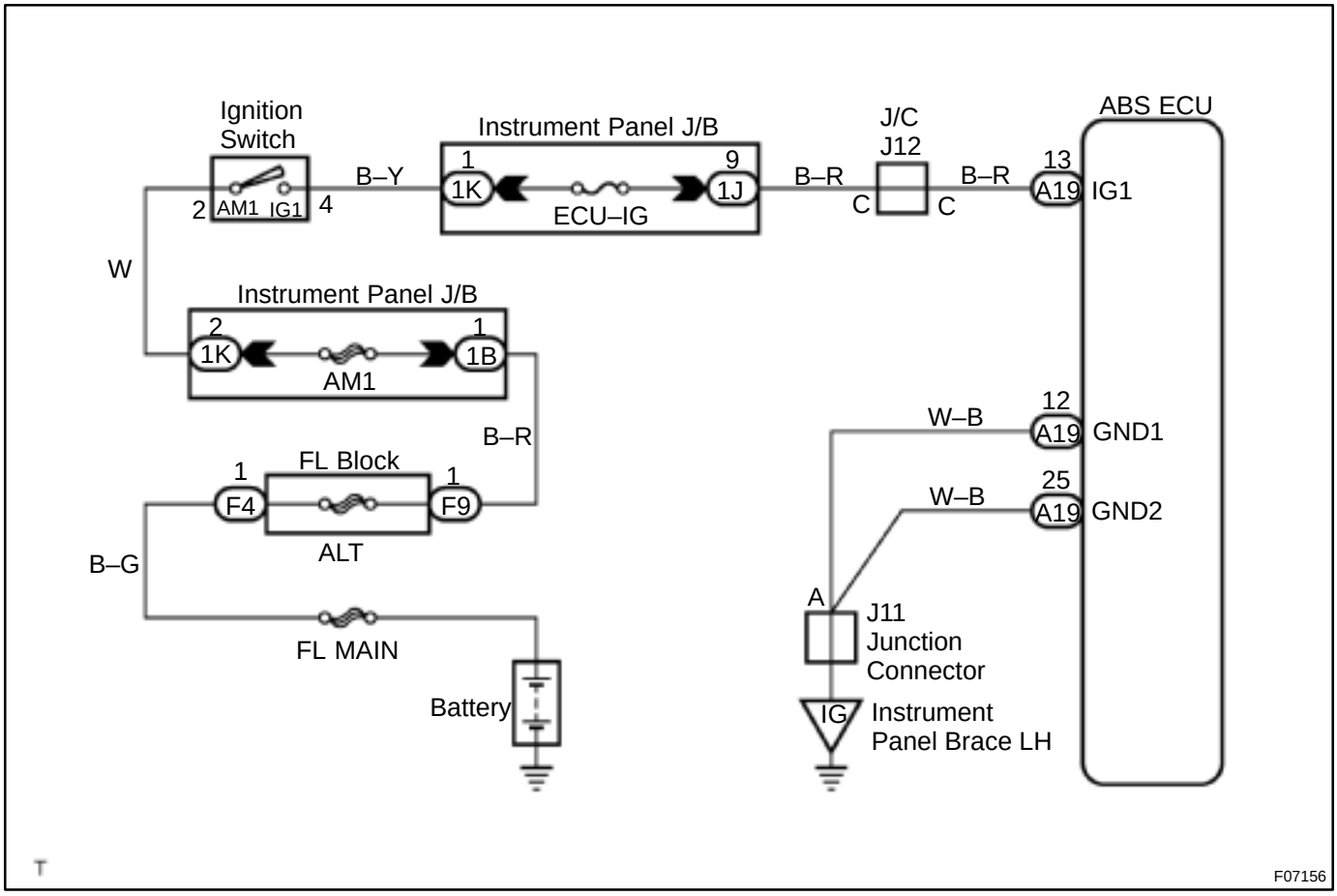

INSPECTION PROCEDURE

1	Check ECU–IG fuse.

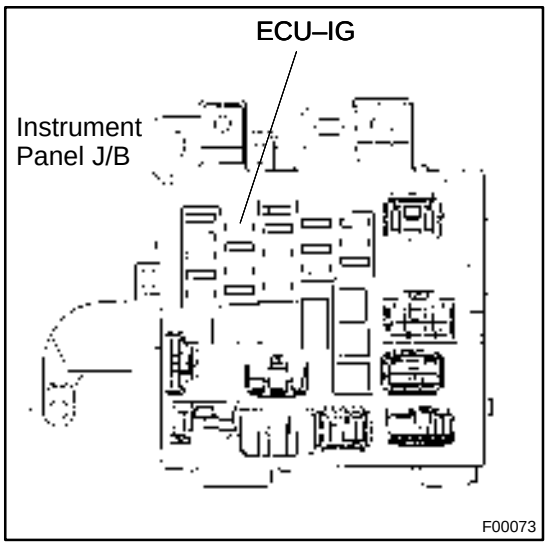

PREPARATION:
Remove ECU–IG fuse from Instrument Panel J/B.
CHECK:
Check continuity of ECU–IG fuse.
OK:
Continuity

NG → **Check for short circuit in all the harness and components connected to ECU–IG fuse (See attached wiring diagram).**

OK

2	Check battery positive voltage.

OK:
Voltage: 10 – 14 V

NG → **Check and repair the charging system
5S–FE engine: (See page CH–1)
1MZ–FE engIne: (See page CH–1).**

OK

3	Check voltage between terminals IG1 and GND of ABS ECU connector.

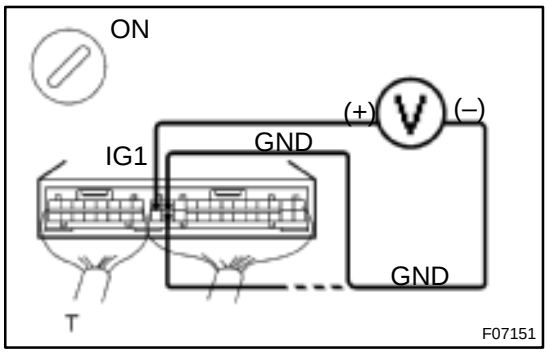

PREPARATION:
Remove ABS ECU with connectors still connected.
CHECK:
(a) Turn the ignition switch ON.
(b) Measure voltage between terminals IG1 and GND of ABS ECU connector.
OK:
Voltage: 10 – 14 V

OK	Check and replace ABS ECU.

NG

4	Check continuity between terminals GND of ABS ECU connector and body ground.

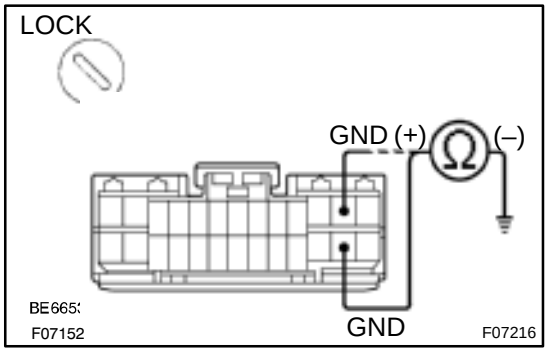

PREPARATION:
Disconnect the connector from the ABS ECU.
CHECK:
Measure resistance between terminal GND of ABS ECU connector and body ground.
OK:
Resistance: 1 Ω or less

NG	Repair or replace harness or connector.

OK

Check for open circuit in harness and connector between ABS ECU and ECU–IG fuse (See page IN–31).

DI03N–03

DTC	49	Stop Light Switch Circuit

CIRCUIT DESCRIPTION

DTC No.	DTC Detecting Condition	Trouble Area
49	ABS ECU terminal IG1 voltage is 9.5 V to 18.5 V and ABS is in non–operation, the open circuit of the stop light switch circuit continues for 0.3 sec. or more.	●Stop light switch ●Stop light switch circuit

WIRING DIAGRAM

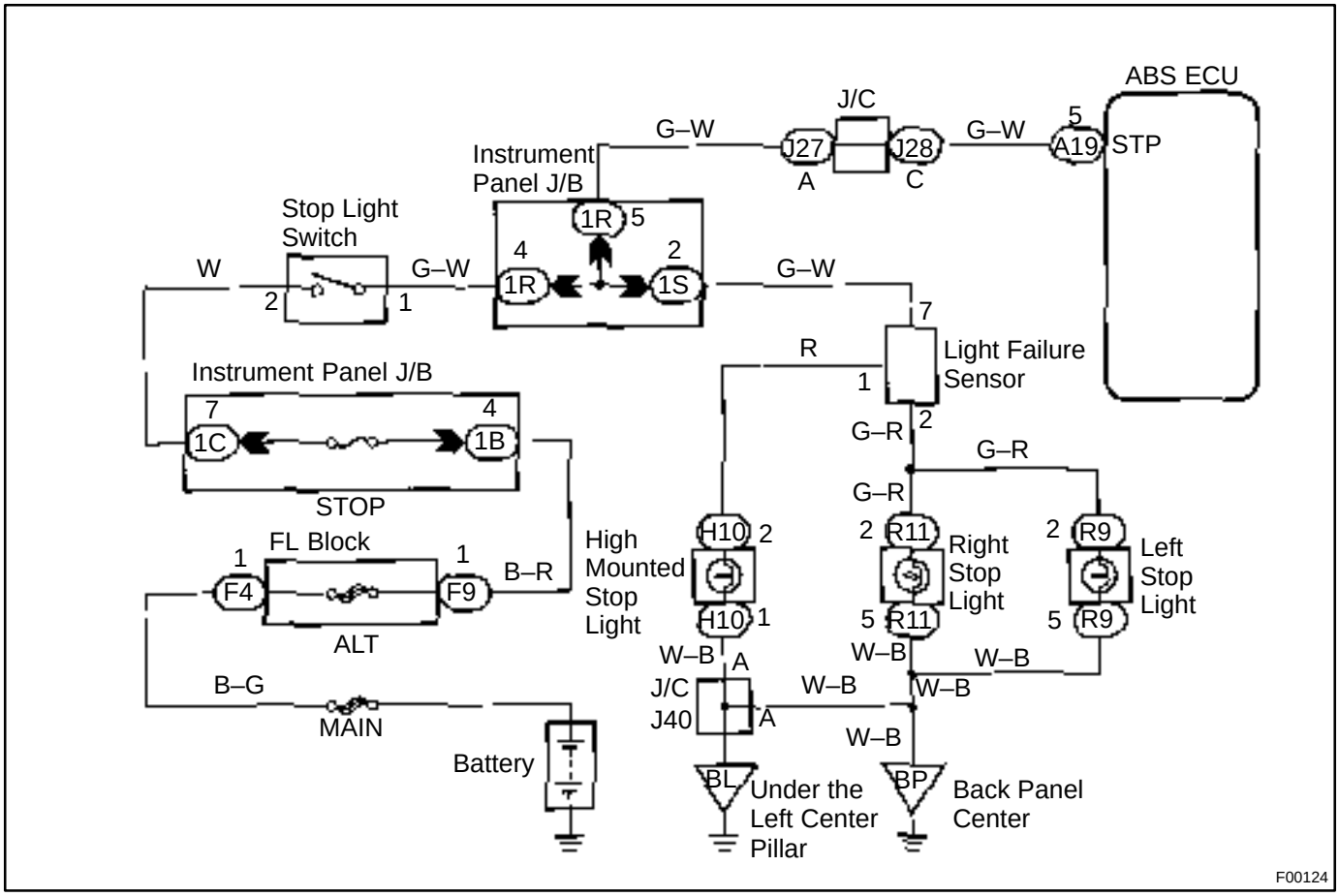

INSPECTION PROCEDURE

1	Check operation of stop light.

CHECK:

Check that stop light lights up when brake pedal is depressed and turns off when brake pedal is released.

NG → **Repair stop light circuit (See page BE–37).**

OK

2	**Check voltage between terminal STP of ABS ECU and body ground.**

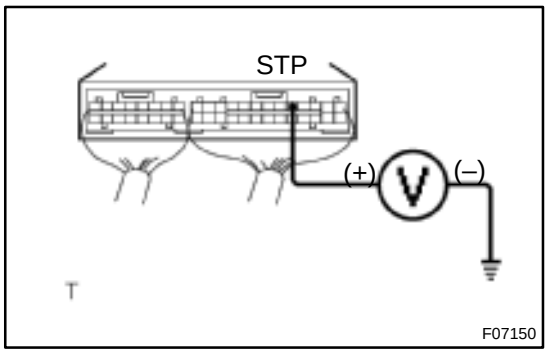

PREPARATION:
Remove ABS ECU with connectors still connected.
CHECK:
Measure voltage between terminal STP of ABS ECU and body ground when brake pedal is depressed.
OK:
Voltage: 8 – 14 V

OK	**Check and replace ABS ECU.**

NG

3	**Check for open circuit in harness and connector between ABS ECU and stop light switch (See page IN–31).**

NG	**Repair or replace harness or connector.**

OK

Proceed to next circuit inspection shown on problem symptoms table (See page DI–501).

DI4KW–01

DTC	51	ABS Pump Motor Lock

CIRCUIT DESCRIPTION

DTC No.	DTC Detecting Condition	Trouble Area
51	ABS actuator pump motor is not operating normally.	●ABS pump motor

Fail safe function:
If trouble occurs in the ABS pump motor, the ECU cuts off current to the ABS solenoid relay and prohibits ABS control.

WIRING DIAGRAM

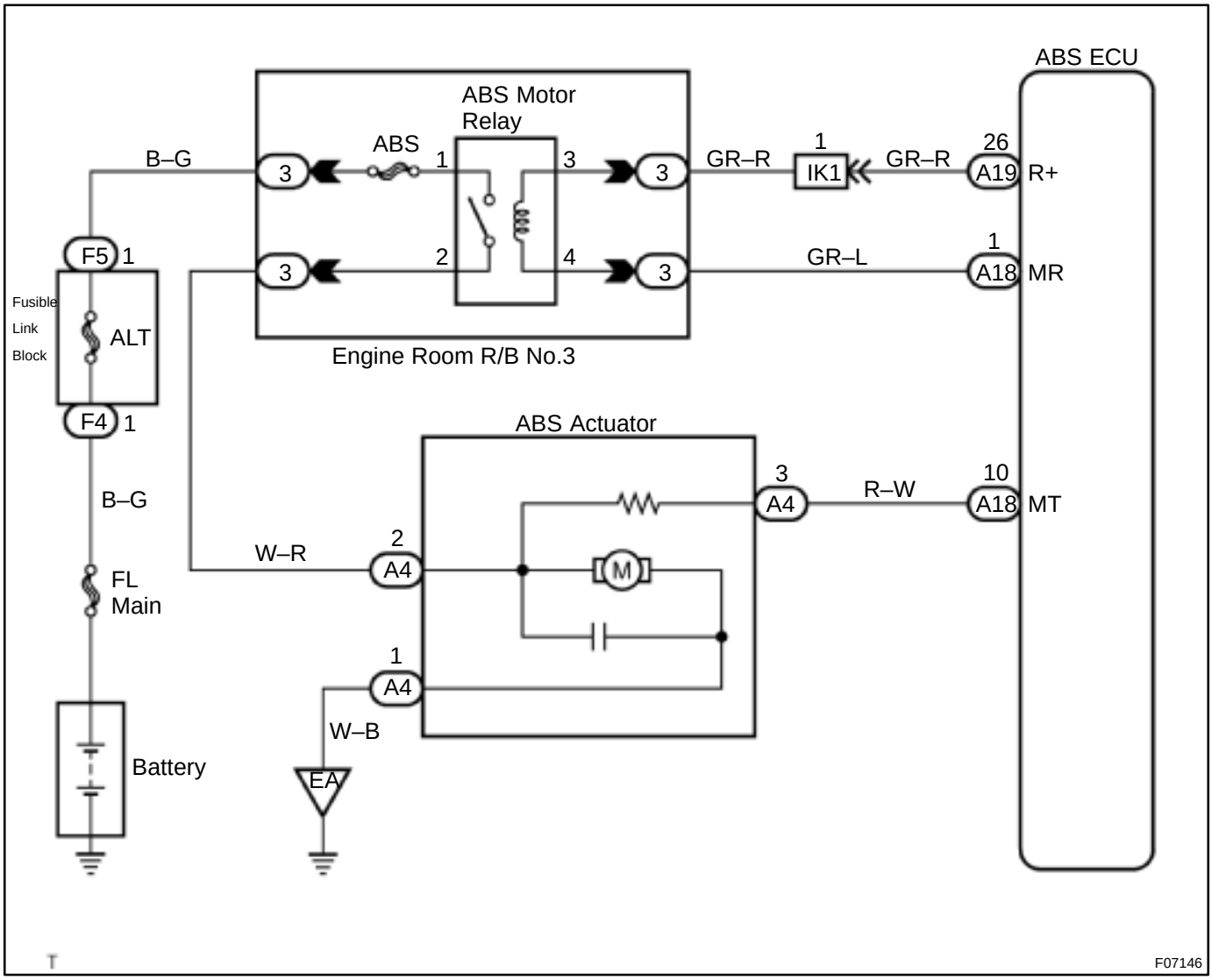

INSPECTION PROCEDURE

1	**Check operation of ABS & TRAC pump motor.**

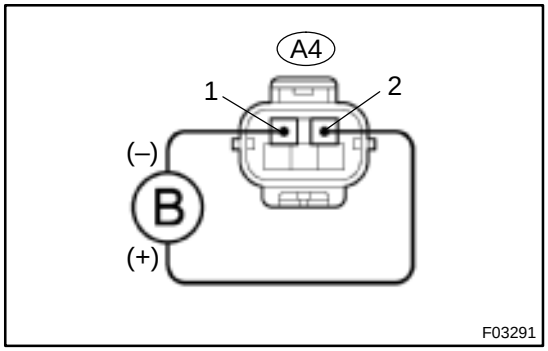

PREPARATION:

Disconnect the ABS actuator connector.

CHECK:

Connect positive ~ lead to terminal A4–2 and negative > lead to terminal A4 – 1 of the ABS actuator connector, check that the pump motor is operates.

OK:

The running sound of the pump motor should be heard.

OK → **Check for open circuit in harness and connector between ABS motor relay, ABS actuator and ABS ECU (See page IN–31).**

NG

Replace ABS actuator.

DI03P–04

DTC	Always ON	ABS ECU Malfunction

CIRCUIT DESCRIPTION

DTC No.	DTC Detecting Condition	Trouble Area
Always ON	ABS ECU internal malfunction is detected.	●ECU ●Battery

Fail safe function:
If trouble occurs in the power source circuit, the ECU cuts off current to the ABS solenoid relay and prohibits ABS control.

INSPECTION PROCEDURE

1	**Is DTC output?**

Check DTC on page DI–493.

YES → **Repair circuit indicated by the code output.**

NO

2	**Is normal code displayed?**

YES → **Check ABS solenoid relay. Check for short circuit in harness and connector between ABS solenoid relay and DLC1 (See page IN–31).**

NO

3	**Is ABS warning light go off?**

YES → **Check for open or short circuit in harness and connector between ECU–IG fuse and ABS ECU (See page IN–31).**

NO

4	**Check battery positive voltage.**

CHECK:

Check the battery positive voltage.

OK:

10 – 14 V

NG → **Check and repair the charging system**
5S–FE engine: (See page CH–1)
1MZ–FE engine: (See page CH–1).

OK

5	**Check ABS warning light.**

PREPARATION:

(a) Disconnect the connector from the ABS ECU.

(b) Turn the ignition switch ON.

CHECK:

Check the ABS warning light goes off.

OK → **Check and replace ABS ECU.**

NG

Check for short circuit in harness and connector between ABS warning light, DLC1, DLC2, and ABS ECU (See page IN–31).

DI03Q–03

ABS Warning Light Circuit

CIRCUIT DESCRIPTION

If the ECU detects trouble, it lights the ABS warning light while at the same time prohibiting ABS control. At this time, the ECU records a DTC in memory.
After removing the short pin of the DLC1, connect terminals Tc and E_1 of the DLC1 or DLC2 to make the ABS warning light blink and output the DTC.

WIRING DIAGRAM

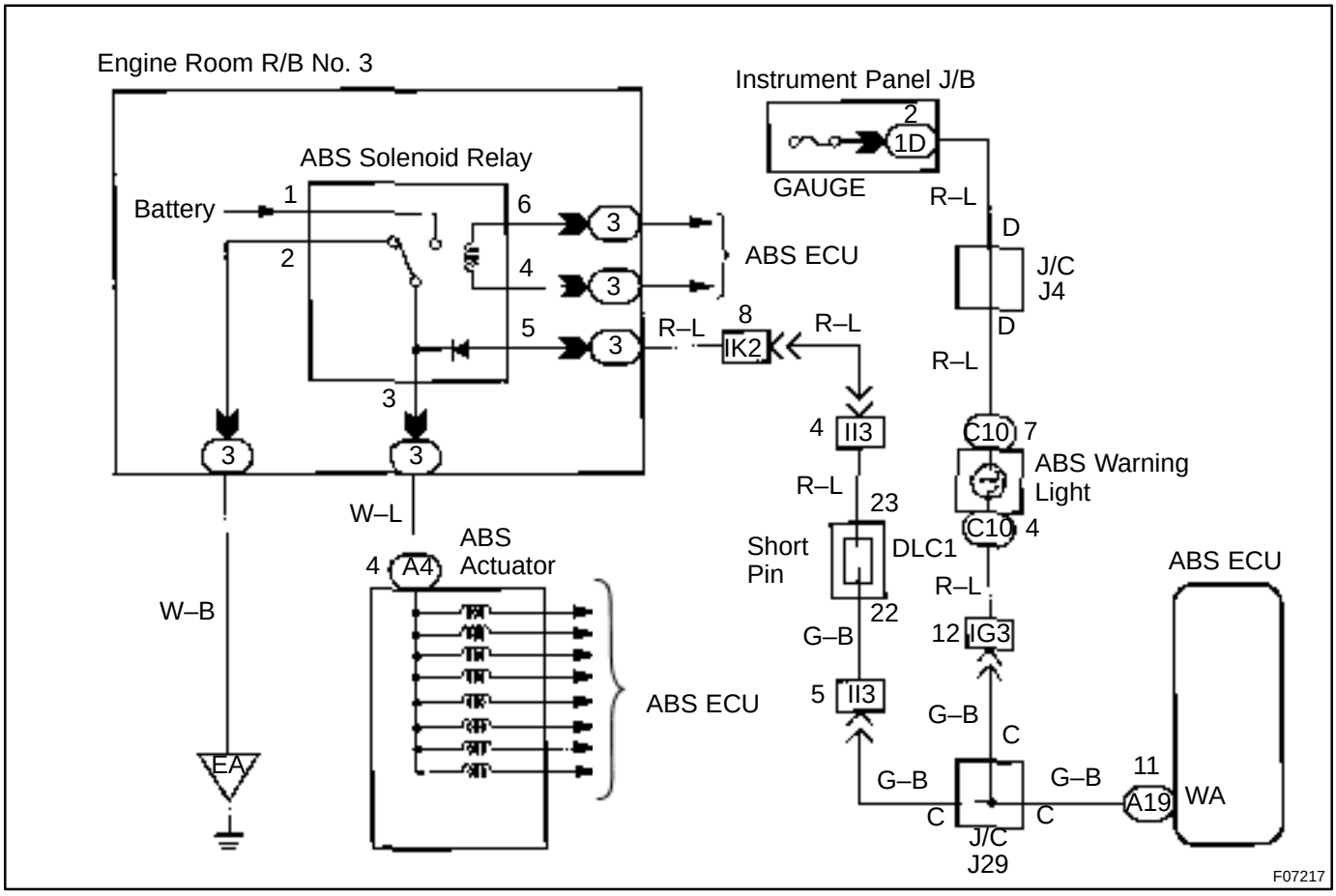

INSPECTION PROCEDURE

Troubleshooting in accordance with the chart below for each trouble symptom.

ABS warning light does not light up	Go to step 1
ABS warning light remains on	Go to step 3

1	**Check ABS warning light.**

See combination meter troubleshooting on page BE–2.

NG → **Repair bulb or combination meter assembly.**

OK

2	Check ABS solenoid relay.

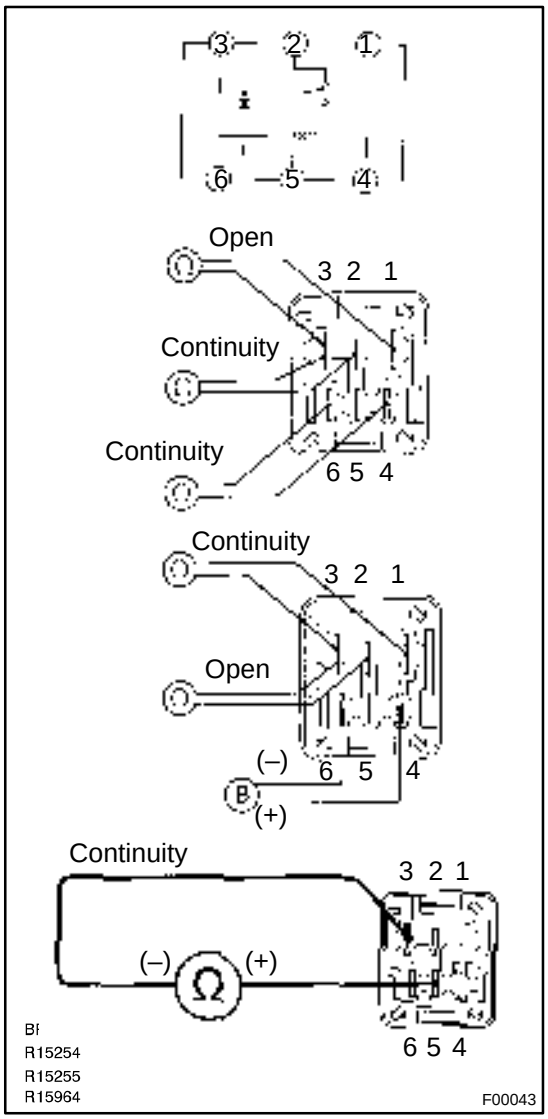

PREPARATION:

Remove ABS solenoid relay from Engine Room R/B No. 3.

CHECK:

Check continuity between each terminal of ABS solenoid relay.

OK:

Terminals 4 and 6	Continuity (Reference value 80 Ω)
Terminals 2 and 3	Continuity
Terminals 1 and 3	Open

CHECK:

(a) Apply battery positive voltage between terminals 4 and 6.

(b) Check continuity between each terminal of ABS solenoid relay.

OK:

Terminals 2 and 3	Open
Terminals 1 and 3	Continuity

CHECK:

Connect the ~ test lead to terminal 5 and the > lead to terminal 3. Check continuity between the terminals.

OK:

Continuity

If there is no continuity, connect the > test lead to terminal 5 and the ~ lead to terminal 3. Recheck continuity between terminals.

NG → **Replace ABS solenoid relay.**

OK →

Check for open circuit in harness and connector between DLC1, ABS solenoid relay and body ground (See page IN–31).

3	**Is DTC output?**

Check DTC on page DI–493.

YES → **Repair circuit indicated by the code output.**

NO

4	**Does ABS warning light go off if short pin is removed?**

NO → **Check for short circuit in harness and connector between ABS warning light, DLC1 and ABS ECU (See page IN–31).**

YES

5	**Check ABS solenoid relay (See step 2).**

NG → **Replace ABS solenoid relay.**

OK

Check for short circuit in harness and connector between DLC1 and ABS solenoid relay (See page IN–31).

Tc Terminal Circuit

CIRCUIT DESCRIPTION

Connecting between terminals Tc and E_1 of the DLC1 or the DLC2 causes the ECU to display the DTC by flashing the ABS warning light.

WIRING DIAGRAM

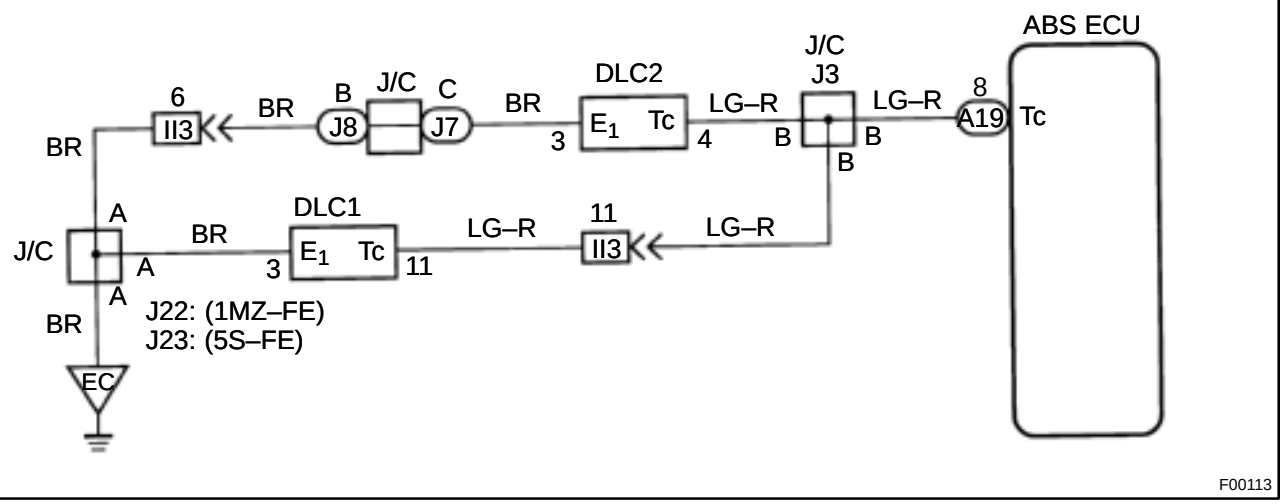

INSPECTION PROCEDURE

1	**Check voltage between terminals Tc and E_1 of DLC2 or DLC1.**

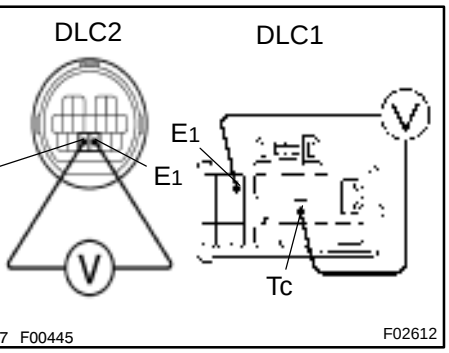

CHECK:

(a) Turn the ignition switch ON.

(b) Measure voltage between terminals Tc and E_1 of DLC2 or DLC1.

OK:

Voltage: 10 – 14 V

OK	**If ABS warning light does not blink even after Tc and E_1 are connected, the ECU may be defective.**

NG

2	**Check for open and short circuit in harness and connector between ABS ECU and DLC2 or DLC1, DLC2 or DLC1 and body ground (See page IN–31).**

NG → **Repair or replace harness or connector.**

OK

Check and replace ABS ECU.

Ts Terminal Circuit

CIRCUIT DESCRIPTION

The sensor check circuit detects abnormalities in the speed sensor signal which cannot be detected with the DTC check.
Connecting terminals Ts and E_1 of the DLC1 in the engine compartment starts the check.

WIRING DIAGRAM

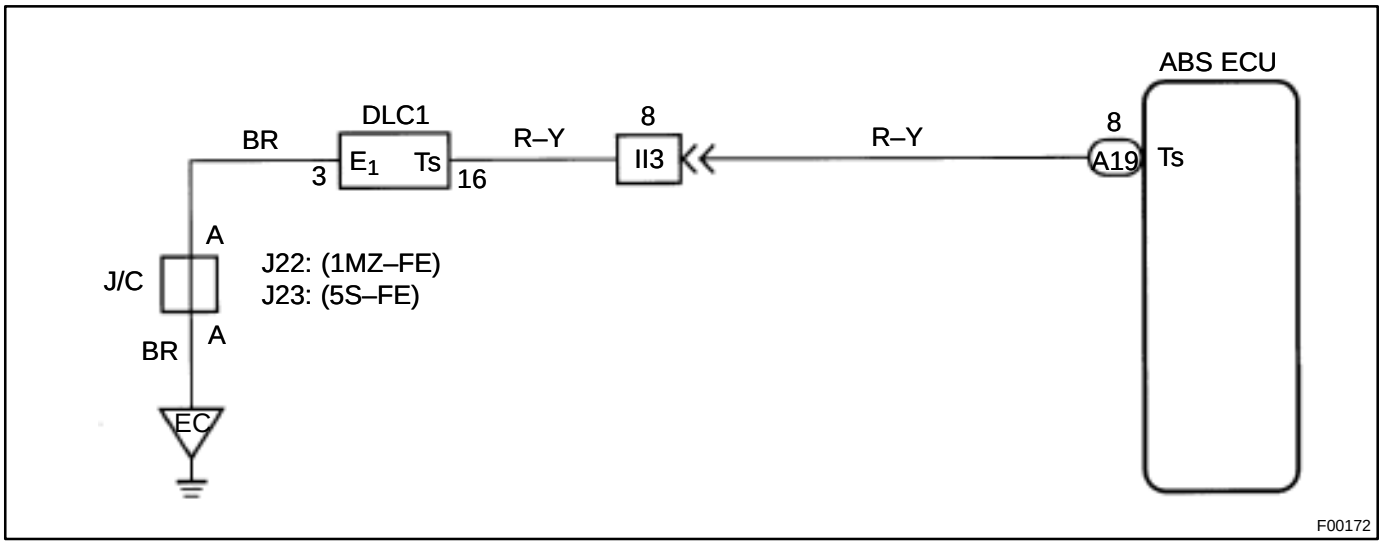

INSPECTION PROCEDURE

1	**Check voltage between terminals Ts and E_1 of DLC1.**

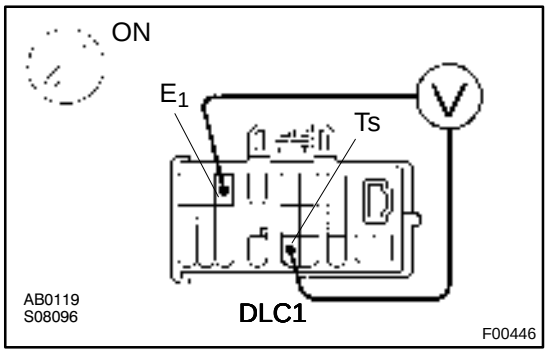

CHECK:

(a) Turn the ignition switch ON.
(b) Measure voltage between terminals Ts and E_1 of DLC1.

OK:

Voltage: 10 – 14 V

OK	**If ABS warning light does not blink even after Ts and E_1 are connected, the ECU may be defective.**

NG

2	**Check for open and short circuit in harness and connector between ABS ECU and DLC1, DLC1 and body ground (See page IN–31).**

NG → **Repair or replace harness or connector.**

OK

Check and replace ABS ECU.

DI03T–03

Check for Fluid Leakage

Check for fluid leakage from actuator or hydraulic lines.

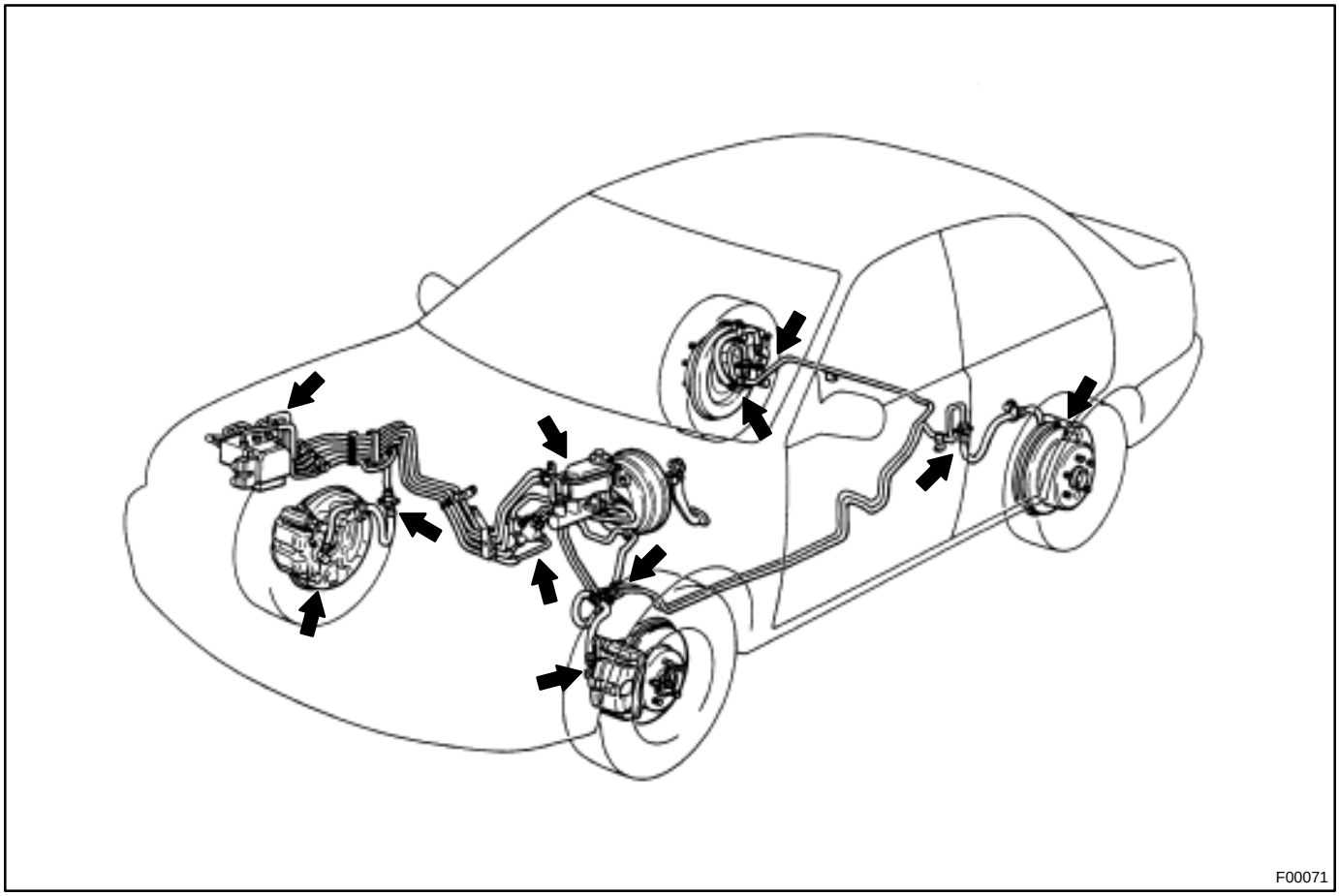

F00071

ANTI–LOCK BRAKE SYSTEM (BOSCH Made)

HOW TO PROCEED WITH TROUBLESHOOTING

DI051–04

Troubleshoot in accordance with the procedure on the following pages.

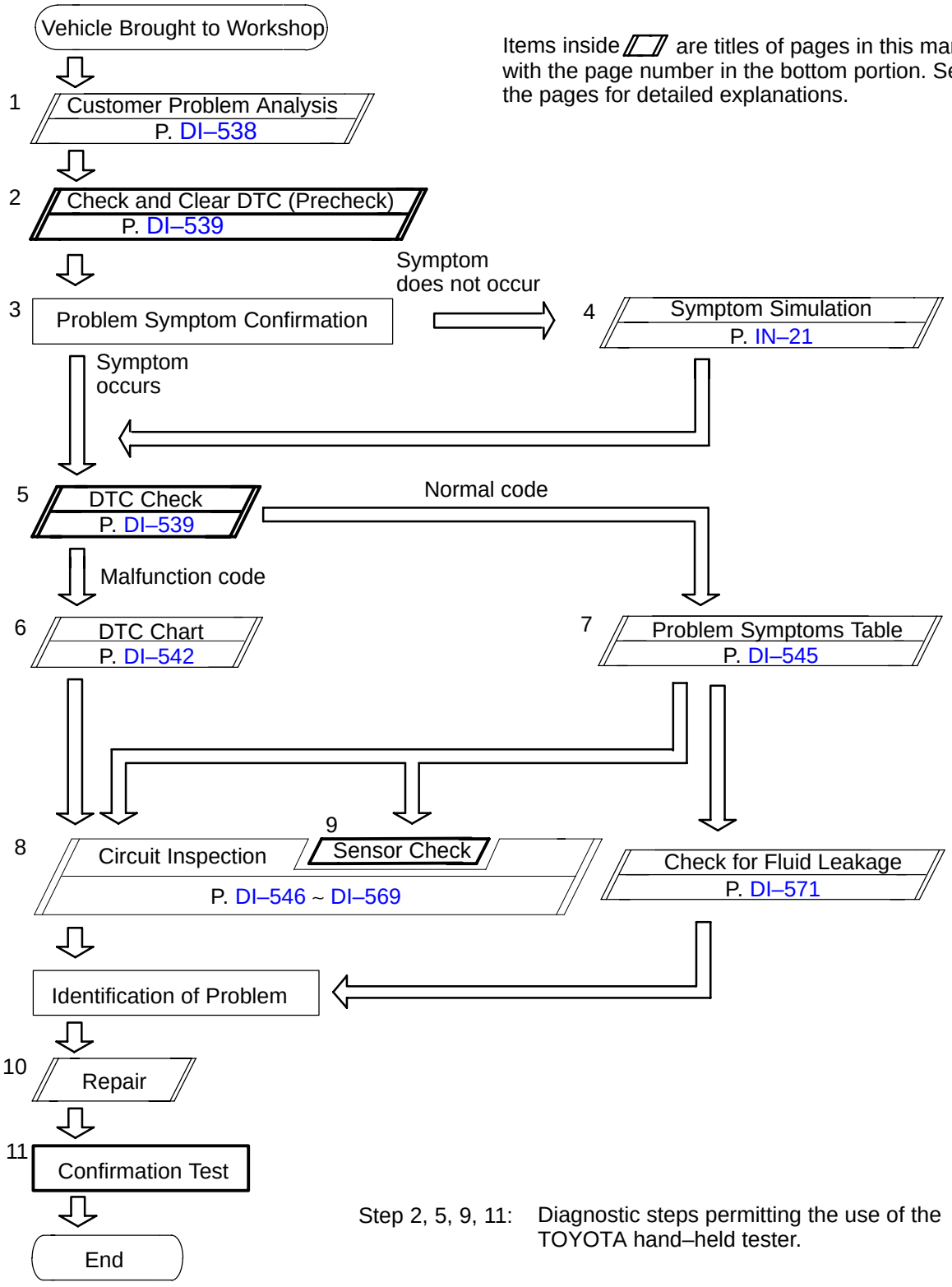

Items inside ▱ are titles of pages in this manual, with the page number in the bottom portion. See the pages for detailed explanations.

Step 2, 5, 9, 11: Diagnostic steps permitting the use of the TOYOTA hand–held tester.

DI03U–04

CUSTOMER PROBLEM ANALYSIS CHECK

ABS Check Sheet

Inspector's Name :

Customer's Name		**Registration No.**	
		Registration Year	/ /
		Frame No.	
Date Vehicle Brought In	/ /	**Odometer Reading**	km miles

Date Problem First Occurred	/ /
Frequency Problem Occurs	☐ Continuous ☐ Intermittent (times a day)

Symptoms	☐ ABS does not operate.	
	☐ ABS does not operate intermittently.	
	ABS Warning Light Abnormal	☐ Remains ON ☐ Does not Light Up

DTC Check	**1st Time**	☐ Normal Code ☐ Malfunction Code (Code)
	2nd Time	☐ Normal Code ☐ Malfunction Code (Code)

DI03V–04

PRE–CHECK

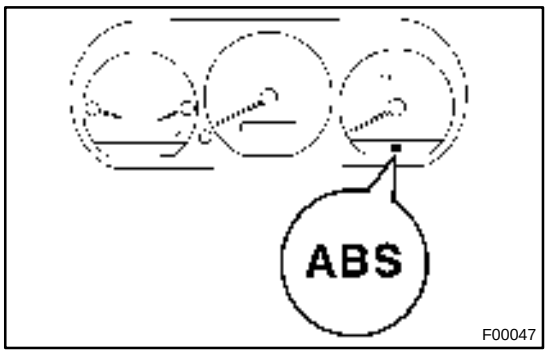

1. DIAGNOSIS SYSTEM

(a) Check the indicator.

When the ignition switch is turned ON, check that the ABS warning light goes on for 2 seconds.

HINT:

If the indicator check result is not normal, proceed to trouble-shooting for the ABS warning light circuit (See page DI–565).

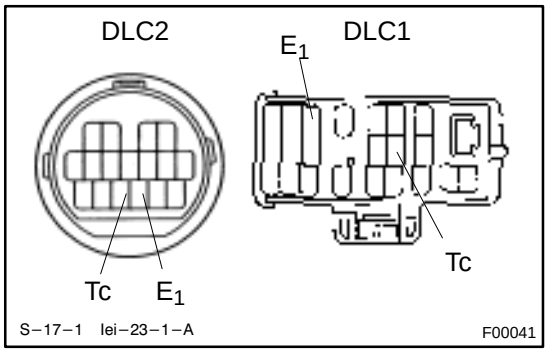

(b) Check the DTC.

(1) Using SST, connect terminals Tc and E_1 of DLC2 or DLC1.

SST 09843 – 18020

(2) Turn the ignition switch ON.

(3) Read the DTC from the ABS warning light on the combination meter.

HINT:

- If no code appears, inspect the diagnostic circuit or ABS warning light circuit (See page DI–567 or DI–565).
- As an example, the blinking patterns for normal code and codes 11 and 21 are shown on the left.

(4) Codes are explained in the code table on page DI–542.

(5) After completing the check, disconnect terminals Tc and E_1, and turn off the display.

If 2 or more malfunctions are indicated at the same time the lowest numbered DTC will be displayed 1st.

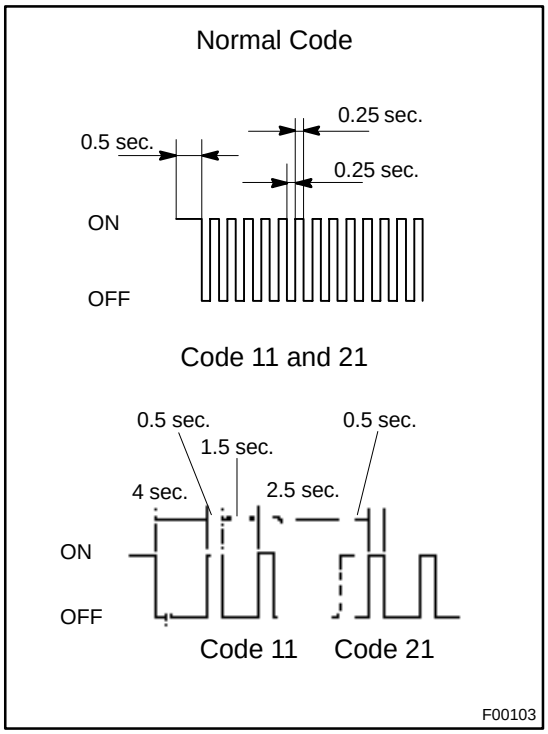

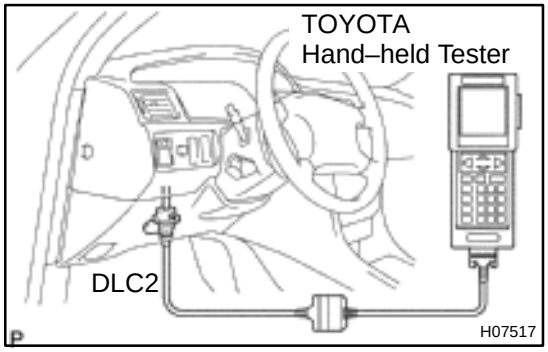

(c) Using TOYOTA hand–held tester, check the DTC.

(1) Hook up the TOYOTA hand–held tester to the DLC2.

(2) Read the DTC by following the prompts on the tester screen.

Please refer to the TOYOTA hand–held tester operator's manual for further details.

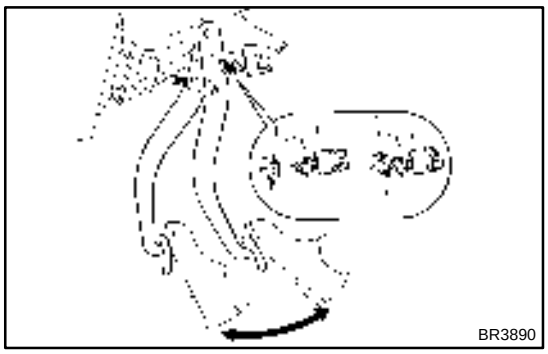
BR3890

(d) Clear the DTC.
(1) Using SST, connect terminals Tc and E_1 of DLC2 or DLC1.
SST 09843 – 18020
(2) Turn the ignition switch ON.
(3) Clear the DTC stored in ECU by depressing the brake pedal 8 or more times within 3 seconds.
(4) Check that the warning light shows the normal code.
(5) Remove the SST from the terminals of DLC2 or DLC1.
SST 09843 – 18020

HINT:
Cancellation cannot be done by removing the battery cable or ECU–B fuse.

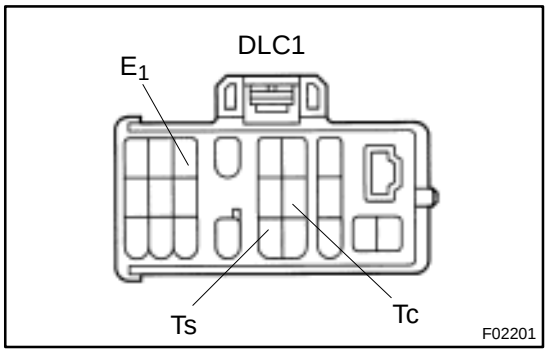

F02201

2. SPEED SENSOR SIGNAL

(a) Check the speed sensor signal.
(1) When the ignition switch is turned ON, check that the ABS warning light goes on for 2 seconds.
(2) Turn the ignition switch OFF.
(3) Using SST, connect terminals Ts and E_1 of DLC1.
SST 09843 – 18020
(4) Start the engine.

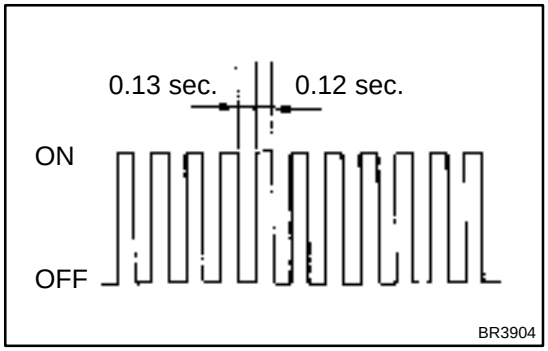

BR3904

(5) Check that the ABS warning light blinks.

HINT:
If the ABS warning light does not blink, inspect the ABS warning light circuit (See page DI–565).

(6) Drive vehicle straight forward.

HINT:
Drive vehicle at 45 – 55 km/h (28 – 34 mph) for several seconds. If the brake is applied during the check, the check routine must be started again.

(7) Stop the vehicle.
(8) Turn the ignition switch OFF.
(9) Disconnect the SST from terminals Ts and E_1 and, connect the SST to terminals Tc and E_1 of DLC1.
SST 09843 – 18020
(10) Turn the ignition switch ON.
(11) Read the number of blinks of the ABS warning light.

HINT:

- See the list of DTC shown at the bottom of this page.
- If every sensor is normal, a normal code is output (A cycle of 0.25 sec. ON and 0.25 sec. OFF is repeated).
- If 2 or more malfunctions are indicated at the same time, the lowest numbered code will be displayed 1st.

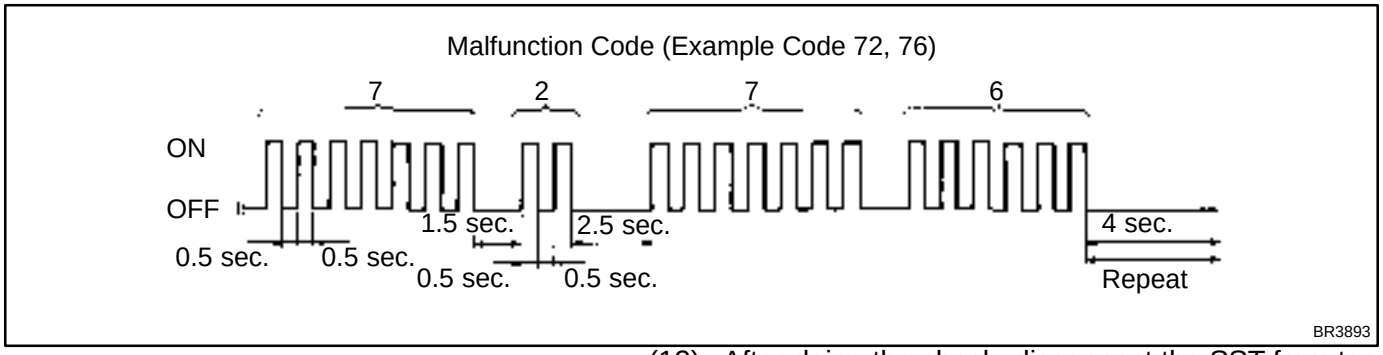

(12) After doing the check, disconnect the SST from terminals Tc and E_1 of DLC1, and turn ignition switch OFF.

SST 09843 – 18020

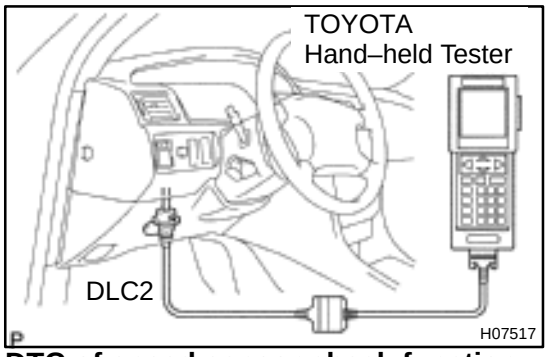

(b) Using TOYOTA hand–held tester, check the DTC.

(1) Do step 1. ~ 6. on the previous page.

(2) Hook up the TOYOTA hand–held tester to the DLC2.

(3) Read the DTC by following the prompts on the tester screen.

Please refer to the TOYOTA hand–held tester operator's manual for further details.

DTC of speed sensor check function:

Code No.	Diagnosis	Trouble Area
71	Low output voltage of right front speed sensor	●Right front speed sensor ●Sensor installation ●Right front speed sensor rotor
72	Low output voltage of left front speed sensor	●Left front speed sensor ●Sensor installation ●Left front speed sensor rotor
73	Low output voltage of right rear speed sensor	Right rear speed sensor Sensor installation Right rear speed sensor rotor
74	Low output voltage of left rear speed sensor	●Left rear speed sensor ●Sensor installation ●Left rear speed sensor rotor
75	Abnormal change in output voltage of right front speed sensor	●Right front speed sensor rotor
76	Abnormal change in output voltage of left front speed sensor	●Left front speed sensor rotor
77	Abnormal change in output voltage of right rear speed sensor	●Right rear speed sensor rotor
78	Abnormal change in output voltage of left rear speed sensor	●Left rear speed sensor rotor

DI03W–11

DIAGNOSTIC TROUBLE CODE CHART

HINT:

- Using SST 09843 –18020, connect the terminals Tc and E_1.
- If a malfunction code is displayed during the DTC check, check the circuit listed for the code. For details of each code, turn to the page referred to under the ”See page” for respective ”DTC No.” in the DTC chart.

DTC No. (See Page)	Detection Item	Trouble Area
11 (DI–546)	ABS solenoid valve relay faulty	●ABS solenoid valve relay ●Valve supply voltage ●ECU
13 (DI–548)	ABS pump motor faulty	●ABS motor relay ●Pump motor voltage ●Pump motor lead disconnected ●ECU
21 (DI–550)	Right front solenoid valves faulty	●ABS actuator (right front inlet or outlet solenoid valve)
22 (DI–550)	Left front solenoid valves faulty	●ABS actuator (left front inlet or outlet solenoid valve)
23 (DI–550)	Right rear solenoid valves faulty	●ABS actuator (right rear inlet or outlet solenoid valve)
24 (DI–550)	Left rear solenoid valves faulty	●ABS actuator (left rear inlet or outlet solenoid valve)
31 (DI–552)	Right front wheel speed sensor signal malfunction	●Right front, left front, right rear and left rear speed sensor ●Each speed sensor circuit ●Sensor installation ●ECU
32 (DI–552)	Left front wheel speed sensor signal malfunction	
33 (DI–552)	Right rear wheel speed sensor signal malfunction	
34 (DI–552)	Left rear wheel speed sensor signal malfunction	
35 (DI–552)	Open circuit in right front wheel speed sensor circuit	●Right front, left front speed sensor ●Each speed sensor circuit ●ECU
36 (DI–552)	Open circuit in left front wheel speed sensor circuit	
37 (DI–557)	Speed sensor rotor is wrong number of teeth on one of the 4 wheels	●Speed sensor ●Sensor rotor ●ECU
38 (DI–552)	Open circuit in right rear wheel speed sensor circuit	●Right rear, left rear speed sensor ●Each speed sensor circuit ●ECU
39 (DI–552)	Open circuit in left rear wheel speed sensor circuit	
41 (DI–558)	Low battery positive voltage	●Battery ●Charging system regulator ●Power source circuit ●ECU
58 (DI–561)	Open circuit in stop light switch circuit	●Stop light switch ●Stop light switch circuit ●ECU
62 (DI–563)	Malfunction in ECU	●ECU

DI03X–05

PARTS LOCATION

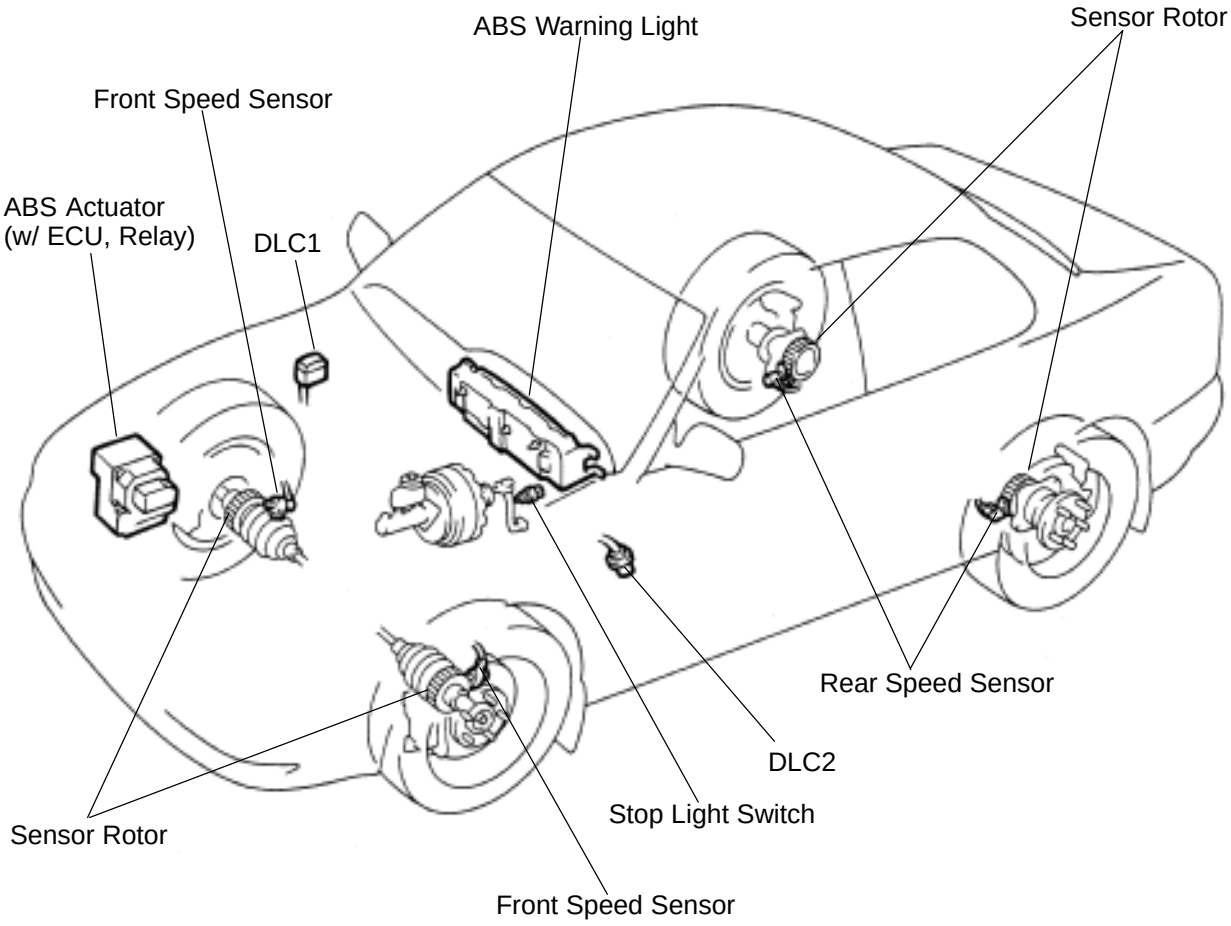

F01175

DI1JN–03

TERMINALS OF ECU

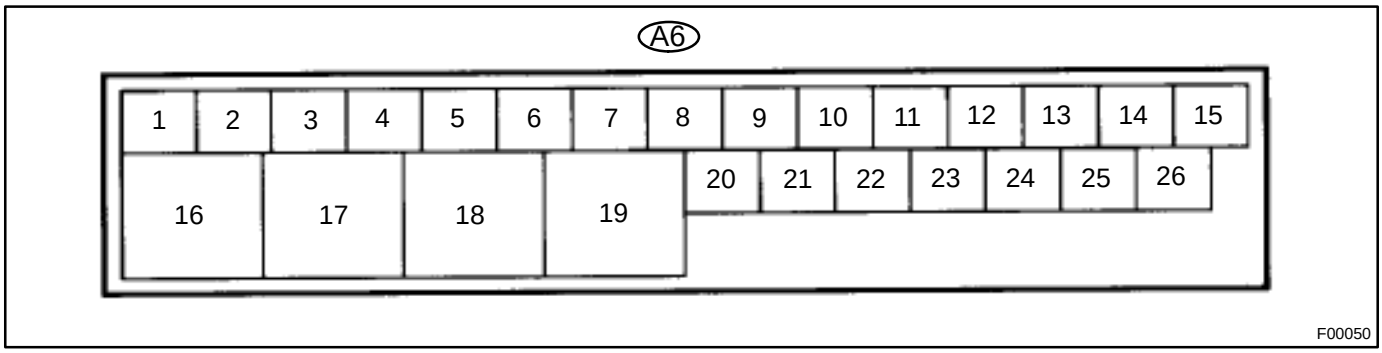

Symbols (Terminals No.)	Wiring Color	Condition	STD Voltage (V)
+B (A6 – 17, 18) – GND (A6 – 16, 19)	L ↔ W–B	Always	10 – 14
IG1 (A6 – 15) – GND (A6 – 16, 19)	B–R ↔ W–B	IG switch ON	10 – 14
WA (A6 – 21) – GND (A6 – 16, 26)	R–L ↔ W–B	IG switch ON, ABS warning light ON	Below 2.6
		IG switch ON, ABS warning light OFF	10 – 14
STP (A6 – 14) – GND (A6 – 16, 19)	G–W ↔ W–B	Stop light switch OFF	Below 1.5
		Stop light switch ON	5 – 14
Tc (A6 – 12) – GND (A6 – 16, 19)	LG–R ↔ W–B	IG switch ON	5.7 – 8.1
Ts (A6 – 11) – GND (A6 – 16, 19)	R–Y ↔ W–B	IG switch ON	5.7 – 8.1
FR+ (A6 – 5) – FR– (A6 – 4)	W ↔ B	IG switch ON, slowly turn right front wheel	AC generation
FL+ (A6 – 7) – FL– (A6 – 6)	R ↔ G	IG switch ON, slowly turn left front wheel	AC generation
RR+ (A6 – 3) – RR– (A6 – 1)	P ↔ L	IG switch ON, slowly turn right rear wheel	AC generation
RL+ (A6 – 9) RL– (A6 – 8)	Y ↔ BR	IG switch ON, slowly turn left rear wheel	AC generation

DI03Z–10

PROBLEM SYMPTOMS TABLE

If a normal code is displayed during the DTC check but the problem still occurs, check the circuits for each problem symptom in the order given in the table below and proceed to the relevant troubleshooting page.

Symptom	Suspect Area	See page
ABS does not operate	Only when 1. to 4. are all normal and the problem is still occurring, replace the ABS ECU. 1. Check the DTC reconfirming that the normal code is output. 2. Power source circuit 3. Speed sensor circuit 4. Check the hydraulic circuit for leakage.	 DI–539 DI–558 DI–552 DI–571
ABS does not operate intermittently	Only when 1. το 4. are all normal and the problem is still occurring, replace the ABS ECU. 1. Check the DTC reconfirming that the normal code is output. 2. Speed sensor circuit 3. Stop light switch circuit 4. Check the hydraulic circuit for leakage.	 DI–539 DI–552 DI–561 DI–571
ABS warning light abnormal	1. ABS warning light circuit 2. ABS ECU	DI–565 DI–563
DTC check cannot be done	Only when 1. and 2. are all normal and the problem is still occurring, replace the ABS ECU. 1. ABS warning light circuit 2. Tc terminal circuit	 DI–565 DI–567
Speed sensor signal check cannot be done	1. Ts terminal circuit 2. ABS ECU	DI–569 DI–563

DI040–08

CIRCUIT INSPECTION

DTC	11	ABS Solenoid Valve Relay Circuit

CIRCUIT DESCRIPTION

This relay supplies power to each ABS solenoid. After the ignition switch is turned ON, if the initial check is OK, the relay goes on.

DTC No.	DTC Detecting Condition	Trouble Area
11	Detection of any conditions from 1. through 3.: 1. 3 or more solenoid valves are shown faulty in response and simultaneously valve supply voltage is detected faulty. 2. Solenoid valve relay will not be switched OFF. 3. Valve relay is frozen in spite of its high valve relay supply voltage.	●ABS solenoid valve relay ●Valve supply voltage ●ECU

Fail safe function:
If trouble occurs in the ABS solenoid valve relay circuit, the ECU cuts off current to the ABS solenoid valve relay and prohibits ABS control.

WIRING DIAGRAM

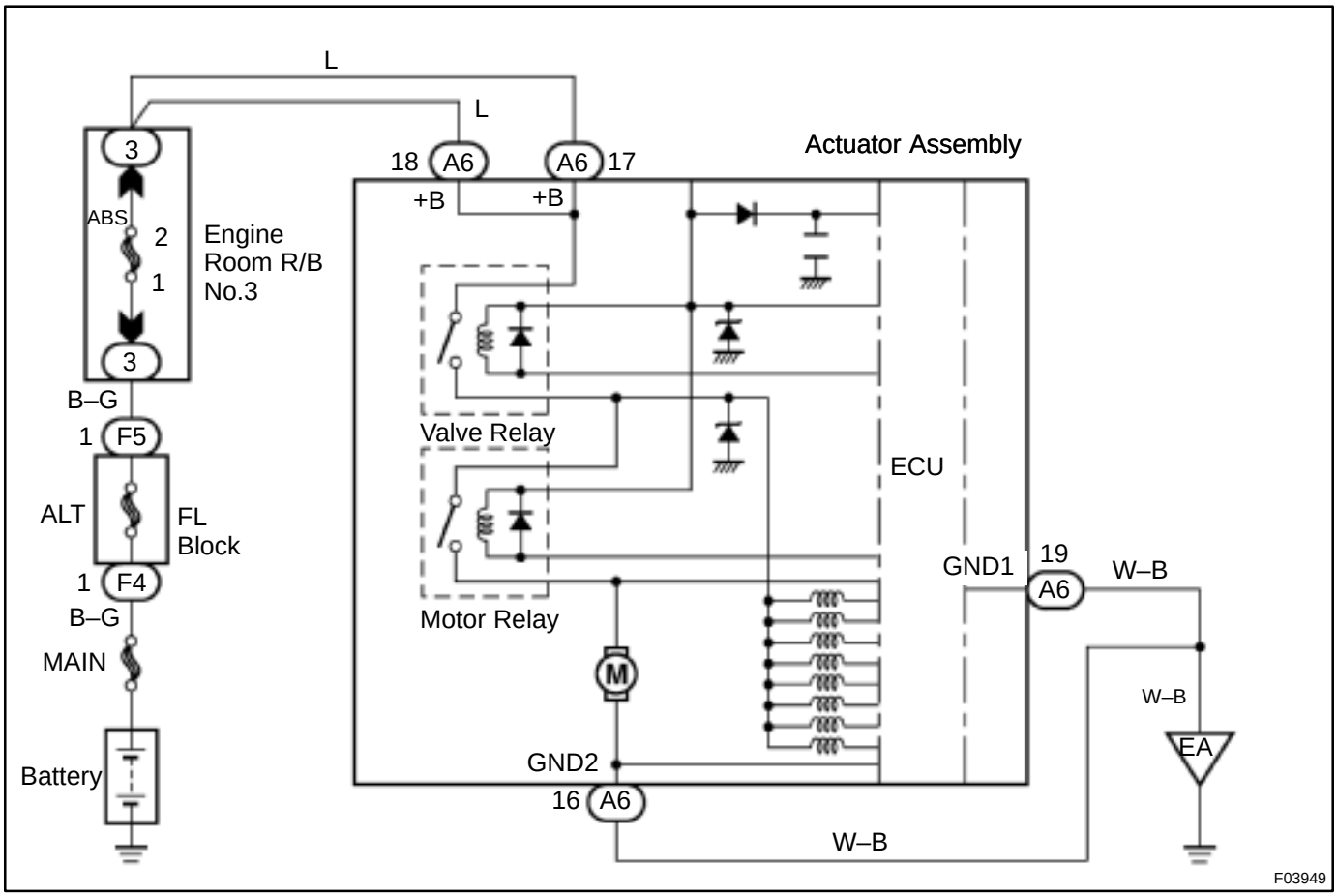

INSPECTION PROCEDURE

1	**Check voltage between terminals A6 – 17, 18 and A6 – 16, 19 of ABS actuator connector.**

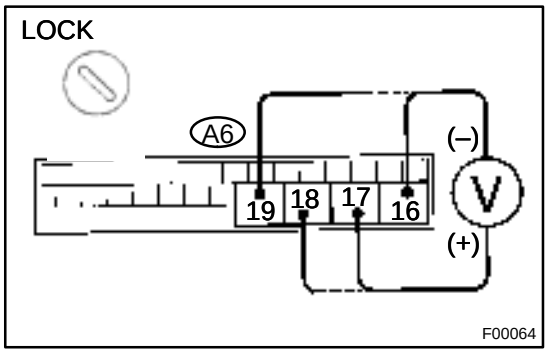

PREPARATION:
Disconnect the ABS actuator connector.
CHECK:
Measure the voltage between terminals A6 – 17, 18 and A6 – 16, 19 of ABS actuator harness side connector.
OK:

Voltage: 10 – 14 V

NG → **Check and replace fuses.**
Check and repair harness or connector.

OK

If the same code is still output after the DTC is deleted, check the contact condition of each connection.
If the connections are normal, the ECU may be defective.

DI041–08

DTC	13	Pump Motor Circuit

CIRCUIT DESCRIPTION

The ABS motor relay supplies power to the ABS pump motor. While the ABS is activated, the ECU switches the ABS motor relay ON and operates the ABS pump motor.

DTC No.	DTC Detecting Condition	Trouble Area
13	Detection of any conditions from (1) through (3): 1. After actuation of the motor relay, pump motor voltage will not be supplied within 0.4 sec. 2. Pump motor voltage is at a high level, motor relay will not actuate for 2.5 sec. or more. 3. Pump motor voltage keeps low level for longer than 0.4 sec. and the pump repeats activating for 7 sec. 3 times maximally. since the last activation, the pump motor has been gone dead because of short circuit.	●ABS motor relay ●Pump motor voltage ●Pump motor lead disconnected ●ECU

Fail safe function:
If trouble occurs in the ABS motor relay circuit, the ECU cuts off current to the ABS solenoid relay and prohibits ABS control.

WIRING DIAGRAM

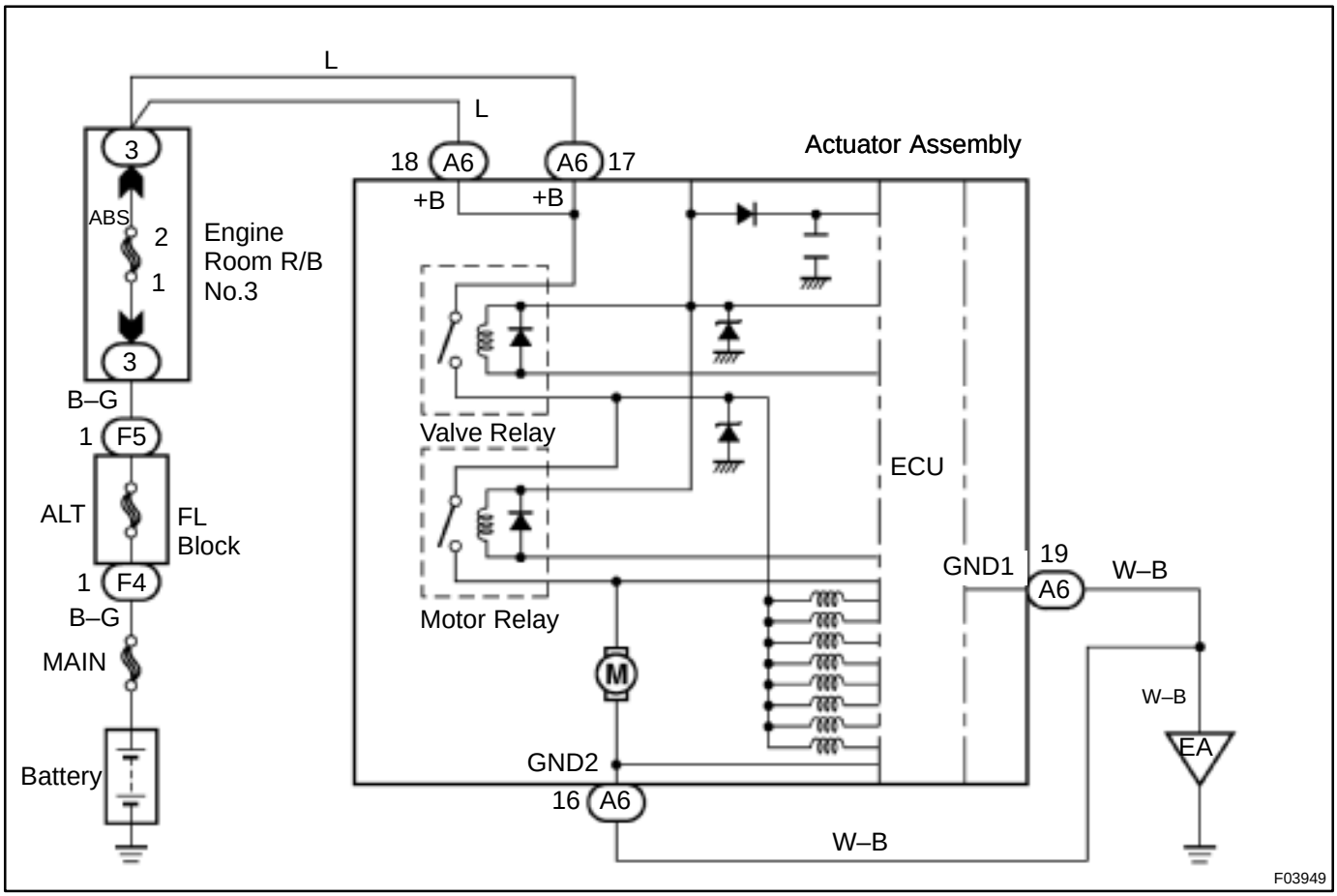

INSPECTION PROCEDURE

1	**Check voltage between terminals A6 – 17, 18 and A6 – 16, 19 of ABS actuator connector.**

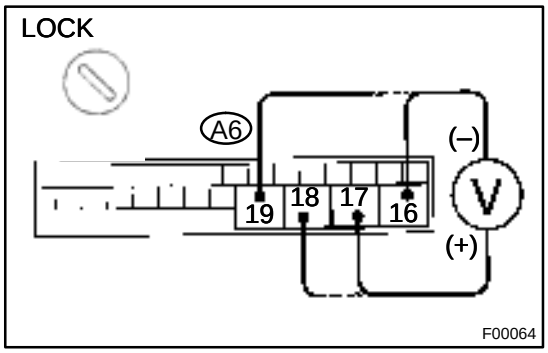

PREPARATION:
Disconnect the ABS actuator connector.
CHECK:
Measure the voltage between terminals A6 – 17, 18 and A6 – 16, 19 of ABS actuator harness side connector.
OK:

Voltage: 10 – 14 V

NG → **Check and replace fuses.**
Check and repair harness or connector.

OK

If the same code is still output after the DTC is deleted, check the contact condition of each connection.
If the connections are normal, the ECU may be defective.

DI042–08

DTC	21, 22, 23, 24	ABS Solenoid Valve Circuit

CIRCUIT DESCRIPTION

This solenoid goes on when signals are received from the ECU and controls the pressure acting on the wheel cylinders thus controlling the braking force.

DTC No.	DTC Detecting Condition	Trouble Area
21, 22, 23, 24	Solenoid valve signal does not match to the check result.	●Each solenoid valve

Fail safe function:
If trouble occurs in the actuator solenoid valve circuit, the ECU cuts off current to the ABS solenoid valve relay and prohibits ABS control.

WIRING DIAGRAM

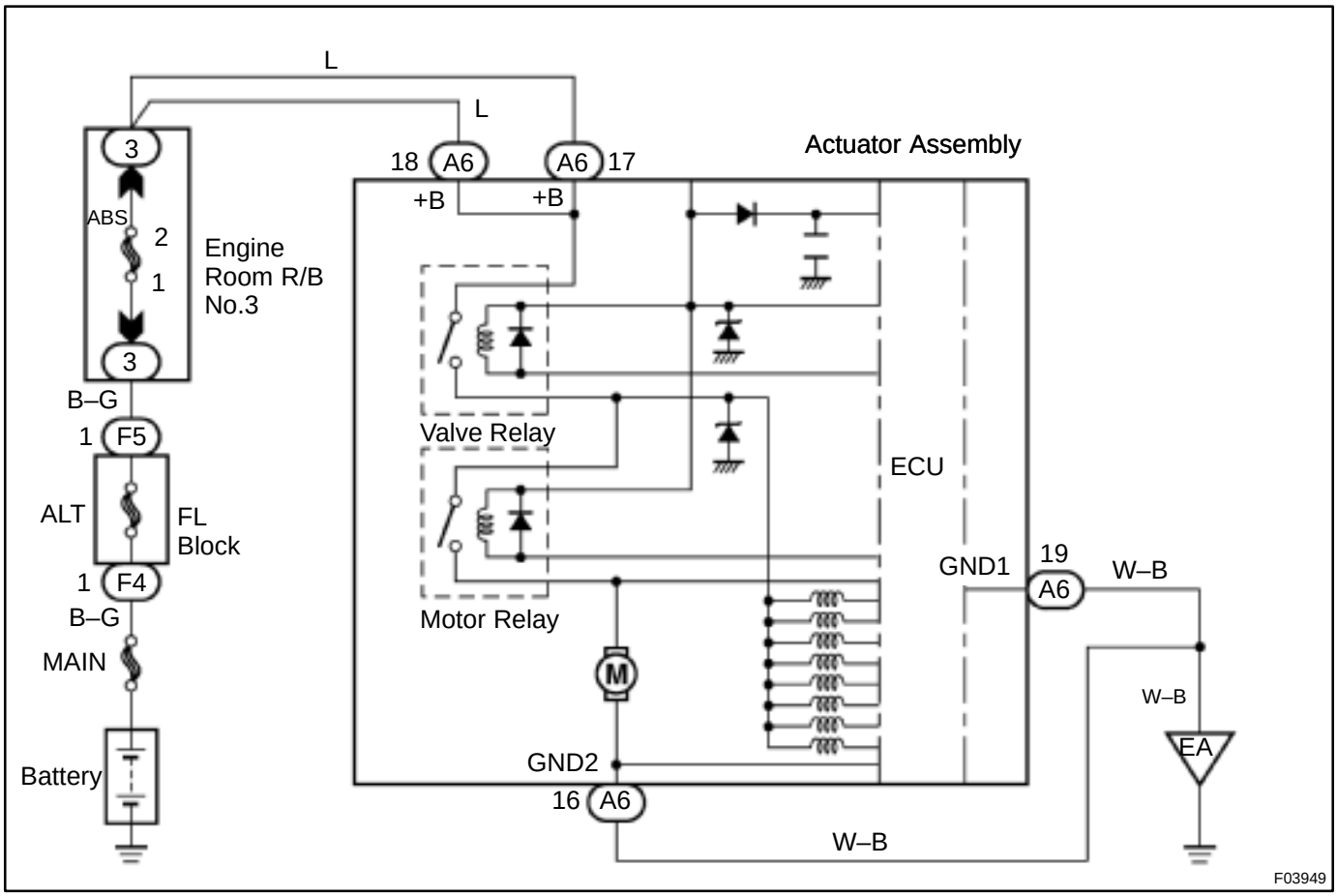

INSPECTION PROCEDURE

1	**Check the DTC once more.**

PREPARATION:

(a) Clear the DTC (See page DI–539).

(b) Turn the ignition switch OFF.

CHECK:

Turn the ignition switch ON, and check if the same DTC is stored in the memory.

NO → **No problem.**

YES

Replace ABS ECU.

DI043–04

DTC	31, 32, 33, 34, 35, 36, 38, 39	Speed Sensor Circuit

CIRCUIT DESCRIPTION

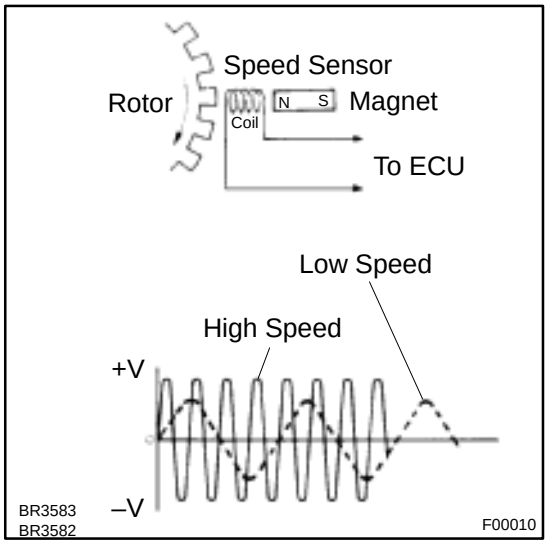

The speed sensor detects wheel speed and sends the appropriate signals to the ECU. These signals are used to control the ABS system. The front and rear rotors each have 48 serrations.

When the rotors rotate, the magnetic field emitted by the permanent magnet in the speed sensor generates an AC voltage. Since the frequency of this AC voltage changes in direct proportion to the speed of the rotor, the frequency is used by the ECU to detect the speed of each wheel.

DTC No.	DTC Detecting Condition	Trouble Area
31, 32, 33, 34	Detection of any of conditions from 1. through 3.: 1. Vehicle speed is more than 40 km/h (25 mph), pulses are not input for 0.01 sec. 2. After the initial start or restart and when the vehicle speed has reached 12 km/h (7 mph), the wheel with 0 km/h (0 mph) of wheel speed is detected. 3. After the initial start or restart and when the vehicle speed has reached 70 km/h (44 mph), front wheel with 0 km/h (0 mph) of wheel speed is detected.	●Right front, left front, right rear, left rear speed sensor ●Each speed sensor circuit ●Sensor installation ●ECU
35, 36, 38, 39	Detecting abnormality in the resistance value of each speed sensor.	●Right front, left front, right rear, left rear speed sensor ●Each speed sensor circuit ●ECU

HINT:

- DTC No. 31 and 35 are for the right front speed sensor.
- DTC No. 32 and 36 are for the left front speed sensor.
- DTC No. 33 and 38 are for the right rear speed sensor.
- DTC No. 34 and 39 are for the left rear speed sensor.

Fail safe function:

If trouble occurs in the speed sensor circuit, the ECU cuts off current to the ABS solenoid valve relay and prohibits ABS control.

WIRING DIAGRAM

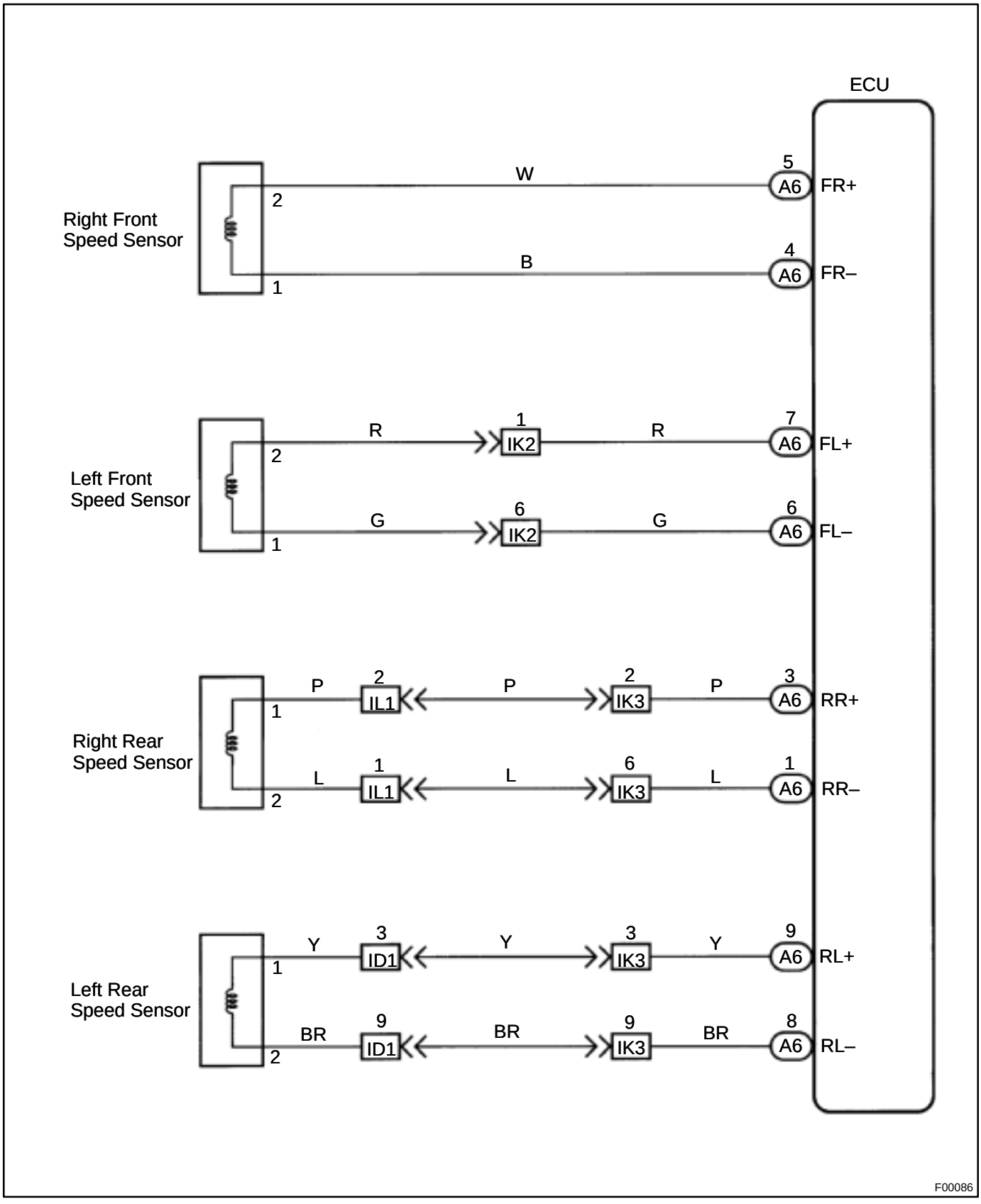

INSPECTION PROCEDURE

1	**Check speed sensor.**

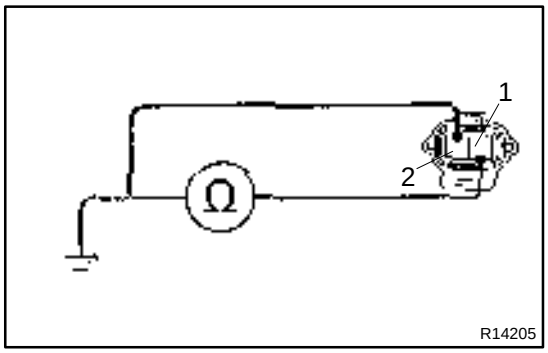

Front:

PREPARATION:

(a) Remove the front fender liner.

(b) Disconnect the speed sensor connector.

CHECK:

Measure resistance between terminals 1 and 2 of speed sensor connector.

OK:

Resistance: 0.6 – 2.5 kΩ

CHECK:

Measure resistance between terminals 1 and 2 of speed sensor connector and body ground.

OK:

Resistance: 1 MΩ or higher

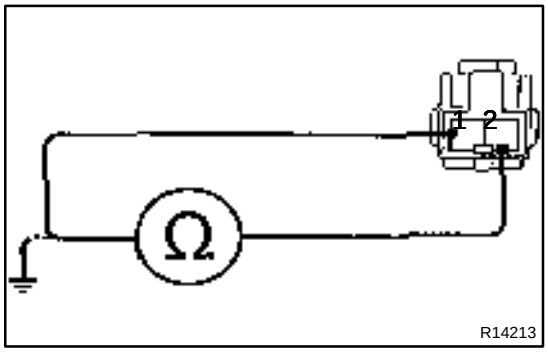

Rear:

PREPARATION:

(a) Remove the seat cushion and side seatback.

(b) Disconnect the speed sensor connector.

CHECK:

Measure resistance between terminals 1 and 2 of speed sensor connector.

OK:

Resistance: 1.2 – 2.3 kΩ

CHECK:

Measure resistance between terminals 1 and 2 of speed sensor connector and body ground.

OK:

Resistance: 1 MΩ or higher

NG → **Replace speed sensor.**

NOTICE:

Check the speed sensor signal last (See page DI–539).

OK

2	**Check for open and short circuit in harness and connector between each speed sensor and ECU (See page IN–31).**

NG → **Repair or replace harness or connector.**

OK

3	**Check speed sensor installation.**

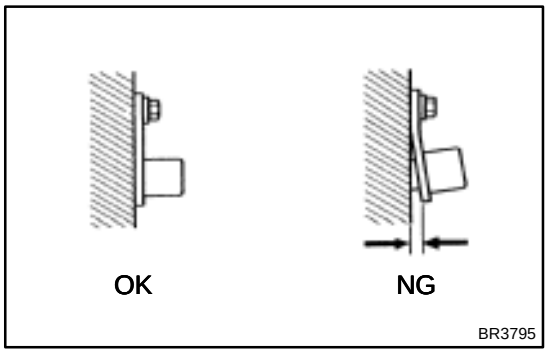

CHECK:
Check the speed sensor installation.
OK:

The installation bolt is tightened properly and there is no clearance between the sensor and steering knuckle or rear axle carrier.

NG → **Replace speed sensor.**

NOTICE:
Check the speed sensor signal last (See page DI–539).

OK

4	**Check sensor rotor and sensor tip.**

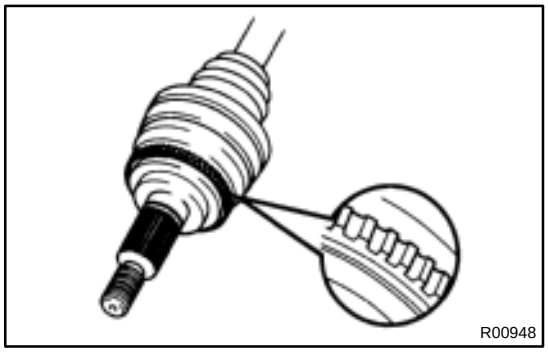

Front:
PREPARATION:
Remove the front drive shaft (See page SA–17 or SA–26).
CHECK:
Check the sensor rotor serrations.
OK:

No scratches or missing teeth or foreign objects.

PREPARATION:
Remove the front speed sensor (See page BR–68).
CHECK:
Check the sensor tip.
OK:

No scratches or foreign objects on the sensor tip.

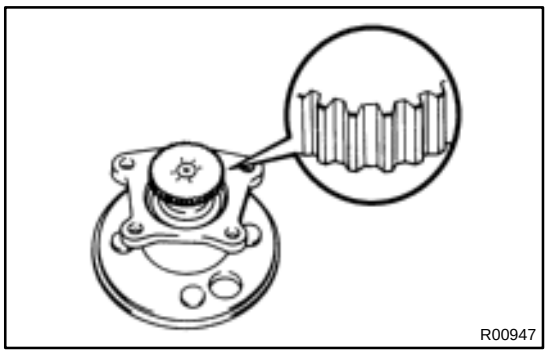

Rear:

PREPARATION:

Remove the axle hub (See page SA–52).

CHECK:

Check the sensor rotor serrations.

OK:

No scratches or missing teeth or foreign objects.

PREPARATION:

Remove the rear speed sensor (See page BR–70).

CHECK:

Check the sensor tip.

OK:

No scratches or foreign objects on the sensor tip.

NG → **Replace sensor rotor or speed sensor.**

NOTICE:

Check the speed sensor signal last (See page DI–539).

OK

Check and replace ABS ECU.

DI044–04

DTC	37	Speed Sensor Rotor Faulty

CIRCUIT DESCRIPTION

DTC No.	DTC Detecting Condition	Trouble Area
37	Detection of any of conditions from 1. through 3.: 1. Occurrence of differential to some degree in the wheel speed between the front and rear wheels of either left or right side of the vehicle and the front left and right wheels. (Detection of differential in mini tire size, spinning wheel and decelerating wheel.) 2. Continuous ABS control for 60 sec. or more. 3. Interference on 1 or more wheels for 20 sec. with the brake pedal depressed, or for 5 sec. when the brake pedal is not depressed.	●Speed sensor ●Sensor rotor ●ECU

INSPECTION PROCEDURE

1	**Check sensor rotor (See page DI–552).**

NG → **Replace sensor rotor.**

OK

2	**Check speed sensor (See page DI–552).**

NG → **Replace speed sensor.**

OK

3	**Check for open and short circuit in harness and connector between speed sensor and ECU (See page IN–31).**

NG → **Repair or replace harness and connector.**

OK

Check and replace ABS ECU.

DI045–08

DTC	41	Power Source Circuit

CIRCUIT DESCRIPTION

This is the power source for the ECU, hence the actuators.

DTC No.	DTC Detecting Condition	Trouble Area
41	Vehicle speed at about 6 km/h (4 mph), low battery voltage is less than 9.4 V at the time of non–operation of ABS control or less than 8.8 V at the time of operation of ABS control, and high battery voltage is more than 17.4 V.	●Battery ●Charging system ●Power source circuit ●ECU

Fail safe function:
If trouble occurs in the power source circuit, the ECU cuts off current to the ABS solenoid valve relay and prohibits ABS control.

WIRING DIAGRAM

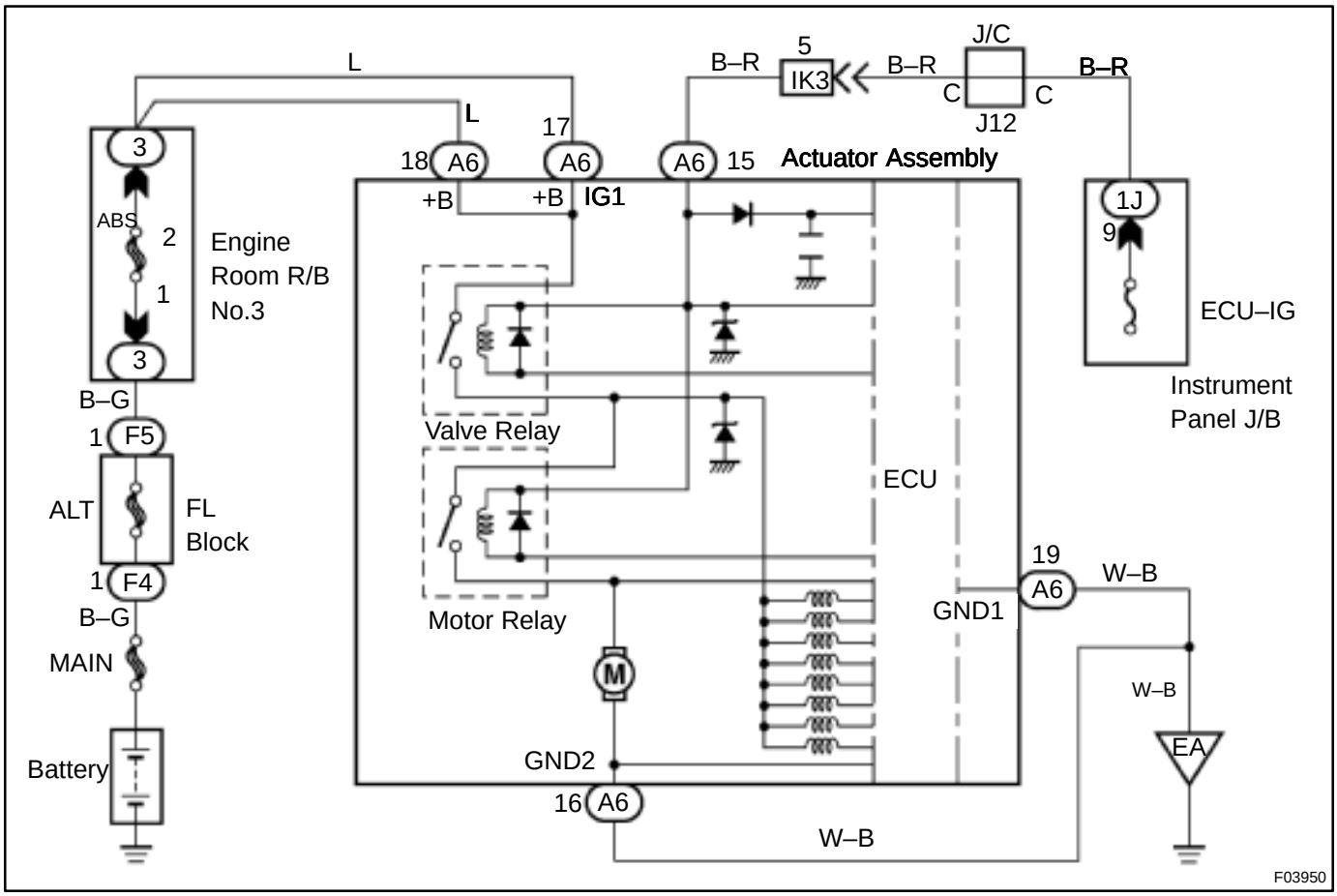

INSPECTION PROCEDURE

1	**Check ECU–IG fuse.**

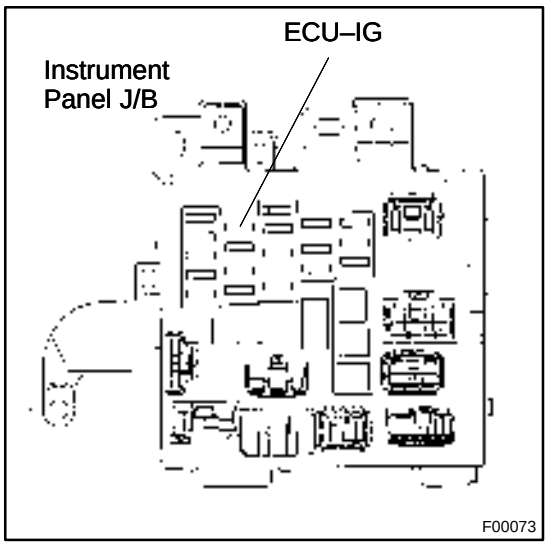

PREPARATION:
Remove ECU–IG fuse from Instrument Panel J/B.
CHECK:
Check continuity of ECU–IG fuse.
OK:
Continuity

NG → **Check for short circuit in all the harness and components connected to ECU–IG fuse (See the attached wiring diagram.)**

OK

2	**Check battery positive voltage.**

OK:
Voltage: 10 – 14 V

NG → **Check and repair the charging system**
5S–FE engine: (See page CH–1)
1MZ–FE engine: (See page CH–1).

OK

3	Check voltage between terminals IG1 and GND of ABS actuator connector.

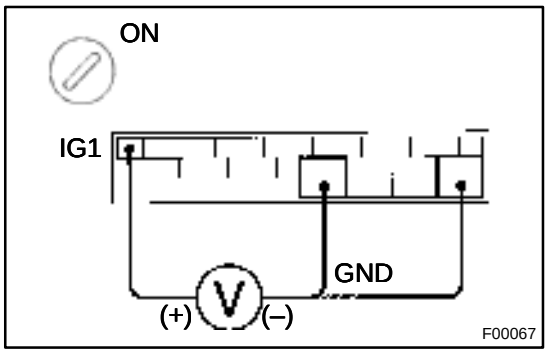

PREPARATION:
Disconnect ABS actuator connector.
CHECK:
(a) Turn the ignition switch ON.
(b) Measure voltage between terminals IG1 and GND of ABS actuator harness side connector.
OK:
Voltage: 10 – 14 V

OK	Check and replace ABS ECU.

NG

4	Check continuity between terminals GND of ABS actuator connector and body ground.

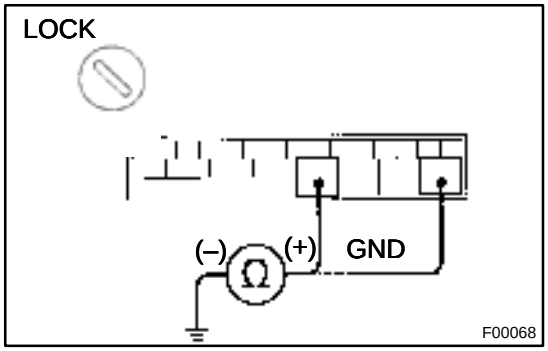

CHECK:
Measure resistance between terminal GND of ABS actuator harness side connector and body ground.
OK:
Resistance: 1 Ω or less

NG	Repair or replace harness or connector.

OK

Check for open circuit in harness and connector between ABS ECU and ECU–IG (See page IN–31).

DI046–09

DTC	58	Stop Light Switch Circuit

CIRCUIT DESCRIPTION

DTC No.	DTC Detecting Condition	Trouble Area
49	Stop light switch circuit is open, and stop light switch voltage is in the level between 65 % or more and less than 93 % of the battery voltage.	●Stop light switch ●Stop light switch circuit ●ECU

WIRING DIAGRAM

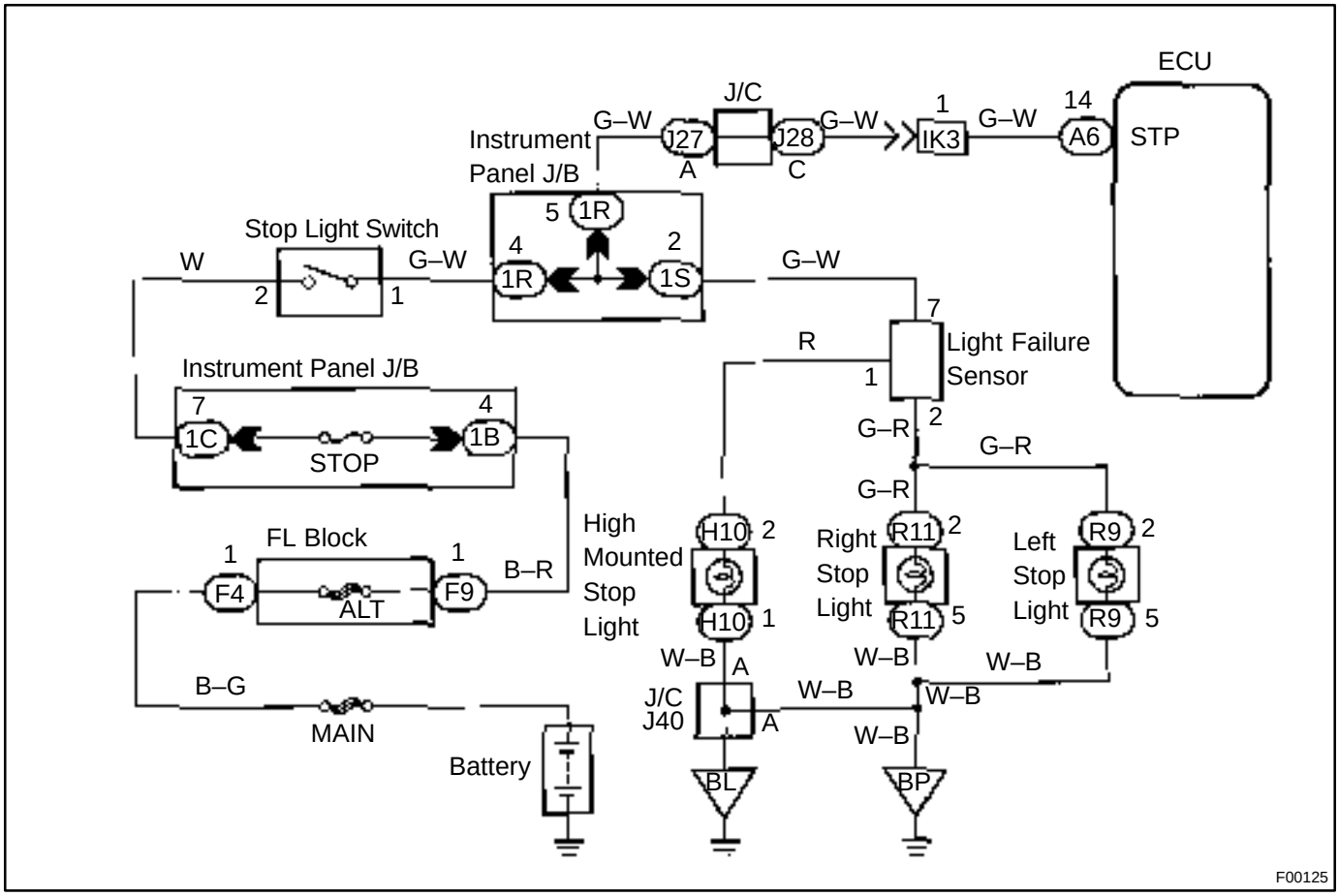

INSPECTION PROCEDURE

1	Check operation of stop light.

CHECK:

Check that stop light lights up when brake pedal is depressed and turns off when brake pedal is released.

NG → **Repair stop light circuit (See page BE–36).**

OK

2	**Check voltage between terminal STP of ABS actuator and body ground.**

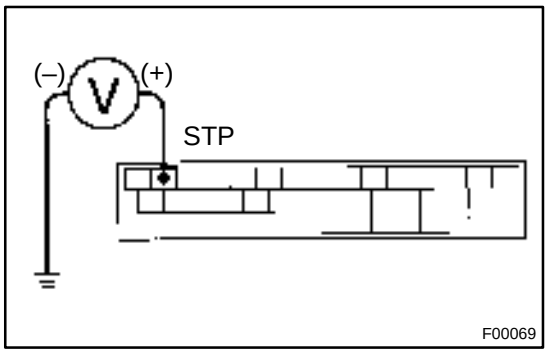

PREPARATION:
Disconnect ABS actuator connector.
CHECK:
Measure voltage between terminal STP of ABS actuator harness side connector and body ground when brake pedal is depressed.
OK:
Voltage: 8 – 14 V

OK → **Check and replace ABS ECU.**

NG

3	**Check for open circuit in harness and connector between ABS ECU and stop light switch (See page IN–31).**

NG → **Repair or replace harness or connector.**

OK

Proceed to next circuit inspection shown on problem symptoms table (See page DI–545).

DI047–06

DTC	62	ABS ECU Malfunction

CIRCUIT DESCRIPTION

DTC No.	DTC Detecting Condition	Trouble Area
62	ABS ECU continuously detects the proper operation of ABS.	●Battery ●ECU

Fail safe function:
If trouble occurs in the power source circuit, the ECU cuts off current to the ABS solenoid valve relay and prohibits ABS control.

INSPECTION PROCEDURE

1	Is DTC output?

Check DTC on page DI–539.

YES → **Repair circuit indicated by the code output.**

NO ↓

2	Is normal code displayed?

YES → **Check for short circuit in harness and connector between DLC1 or DLC2 and ABS ECU (See page IN–31).**

NO ↓

3	Does ABS warning light go off?

YES → **Check for open and short circuit in harness and connector of Tc circuit between ECU and DLC2 or DLC1.**

NO ↓

4	Check voltage between terminals IG1 and GND of ABS actuator connector.

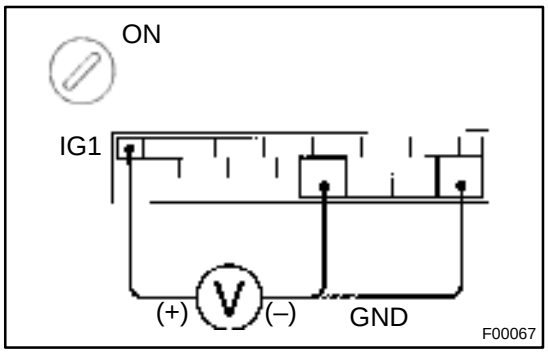

PREPARATION:
Disconnect ABS actuator connector.
CHECK:
(a) Turn the ignition switch ON.
(b) Measure voltage between terminals IG1 and GND of ABS actuator harness side connector.
OK:
Voltage: 10 – 14 V

NG → **Check for open and short circuit in harness and connector between ECU–IG fuse and ABS actuator (See page IN–31).**

OK

5	Check connection of ABS actuator connector.

CHECK:
Check the connection of the ABS actuator connector and check the ABS warning light goes off.

OK → **Repair or replace harness or connector.**

NG

Check and replace ABS ECU.

DI048–08

ABS Warning Light Circuit

CIRCUIT DESCRIPTION

If the ECU detects any trouble, it lights the ABS warning light while at the same time prohibiting ABS control. At this time, the ECU records a DTC in memory.
Connect terminals Tc and E_1 of the DLC1 or DLC2 to make the ABS warning light blink and output the DTC.

WIRING DIAGRAM

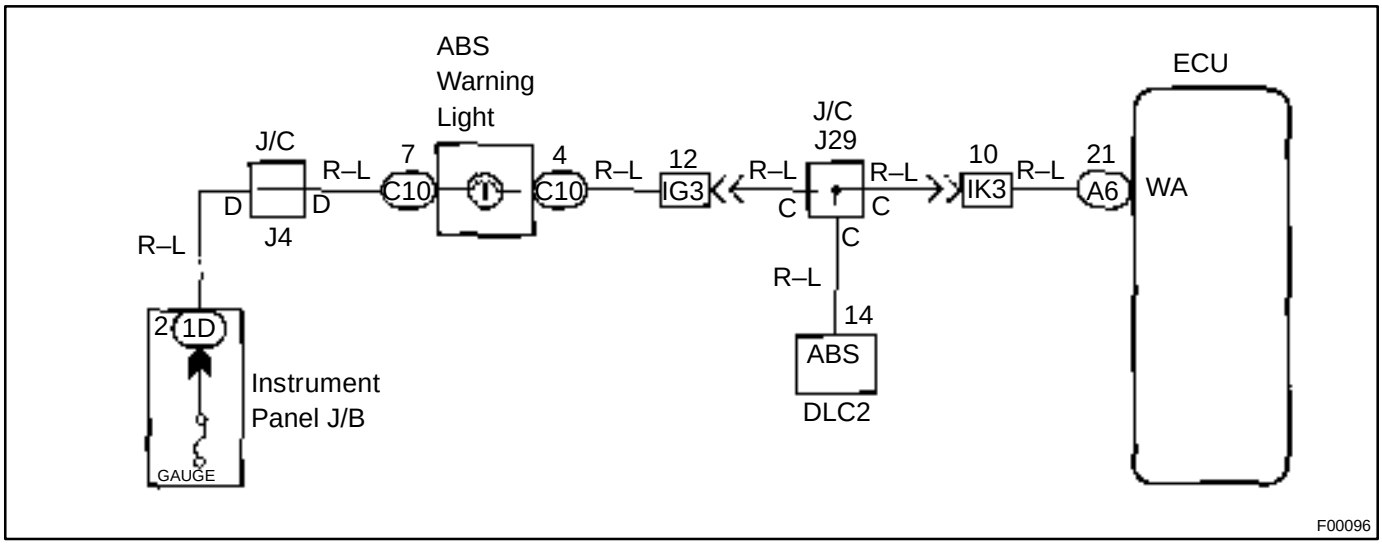

INSPECTION PROCEDURE

Troubleshoot in accordance with the chart below for each trouble symptom

ABS warning light does not light up	Go to step 1
ABS warning light remains on	Go to step 2

1	**Check ABS warning light.**

See combination meter troubleshooting on page BE–2.

NG → **Repair bulb or combination meter assembly.**

OK

Check for open circuit in harness and connector between GAUGE fuse, DLC2 and ABS ECU (See page IN–31).

2	**Is DTC output?**

Check DTC on page DI–539.

YES → **Repair circuit indicated by the code output.**

NO

Check for short circuit in harness and connector between ABS warning light, DLC1, DLC2, and ECU (See page IN–31).

DI049–08

Tc Terminal Circuit

CIRCUIT DESCRIPTION

Connecting between terminals Tc and E_1 of the DLC1 or the DLC2 causes the ECU to display the DTC by flashing the ABS warning light.

WIRING DIAGRAM

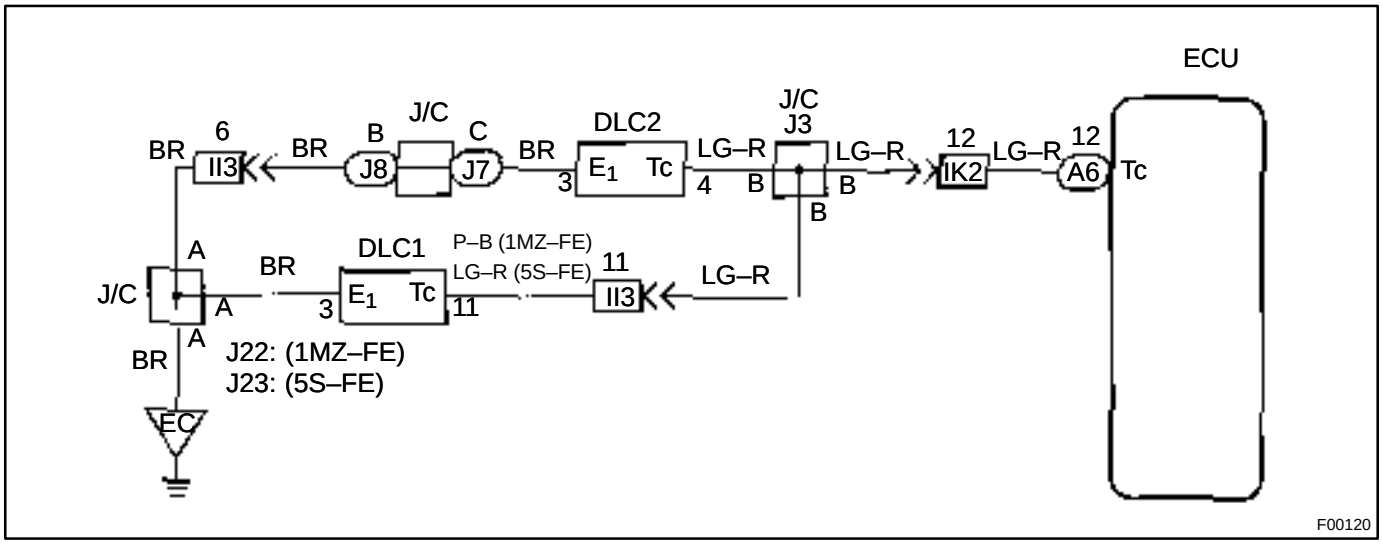

INSPECTION PROCEDURE

1	**Check voltage between terminals Tc and E_1 of DLC2 or DLC1.**

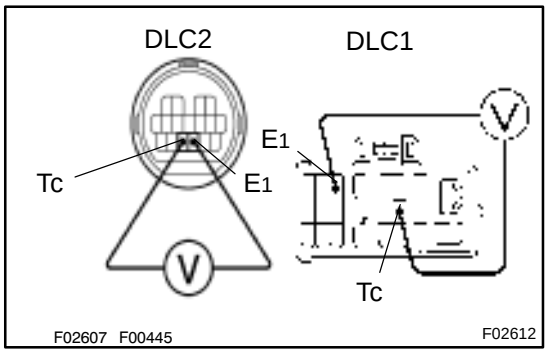

CHECK:

(a) Turn the ignition switch ON.

(b) Measure voltage between terminals Tc and E_1 of DLC2 or DLC1.

OK:

Voltage: 10 – 14 V

OK	**If ABS warning light does not blink even after Tc and E_1 are connected, the ECU may be defective.**

NG

2	**Check for open and short circuit in harness and connector between ABS ECU and DLC2 or DLC1, DLC2 or DLC1 and body ground (See page IN–31).**

NG → **Repair or replace harness or connector.**

OK

Check and replace ABS ECU.

DI04A–08

Ts Terminal Circuit

CIRCUIT DESCRIPTION

The sensor check circuit detects abnormalities in the speed sensor signal which cannot be detected with the DTC check.
Connecting terminals Ts and E_1 of the DLC1 in the engine compartment starts the check.

WIRING DIAGRAM

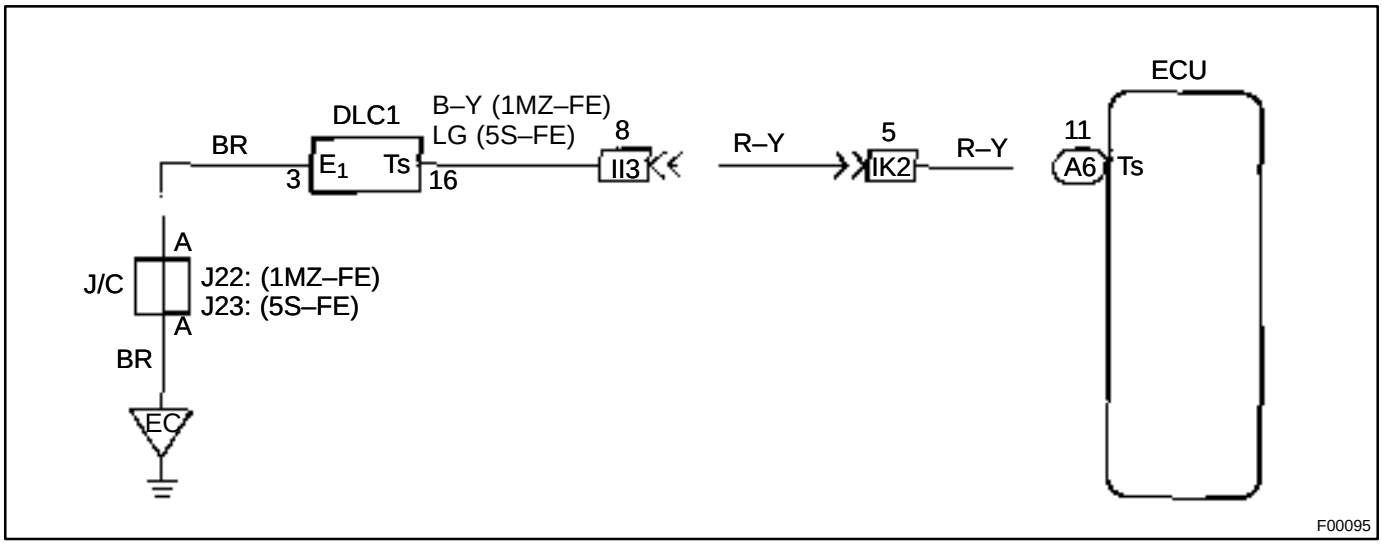

INSPECTION PROCEDURE

1	**Check voltage between terminals Ts and E_1 of DLC1.**

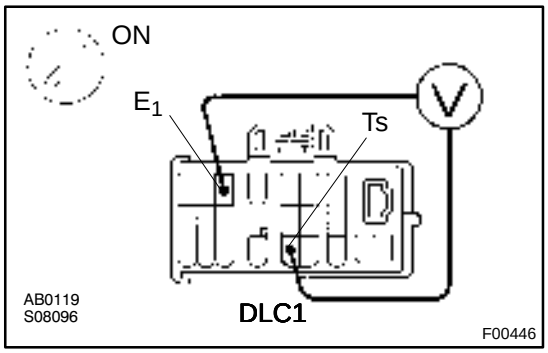

CHECK:

(a) Turn the ignition switch ON.
(b) Measure voltage between terminals Ts and E_1 of DLC1.

OK:

Voltage: 10 – 14 V

OK	**If ABS warning light does not blink even after Ts and E_1 are connected, the ECU may be defective.**

NG

2	**Check for open and short circuit in harness and connector between ABS ECU and DLC1, DLC1 and body ground (See page IN–31).**

NG → **Repair or replace harness or connector.**

OK

Check and replace ABS ECU.

Check for Fluid Leakage

Check for fluid leakage from actuator or hydraulic lines.

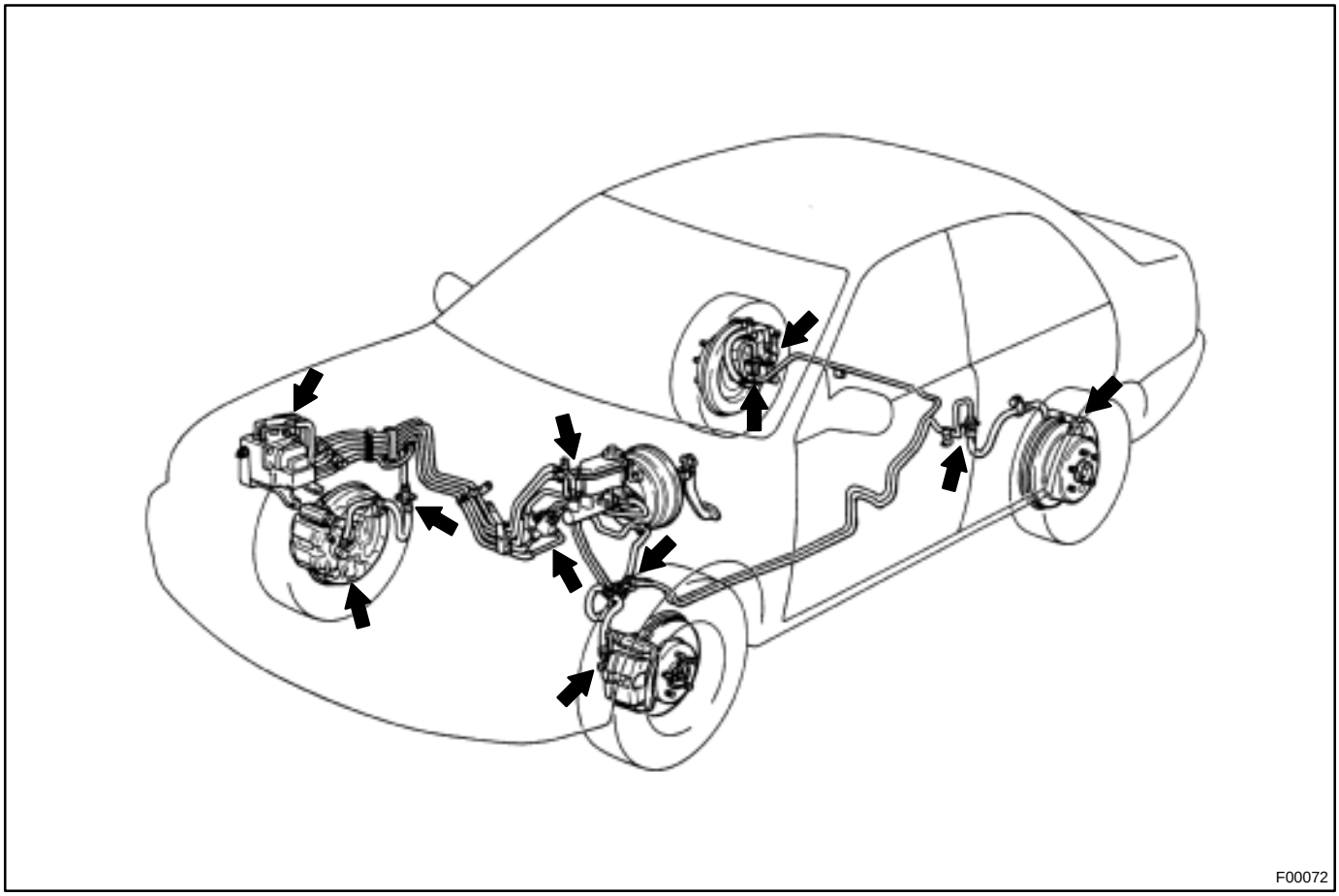

ABS & TRACTION CONTROL SYSTEM

HOW TO PROCEED WITH TROUBLESHOOTING

DI04C–02

Troubleshoot in accordance with the procedure on the following pages.

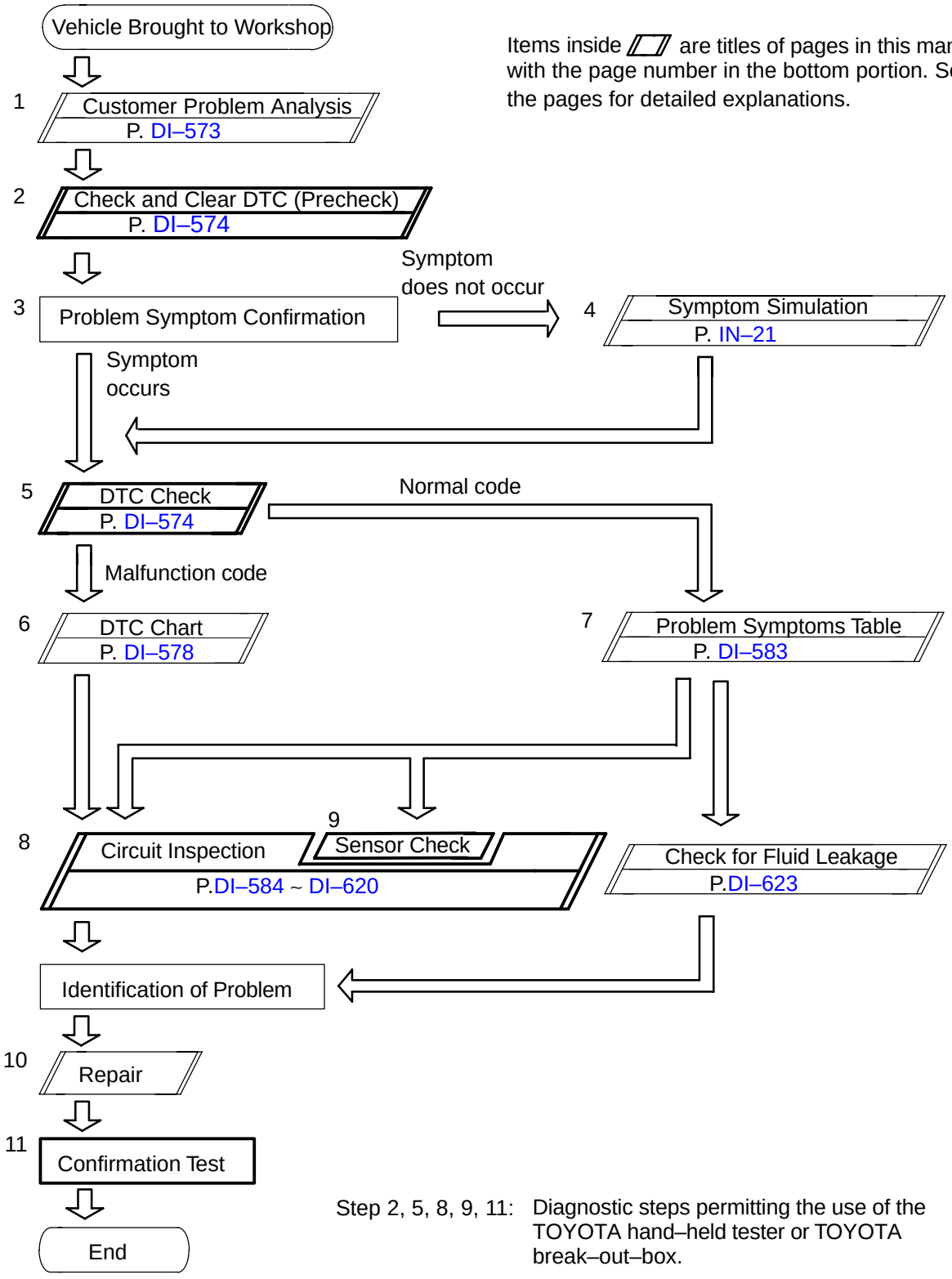

Items inside ▱ are titles of pages in this manual, with the page number in the bottom portion. See the pages for detailed explanations.

Step 2, 5, 8, 9, 11: Diagnostic steps permitting the use of the TOYOTA hand–held tester or TOYOTA break–out–box.

DI04D–02

CUSTOMER PROBLEM ANALYSIS CHECK

ABS & TRAC Check Sheet

Inspector's Name :

Customer's Name		**Registration No.**	
		Registration Year	/ /
		Frame No.	
Date Vehicle Brought In	/ /	**Odometer Reading**	km miles

Date Problem First Occurred	/ /
Frequency Problem Occurs	☐ Continuous ☐ Intermittent (times a day)

Symptoms	☐ ABS does not operate.	
	☐ ABS does not operate efficiently.	
	☐ TRAC does not operate. (Wheels spin when starting rapidly.)	
	ABS Warning Light Abnormal	☐ Remains ON ☐ Does not Light Up
	TRAC OFF Indicator Light Abnormal	☐ Remains ON ☐ Blinks ☐ Does not Light Up
	SLIP Indicator Light Abnormal	☐ Remains ON ☐ Does not Light Up

Check Item	**Malfunction Indicator Light**	☐ Normal ☐ Malfunction Code (Code)

DTC Check	**1st Time**	☐ Normal Code ☐ Malfunction Code (Code)
	2nd Time	☐ Normal Code ☐ Malfunction Code (Code)

DI04E–04

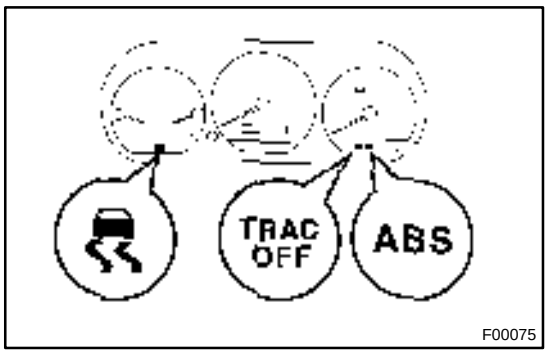

PRE–CHECK

1. DIAGNOSIS SYSTEM

(a) Check the indicator.

When the ignition switch is turned ON, check that the ABS warning light, TRAC OFF indicator light and SLIP indicator light go on for 3 seconds.

HINT:

If the indicator check result is not normal, proceed to troubleshooting for the ABS warning light circuit, TRAC OFF indicator light circuit and SLIP indicator light circuit

(See page DI–612, DI–617, DI–620).

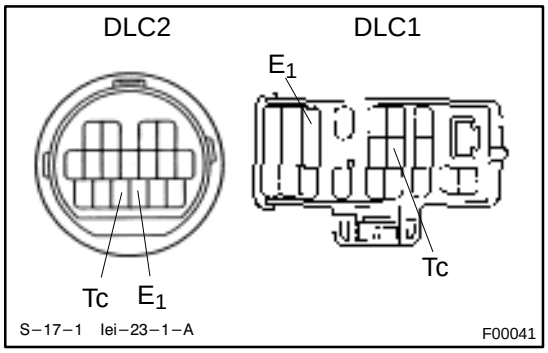

(b) Check the DTC.

(1) Using SST, connect terminals Tc and E_1 of DLC2 or DLC1.

SST 09843 – 18020

(2) Turn the ignition switch ON.

(3) Read the DTC from the ABS warning light and TRAC OFF indicator light on the combination meter.

HINT:

If no code appears, inspect the diagnostic circuit or ABS warning light circuit, TRAC OFF indicator light circuit

(See page DI–621 or DI–612, DI–617).

As an example, the blinking patterns for normal code and codes 11 and 21 are shown on the left.

(4) Codes are explained in the code table on page DI–578.

(5) After completing the check, disconnect terminals Tc and E_1, and turn off the display.

If 2 or more malfunctions are indicated at the same time the lowest numbered DTC will be displayed 1st.

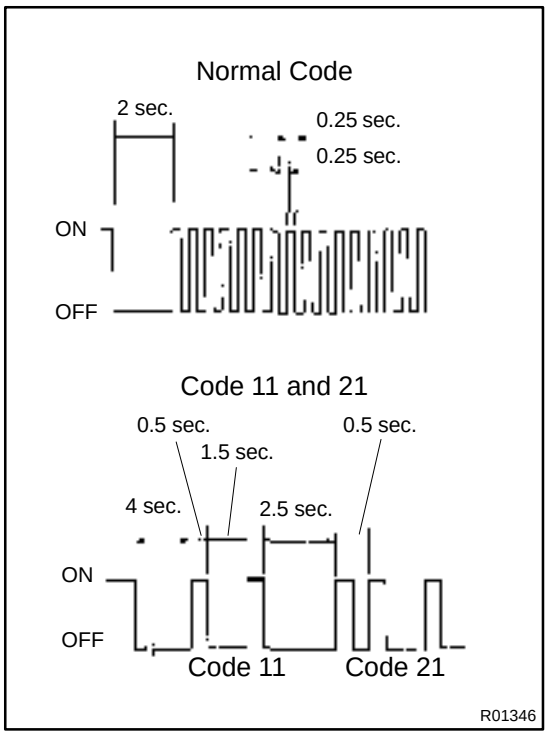

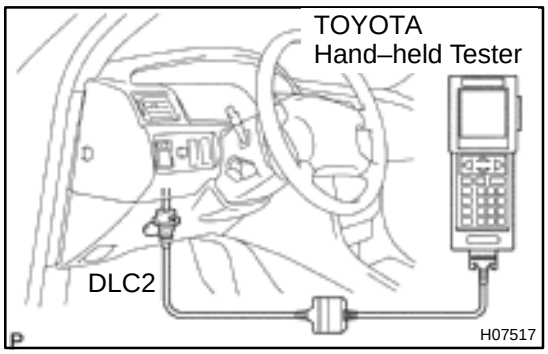

(c) Using TOYOTA hand–held tester, check the DTC.
(1) Hook up the TOYOTA hand–held tester to the DLC2.
(2) Read the DTC by following the prompts on the tester screen.
Please refer to the TOYOTA hand–held tester operator's manual for further details.

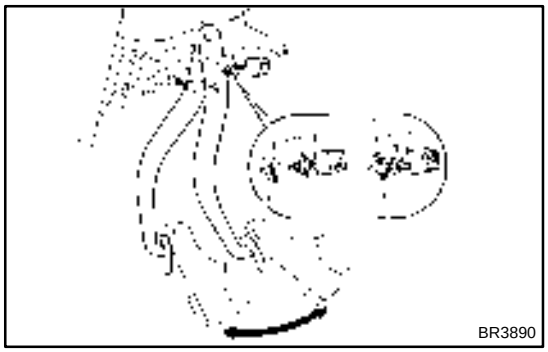

(d) Clear the DTC.
(1) Using SST, connect terminals Tc and E_1 of DLC2 or DLC1.
SST 09843 – 18020
(2) Turn the ignition switch ON.
(3) Clear the DTC stored in ECU by depressing the brake pedal 8 or more times within 5 seconds.
(4) Check that the warning light shows the normal code.
(5) Remove the SST from the terminals of DLC2 or DLC1.
SST 09843 – 18020

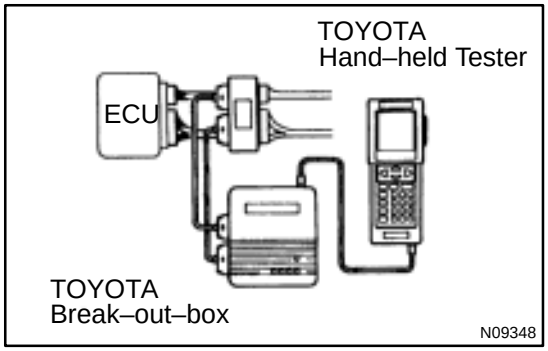

(e) Using TOYOTA break–out–box and TOYOTA hand–held tester, measure the ECU terminal values.
(1) Hook up the TOYOTA hand–held tester and TOYOTA break–out–box to the vehicle.
(2) Read the ECU input/output values by following the prompts on the tester screen.

HINT:
TOYOTA hand–held tester has a "Snapshot" function. This records the measured values and is effective in the diagnosis of intermittent problems.
Please refer to the TOYOTA hand–held tester/TOYOTA break–out–box operator's manual for further details.

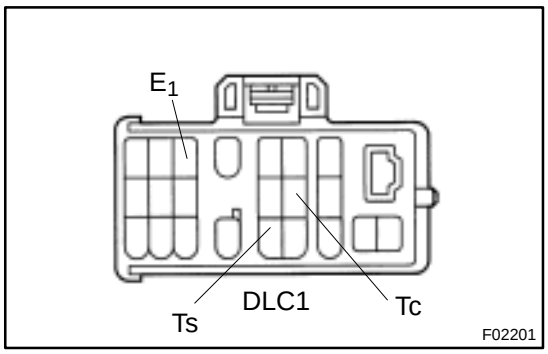

2. SPEED SENSOR SIGNAL

(a) Check the speed sensor signal.

(1) Turn the ignition switch OFF.

(2) Using SST, connect terminals Ts and E_1 of DLC1.

SST 09843 – 18020

(3) Start the engine.

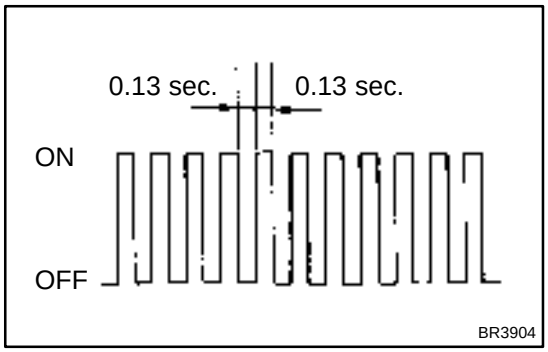

(4) Check that the ABS warning light blinks.

HINT:

If the ABS warning light does not blink, inspect the ABS warning light circuit (See page DI–612).

(5) Drive vehicle straight forward.

HINT:

Drive vehicle faster than 45 km/h (28 mph) for several seconds.

(6) Stop the vehicle.

(7) Using SST, connect terminals Tc and E_1 of DLC1.

SST 09843 – 18020

(8) Read the number of blinks of the ABS warning light.

HINT:

- See the list of DTC shown on the next page.
- If 2 or more malfunctions are indicated at the same time, the lowest numbered code will be displayed 1st.
- If every sensor is normal, a normal code is output (A cycle of 0.25 sec. ON and 0.25 sec. OFF is repeated).

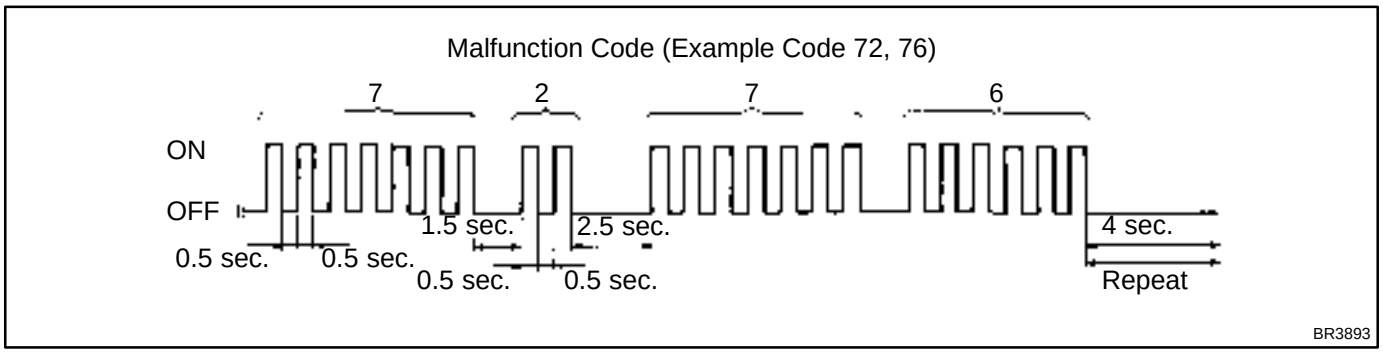

(9) After doing the check, disconnect the SST from terminals Ts and E_1, Tc and E_1 of DLC1, and turn ignition switch OFF.

SST 09843 – 18020

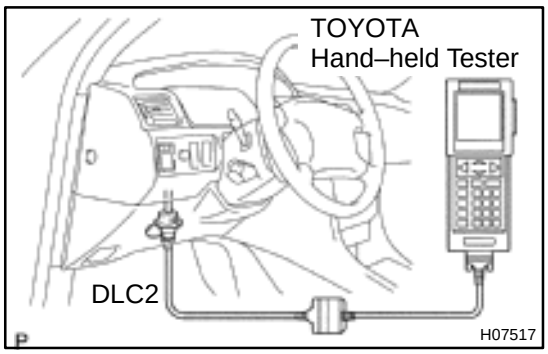

(b) Using TOYOTA hand–held tester, check the DTC.
(1) Do step 1. ~ 6. on the previous page.
(2) Hook up the TOYOTA hand–held tester to the DLC2.
(3) Read the DTC by following the prompts on the tester screen.
Please refer to the TOYOTA hand–held tester operator's manual for further details.

DTC of speed sensor check function:

Code No.	Diagnosis	Trouble Area
71	Low output voltage of right front speed sensor	●Right front speed sensor ●Sensor installation ●Right front speed sensor rotor
72	Low output voltage of left front speed sensor	●Left front speed sensor ●Sensor installation ●Left front speed sensor rotor
73	Low output voltage of right rear speed sensor	●Right rear speed sensor ●Sensor installation ●Right rear speed sensor rotor
74	Low output voltage of left rear speed sensor	●Left rear speed sensor ●Sensor installation ●Left rear speed sensor rotor
75	Abnormal change in output voltage of right front speed sensor	●Right front speed sensor rotor
76	Abnormal change in output voltage of left front speed sensor	●Left front speed sensor rotor
77	Abnormal change in output voltage of right rear speed sensor	●Right rear speed sensor rotor
78	Abnormal change in output voltage of left rear speed sensor	●Left rear speed sensor rotor

DI04F–04

DIAGNOSTIC TROUBLE CODE CHART

HINT:

- Using SST 09843 –18020, connect the terminals Tc and E_1.
- If a malfunction code is displayed during the DTC check, check the circuit listed for the code. For details of each code, turn to the page referred to under the ”See page” for respective ”DTC No.” in the DTC chart.

DTC No. (See Page)	Detection Item	Trouble Area
11 (DI–584)	Open circuit in ABS & TRAC solenoid relay circuit	●ABS & TRAC solenoid relay ●ABS & TRAC solenoid relay circuit ●ECU
12 (DI–584)	Short circuit in ABS & TRAC solenoid relay circuit	
13 (DI–587)	Open circuit in ABS & TRAC motor relay circuit	●ABS & TRAC motor relay ●ABS & TRAC motor relay circuit ●ECU
14 (DI–587)	Short circuit in ABS & TRAC motor relay circuit	
21 (DI–590)	Open or short circuit in right front solenoid circuit	●ABS & TRAC actuator ●SFRR or SFRH circuit ●ECU
22 (DI–590)	Open or short circuit in left front solenoid circuit	●ABS & TRAC actuator ●SFLR or SFLH circuit ●ECU
23 (DI–590)	Open or short circuit in right rear solenoid circuit	●ABS & TRAC actuator ●SRRR or SRRH circuit ●ECU
24 (DI–590)	Open or short circuit in left rear solenoid circuit	●ABS & TRAC actuator ●SRLR or SRLH circuit ●ECU
25 (DI–590)	Open or short circuit in SMC1 circuit	●ABS & TRAC actuator ●SMC1 circuit ●ECU
26 (DI–590)	Open or short circuit in SMC2 circuit	●ABS & TRAC actuator ●SMC2 circuit ●ECU
27 (DI–590)	Open or short circuit in SRC1 circuit	●ABS & TRAC actuator ●SRC1 circuit ●ECU
28 (DI–590)	Open or short circuit in SRC2 circuit	●ABS & TRAC actuator ●SRC2 circuit ●ECU
31 (DI–593)	Right front wheel speed sensor signal malfunction	●Right front, left front, right rear and left rear speed sensor ●Each speed sensor circuit ●Speed sensor rotor ●ECU
32 (DI–593)	Left front wheel speed sensor signal malfunction	
33 (DI–593)	Right rear wheel speed sensor signal malfunction	
34 (DI–593)	Left rear wheel speed sensor signal malfunction	
41 (DI–598)	Low battery positive voltage or abnormally high battery positive voltage	●Battery ●Charging system ●Power source circuit ●ECU

43* (DI–601)	Malfunction in ABS control system	●ABS control system
44* (DI–602)	Open or short circuit in NE signal circuit	●NEO circuit ●ECM ●ECU
49 (DI–604)	Open circuit in stop light switch circuit	●Stop light switch ●Stop light switch circuit ●ECU
51 (DI–606)	Pump motor is locked	●ABS pump motor
53* (DI–608)	Malfunction in ECM communication circuit	●TRC+ or TRC – circuit ●EFI+ or EFI– circuit ●ECM ●ECU
61* (DI–609)	Malfunction in engine control system	●Engine control system
Always ON (DI–610)	Malfunction in ECU	●ECU

*: TRAC OFF indicator light blinking

DI04G–04

PARTS LOCATION

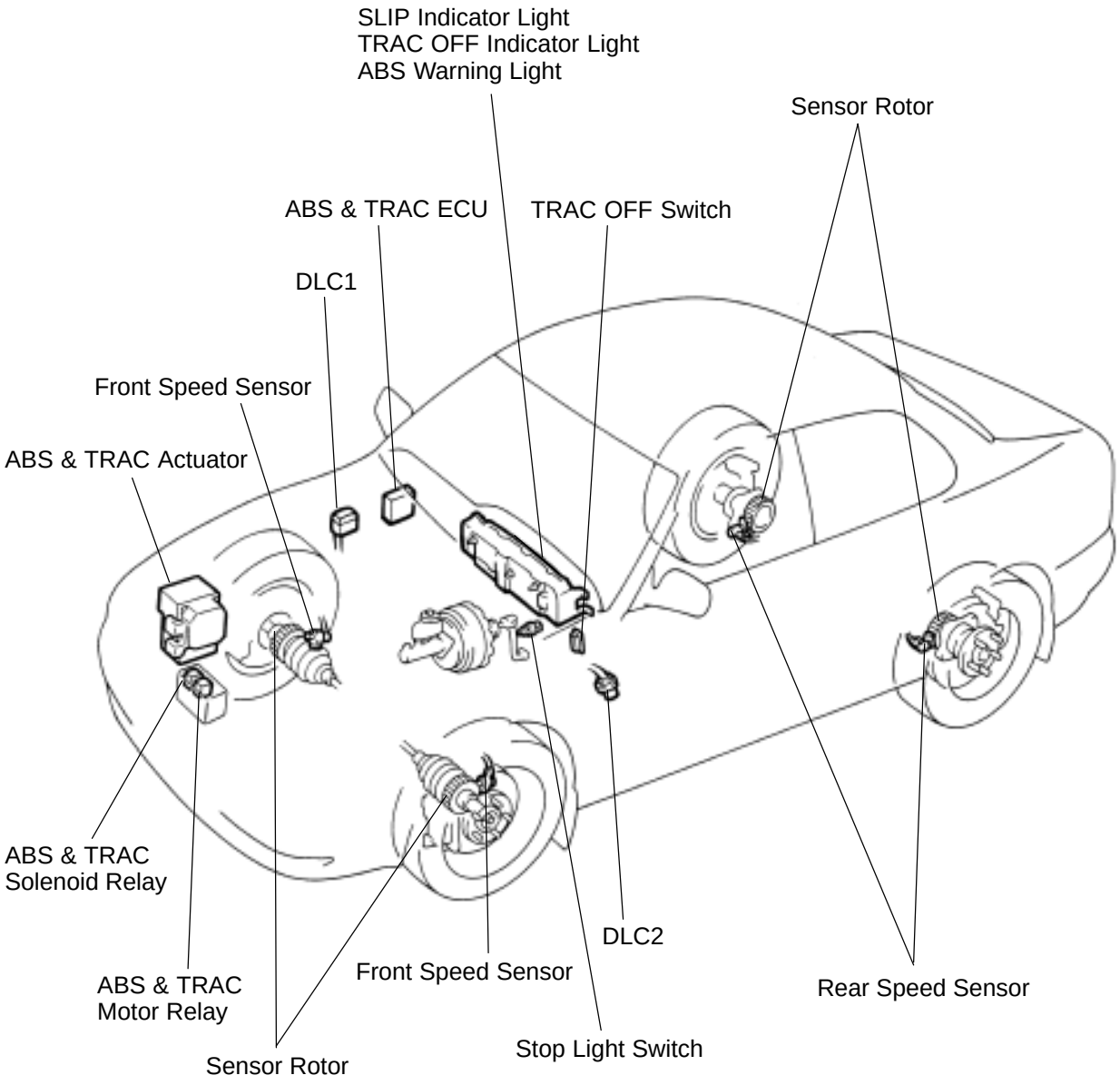

F01177

DI1JO–03

TERMINALS OF ECU

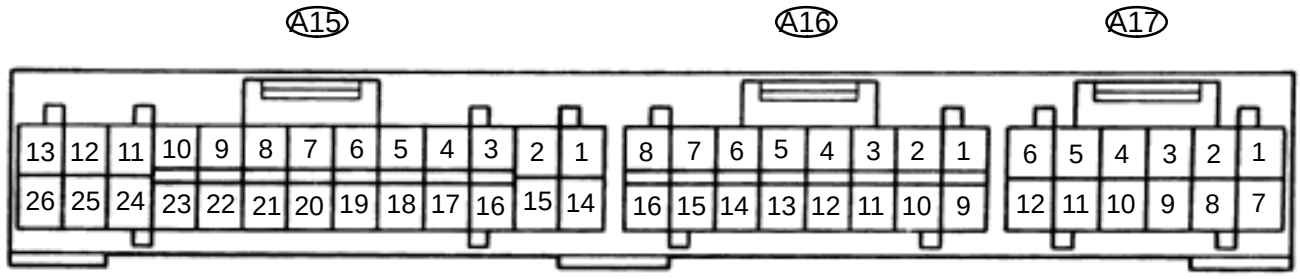

R05698

Symbols (Terminals No.)	Wiring Color	Condition	STD Voltage (V)
IG1 (A16 – 8) – GND (A15 – 15, A17 – 9, 10)	B–R ↔ W–B	IG switch ON	10 – 14
R+ (A15 – 1) – SR (A15 – 11)	GR–R ↔ GR	IG switch ON, ABS warning light OFF	9 – 14
R+ (A15 – 1) – MR (A15 – 24)	GR–R ↔ GR–L	IG switch ON	Below 1.0
SFRR (A15 – 26) – GND (A15 – 15, A17 – 9, 10)	W–R ↔ W–B	IG switch ON, ABS warning light OFF	10 – 14
SFRH (A15 – 13) – GND (A15 – 15, A17 – 9, 10)	R–B ↔ W–B	IG switch ON, ABS warning light OFF	10 – 14
SFLR (A17 – 1) – GND (A15 – 15, A17 – 9, 10)	W–L ↔ W–B	IG switch ON, ABS warning light OFF	10 – 14
SFLH (A17 – 2) – GND (A15 – 15, A17 – 9, 10)	L–B ↔ W–B	IG switch ON, ABS warning light OFF	10 – 14
SRRR (A17 – 7) – GND (A15 – 15, A17 – 9, 10)	R–G ↔ W–B	IG switch ON, ABS warning light OFF	10 – 14
SRRH (A17 – 8) – GND (A15 – 15, A17 – 9, 10)	W–R ↔ W–B	IG switch ON, ABS warning light OFF	10 – 14
SRLR (A15 – 12) – GND (A15 – 15, A17 – 9, 10)	LG–B ↔ W–B	IG switch ON, ABS warning light OFF	10 – 14
SRLH (A15 – 25) – GND (A15 – 15, A17 – 9, 10)	G–Y ↔ W–B	IG switch ON, ABS warning light OFF	10 – 14
AST (A15 – 10) – GND (A15 – 15, A17 – 9, 10)	R ↔ W–B	IG switch ON, ABS warning light OFF	10 – 14
WA (A16 – 4) – GND (A15 – 15, A17 – 9, 10)	G–B ↔ W–B	IG switch ON, ABS warning light ON	Below 2.0
		IG switch ON, ABS warning light OFF	10 – 14
STP (A16 – 16) – GND (A15 – 15, A17 – 9, 10)	G–W ↔ W–B	Stop light switch OFF	Below 1.5
		Stop light switch ON	8 – 14
D/G (A15 – 22) – GND (A15 – 15, A17 – 9, 10)	R–L ↔ W–B	IG switch ON, ABS warning light ON	10 – 14
Tc (A15 – 9) – GND (A15 – 15, A17 – 9, 10)	LG–R ↔ W–B	IG switch ON	8 – 14
Ts (A15 – 23) – GND (A15 – 15, A17 – 9, 10)	R–Y ↔ W–B	IG switch ON	8 – 14
FR+ (A15 – 17) – FR– (A15 – 18)	W ↔ B	IG switch ON, slowly turn right front wheel	AC generation
FL+ (A15 – 5) – FL– (A15 – 4)	R ↔ G	IG switch ON, slowly turn left front wheel	AC generation
RR+ (A16 – 9) – RR– (A16 – 10)	W ↔ B	IG switch ON, slowly turn right rear wheel	AC generation
RL+ (A16 – 2) – RL– (A16 – 1)	R ↔ G	IG switch ON, slowly turn left rear wheel	AC generation

MT (A15 – 14) – GND (A15 – 15, A17 – 9, 10)	R–W ↔ W–B	IG switch ON	Below 1.5
SRC1 (A17 – 5) – GND (A15 – 15, A17 – 9, 10)	B–R ↔ W–B	IG switch ON, TRAC OFF indicator light OFF	10 – 14
SRC2 (A17 – 6) – GND (A15 – 15, A17 – 9, 10)	B–Y ↔ W–B	IG switch ON, TRAC OFF indicator light OFF	10 – 14
SMC1 (A17 – 12) – GND (A15 – 15, A17 – 9, 10)	Y–R ↔ W–B	IG switch ON, TRAC OFF indicator light OFF	10 – 14
SMC2 (A17 – 6) – GND (A15 – 15, A17 – 9, 10)	Y–B ↔ W–B	IG switch ON, TRAC OFF indicator light OFF	10 – 14
NEO (A16 – 15) – GND (A15 – 15, A17 – 9, 10)	BR–W ↔ W–B	Idling	Pulse generation
EFI+ (A16 – 6) – GND (A15 – 15, A17 – 9, 10)	W ↔ W–B	IG switch ON	Pulse generation
EFI– (A16 – 14) – GND (A15 – 15, A17 – 9, 10)	B ↔ W–B	IG switch ON	Pulse generation
TRC+ (A16 – 13) – GND (A15 – 15, A17 – 9, 10)	G ↔ W–B	TRAC control active	Pulse generation
TRC– (A16 – 5) – GND (A15 – 15, A17 – 9, 10)	L ↔ W–B	TRAC control active	Pulse generation
IND (A16 – 3) – GND (A15 – 15, A17 – 9, 10)	LG ↔ W–B	IG switch ON, SLIP indicator light ON	Below 2.0
		IG switch ON, SLIP indicator light OFF	10 – 14
WT (A16 – 12) – GND (A15 – 15, A17 – 9, 10)	L ↔ W–B	IG switch ON, TRAC OFF indicator light ON	Below 2.0
		IG switch ON, TRAC OFF indicator light OFF	10 – 14
CSW (A16 – 11) – GND (A15 – 15, A17 – 9, 10)	LG ↔ W–B	IG switch ON, TRAC cut switch pushed in	Below 2.0
		IG switch ON, TRAC cut switch released	8 – 14

DI04I–04

PROBLEM SYMPTOMS TABLE

If a normal code is displayed during the DTC check but the problem still occurs, check the circuits for each problem symptom in the order given in the table below and proceed to the relevant troubleshooting page.

Symptom	Suspect Area	See page
ABS does not operate.	Only when 1. to 4. are all normal and the problem is still occurring, replace the ABS & TRAC ECU. 1. Check the DTC reconfirming that the normal code is output. 2. IG power source circuit 3. Speed sensor circuit 4. Check the ABS & TRAC actuator with a checker. If abnormal, check the hydraulic circuit for leakage (See page DI–623).	 DI–574 DI–598 DI–593 BR–61
ABS does not operate efficiently.	Only when 1. to 4. are all normal and the problem is still occurring, replace the ABS & TRAC ECU. 1. Check the DTC reconfirming that the normal code is output. 2. Speed sensor circuit. 3. Stop light switch circuit. 4. Check the ABS & TRAC actuator with a checker. If abnormal, check the hydraulic circuit for leakage (See page DI–623).	 DI–574 DI–593 DI–604 BR–61
ABS warning light abnormal.	1. ABS warning light circuit 2. ABS & TRAC ECU	DI–612 DI–610
DTC check cannot be done.	Only when 1. and 2. are all normal and the problem is still occurring, replace the ABS & TRAC ECU. 1. ABS warning light circuit 2. TRAC OFF indicator light circuit 3. Tc terminal circuit	 DI–612 DI–617 DI–621
Speed sensor signal check cannot be done.	1. Ts terminal circuit 2. ABS & TRAC ECU	DI–615 DI–610
TRAC does not operate.	Only when inspection circuits for each problem symptom are all normal and the problem is still occurring, replace the ABS & TRAC ECU. 1. Check the DTC, reconfirming that the normal code is output. 2. IG power source circuit 3. Check the hydraulic circuit for leakage 4. Speed sensor circuit	 DI–574 DI–598 DI–623 DI–593
SLIP indicator light abnormal.	SLIP indicator light circuit	DI–620
TRAC OFF indicator light abnormal.	Only when inspection circuits for each problem symptom are all normal and the problem is still occurring, replace the ABS & TRAC ECU. 1. TRAC OFF indicator light circuit 2. TRAC cut switch circuit	 DI–617 DI–617

DI04J–04

CIRCUIT INSPECTION

DTC	11, 12	ABS & TRAC Solenoid Relay Circuit

CIRCUIT DESCRIPTION

This relay supplies power to each ABS & TRAC solenoid. After the ignition switch is turned ON, if the initial check is OK, the relay goes on.

DTC No.	DTC Detecting Condition	Trouble Area
11	Condition 1. to 3. are detected: 1. Malfunction of solenoid relay monitor 2. Battery voltage will not exceed more than 17.0 V within 2.16 sec. 3. Battery voltage will not become less than 9.5 V within 2.16 sec., or after the solenoid relay is ON and AST voltage of ECU terminal does not become 8.0 V or more.	●ABS & TRAC solenoid relay ●ABS & TRAC solenoid relay circuit ●ECU
12	Solenoid relay is OFF in the midst of premain routine, and AST voltage of ECU terminal is 8.0 V or more, which continues for 2.04 sec. or more.	

Fail safe function:

If any trouble occurs in the ABS & TRAC solenoid relay circuit, the ECU cuts off current to the ABS & TRAC solenoid relay and prohibits ABS control and TRAC control.

WIRING DIAGRAM

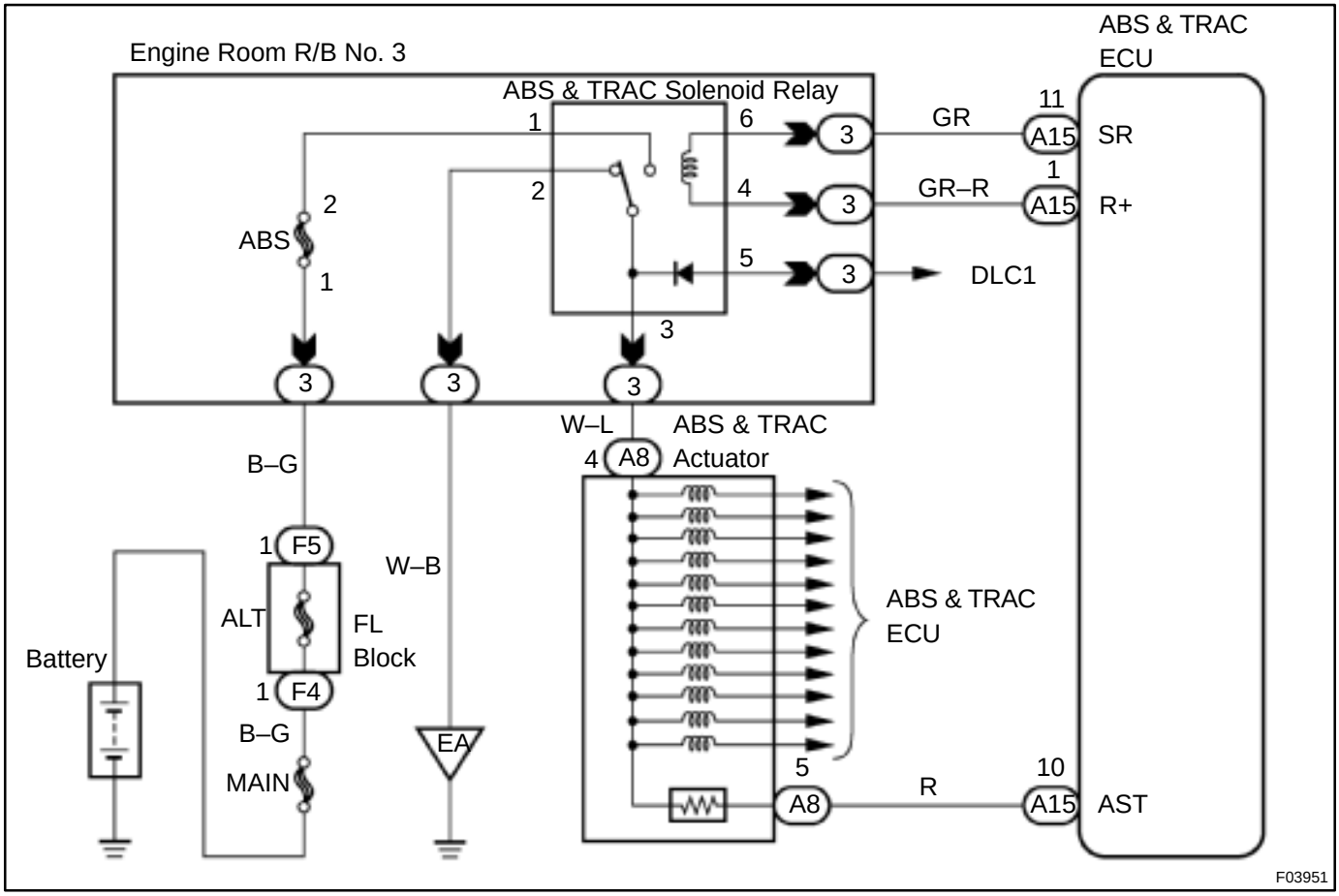

INSPECTION PROCEDURE

1	**Check voltage between terminals 1 and 2 of Engine Room R/B No. 3 (for ABS & TRAC solenoid relay).**

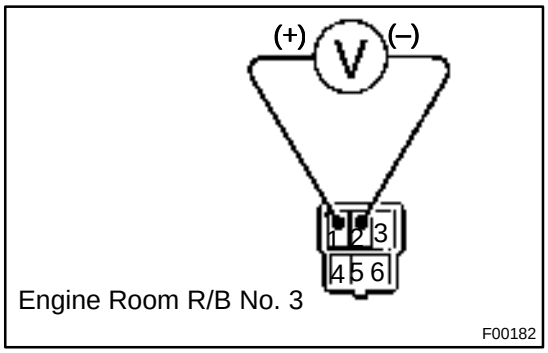

PREPARATION:
Remove ABS & TRAC solenoid relay from Engine Room R/B No. 3.

CHECK:
Measure the voltage between terminals 1 and 2 of Engine Room R/B No. 3 (for ABS & TRAC solenoid relay).

OK:

Voltage: 10 – 14 V

NG	**Check and repair harness or connector.**

OK

2	**Check continuity between terminal 3 of ABS & TRAC solenoid relay and terminal AST of ABS & TRAC ECU.**

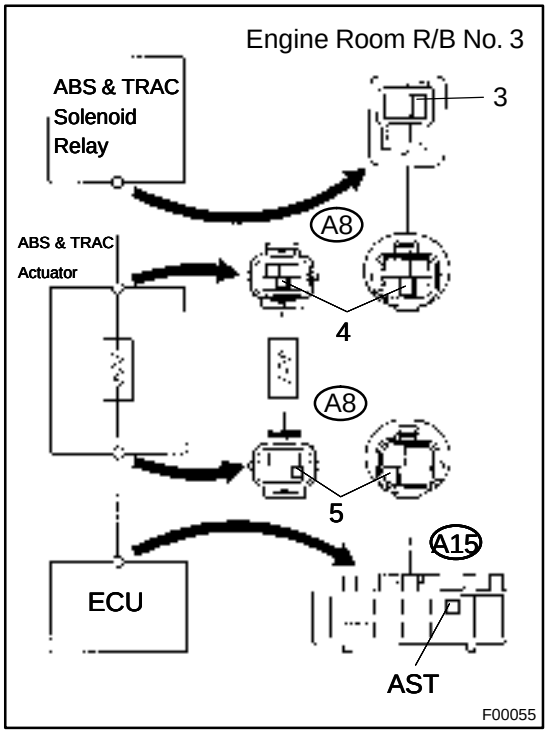

CHECK:
Check continuity between terminal 3 of Engine Room R/B No. 3 (for ABS solenoid relay) and terminal AST of ABS & TRAC ECU.

OK:

Continuity

HINT:
There is a resistance of 4 ~ 6 Ω between terminals A8 – 4 and A8 – 5 of ABS actuator.

NG	**Repair or replace harness or ABS & TRAC actuator.**

OK

3	Check ABS & TRAC solenoid relay.

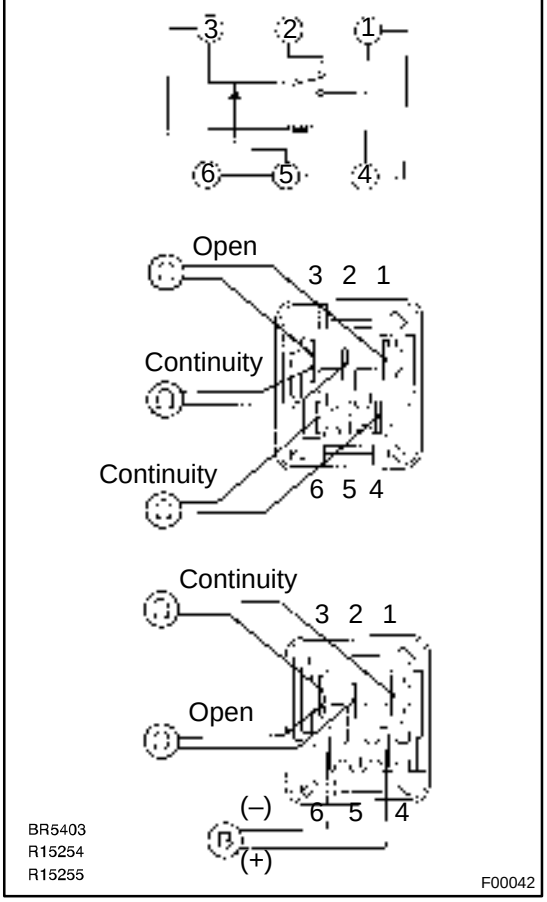

CHECK:

Check continuity between each terminal of ABS & TRAC solenoid relay.

OK:

Terminals 4 and 6	Continuity (Reference value 80 Ω)
Terminals 2 and 3	Continuity
Terminals 1 and 3	Open

CHECK:

(a) Apply battery positive voltage between terminals 4 and 6.
(b) Check continuity between each terminal of ABS & TRAC solenoid relay.

OK:

Terminals 2 and 3	Open
Terminals 1 and 3	Continuity

NG → **Replace ABS & TRAC solenoid relay.**

OK

4	Check for open and short circuit in harness and connector between ABS & TRAC solenoid relay and ABS & TRAC ECU (See page IN–31).

NG → **Repair or replace harness or connector.**

OK

If the same code is still output after the DTC is deleted, check the contact condition of each connection.
If the connections are normal, the ECU may be defective.

DI04K–04

DTC	13, 14	ABS & TRAC Motor Relay Circuit

CIRCUIT DESCRIPTION

The ABS & TRAC motor relay supplies power to the ABS & TRAC pump motor. While the ABS is activated, the ECU switches the ABS & TRAC motor relay ON and operates the ABS & TRAC pump motor.

DTC No.	DTC Detecting Condition	Trouble Area
13	Conditions 1. to 3. are detected: 1. Malfunction of motor relay monitor 2. Battery voltage will not exceed more than 17.0 V within 2.16 sec. 3. Battery voltage will not become less than 9.5 V within 2.16 sec., or after the motor relay is ON and motor relay monitor does not ON.	●ABS & TRAC motor relay ●ABS & TRAC motor relay circuit ●ECU
14	Motor relay is OFF, and motor relay monitor is ON , which continues for 20.16 sec. or more.	

Fail safe function:
If any trouble occurs in the ABS & TRAC motor relay circuit, the ECU cuts off current to the ABS & TRAC solenoid relay and prohibits ABS control and TRAC control.

WIRING DIAGRAM

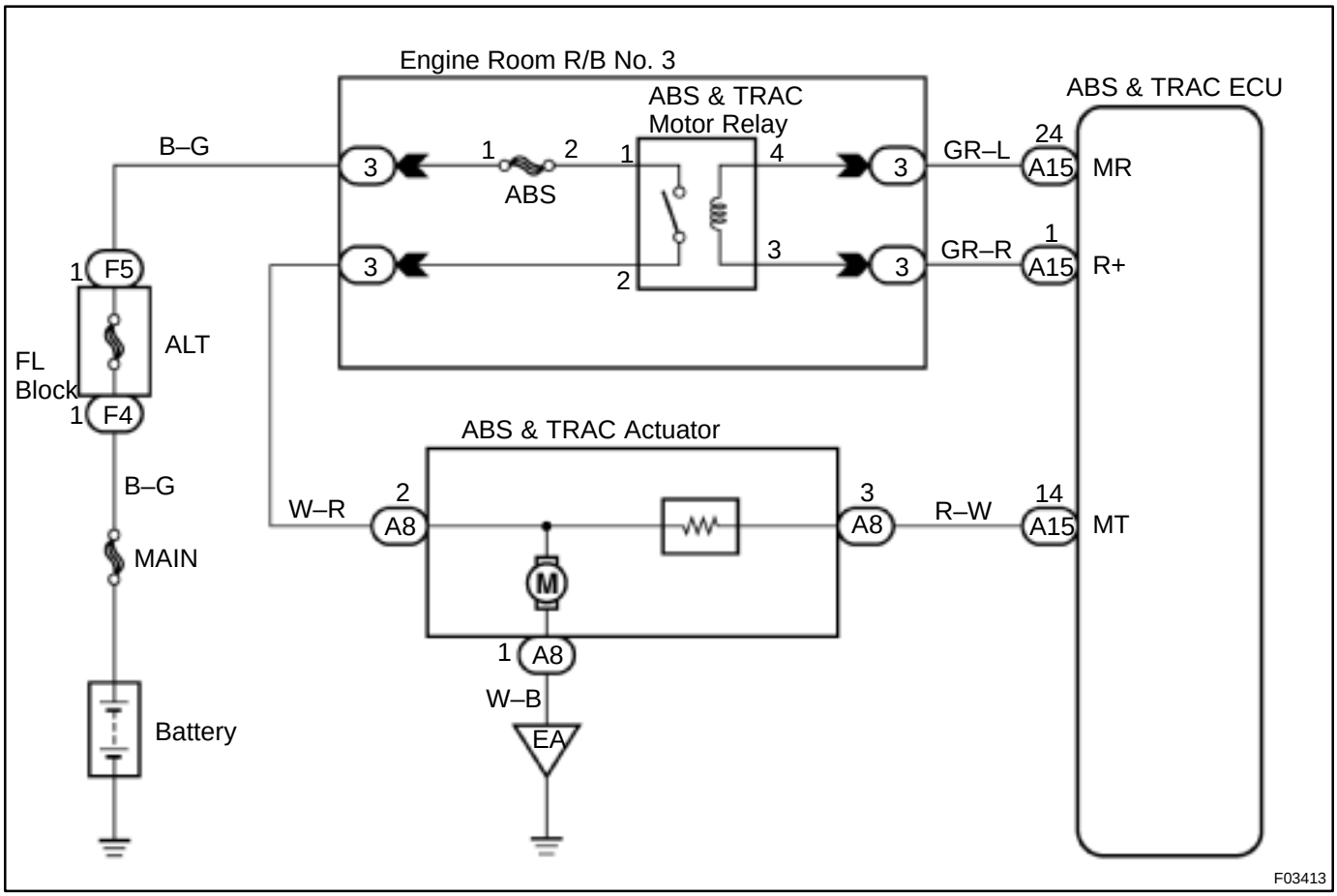

INSPECTION PROCEDURE

1	**Check voltage between terminal 1 of Engine Room R/B No. 3 (for ABS & TRAC motor relay) and body ground.**

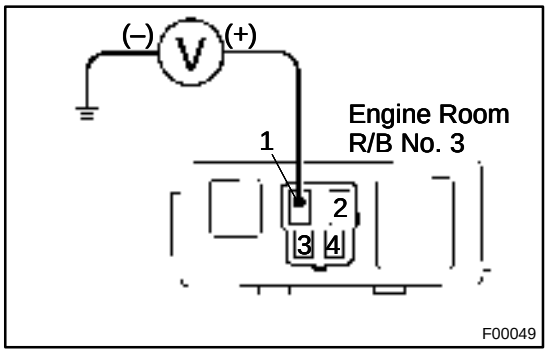

PREPARATION:
Remove ABS & TRAC motor relay from Engine Room R/B No. 3.

CHECK:
Measure voltage between terminal 1 of Engine Room R/B No. 3 (for ABS & TRAC motor relay) and body ground.

OK:

Voltage: 10 – 14 V

NG → **Check and repair harness or connector.**

OK ↓

2	**Check continuity between terminal 2 of ABS & TRAC motor relay and terminal MT of ABS & TRAC ECU.**

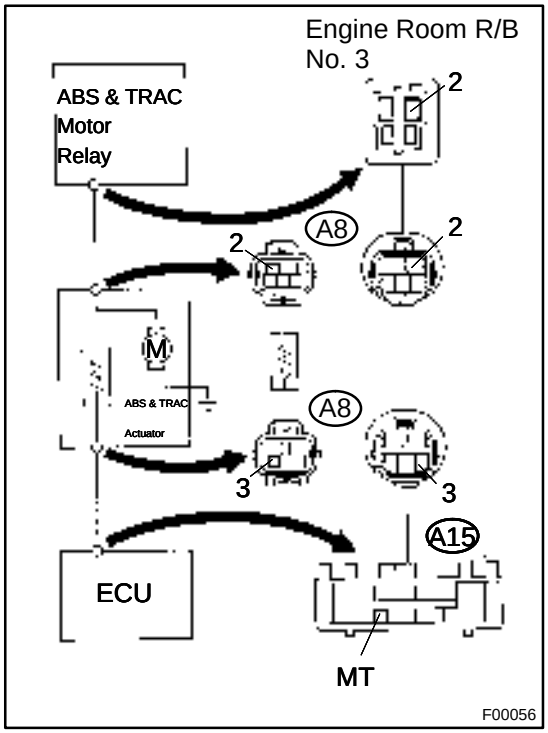

CHECK:
Check continuity between terminal 2 of Engine Room R/B No. 3 (for ABS & TRAC motor relay) and terminal MT of ABS & TRAC ECU.

OK:

Continuity

HINT:
There is a resistance of 4 ~ 6 Ω between terminals A8 – 2 and A8 – 3 of ABS & TRAC actuator.

NG → **Repair or replace harness or ABS & TRAC actuator.**

OK ↓

3	Check ABS & TRAC motor relay.

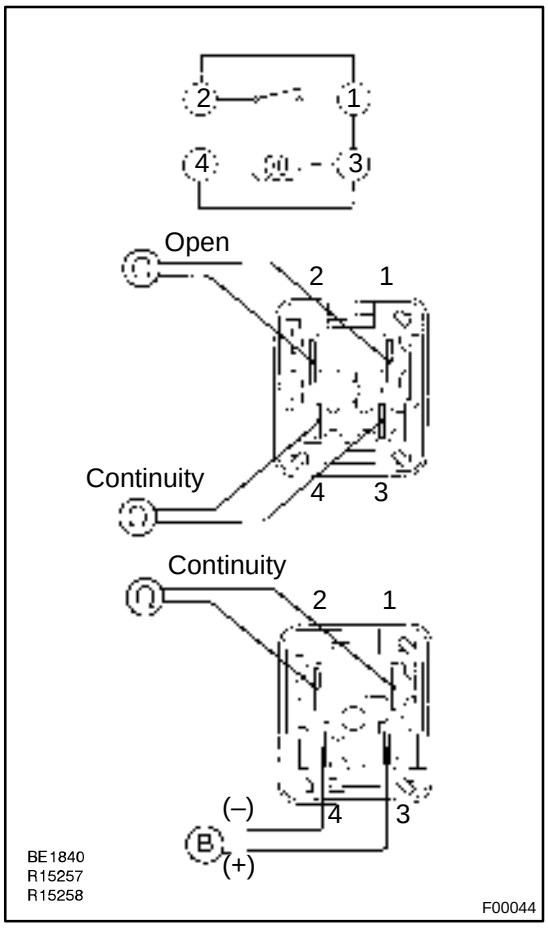

CHECK:

Check continuity between each terminal of ABS & TRAC motor relay.

OK:

Terminals 3 and 4	Continuity (Reference value 62 Ω)
Terminals 1 and 2	Open

CHECK:

(a) Apply battery positive voltage between terminals 3 and 4.
(b) Check continuity between terminals of ABS & TRAC motor relay.

OK:

Terminals 1 and 2	Continuity

NG → **Replace ABS & TRAC motor relay.**

OK

4	Check for open and short circuit in harness and connector between ABS & TRAC motor relay and ABS & TRAC ECU (See page IN–31).

NG → **Repair or replace harness or connector.**

OK

If the same code is still output after the DTC is deleted, check the contact condition of each connection.
If the connections are normal, the ECU may be defective.

DI04L–04

DTC	21 to 28	ABS & TRAC Actuator Solenoid Circuit

CIRCUIT DESCRIPTION

This solenoid goes on when signals are received from the ECU and controls the pressure acting on the wheel cylinders thus controlling the braking force.

DTC No.	DTC Detecting Condition	Trouble Area
21	Conditions 1. and 2. or 3. continue for 0.48 sec. or more: 1. Recovery prohibit run pulse is not output, solenoid relay is ON, AST voltage of ECU terminal is 8.0 V or more, and solenoid output has no change between the last time and this time. 2. Solenoid output is ON, pressure holding solenoid monitor voltage is more than 1.0 V or pressure eduction solenoid monitor voltage is more than 1.5 V. 3. Solenoid output is OFF, solenoid monitor voltage is more than –1.0 V AST voltage of ECU.	●ABS actuator ●SFRR or SFRH circuit ●ECU
22		●ABS actuator ●SFLR or SFLH circuit ●ECU
23		●ABS actuator ●SRRR or SRRH circuit ●ECU
24		●ABS actuator ●SRLR or SRLH circuit ●ECU
25		●ABS actuator ●SMC1 circuit ●ECU
26		●ABS actuator ●SMC2 circuit ●ECU
27		●ABS actuator ●SRC1 circuit ●ECU
28		●ABS actuator ●SRC2 circuit ●ECU

Fail safe function:

If any trouble occurs in the actuator solenoid circuit, the ECU cuts off current to the ABS & TRAC solenoid relay and prohibits ABS control and TRAC control.

WIRING DIAGRAM

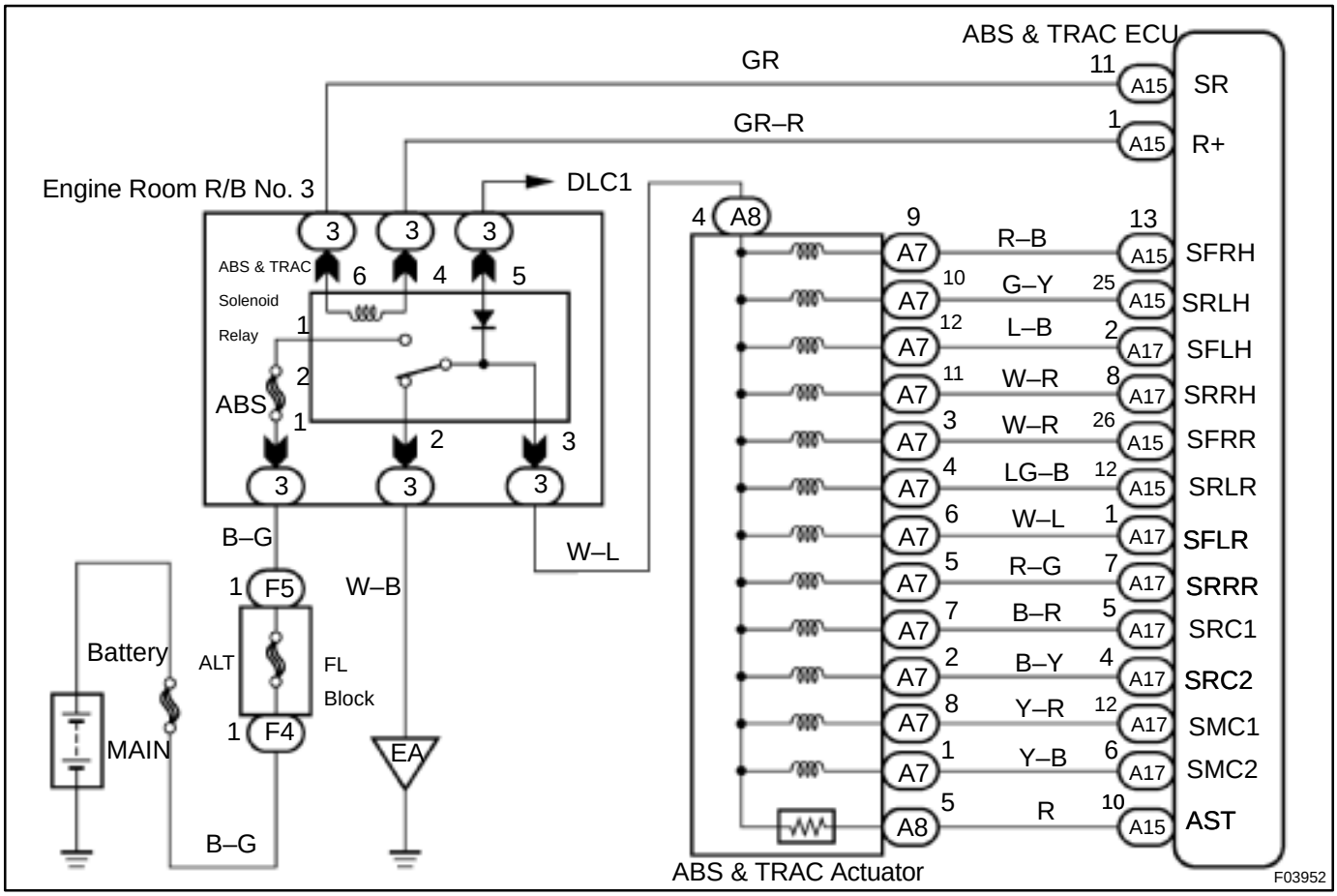

INSPECTION PROCEDURE

1	**Check ABS & TRAC actuator solenoid.**

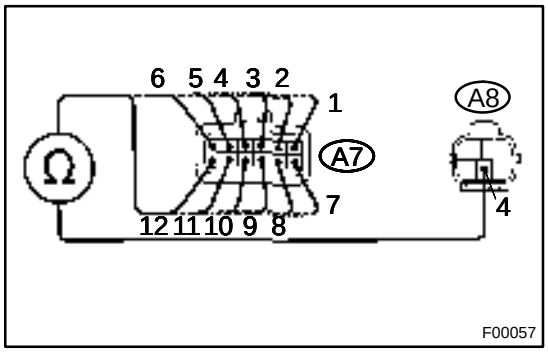

PREPARATION:
Disconnect the 2 connectors from ABS & TRAC actuator.

CHECK:
Check continuity between terminals A8 – 4 and A7 – 1, 2, 3, 4, 5, 6, 7, 8, 9, 10, 11, 12 of ABS & TRAC actuator connector.

OK:

Continuity

HINT:
Resistance of each solenoid coil is 1.2 Ω.

NG → **Replace ABS & TRAC actuator.**

OK

2	**Check for open and short circuit in harness and connector between ABS & TRAC ECU and actuator (See page IN–31).**

NG → **Repair or replace harness or connector.**

OK

If the same code is still output after the DTC is deleted, check the contact condition of each connection.
If the connections are normal, the ECU may be defective.

DI1JP–03

DTC	31, 32, 33, 34	Speed Sensor Circuit

CIRCUIT DESCRIPTION

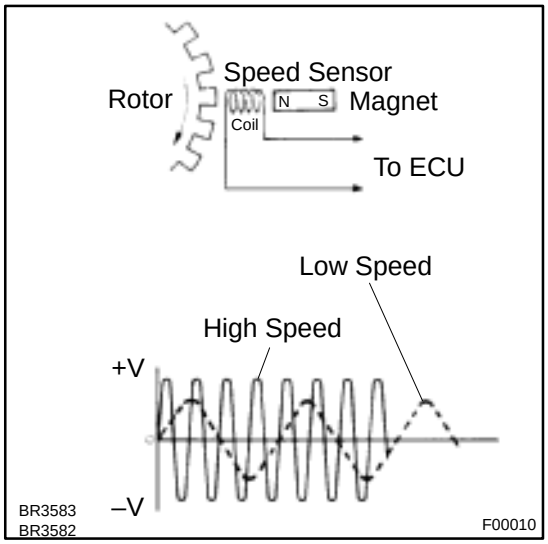

The speed sensor detects wheel speed and sends the appropriate signals to the ECU. These signals are used to control the ABS and TRAC system. The front and rear rotors each have 48 serrations.

When the rotors rotate, the magnetic field emitted by the permanent magnet in the speed sensor generates an AC voltage. Since the frequency of this AC voltage changes in direct proportion to the speed of the rotor, the frequency is used by the ECU to detect the speed of each wheel.

DTC No.	DTC Detecting Condition	Trouble Area
31, 32, 33, 34	Detection of any of conditions from 1. through 3.: 1. ABS is in non–operation, wheel speed is 10 km/h or more, one eighth of maximum wheel speed is greater than the minimum wheel speed, one eighth of maximum wheel speed is smaller than the rear maximum wheel speed or momentary interruption of both the rear wheels are shown in the 15 sec. or more continuously. 2. ABS is in non–operation, momentary interruption of speed sensor occurs 7 times or more in the mean time of switching the ignition switch ON and OFF or vehicle speed is 20 km/h (12 mph) or more and the condition of noise interference or non–noise interference occurs 75 times or more within 5 sec. 3. Vehicle is at a stop, malfunction signal of vehicle speed sensor hardware open circuit is ON for 1.02 sec. continuously since starting the checking of a certain vehicle.	●Right front, left front, right rear, left rear speed sensor ●Each speed sensor circuit ●Speed sensor rotor ●ECU

HINT:

- DTC No. 31 is for the right front speed sensor.
- DTC No. 32 is for the left front speed sensor.
- DTC No. 33 is for the right rear speed sensor.
- DTC No. 34 is for the left rear speed sensor.

Fail safe function:

If any trouble occurs in the speed sensor circuit, the ECU cuts off current to the ABS & TRAC solenoid relay and prohibits ABS control and TRAC control.

WIRING DIAGRAM

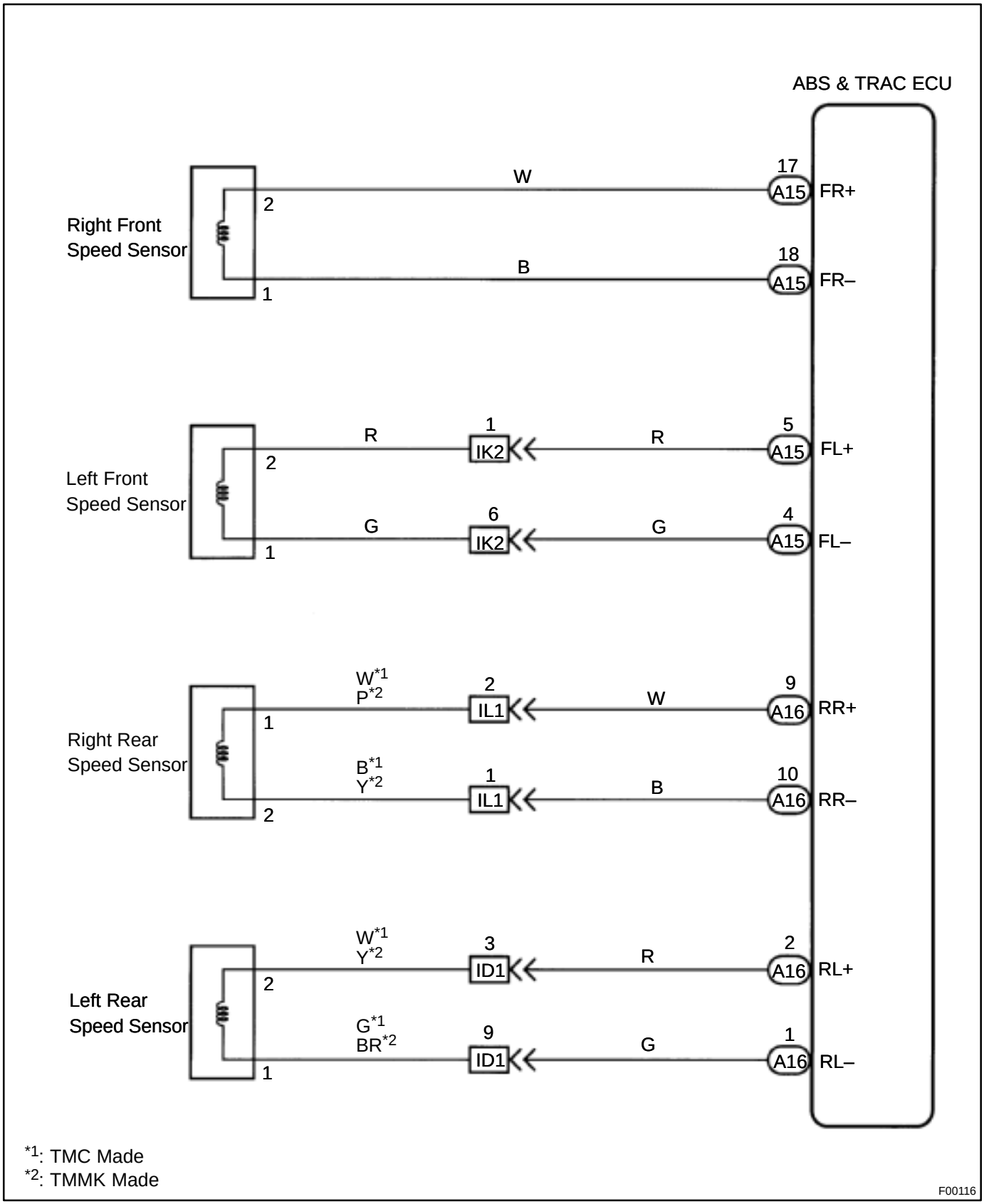

*1: TMC Made
*2: TMMK Made

F00116

INSPECTION PROCEDURE

1	**Check speed sensor.**

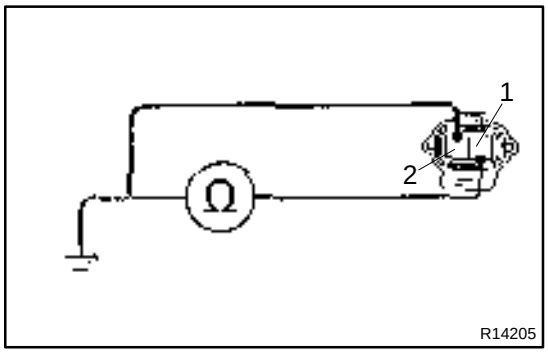

Front:

PREPARATION:

(a) Remove the front fender liner.

(b) Disconnect the speed sensor connector.

CHECK:

Measure resistance between terminals 1 and 2 of speed sensor connector.

OK:

Resistance: 0.6 – 2.5 kΩ

CHECK:

Measure resistance between terminals 1 and 2 of speed sensor connector and body ground.

OK:

Resistance: 1 MΩ or higher

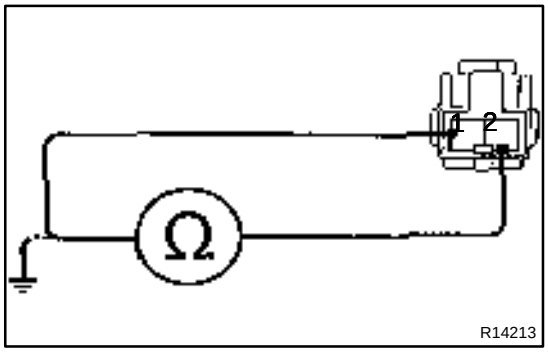

Rear:

PREPARATION:

(a) Remove the seat cushion and side seatback.

(b) Disconnect the speed sensor connector.

CHECK:

Measure resistance between terminals 1 and 2 of speed sensor connector.

OK:

Resistance: 1.2 – 2.3 kΩ

CHECK:

Measure resistance between terminals 1 and 2 of speed sensor connector and body ground.

OK:

Resistance: 1 MΩ or higher

NG	**Replace speed sensor.**

NOTICE:

Check the speed sensor signal last (See page DI–574).

OK

2	**Check for open and short circuit in harness and connector between each speed sensor and ECU (See page IN–31).**

NG → **Repair or replace harness or connector.**

OK

3	**Check sensor installation.**

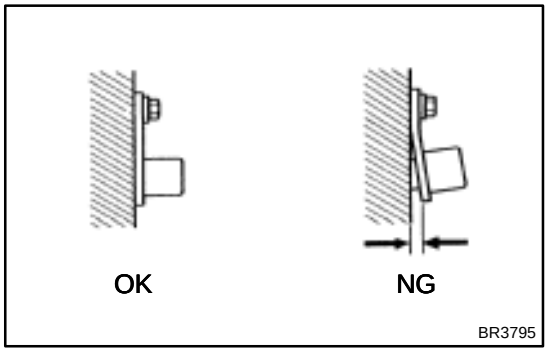

CHECK:
Check the speed sensor installation.
OK:

The installation bolt is tightened properly and there is no clearance between the sensor and steering knuckle or rear axle carrier.

NG → **Replace speed sensor.**

NOTICE:
Check the speed sensor signal last (See page DI–574).

OK

4	**Check speed sensor and sensor rotor serrations.**

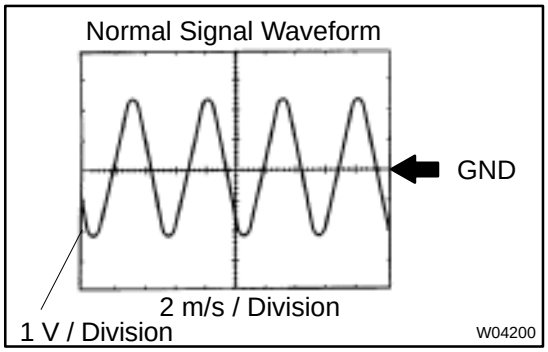

REFERENCE: INSPECTION USING OSCILLOSCOPE
PREPARATION:
(a) Remove the ABS & TRAC ECU.
(b) Connect the oscilloscope to the terminals FR+, FL+, RR+ or RL+ and GND of the ABS & TRAC ECU.

CHECK:
Drive the vehicle with about 30 km/h (19 mph), and check the signal waveform.

OK → **Check and replace ABS & TRAC ECU.**

NG

5	Check sensor rotor and sensor tip.

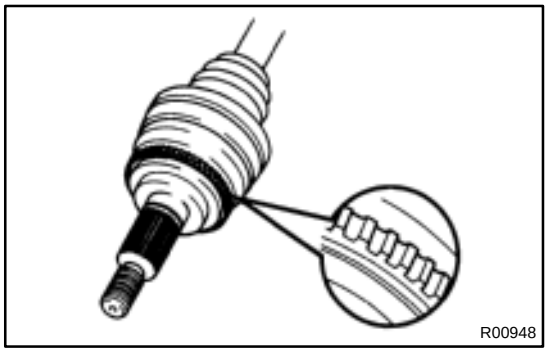

Front:

PREPARATION:

Remove front drive shaft (See page SA–26).

CHECK:

Check sensor rotor serrations.

OK:

No scratches , missing teeth or foreign objects.

PREPARATION:

Remove the front speed sensor (See page BR–68).

CHECK:

Check the sensor tip.

OK:

No scratches or foreign objects on the sensor tip.

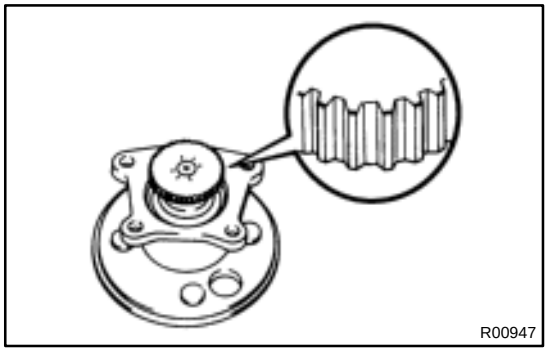

Rear:

PREPARATION:

Remove the axle hub (See page SA–52).

CHECK:

Check the sensor rotor serrations.

OK:

No scratches , missing teeth or foreign objects.

PREPARATION:

Remove the rear speed sensor (See page BR–71).

CHECK:

Check the sensor tip.

OK:

No scratches or foreign objects on the sensor tip.

NG → **Replace sensor rotor or speed sensor.**

NOTICE:

Check the speed sensor signal last. (See page DI–574).

OK

Check and replace ABS & TRAC ECU.

DI04N–04

DTC	41	IG Power Source Circuit

CIRCUIT DESCRIPTION

This is the power source for the ECU, hence the actuators.

DTC No.	DTC Detecting Condition	Trouble Area
41	Detection of any conditions from 1. through 3.: 1. Vehicle speed is 3 km/h (1.9 mph) or more and battery voltage is less than 9.5 V continues for 10 sec. or more. 2. Battery voltage has never exceeded more than 17.0 V and has become less than 9.5 V within 2.16 sec., under malfunction of solenoid relay monitor after the solenoid relay is ON, at ECU AST terminal voltage of ECU has become 8.0 V or more or under malfunction of motor relay monitor and after the motor relay is ON, motor relay monitor has become ON. 3. Battery voltage is more than 17.0 V , which continues for 1.2 sec. or more or battery voltage has become more than 17.0 V within 2.16 sec. and solenoid or motor relay monitor is under malfunction condition.	●Battery ●Charging system ●Power source circuit ●ECU

Fail safe function:

If any trouble occurs in the power source circuit, the ECU cuts off current to the ABS & TRAC solenoid relay and prohibits ABS control and TRAC control.

WIRING DIAGRAM

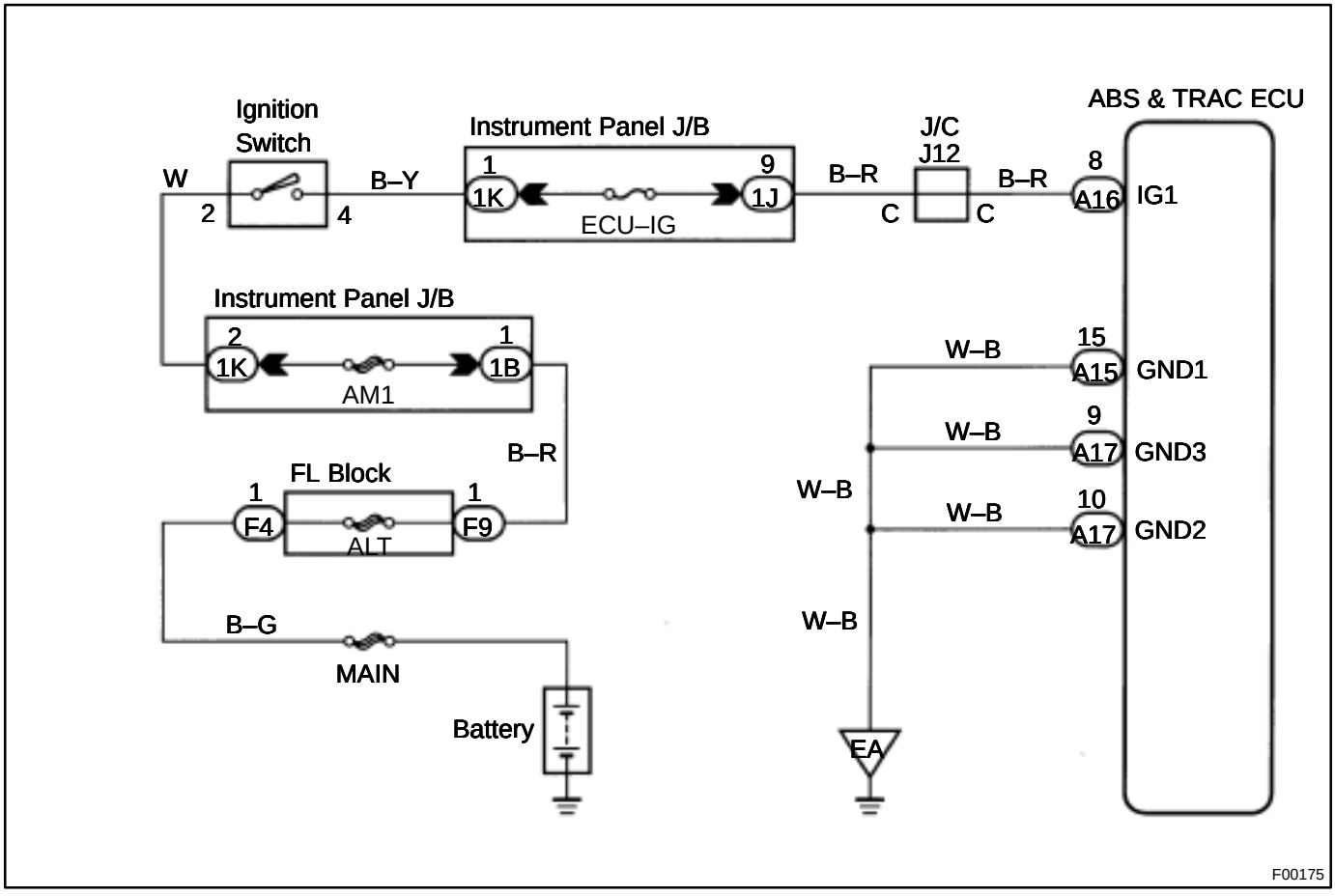

INSPECTION PROCEDURE

1	**Check ECU–IG fuse.**

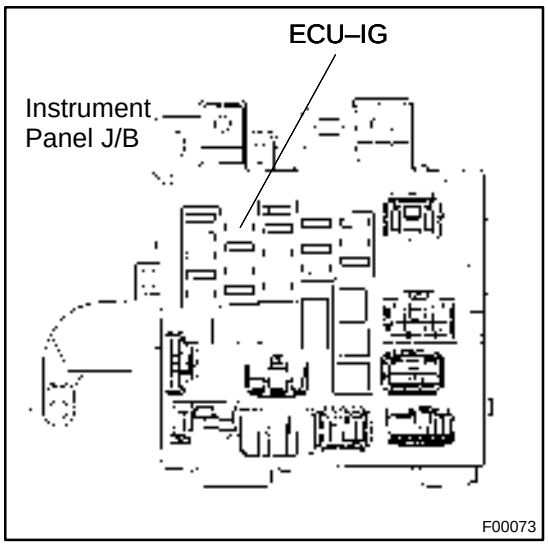

PREPARATION:
Remove ECU–IG fuse from Instrument Panel J/B.
CHECK:
Check continuity of ECU–IG fuse.
OK:
Continuity

NG → **Check for short in all the harness and components connected to ECU–IG fuse (See attached wiring diagram).**

OK

2	**Check battery positive voltage.**

OK:
Voltage: 10 – 14 V

NG → **Check and repair the charging system**
5S–FE engine: (See page CH–1)
1MZ–FE engine: (See page CH–1).

OK

3	**Check voltage between terminals IG1 and GND of ABS & TRAC ECU connector.**

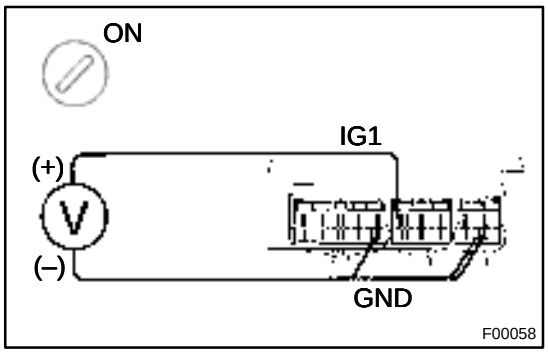

PREPARATION:
Remove ABS & TRAC ECU with connectors still connected.
CHECK:
(a) Turn the ignition switch ON.
(b) Measure voltage between terminals IG1 and GND of ABS & TRAC ECU connector.
OK:
Voltage: 10 – 14 V

OK	**Check and replace ABS & TRAC ECU.**

NG

4	**Check continuity between terminals GND of ABS & TRAC ECU connector and body ground.**

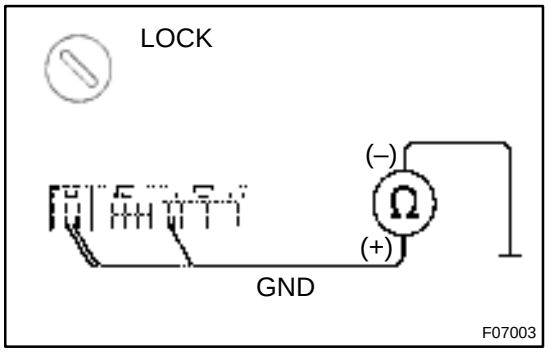

PREPARATION:
Disconnect the connector from the ABS & TRAC ECU.
CHECK:
Measure resistance between terminal GND of ABS & TRAC ECU connector and body ground.
OK:
Resistance: 1 Ω or less

NG	**Repair or replace harness or connector.**

OK

Check for open circuit in harness and connector between ABS & TRAC ECU and battery (See page IN–31).

DI04O–04

DTC	43	ABS Control System Malfunction

CIRCUIT DESCRIPTION

DTC No.	DTC Detecting Condition	Trouble Area
43	Detection of any conditions from 1. through 8.: 1. During TRAC is in non–operation and DTC of ABS is output, but TRAC is not during initial lamp checking, terminal WA of ECU is ON and engine speed is 500 rpm or more , which continues for 1 sec. or more. 2. Solenoid relay circuit is open or short. 3. Motor relay circuit is open or short. 4. ABS solenoid circuit is open or short. 5. TRAC solenoid circuit is open or short. 6. Speed sensor is under malfunction condition. 7. IG power source is down or raised. 8. Pump motor is locked.	●ABS control system

INSPECTION PROCEDURE

1	**Check the DTC for the ABS (See page DI–574).**

***1** → **Repair ABS control system according to the code output.**

***2**

Check for ECU connected to malfunction indicator lamp.

*1: Output NG code
*2: Malfunction indicator lamp remains ON.

DTC	44	NE Signal Circuit

CIRCUIT DESCRIPTION

The ABS & TRAC ECU receives engine speed signals (NE signals) from the ECM.

DTC No.	DTC Detecting Condition	Trouble Area
44	Condition 1. or 2. is detected: 1. TRAC is in operation and engine speed is 0 rpm continues for 2.4 sec. or more. 2. TRAC is in non–operation, sift lever is not in P or N position, both the front right and left wheels' speed is 30 km/h (19 mph) or more, engine speed is 0 rpm and does not have communication malfunction, and malfunction information of engine system is OFF.	●NEO circuit ●ECM ●ECU

WIRING DIAGRAM

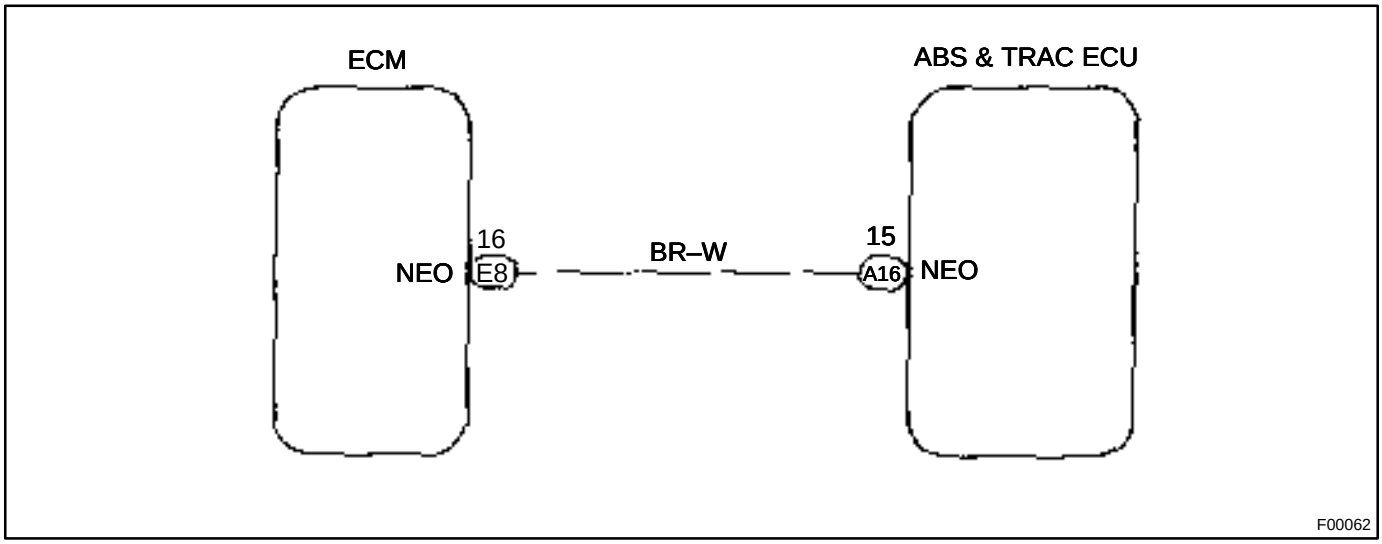

INSPECTION PROCEDURE

1	**Check for open and short circuit in harness and connector between terminal NEO of ABS & TRAC ECU and terminal NEO of ECM (See page IN–31).**

NG → **Repair or replace harness or connector.**

OK

2	**Check voltage between terminal NEO of ABS & TRAC ECU and body ground.**

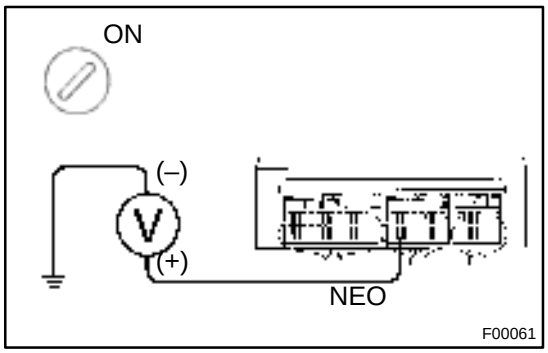

PREPARATION:

(a) Remove ABS & TRAC ECU with connectors still connected.

(b) Turn ignition switch ON.

CHECK:

Measure voltage between terminal NEO of ABS & TRAC ECU and body ground for the engine conditions below.

OK:

Engine condition	Voltage
OFF (IG ON)	3 – 6 V or below 1 V
ON (Idling)	2 – 3 V (Pulse)

(Reference)

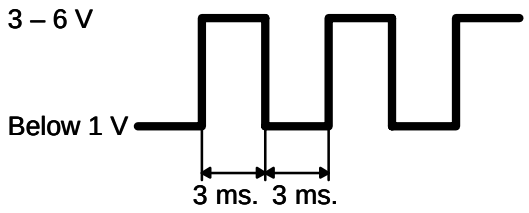

NG → **Check and replace ABS & TRAC ECU or ECM.**

OK

If the same code is still output after the DTC is deleted, check the contact condition of each connection.

DI04Q–04

DTC	49	Stop Light Switch Circuit

CIRCUIT DESCRIPTION

DTC No.	DTC Detecting Condition	Trouble Area
49	Battery voltage has never exceeded more than 17.0 V and become less than 9.5 V within 2.16 sec. and the STP terminal voltage of ECU is under open circuit detecting limits continues for 3 sec. or more.	●Stop light switch ●Stop light switch circuit ●ECU

WIRING DIAGRAM

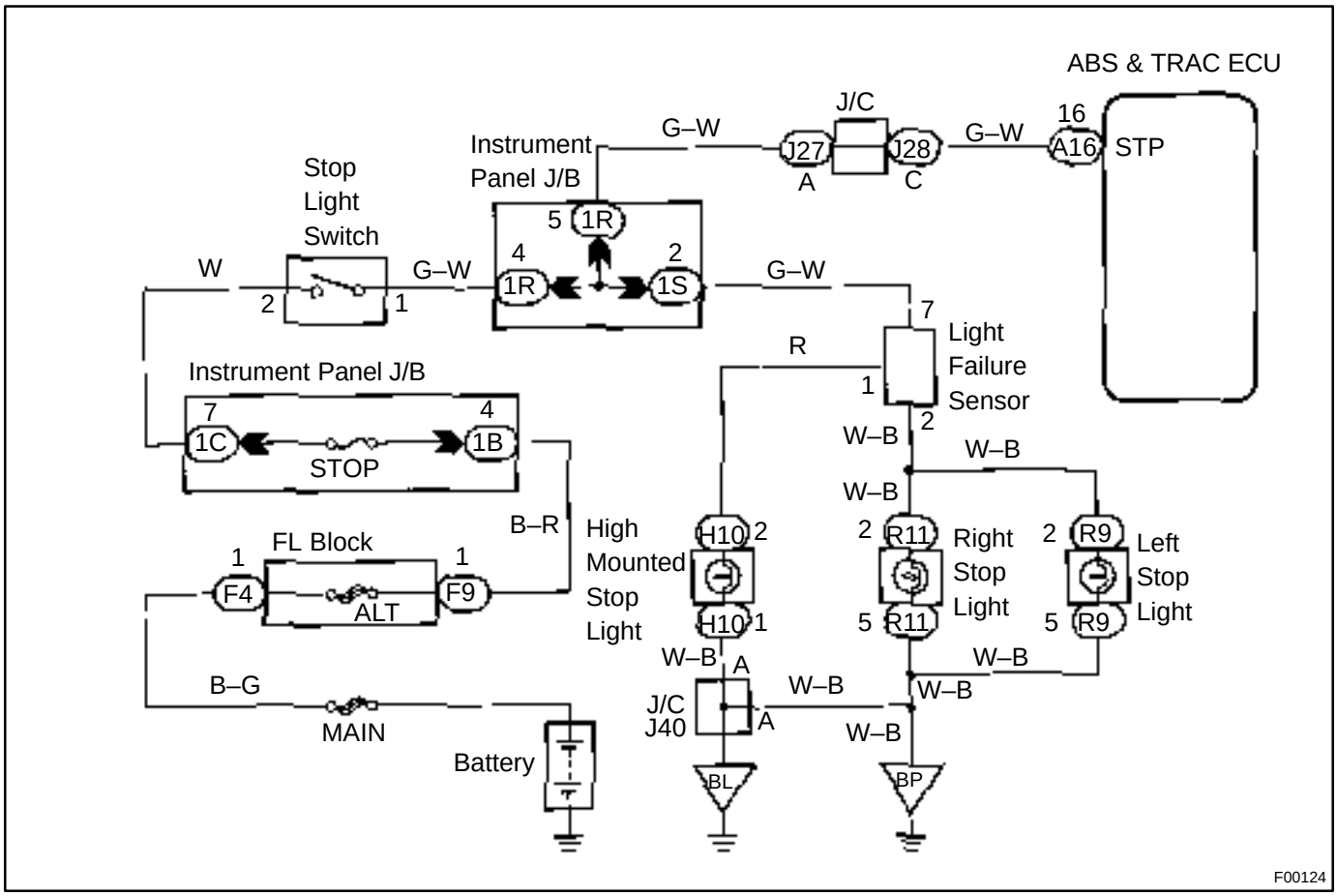

INSPECTION PROCEDURE

1	**Check voltage between terminal STP of ABS & TRAC ECU and body ground.**

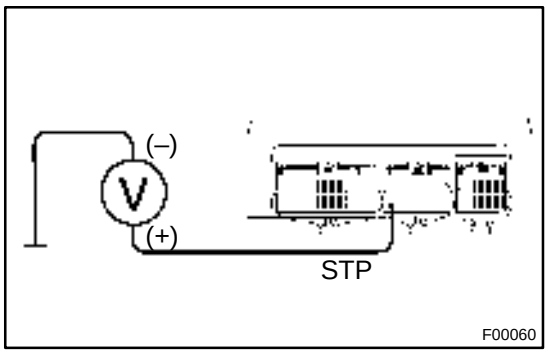

PREPARATION:
Remove ABS & TRAC ECU with connectors still connected.
CHECK:
Measure voltage between terminal STP of ABS & TRAC ECU and body ground when brake pedal is depressed.
OK:
Voltage: 8 – 14 V

OK → **Check and replace ABS & TRAC ECU.**

NG

2	**Check for open circuit in harness and connector between ABS & TRAC ECU and stop light switch (See page IN–31).**

NG → **Repair or replace harness or connector.**

OK

Proceed to next circuit inspection shown on problem symptoms table (See page DI–583).

DI4KX–01

DTC	51	ABS Pump Motor Lock

CIRCUIT DESCRIPTION

DTC No.	DTC Detecting Condition	Trouble Area
51	In the midst of initial check, after the current flows to the motor for 3 sec. and motor relay is turned OFF , then within 0.66 sec., the condition that the motor relay monitor is OFF continues for 0.24 sec. or more.	●ABS pump motor

Fail safe function:
If any trouble occurs in the ABS & TRAC pump motor, the ECU cuts off current to the ABS & TRAC solenoid relay and prohibits ABS control and TRAC control.

WIRING DIAGRAM

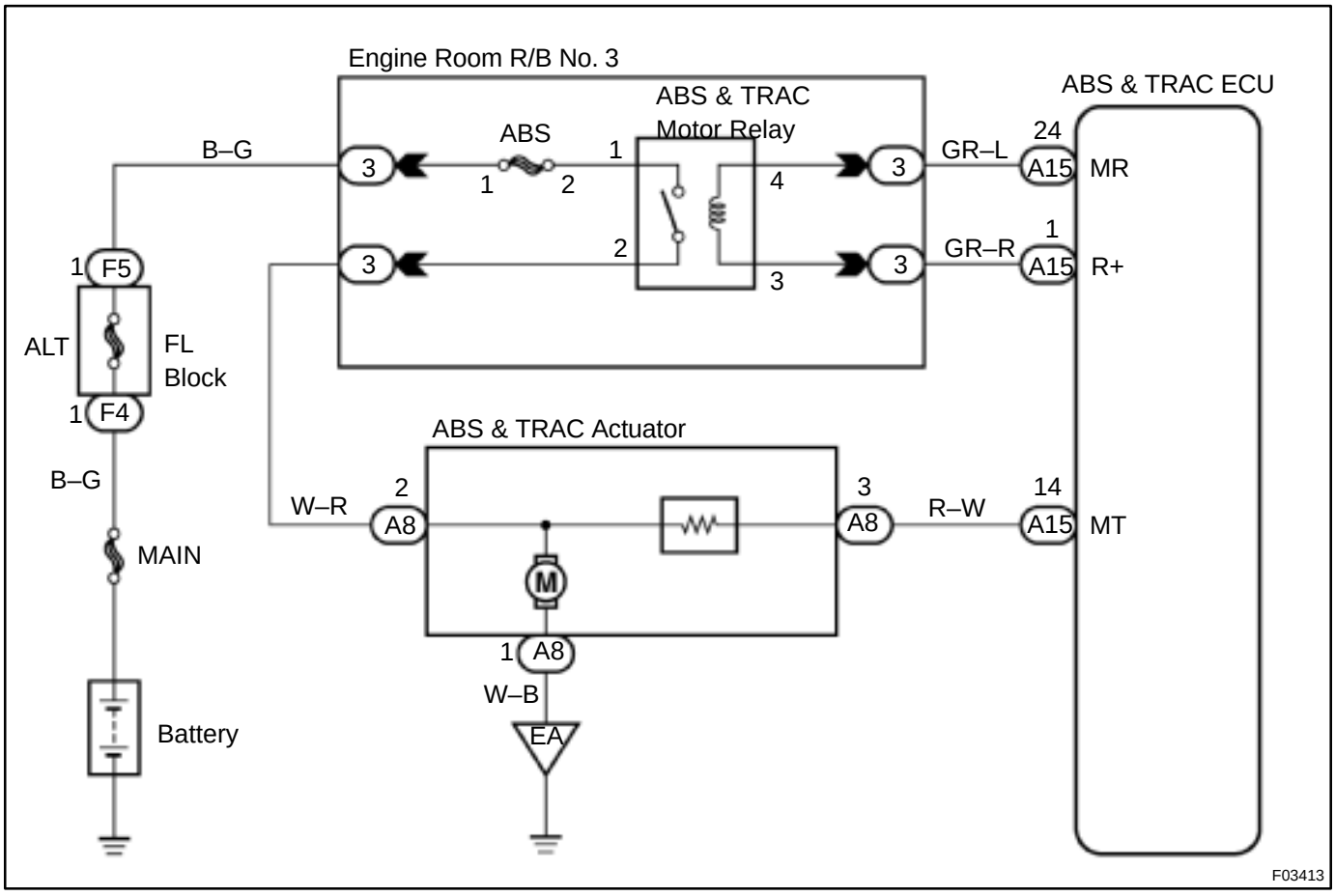

INSPECTION PROCEDURE

1	**Check operation of ABS & TRAC pump motor.**

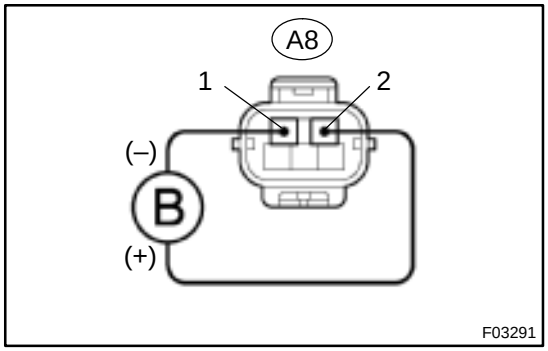

PREPARATION:

Disconnect the ABS & TRAC actuator connector.

CHECK:

Connect positive ~ lead to terminal A8 – 2 and negative > lead to terminal A8 – 1 of the ABS & TRAC actuator connector, check that the pump motor is operates.

OK

Check for open circuit in harness and connector between ABS & TRAC motor relay, ABS & TRAC actuator and ECU (See page IN–31).

NG

Replace ABS & TRAC actuator.

DI04S–04

DTC	53	ECM Communication Circuit Malfunction

CIRCUIT DESCRIPTION

This circuit is used to send TRAC control information from the ABS & TRAC ECU to the ECM (TRC+, TRC–), and engine control information from the ECM to the ABS & TRAC ECU (EFI+, EFI–).

DTC No.	DTC Detecting Condition	Trouble Area
53	ECM communication data malfunction is detected.	●TRC+ or TRC– circuit ●EFI+ or EFI– circuit ●ECM ●ECU

WIRING DIAGRAM

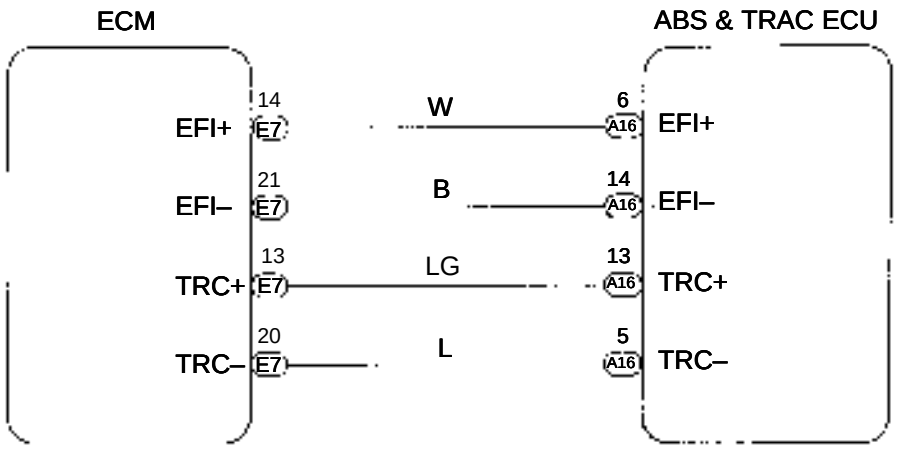

F00063

INSPECTION PROCEDURE

1	**Check for open and short circuit in harness and connector between terminals EFI+, EFI–, TRC+, TRC– of ABS & TRAC ECU and ECM (See page IN–31).**

NG → **Repair or replace harness or connector.**

OK

Check and replace ECM or ABS & TRAC ECU.

DI04T–04

DTC	61	Engine Control System Malfunction

CIRCUIT DESCRIPTION

If any trouble occurs in the engine control system, the ECU prohibits TRAC control.

DTC No.	DTC Detection Condition	Trouble Area
61	Conditions 1. and 2. are detected: 1. ECM communication is normal, malfunction information of engine system is ON, and engine speed is 500 rpm or more , which continues for 0.48 sec. or more, and TRAC operation start condition is concluded. 2. ECM communication is normal, malfunction information of engine system is ON, engine speed is 500 rpm and more which continues for 1 sec. or more, and the engine system memorizes DTC.	●Engine control system

INSPECTION PROCEDURE

1	Check the DTC for the engine (See page DI–197).

*1 → Repair engine control system according to the code output.

*2

Check for ECU connected to malfunction indicator light.

*1: Output NG code
*2: Malfunction indicator light remains ON.

DI1JQ–03

DTC	Always ON	ABS & TRAC ECU Malfunction

CIRCUIT DESCRIPTION

DTC No.	DTC Detecting Condition	Trouble Area
Always ON	ABS & TRAC ECU internal malfunction is detected.	●ECU

Fail safe function:
If any trouble occurs in the power source circuit, the ECU cuts off current to the ABS & TRAC solenoid relay and prohibits ABS control and TRAC control.

INSPECTION PROCEDURE

1	**Is DTC output?**

Check DTC on page DI–574.

YES → **Repair circuit indicated by the code output.**

NO

2	**Is normal code displayed?**

YES → **Check solenoid relay. Check for short circuit in harness and connector between solenoid relay and DLC1 (See page IN–31).**

NO

3	**Does ABS warning light go off?**

YES → **Check for open and short circuit in harness and connector between ECU–IG fuse and ABS & TRAC ECU (See page IN–31).**

NO

4	**Check battery positive voltage.**

CHECK:

Check the battery positive voltage.

OK:

10 – 14 V

NG → **Check and repair the charging system**
5S–FE engine: (See page CH–1)
1MZ–FE engine: (See page CH–1).

OK

5	**Check ABS warning light.**

PREPARATION:

(a) Disconnect the connector from the ABS & TRAC ECU.

(b) Turn the ignition switch ON.

CHECK:

Check the ABS warning light goes off.

OK → **Check and replace ABS & TRAC ECU.**

NG

Check for short circuit in harness and connector between ABS warning light, DLC1, DLC2, and ABS & TRAC ECU (See page IN–31)

DI04V–04

ABS Warning Light Circuit

CIRCUIT DESCRIPTION

If the ECU detects a trouble, it lights the ABS warning light while at the same time prohibiting ABS control. At this time, the ECU records a DTC in memory.
Connect terminals Tc and E_1 of the DLC1 or DLC2 to make the ABS warning light blink and output the DTC.

WIRING DIAGRAM

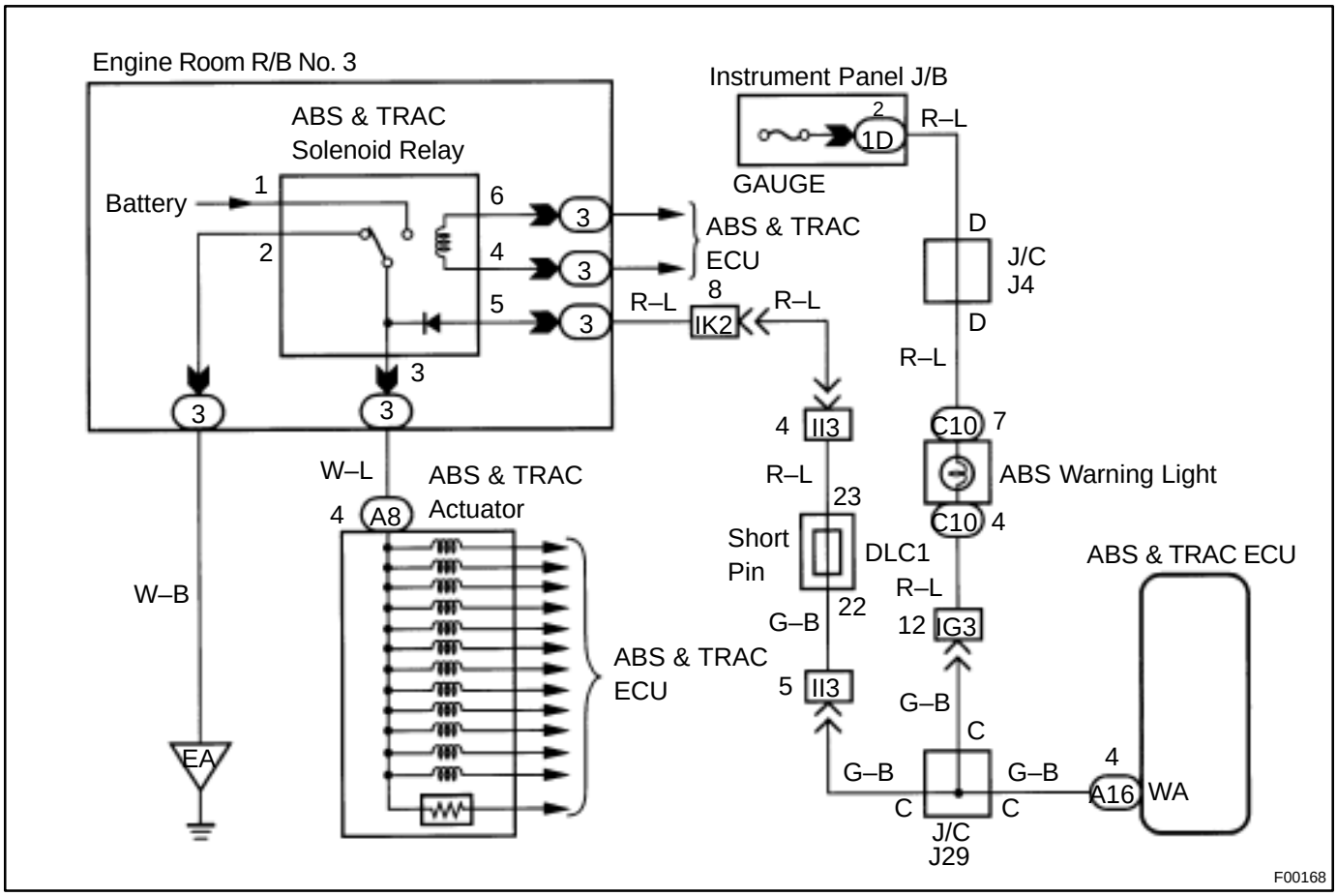

INSPECTION PROCEDURE

Troubleshoot in accordance with the chart below for each trouble symptom.

ABS warning light does not light up	Go to step 1
ABS warning light remains on	Go to step 3

1	**Check ABS warning light.**

See combination meter troubleshooting on page BE–2.

NG → **Repair bulb or combination meter assembly.**

OK

2	Check ABS & TRAC solenoid relay.

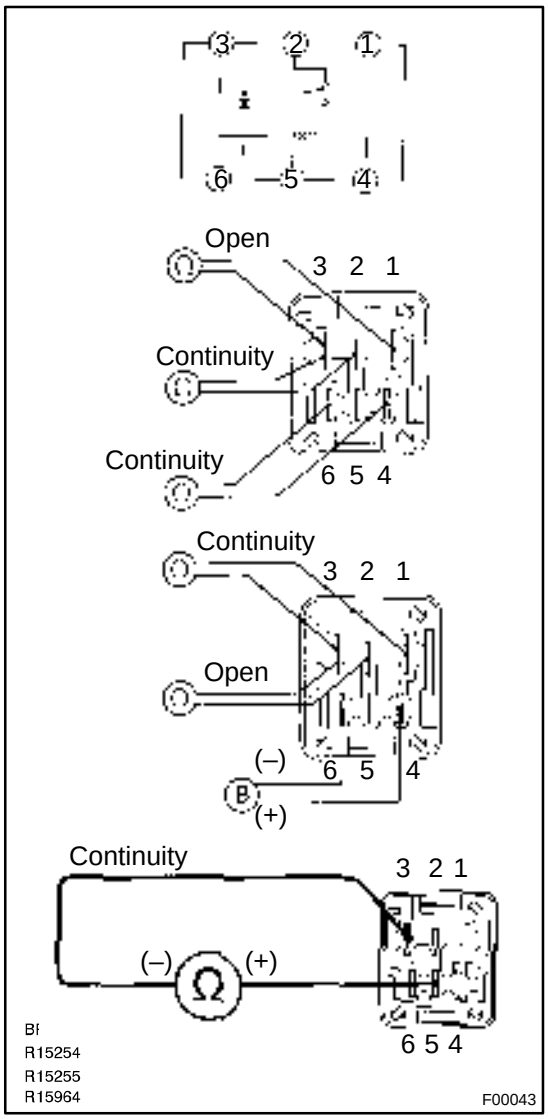

PREPARATION:

Remove ABS & TRAC solenoid relay from Engine Room R/B No. 3.

CHECK:

Check continuity between each terminal of ABS & TRAC solenoid relay.

OK:

Terminals 4 and 6	Continuity (Reference value 80 Ω)
Terminals 2 and 3	Continuity
Terminals 1 and 3	Open

CHECK:

(a) Apply battery positive voltage between terminals 4 and 6.

(b) Check continuity between each terminal of ABS & TRAC solenoid relay.

OK:

Terminals 2 and 3	Open
Terminals 1 and 3	Continuity

CHECK:

Connect the ~ test lead to terminal 5 and the > lead to terminal 3. Check continuity between the terminals.

OK:

Continuity

If there is no continuity, connect the > test lead to terminal 5 and the ~ lead to terminal 3. Recheck continuity between terminals.

NG → **Replace ABS & TRAC solenoid relay.**

OK

Check for open circuit in harness and connector between DLC1, ABS & TRAC solenoid relay and body ground (See page IN–31).

3	**Is DTC output?**

Check DTC on page DI–574.

YES → **Repair circuit indicated by the code output.**

NO

4	**Does ABS warning light go off?**

NO → **Check for short circuit in harness and connector between ABS warning light, DLC1 and ABS & TRAC ECU (See page IN–31).**

YES

5	**Check ABS & TRAC solenoid relay (See step 2).**

NG → **Replace ABS & TRAC solenoid relay.**

OK

Check for short circuit in harness and connector between DLC1 and ABS & TRAC solenoid relay (See page IN–31).

DI04X–04

Ts Terminal Circuit

CIRCUIT DESCRIPTION

The sensor check circuit detects abnormalities in the speed sensor signal which cannot be detected with the DTC check.
Connecting terminals Ts and E_1 of the DLC1 in the engine compartment starts the check.

WIRING DIAGRAM

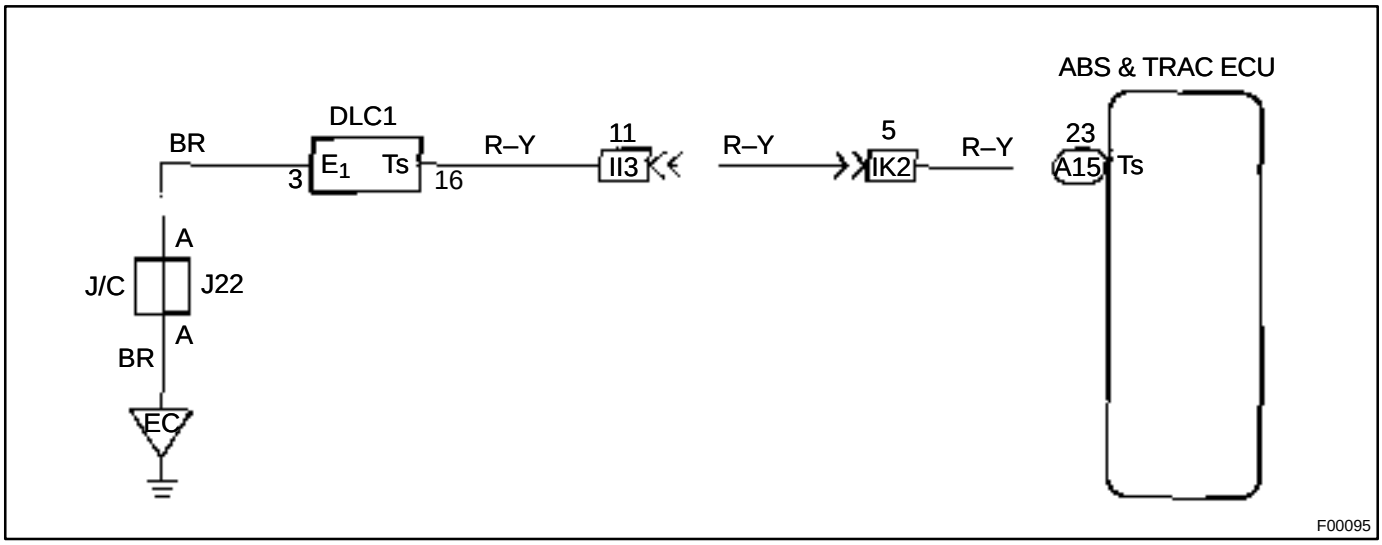

INSPECTION PROCEDURE

1	**Check voltage between terminals Ts and E_1 of DLC1.**

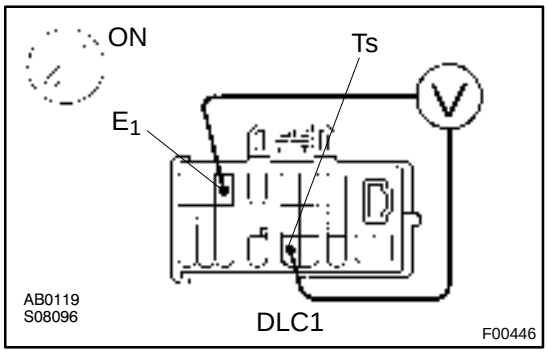

CHECK:

(a) Turn the ignition switch ON.
(b) Measure voltage between terminals Ts and E_1 of DLC1.

OK:

Voltage: 10 – 14 V

OK → **If ABS warning light does not blink even after Ts and E_1 are connected, the ECU may be defective.**

NG

2	**Check for open and short circuit in harness and connector between ABS & TRAC ECU and DLC1, DLC1 and body ground (See page IN–31).**

NG → **Repair or replace harness or connector.**

OK

Check and replace ABS & TRAC ECU.

DI04Y–04

TRAC OFF Indicator, TRAC Cut Switch Circuit

CIRCUIT DESCRIPTION

This is the TRAC control main switch. When the TRAC cut switch is pushed on, TRAC control goes off and the TRAC OFF indicator lights up. This indicator blinks for warnings when the trouble occurs and for displaying DTC.

WIRING DIAGRAM

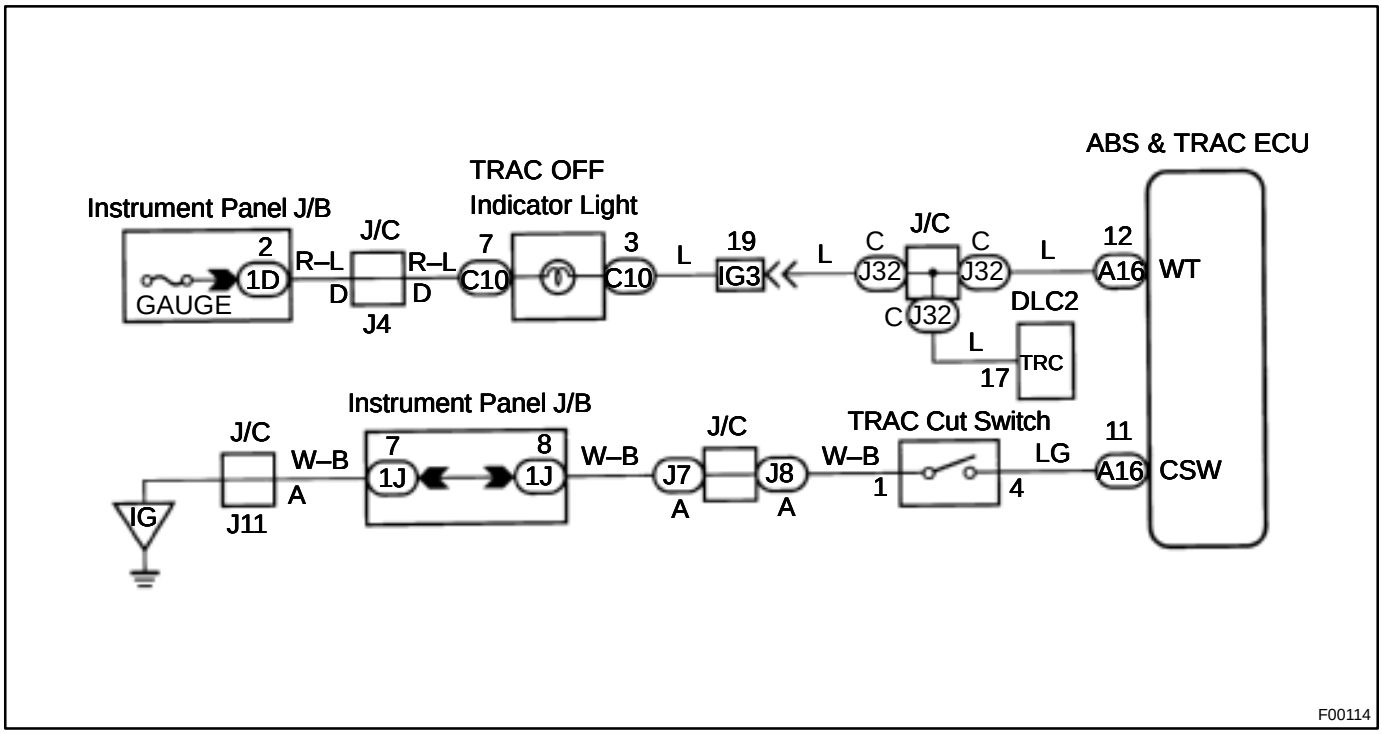

INSPECTION PROCEDURE

1	**Check DTC.**

Check DTC on page DI–574.

YES → **Repair circuit indicated by the code output.**

NO

2	**Check TRAC cut switch.**

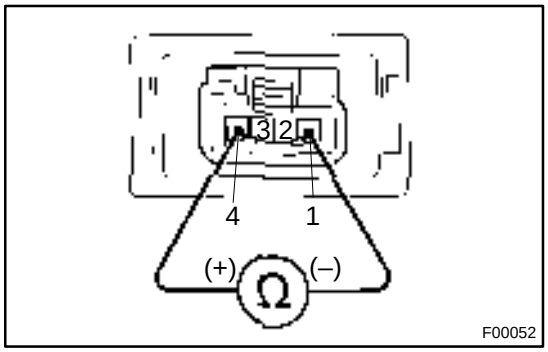

PREPARATION:

(a) Remove TRAC cut switch.

(b) Disconnect TRAC cut switch connector.

CHECK:

Measure resistance between terminals 1 and 4 of TRAC cut switch when TRAC cut switch is ON and OFF.

OK:

TRAC cut switch	Resistance
Pushed in	Continuity
Released	1 MΩ or higher

NG → **Replace TRAC cut switch.**

OK

3	**Check for open and short circuit in harness and connector between terminal CSW of ABS & TRAC ECU and TRAC cut switch and body ground (See page IN–29).**

NG → **Repair or replace harness or connector.**

OK

4	**Check TRAC OFF indicator light.**

See combination meter troubleshooting on page BE–2.

NG → **Repair or replace combination meter.**

OK

5	**Check for open and short circuit in harness and connector between terminal WT of ABS & TRAC ECU and TRAC OFF indicator light (See page IN–31).**

NG → **Repair or replace harness or connector.**

OK

Check and replace ABS & TRAC ECU.

DI04Z–04

SLIP Indicator Light Circuit

CIRCUIT DESCRIPTION

The SLIP indicator blinks during TRAC operation.

WIRING DIAGRAM

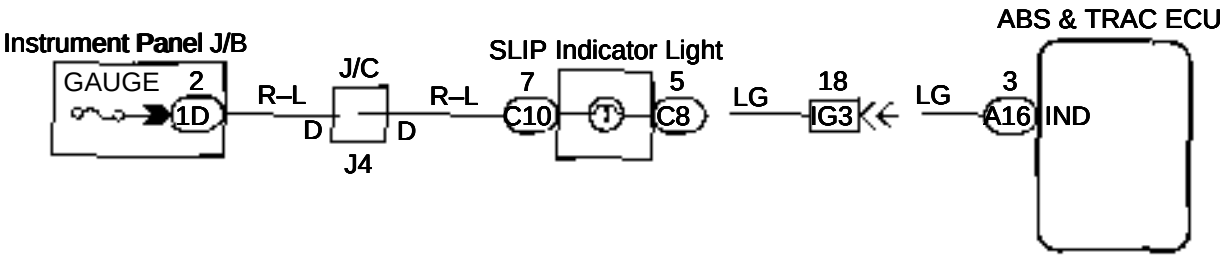

INSPECTION PROCEDURE

1	**Check SLIP indicator light.**

See combination meter troubleshooting on page BE–2.

NG → **Repair or replace combination meter.**

OK

2	**Check for short circuit in harness and connector between ABS & TRAC ECU and SLIP indicator light (See page IN–31).**

NG → **Repair or replace harness or connector.**

OK

Check and replace ABS & TRAC ECU.

DI4KY–01

Tc Terminal Circuit

CIRCUIT DESCRIPTION

Connecting between terminals Tc and E_1 of the DLC1 or the DLC2 causes the ECU to display the DTC by blinking the ABS warning light and TRAC OFF indicator light.

WIRING DIAGRAM

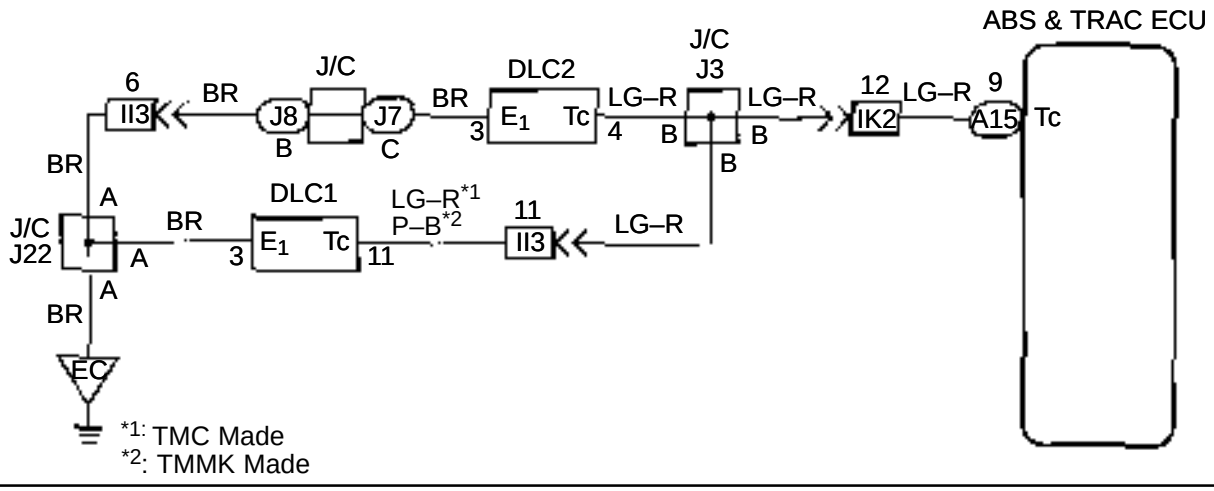

INSPECTION PROCEDURE

1	**Check voltage between terminals Tc and E_1 of DLC2 or DLC1.**

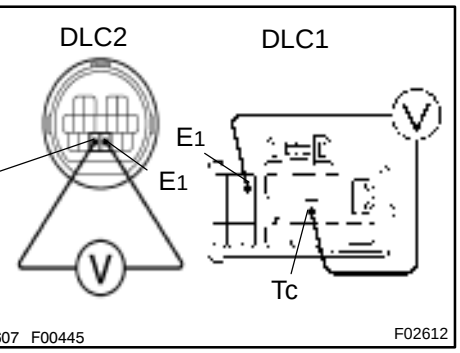

CHECK:

(a) Turn the ignition switch ON.

(b) Measure voltage between terminals Tc and E_1 of DLC2 or DLC1.

OK:

Voltage: 10 – 14 V

OK	**If ABS warning light does not blink even after Tc and E_1 are connected, the ECU may be defective.**

NG

2	**Check for open and short circuit in harness and connector between ABS & TRAC ECU and DLC2 or DLC1, DLC2 or DLC1 and body ground (See page IN–31).**

NG → **Repair or replace harness or connector.**

OK

Check and replace ABS & TRAC ECU.

DI050–03

Check for Fluid Leakage

Check for fluid leakage from actuator or hydraulic lines.

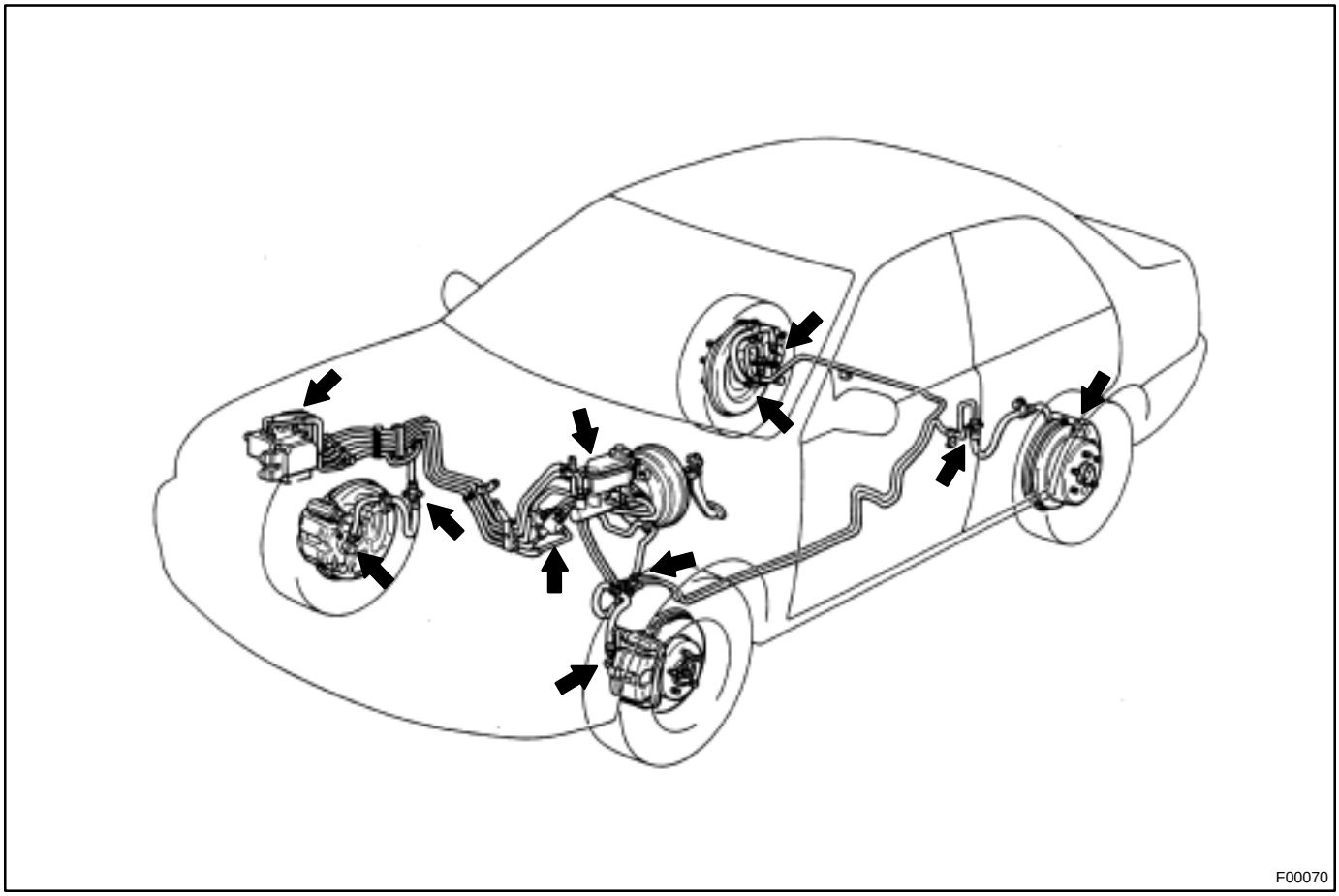

F00070

SUPPLEMENTAL RESTRAINT SYSTEM

DI1AX–04

HOW TO PROCEED WITH TROUBLESHOOTING

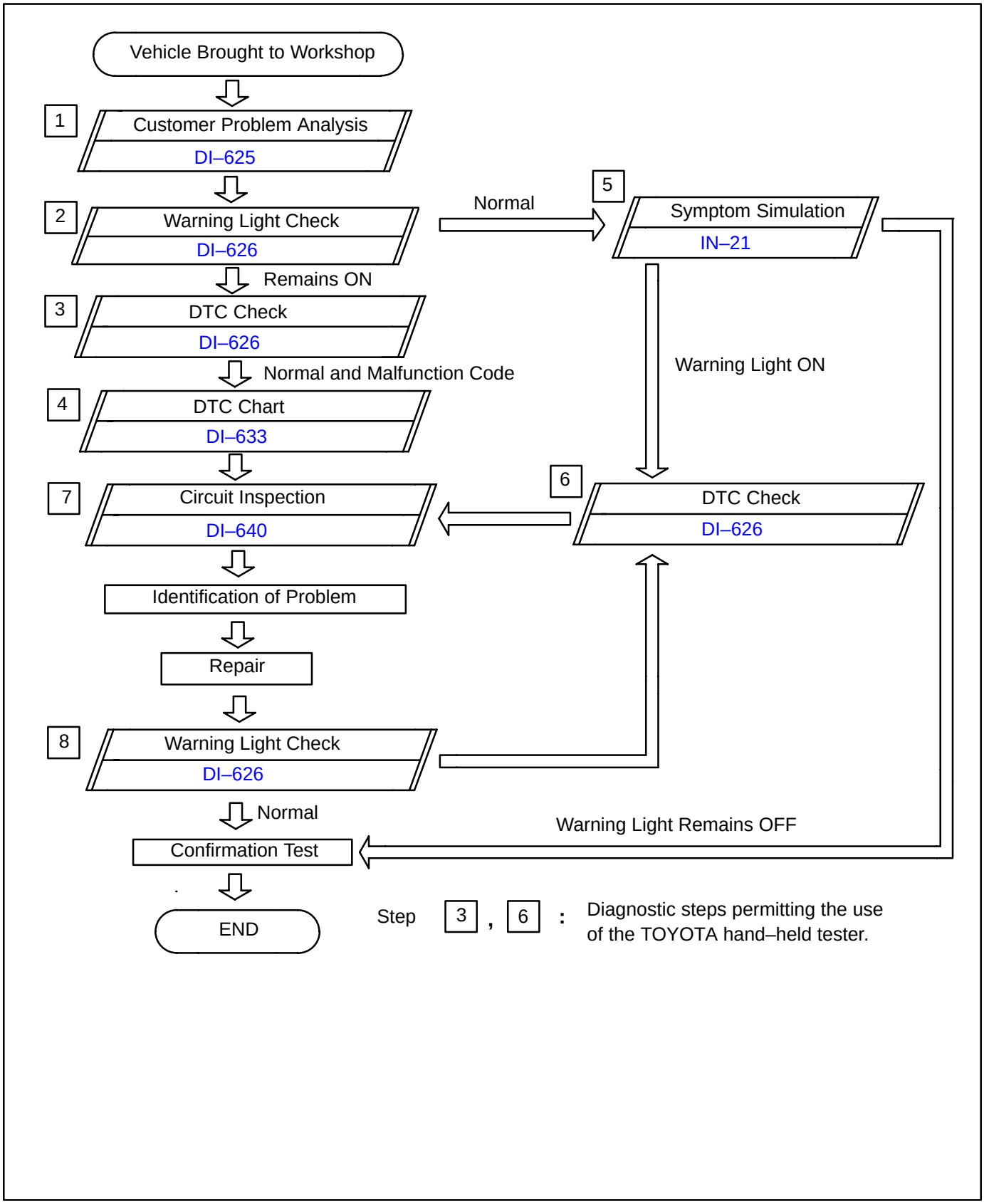

DI15Z–07

CUSTOMER PROBLEM ANALYSIS CHECK

Supplemental Restraint System Check Sheet

Inspector's Name _____

Customer's Name		**Registration No.**	
		Registration Year	/ /
		Frame No.	
Date Vehicle Brought In	/ /	**Odometer Reading**	**km Miles**

Date Problem Occurred	/ /
Weather	☐ Fine ☐ Cloudy ☐ Rainy ☐ Snowy ☐ Other
Temperature	**Approx.**

Vehicle Operation	☐ Starting ☐ Idling ☐ Driving [☐ Constant speed ☐ Acceleration ☐ Deceleration ☐ Other]
Road Conditions	
Details Of Problem	

Vehicle Inspection, Repair History Prior to Occurrence of Malfunction (Including Supplemental Restraint System)	

Diagnosis System Inspection

SRS Warning Light Inspection	**1st Time**	☐ Remains ON ☐ Sometimes Light Up ☐ Does Not Light Up
	2nd Time	☐ Remains ON ☐ Sometimes Light Up ☐ Does Not Light Up
DTC Inspection	**1st Time**	☐ Normal Code ☐ Malfunction Code [Code.]
	2nd Time	☐ Normal Code ☐ Malfunction Code [Code.]

DI4L1–01

PRE–CHECK

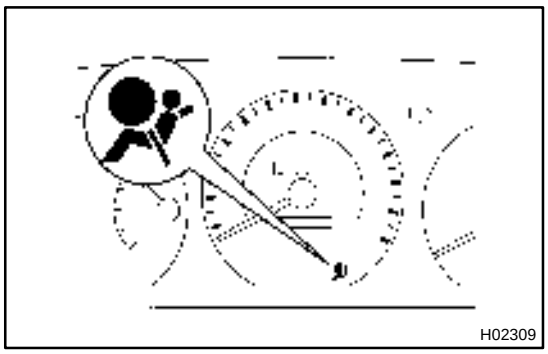
H02309

1. SRS WARNING LIGHT CHECK

(a) Turn the ignition switch to the ACC or ON position and check that the SRS warning light lights up.

(b) Check that the SRS warning light goes out after approx. 6 seconds.

HINT:

- When the ignition switch is at ACC or ON and the SRS warning light remains on or flashes, the airbag sensor assembly has detected a malfunction code.
- If, after approx. 6 seconds have elapsed, the SRS warning light sometimes lights up or the SRS warning light lights up even when the ignition switch is OFF, a short in the SRS warning light circuit can be considered likely. Proceed to "SRS warning light circuit malfunction" on page DI–790, DI–792.

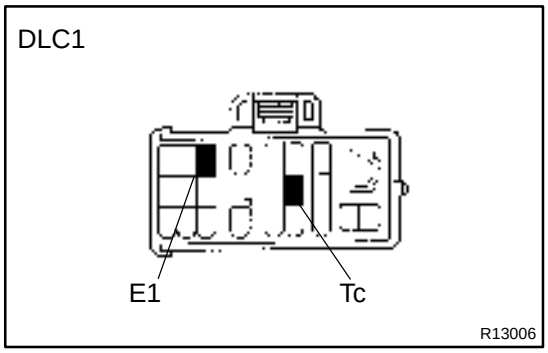

2. DTC CHECK (Using diagnosis check wire)

(a) Present troubles codes:

Output the DTC.

(1) Turn the ignition switch to the ACC or ON position and wait for approx. 20 seconds.

(2) Using SST, connect terminals Tc and E1 of the DLC1.

SST 09843–18020

NOTICE:

Pay due attention to the terminal connecting position to avoid a malfunction.

(b) Past troubles codes:

Output the DTC.

(1) Using service wire, connect Terminals Tc and E1 of the DLC1.

SST 09843–18020

(2) Turn the ignition switch to the ACC or ON position and wait for approx. 20 seconds.

NOTICE:

Pay due attention to the terminal connecting position to avoid a malfunction.

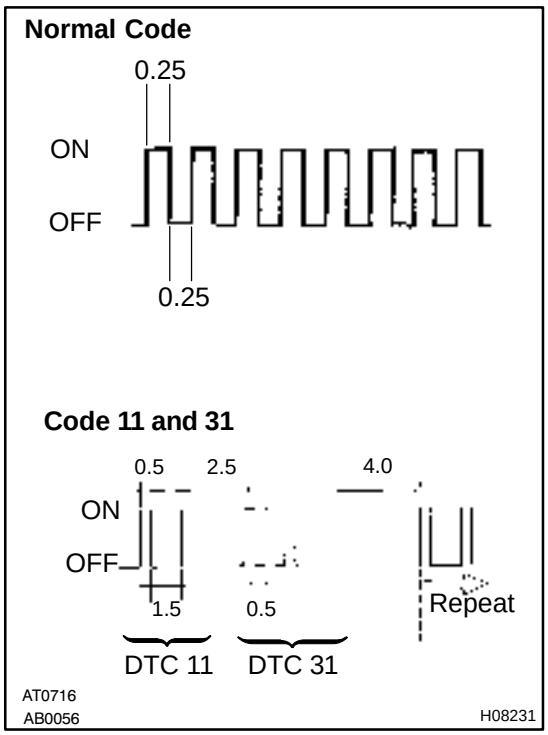

(c) Read the DTC.
Read the 2–digit DTC as indicated by the number of times the SRS warning light blinks. As an example, the blinking patterns, normal, 11 and 31 are shown in the illustration.

- Normal code indication
  The light will blink 2 times per second.
- Malfunction code indication
  The first blinking output indicates the first digit of a 2–digit DTC. After a 1.5–second pause, the second blinking output will indicate the second digit.

If there are 2 or more codes, there will be a 2.5–second pause between each code. After all the codes have been output, there will be a 4.0–second pause and they will all be repeated.
HINT:

- In the event of a number of trouble codes, indication will start from the smallest numbered code.
- If a DTC is not output or a DTC is output without terminal connection, proceed to the Tc terminal circuit inspection on page DI–796.

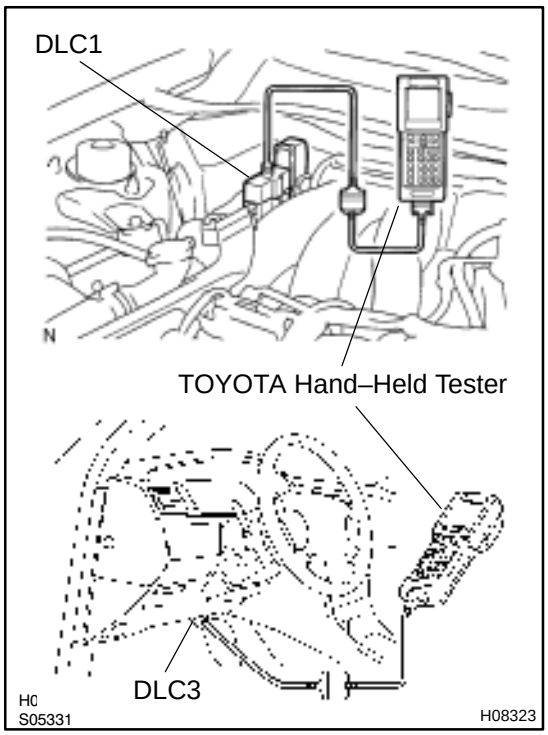

3. DTC CHECK (Using TOYOTA hand–held tester)

(a) Hook up the TOYOTA hand–held tester to the DLC1 or the DLC3.
(b) Read the DTCs by following the prompts on the tester screen.

HINT:
Please refer to the TOYOTA hand–held tester operator's manual for further details.

4. DTC CLEARANCE (Not using service wire)

When the ignition switch is turned off, the diagnostic trouble code is cleared.
HINT:
DTC might not be cleared by turning the ignition switch OFF. In this case, proceed to the next step.

5. DTC CLEARANCE (Using service wire)

(a) Connect the 2 service wires to terminals Tc and AB of DLC1.
(b) Turn the ignition switch to ACC or ON and wait for approx. 6 seconds.

(c) Starting with the Tc terminal, ground alternately terminal Tc and terminal AB twice each in cycles of 1.0 seconds. Make sure that the terminals are grounded. Ensure the terminal Tc remain grounded.

HINT:

When alternately grounding terminals Tc and AB, release ground from one terminal and immediately ground the other terminal within an interval of 0.2 seconds.

If DTCs are not cleared, repeat the above procedure until the codes are cleared.

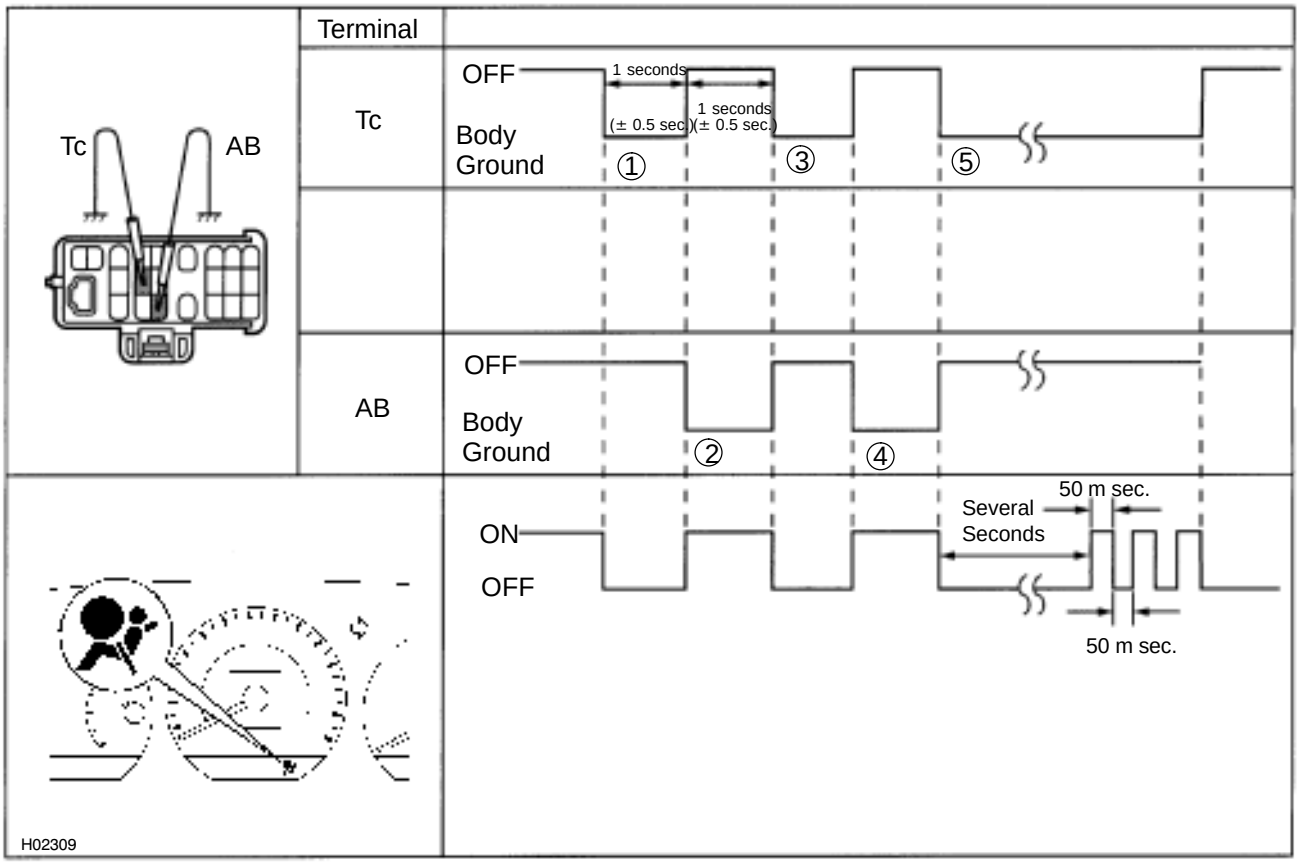

H01461

H02271

(d) Several seconds after doing the clearing procedure, the SRS warning light will blink in a 50 m sec. cycle to indicate the codes which have been cleared.

6. Past troubles codes:
DTC CLEARANCE
(See step 5.)

7. RELEASE METHOD OF AIRBAG ACTIVATION PREVENTION MECHANISM

An airbag activation prevention mechanism is built into the connector for the squib circuit of the SRS.

When release of the airbag activation prevention mechanism is directed in the troubleshooting procedure, as shown in the illustration of the connectors on the next pages, insert paper which is the same thickness as the male terminal, between the terminal and the short spring.

CAUTION:

Never release the airbag activation prevention mechanism on the steering wheel pad connector.

NOTICE:

- **Do not release the airbag activation prevention mechanism unless specifically directed by the troubleshooting procedure.**
- **If the inserted paper is too thick the terminal and short spring may be damaged, so always use paper with the same thickness as the male terminal.**

TMC made :

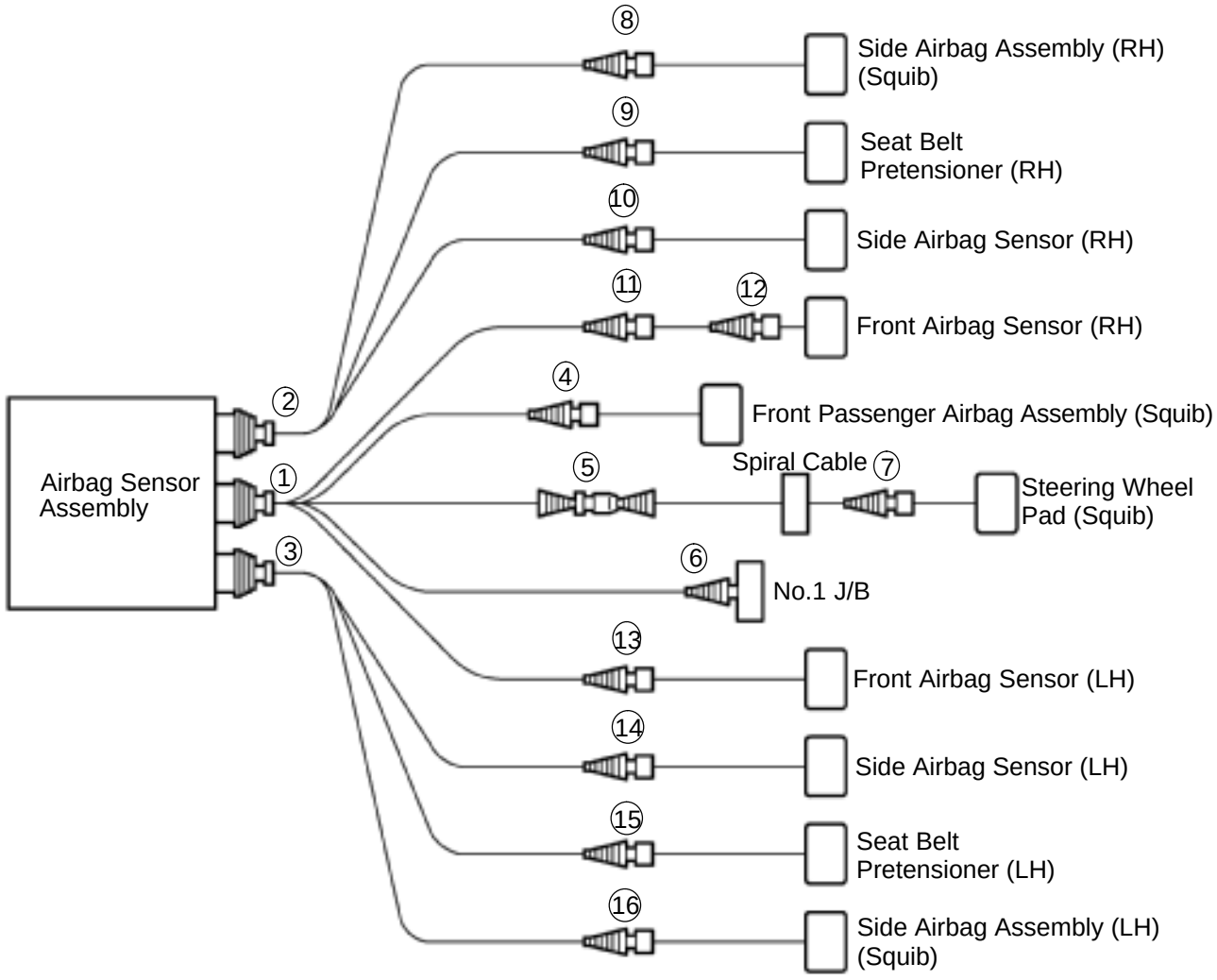

N

H08316

TMMK made :

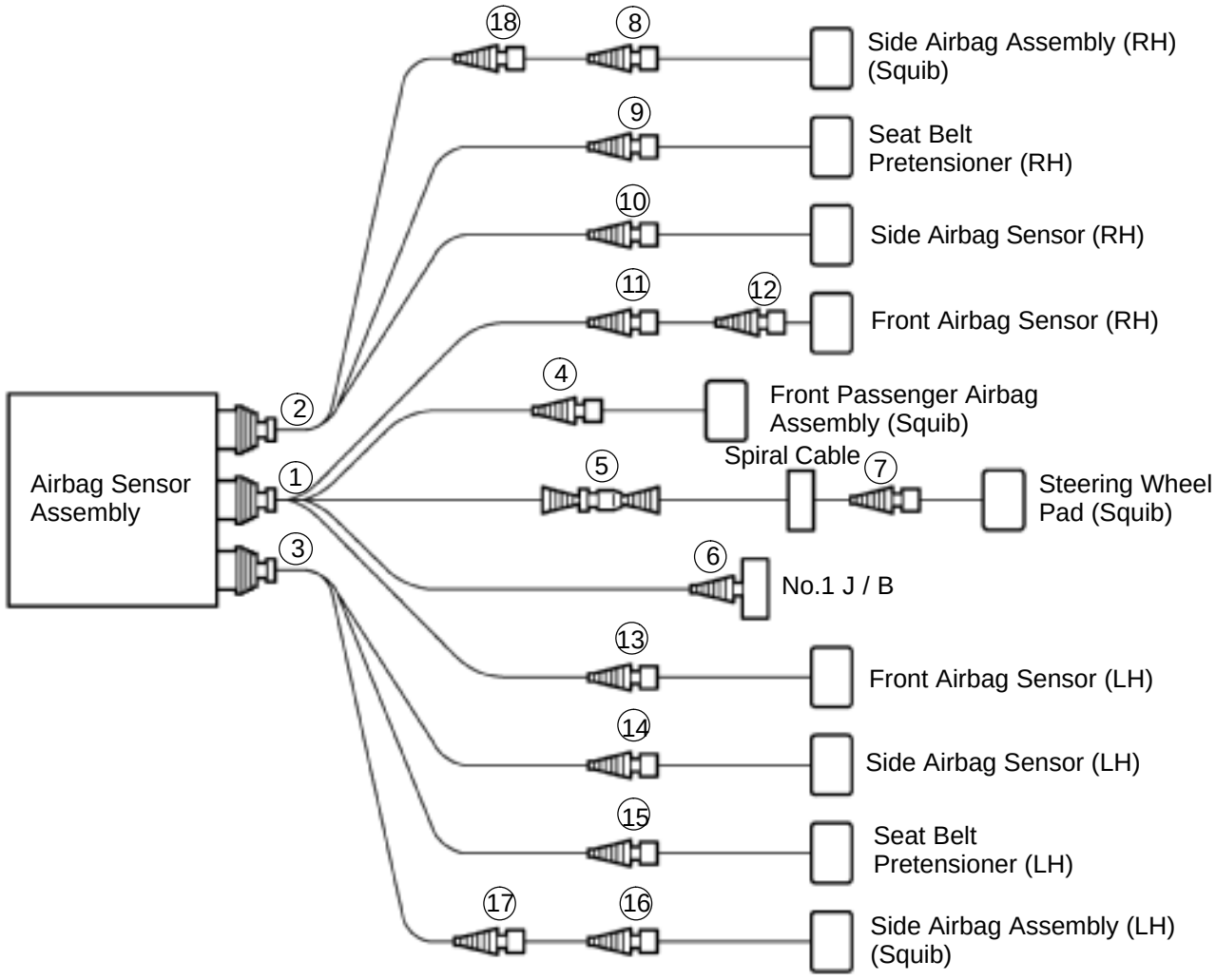

H08247

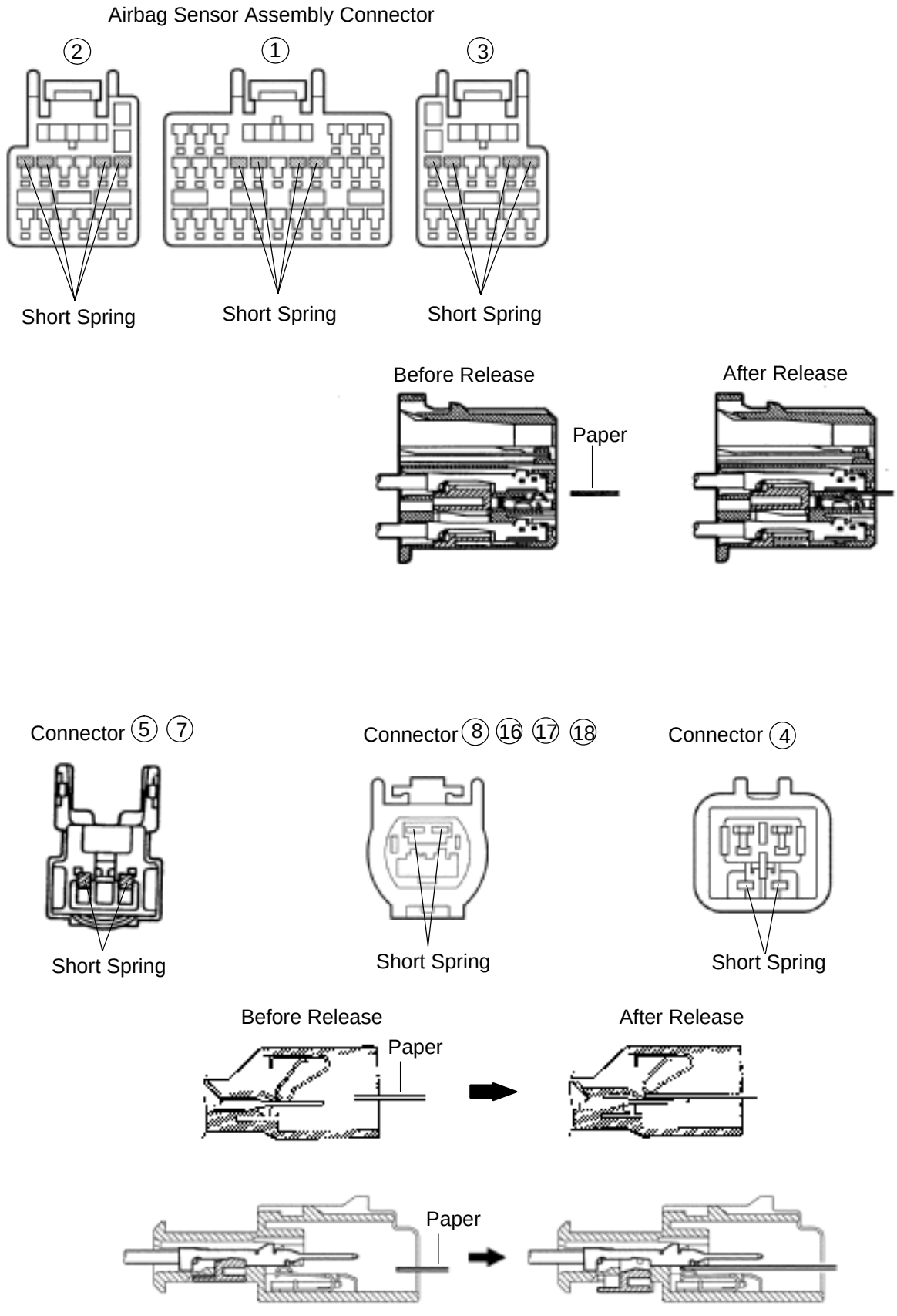
Airbag Sensor Assembly Connector
2
1
3
Short Spring
Short Spring
Short Spring
Before Release
Paper
After Release
Connector 5 7
Connector 8 16 17 18
Connector 4
Short Spring
Short Spring
Short Spring
Before Release
Paper
After Release
Paper
H01356
H01233
AB0130
H00992
AB0045
AB0046
H02249
H02248
H01358

DI1AZ–04

DIAGNOSTIC TROUBLE CODE CHART

If a malfunction code is displayed during the DTC check, check the circuit listed for that code in the table below (Proceed to the page given for that circuit.).

DTC No. (See Page)	Detection Item	Trouble Area	SRS Warning Light
B0100/13 (DI–640)	●Short in D squib circuit	●Steering wheel pad (squib) ●Spiral cable ●Airbag sensor assembly ●Wire harness	ON
B0101/14 (DI–645)	●Open in D squib circuit	●Steering wheel pad (squib) ●Spiral cable ●Airbag sensor assembly ●Wire harness	ON
B0102/11 (DI–649)	●Short in D squib circuit (to Ground)	●Steering wheel pad (squib) ●Spiral cable ●Airbag sensor assembly ●Wire harness	ON
B0103/12 (DI–653)	●Short in D squib circuit (to B+)	●Steering wheel pad (squib) ●Spiral cable ●Airbag sensor assembly ●Wire harness	ON
B0105/53 (DI–657)	●Short in P squib circuit	●Front passenger airbag assembly (squib) ●Airbag sensor assembly ●Wire harness	ON
B0106/54 (DI–661)	●Open in P squib circuit	●Front passenger airbag assembly (squib) ●Airbag sensor assembly ●Wire harness	ON
B0107/51 (DI–664)	●Short in P squib circuit (to Ground)	●Front passenger airbag assembly (squib) ●Airbag sensor assembly ●Wire harness	ON
B0108/52 (DI–667)	●Short in P squib circuit (to B+)	●Front passenger airbag assembly (squib) ●Airbag sensor assembly ●Wire harness	ON
TMC made: B0110/43 (DI–670)	●Short in side squib (RH) circuit	●Side airbag assembly RH (squib) ●Airbag sensor assembly ●Wire harness	Blink
TMMK made: B0110/43 (DI–674)	●Short in side squib (RH) circuit	●Side airbag assembly RH (squib) ●Airbag sensor assembly ●Wire harness ●Sub wire harness	Blink
TMC made: B0111/44 (DI–679)	●Open in side squib (RH) circuit	●Side airbag assembly RH (squib) ●Airbag sensor assembly ●Wire harness	Blink
TMMK made: B0111/44 (DI–682)	●Open in side squib (RH) circuit	●Side airbag assembly RH (squib) ●Airbag sensor assembly ●Wire harness ●Sub wire harness	Blink
TMC made: B0112/41 (DI–686)	●Short in side squib (RH) circuit (to Ground)	●Side airbag assembly RH (squib) ●Airbag sensor assembly ●Wire harness	Blink

DTC No. (See Page)	Detection Item	Trouble Area	SRS Warning Light
TMMK made: B0112/41 (DI–689)	●Short in side squib (RH) circuit (to Ground)	●Side airbag assembly RH (squib) ●Airbag sensor assembly ●Wire harness ●Sub wire harness	Blink
TMC made: B0113/42 (DI–693)	●Short in side squib (RH) circuit (to B+)	●Side airbag assembly RH (squib) ●Airbag sensor assembly ●Wire harness	Blink
TMMK made: B0113/42 (DI–696)	●Short in side squib (RH) circuit (to B+)	●Side airbag assembly RH (squib) ●Airbag sensor assembly ●Wire harness ●Sub wire harness	Blink
TMC made: B0115/47 (DI–700)	●Short in side squib (LH) circuit	●Side airbag assembly LH (squib) ●Airbag sensor assembly ●Wire harness	Blink
TMMK made: B0115/47 (DI–704)	●Short in side squib (LH) circuit	●Side airbag assembly LH (squib) ●Airbag sensor assembly ●Wire harness ●Sub wire harness	Blink
TMC made: B0116/48 (DI–709)	●Open in side squib (LH) circuit	●Side airbag assembly LH (squib) ●Airbag sensor assembly ●Wire harness	Blink
TMMK made: B0116/48 (DI–712)	●Open in side squib (LH) circuit	●Side airbag assembly LH (squib) ●Airbag sensor assembly ●Wire harness ●Sub wire harness	Blink
TMC made: B0117/45 (DI–716)	●Short in side squib (LH) circuit (to Ground)	●Side airbag assembly LH (squib) ●Airbag sensor assembly ●Wire harness	Blink
TMMK made: B0117/45 (DI–719)	●Short in side squib (LH) circuit (to Ground)	●Side airbag assembly LH (squib) ●Airbag sensor assembly ●Wire harness ●Sub wire harness	Blink
TMC made: B0118/46 (DI–723)	●Short in side squib (LH) circuit (to B+)	●Side airbag assembly LH (squib) ●Airbag sensor assembly ●Wire harness	Blink
TMMK made: B0118/46 (DI–726)	●Short in side squib (LH) circuit (to B+)	●Side airbag assembly LH (squib) ●Airbag sensor assembly ●Wire harness ●Sub wire harness	Blink
B0130/63 (DI–730)	●Short in P/T squib (RH) circuit	●Seat belt pretensioner RH (squib) ●Airbag sensor assembly ●Wire harness	Blink
B0131/64 (DI–734)	●Open in P/T squib (RH) circuit	●Seat belt pretensioner RH (squib) ●Airbag sensor assembly ●Wire harness	Blink
B0132/61 (DI–737)	●Short in P/T squib (RH) circuit (to Ground)	●Seat belt pretensioner RH (squib) ●Airbag sensor assembly ●Wire harness	Blink
B0133/62 (DI–740)	●Short in P/T squib (RH) circuit (to B+)	●Seat belt pretensioner RH (squib) ●Airbag sensor assembly ●Wire harness	Blink

DTC No. (See Page)	Detection Item	Trouble Area	SRS Warning Light
B0135/73 (DI–743)	●Short in P/T squib (LH) circuit	●Seat belt pretensioner LH (squib) ●Airbag sensor assembly ●Wire harness	Blink
B0136/74 (DI–747)	●Open in P/T squib (LH) circuit	●Seat belt pretensioner LH (squib) ●Airbag sensor assembly ●Wire harness	Blink
B0137/71 (DI–750)	●Short in P/T squib (LH) circuit (to Ground)	●Seat belt pretensioner LH (squib) ●Airbag sensor assembly ●Wire harness	Blink
B0138/72 (DI–753)	●Short in P/T squib (LH) circuit (to B+)	●Seat belt pretensioner LH (squib) ●Airbag sensor assembly ●Wire harness	Blink
B1100/31 (DI–756)	●Airbag sensor assembly malfunction	●Airbag sensor assembly	ON
B1140/32 (DI–758)	●Side airbag sensor assembly (RH) malfunction	●Side airbag sensor assembly (RH) ●Wire harness	Blink
B1141/33 (DI–766)	●Side airbag sensor assembly (LH) malfunction	●Side airbag sensor assembly (LH) ●Wire harness	Blink
B1156/B1157/15 (DI–774)	●Front airbag sensor (RH) malfunction	●Front airbag sensor (RH) ●Wire harness ●Engine room main wire harness	ON
B1158/B1159/16 (DI–782)	●Front airbag sensor (LH) malfunction	●Front airbag sensor (LH) ●Wire harness	ON
Normal (DI–787)	●System normal	–	OFF
	●Voltage source drop	●Battery ●Airbag sensor assembly	ON

HINT:

- When the SRS warning light remains lit up and the DTC is the normal code, this means a voltage source drops.
  This malfunction is not stored in memory by the airbag sensor assembly and if the power source voltage returns to normal, the SRS warning light will automatically go out.
- When 2 or more codes are indicated, the codes will be displayed in numeral order starting from the lowest numbered code.
- If a code not listed on the chart is displayed, the airbag sensor assembly is faulty.

DI1B0–04

PARTS LOCATION

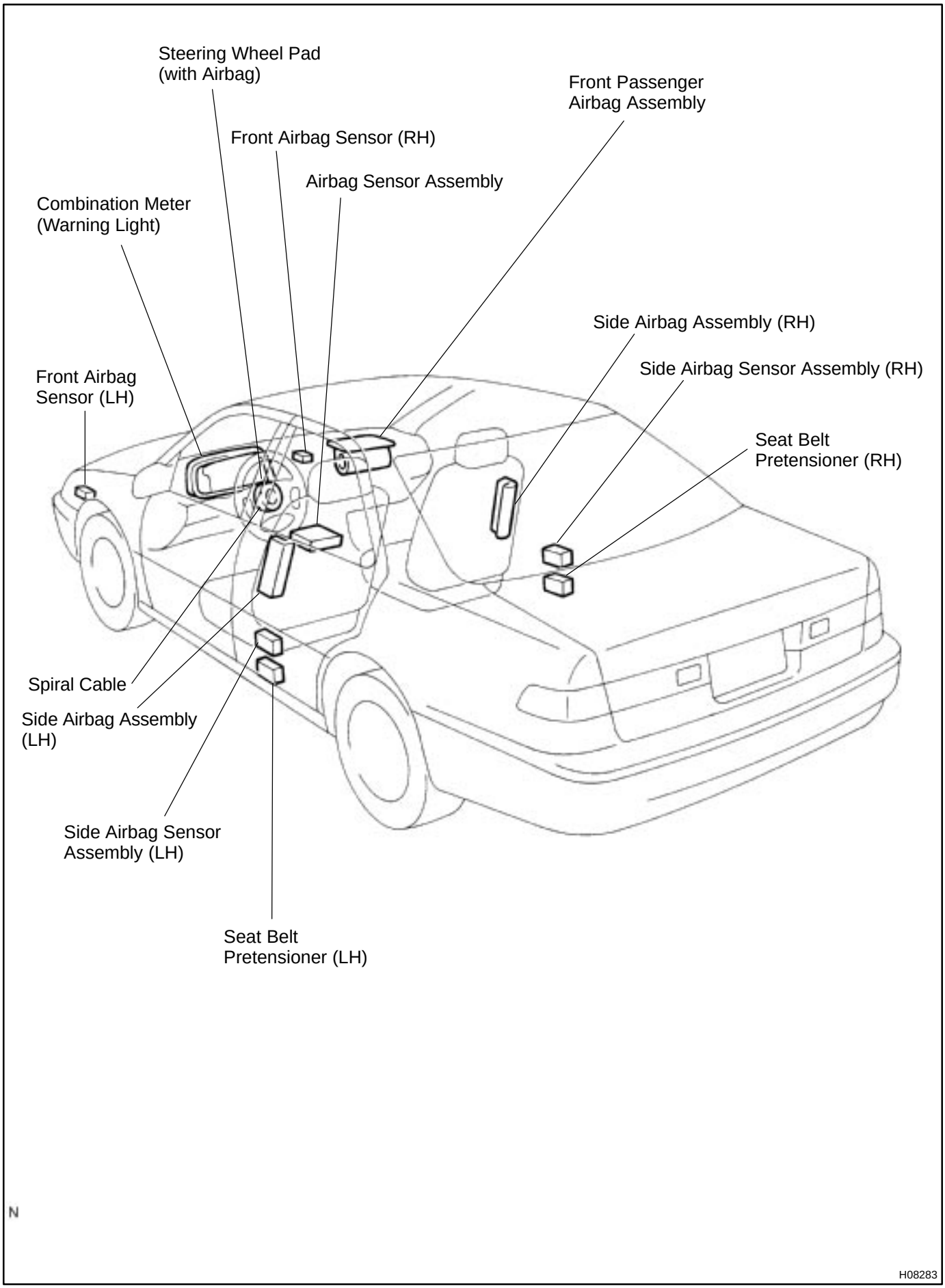

DI1B1–08

TERMINALS OF ECU

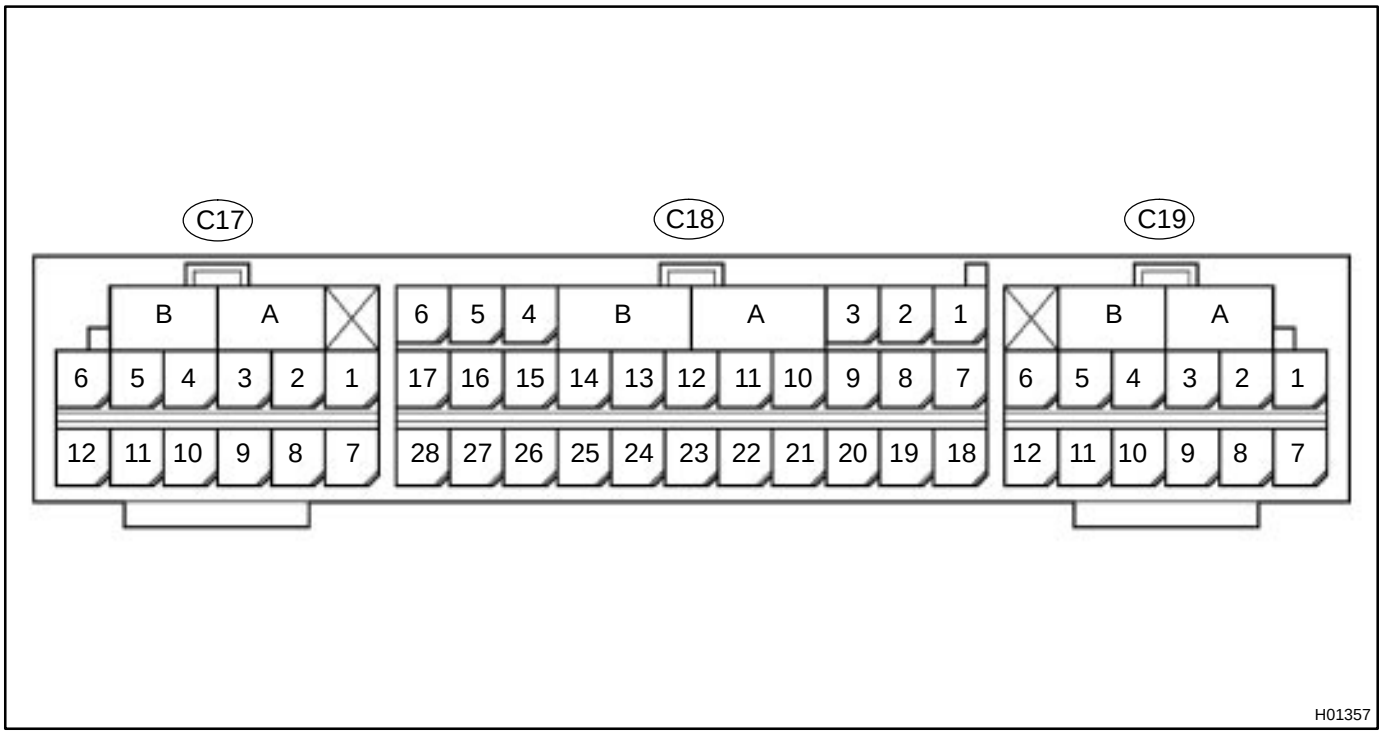

No.	Symbol	Terminal Name
A	–	Electrical Connector Check Mechanism
B	–	Electrical Connector Check Mechanism
C18 – 3	LA	SRS Warning Light
C18 – 5	IG2	Power Source (IGN Fuse)
C18 – 6	ACC	Power Source (CIG Fuse)
C18 – 9	SR+	Front Airbag Sensor (RH)
C18 – 10	P+	Squib (Passenger)
C18 – 11	P–	Squib (Passenger)
C18 – 12	SIL	Diagnosis
C18 – 13	D–	Squib (Driver)
C18 – 14	D+	Squib (Driver)
C18 – 15	SL+	Front Airbag Sensor (LH)
C18 – 19	Tc	Diagnosis
C18 – 20	SR–	Front Airbag Sensor (RH)
C18 – 26	SL–	Front Airbag Sensor (LH)
C18 – 27	E1	Ground
C18 – 28	E2	Ground
C17 – 1	PL–	Squib (Seat Belt Pretensioner, LH)
C17 – 2	PL+	Squib (Seat Belt Pretensioner, LH)
C17 – 5	SFL+	Squib (Side, LH)
C17 – 6	SFL–	Squib (Side, LH)
C17 – 7	VUPL	Side Airbag Sensor (LH)
C17 – 9	SSL+	Side Airbag Sensor (LH)
C17 – 10	FSL	Side Airbag Sensor (LH)
C17 – 12	ESL	Side Airbag Sensor (LH)

No.	Symbol	Terminal Name
C19 – 1	SFR–	Squib (Side, RH)
C19 – 2	SFR+	Squib (Side, RH)
C19 – 5	PR+	Squib (Pretensioner, RH)
C19 – 6	PR–	Squib (Pretensioner, RH)
C19 – 7	ESR	Side Airbag Sensor (RH)
C19 – 9	FSR	Side Airbag Sensor (RH)
C19 – 10	SSR+	Side Airbag Sensor (RH)
C19 – 12	VUPR	Side Airbag Sensor (RH)

DI164–18

PROBLEM SYMPTOMS TABLE

Proceed with troubleshooting of each circuit in the table below.

Symptom	Suspect Area	See page
●With the ignition switch in ACC or ON position, the SRS warning light sometimes lights up after approx. 6 seconds have elapsed.	●SRS warning light circuit (Always lights up when ignition switch is in LOCK position.)	DI–790
●SRS warning light is always lit up even when ignition switch is in the LOCK position.		
●With the ignition switch in ACC or ON position, the SRS warning light does not light up.	●SRS warning light circuit (Does not light up when ignition switch is turned to ACC or ON.)	DI–792
●DTC is not displayed.	●Tc terminal circuit	DI–796
●SRS warning light is always lit up at the time of DTC check procedure.		
●DTC is displayed without Tc and E1 terminal connection.		

DI18Q–09

CIRCUIT INSPECTION

DTC	B0100/13	Short in D Squib Circuit

CIRCUIT DESCRIPTION

The D squib circuit consists of the airbag sensor assembly, spiral cable and steering wheel pad.
It causes the airbag to deploy when the airbag deployment conditions are satisfied.
For details of the function of each component, see OPERATION on page RS–2.
DTC B0100/13 is recorded when a short is detected in the D squib circuit.

DTC No.	DTC Detecting Condition	Trouble Area
B0100/13	●Short circuit between D+ wire harness and D– wire harness of squib ●D squib malfunction ●Spiral cable malfunction ●Airbag sensor assembly malfunction	●Steering wheel pad (D squib) ●Spiral cable ●Airbag sensor assembly ●Wire harness

WIRING DIAGRAM

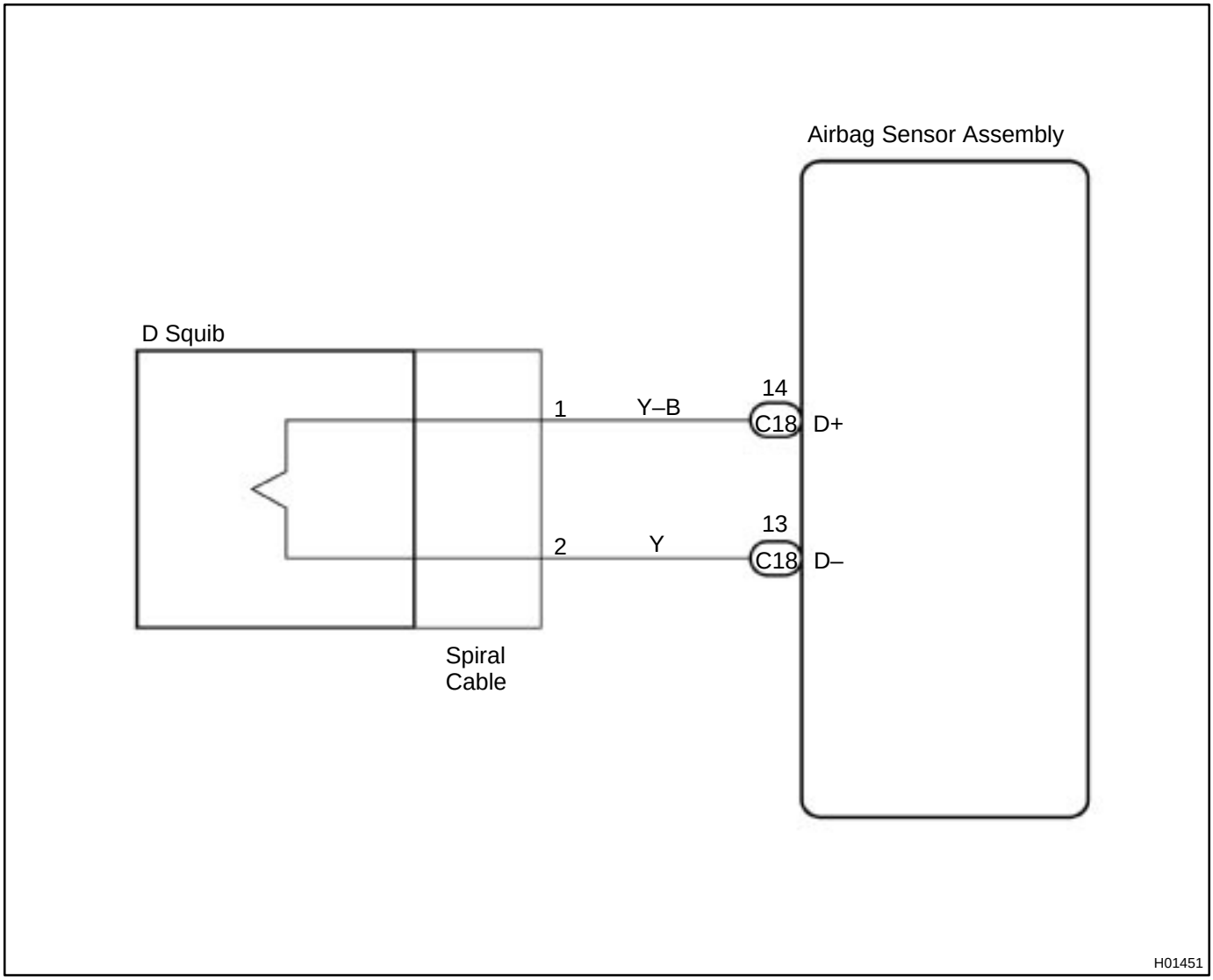

INSPECTION PROCEDURE

1	**Prepare for inspection. (See step 1 on page DI–787)**

2	**Check D squib circuit.**

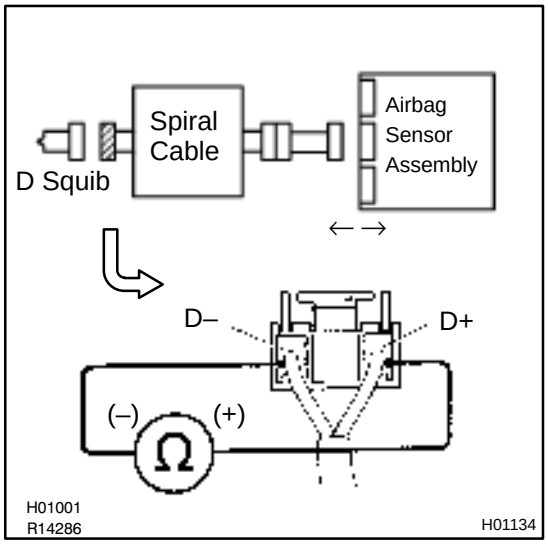

PREPARATION:

Release the airbag activation prevention mechanism of the connector (on the airbag sensor assembly side) between the airbag sensor assembly and the spiral cable.
(See page DI–626)

CHECK:

For the connector (on the spiral cable side) between the spiral cable and the steering wheel pad, measure the resistance between D+ and D–.

OK:

Resistance: 1 MΩ or Higher

NG → **Go to step 5.**

OK

3	Check airbag sensor assembly.

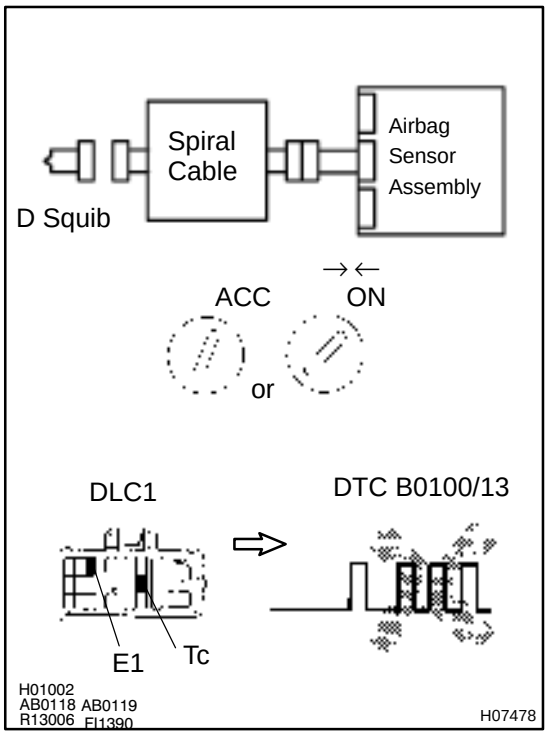

PREPARATION:

(a) Connect the connector to the airbag sensor assembly.
(b) Connect negative (–) terminal cable to the battery, and wait at least for 2 seconds.

CHECK:

(a) Turn ignition switch to ACC or ON and wait at least for 20 seconds.
(b) Clear DTC stored in memory.
(See page DI–626)
(c) Turn ignition switch to LOCK, and wait at least for 20 seconds.
(d) Turn ignition switch to ACC or ON, and wait at least for 20 seconds.
(e) Check DTC.
(See page DI–626)

OK:

DTC B0100/13 is not output.

HINT:
Codes other than code B0100/13 may be output at this time, but they are not relevant to this check.

NG → **Replace airbag sensor assembly.**

OK

4	Check D squib.

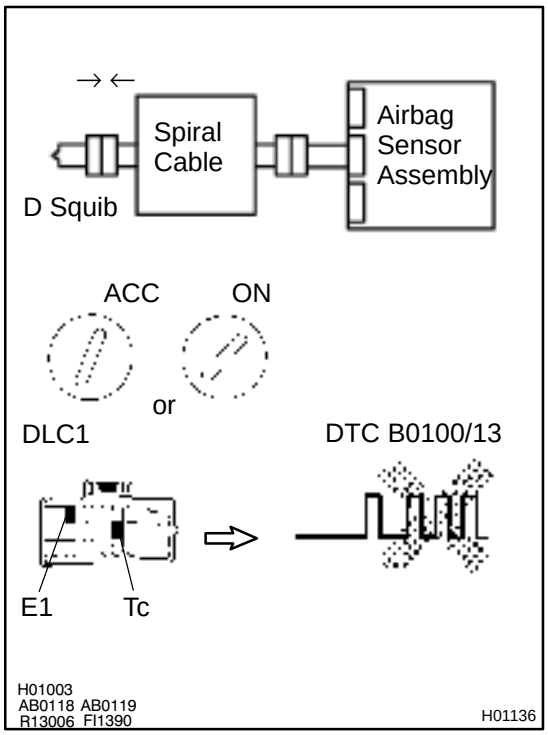

PREPARATION:

(a) Turn ignition switch to LOCK.
(b) Disconnect negative (–) terminal cable from the battery, and wait at least for 90 seconds.
(c) Connect the steering wheel pad connector.
(d) Connect negative (–) terminal cable to the battery, and wait at least for 2 seconds.

CHECK:

(a) Turn ignition switch to LOCK, and wait at least for 20 seconds.
(b) Turn ignition switch to ACC or ON, and wait at least for 20 seconds.
(c) Clear DTC stored in memory.
(See page DI–626)
(d) Turn ignition switch to LOCK, and wait at least for 20 seconds.
(e) Turn ignition switch to ACC or ON, and wait at least for 20 seconds.
(f) Check DTC.
(See page DI–626)

OK:

DTC B0100/13 is not output.

HINT:

Codes other than code B0100/13 may be output at this time, but they are not relevant to this check.

NG → **Replace steering wheel pad.**

OK

From the results of the above inspection, the malfunctioning part can now be considered normal. To make sure of this, use the simulation method to check.

5	Check spiral cable.

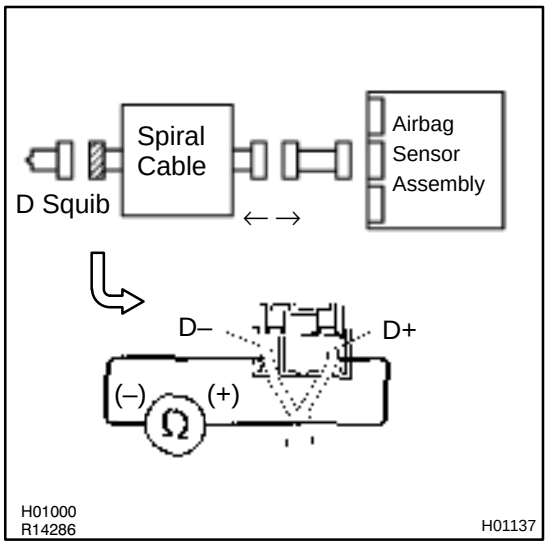

PREPARATION:

(a) Disconnect the connector between the airbag sensor assembly and the spiral cable.

(b) Release the airbag activation prevention mechanism of the spiral cable connector on the airbag sensor assembly side. (See page DI–626)

CHECK:

For the connector (on the spiral cable side) between the spiral cable and the steering wheel pad, measure the resistance between D+ and D–.

OK:

Resistance: 1 MΩ or Higher

NG → **Repair or replace spiral cable.**

OK

6	Check harness between airbag sensor assembly and spiral cable.

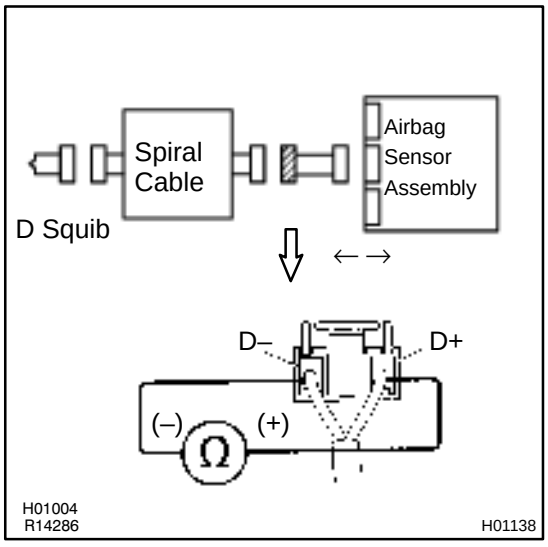

PREPARATION:

Release the airbag activation prevention mechanism of the connector (on the airbag sensor assembly side) between the airbag sensor assembly and the spiral cable. (See page DI–626)

CHECK:

For the connector (on the spiral cable side) between the airbag sensor assembly and the spiral cable, measure the resistance between D+ and D–.

OK:

Resistance: 1 MΩ or Higher

NG → **Repair or replace harness or connector between airbag sensor assembly and spiral cable.**

OK

From the results of the above inspection, the malfunctioning part can now be considered normal. To make sure of this, use the simulation method to check.

DI18R–16

DTC	B0101/14	Open in D Squib Circuit

CIRCUIT DESCRIPTION

The D squib circuit consists of the airbag sensor assembly, spiral cable and steering wheel pad.
It causes the airbag to deploy when the airbag deployment conditions are satisfied.
For details of the function of each component, see OPERATION on page RS–2.
DTC B0101/14 is recorded when an open is detected in the D squib circuit.

DTC No.	DTC Detecting Condition	Trouble Area
B0101/14	●Open circuit in D+ wire harness or D– wire harness of squib ●D squib malfunction ●Spiral cable malfunction ●Airbag sensor assembly malfunction	●Steering wheel pad (D squib) ●Spiral cable ●Airbag sensor assembly ●Wire harness

WIRING DIAGRAM

See page DI–640.

INSPECTION PROCEDURE

1	**Prepare for inspection. (See step 1 on page DI–787)**

2	**Check D squib circuit.**

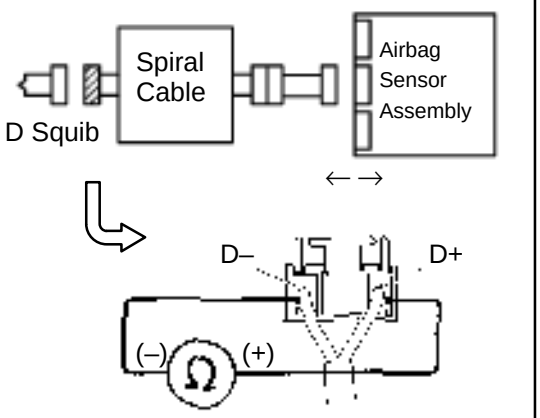

CHECK:

For the connector (on the spiral cable side) between the spiral cable and the steering wheel pad, measure the resistance between D+ and D–.

OK:

Resistance: Below 1 Ω

NG → **Go to step 5.**

OK

3	Check airbag sensor assembly.

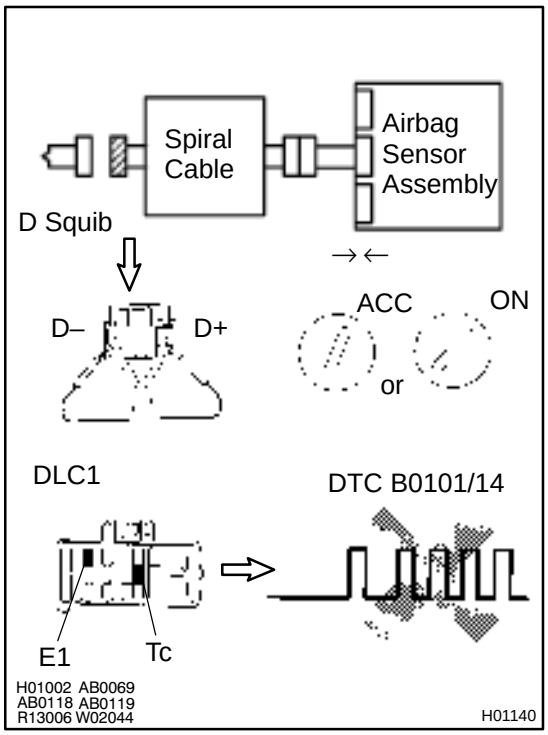

PREPARATION:

(a) Connect the connector to the airbag sensor assembly.
(b) Using a service wire, connect D+ and D– of the connector (on the spiral cable side) between the spiral cable and the steering wheel pad.
(c) Connect negative (–) terminal cable to the battery, and wait at least for 2 seconds.

CHECK:

(a) Turn ignition switch to ACC or ON, and wait at least for 20 seconds.
(b) Clear DTC stored in memory.
(See page DI–626)
(c) Turn ignition switch to LOCK, and wait at least for 20 seconds.
(d) Turn ignition switch to ACC or ON, and wait at least for 20 seconds.
(e) Check DTC.
(See page DI–626)

OK:

DTC B0101/14 is not output.

HINT:
Codes other than code B0101/14 may be output at this time, but they are not relevant to this check.

NG → **Replace airbag sensor assembly.**

OK

4	Check D squib.

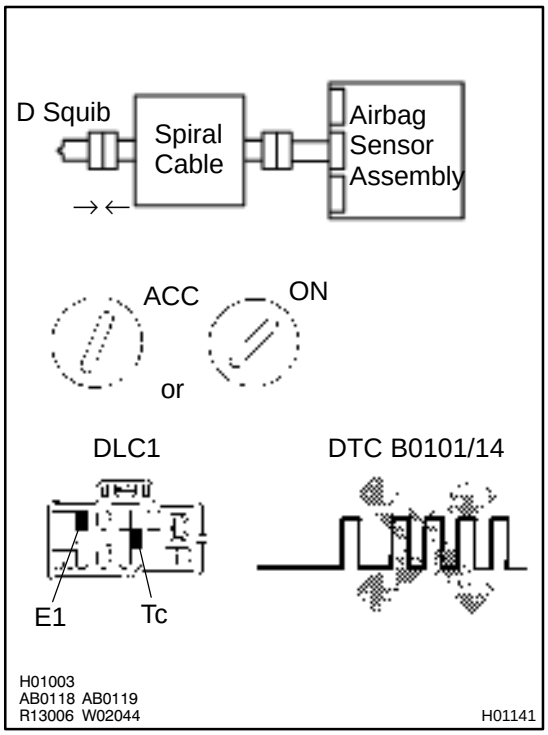

PREPARATION:

(a) Turn ignition switch to LOCK.
(b) Disconnect negative (–) terminal cable from the battery, and wait at least for 90 seconds.
(c) Connect the steering wheel pad connector.
(d) Connect negative (–) terminal cable to the battery, and wait at least for 2 seconds.

CHECK:

(a) Turn ignition switch to ACC or ON, and wait at least for 20 seconds.
(b) Clear DTC stored in memory.
(See page DI–626)
(c) Turn ignition switch to LOCK, and wait at least for 20 seconds.
(d) Turn ignition switch to ACC or ON, and wait at least for 20 seconds.
(e) Check DTC.
(See page DI–626)

OK:

DTC B0101/14 is not output.

HINT:
Codes other than code B0101/14 may be output at this time, but they are not relevant to this check.

NG → **Replace steering wheel pad.**

OK

From the results of the above inspection, the malfunctioning part can now be considered normal. To make sure of this, use the simulation method to check.

5	Check spiral cable.

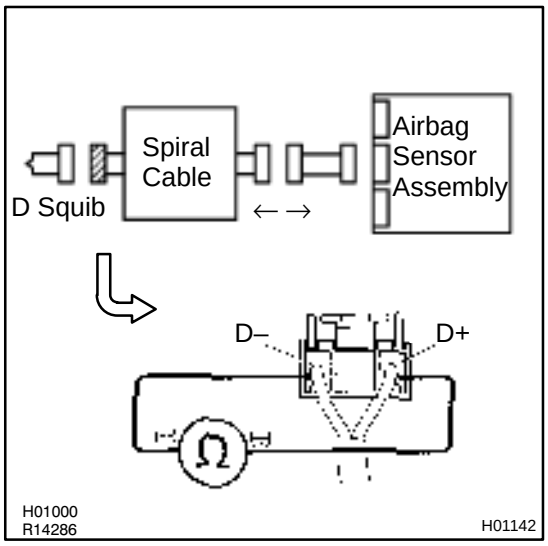

PREPARATION:
Disconnect the connector between the airbag sensor assembly and the spiral cable.

CHECK:
For the connector (on the spiral cable side) between the spiral cable and the steering wheel pad, measure the resistance between D+ and D–.

OK:

Resistance: Below 1 Ω

NG	Repair or replace spiral cable.

OK

6	Check harness between airbag sensor assembly and spiral cable.

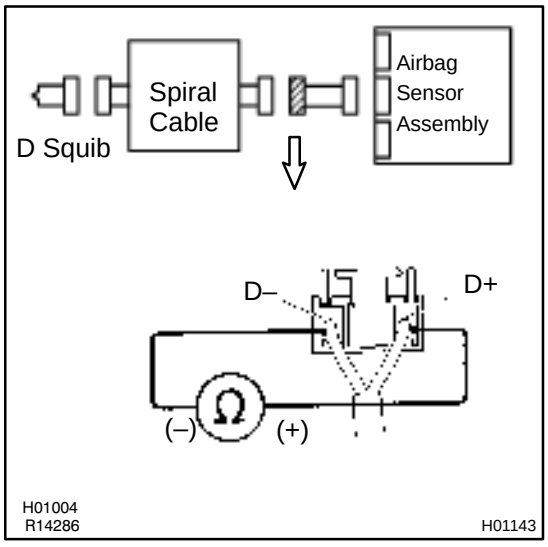

CHECK:
For the connector (on the spiral cable side) between the airbag sensor assembly and the spiral cable, measure the resistance between D+ and D–.

OK:

Resistance: Below 1 Ω

NG	Repair or replace harness or connector between airbag sensor assembly and spiral cable.

OK

From the results of the above inspection, the malfunctioning part can now be considered normal. To make sure of this, use the simulation method to check.

DI4L2–01

DTC	B0102/11	Short in D Squib Circuit (to Ground)

CIRCUIT DESCRIPTION

The D squib circuit consists of the airbag sensor assembly, spiral cable and steering wheel pad.
It causes the SRS to deploy when the SRS deployment conditions are satisfied.
For details of the function of each component, see OPERATION on page RS–2.
DTC B0102/11 is recorded when a ground short is detected in the D squib circuit.

DTC No.	DTC Detecting Condition	Trouble Area
B0102/11	●Short circuit in D squib wire harness (to ground) ●D squib malfunction ●Spiral cable malfunction ●Airbag sensor assembly malfunction	●Steering wheel pad (D squib) ●Spiral cable ●Airbag sensor assembly ●Wire harness

WIRING DIAGRAM

See page DI–640.

INSPECTION PROCEDURE

1	Prepare for inspection. (See step 1 on page DI–787)

2	Check D squib circuit.

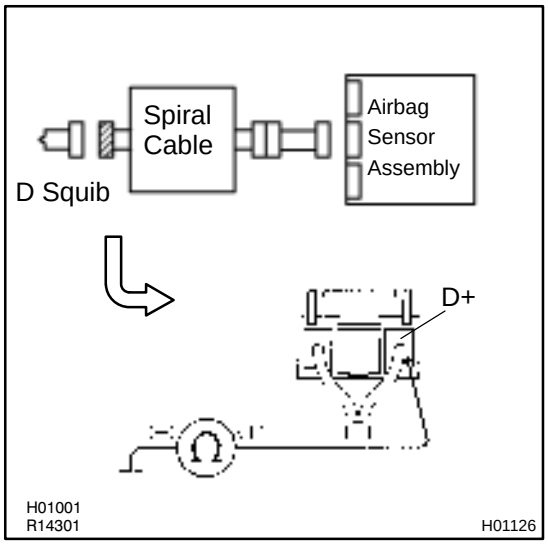

CHECK:

For the connector (on the spiral cable side) between the spiral cable and the steering wheel pad, measure the resistance between D+ and body ground.

OK:

Resistance: 1 MΩ or Higher

NG → **Go to step 5.**

OK

3	**Check airbag sensor assembly.**

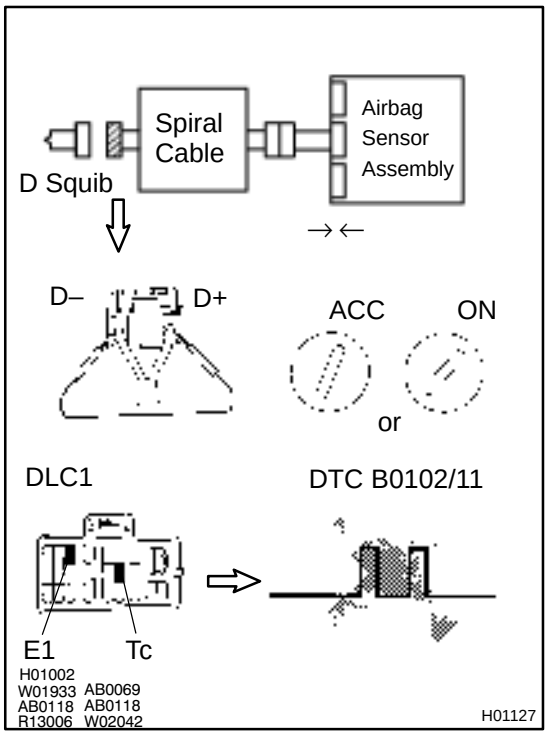

PREPARATION:

(a) Connect the connector to the airbag sensor assembly.
(b) Using a service wire, connect D+ and D– of the connector (on the spiral cable side) between the spiral cable and the steering wheel pad.
(c) Connect negative (–) terminal cable to the battery, and wait at least for 2 seconds.

CHECK:

(a) Turn ignition switch to ACC or ON, and wait at least for 20 seconds.
(b) Clear DTC stored in memory.
(See step 5 on page DI–626)
(c) Turn ignition switch to LOCK, and wait at least for 20 seconds.
(d) Turn ignition switch to ACC or ON, and wait at least for 20 seconds.
(e) Check DTC.
(See page DI–626)

OK:

DTC B0102/11 is not output.

HINT:
Codes other than code B0102/11 may be output at this time, but they are not relevant to this check.

NG → **Replace airbag sensor assembly.**

OK

4	Check D squib.

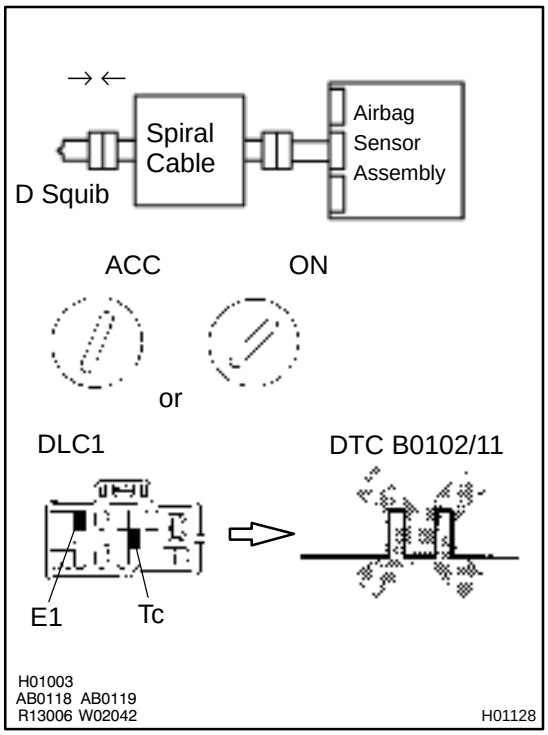

PREPARATION:

(a) Turn ignition switch to LOCK.
(b) Disconnect negative (–) terminal cable from the battery, and wait at least for 90 seconds.
(c) Connect the steering wheel pad connector.
(d) Connect negative (–) terminal cable to the battery, and wait at least for 2 seconds.

CHECK:

(a) Turn ignition switch to ACC or ON, and wait at least for 20 seconds.
(b) Clear DTC stored in memory.
(See step 5 on page DI–626)
(c) Turn ignition switch to LOCK, and wait at least for 20 seconds.
(d) Turn ignition switch to ACC or ON, and wait at least for 20 seconds.
(e) Check DTC.
(See page DI–626)

OK:

DTC B0102/11 is not output.

HINT:
Codes other than code B0102/11 may be output at this time, but they are not relevant to this check.

NG → **Replace steering wheel pad.**

OK

From the results of the above inspection, the malfunctioning part can now be considered normal. To make sure of this, use the simulation method to check. If the malfunctioning part can not be detected by the simulation method, replace all SRS components including the wire harness.

5	Check spiral cable.

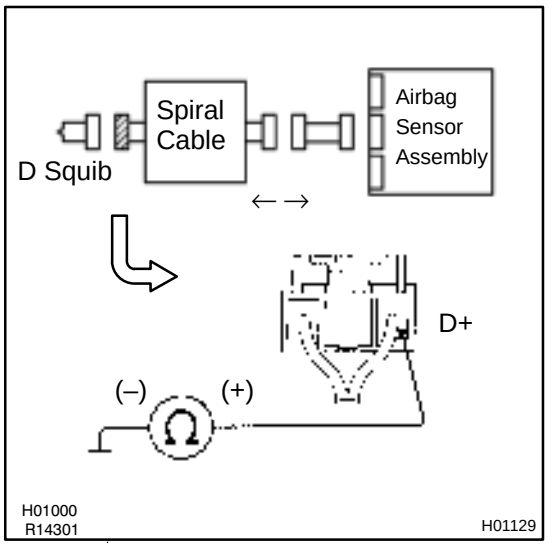

PREPARATION:
Disconnect the connector between the airbag sensor assembly and the spiral cable.
CHECK:
For the connector (on the spiral cable side) between the steering wheel pad and the spiral cable, measure the resistance between D+ and body ground.
OK:
Resistance: 1 MΩ or Higher

NG → **Repair or replace spiral cable.**

OK

6	Check harness between airbag sensor assembly and spiral cable.

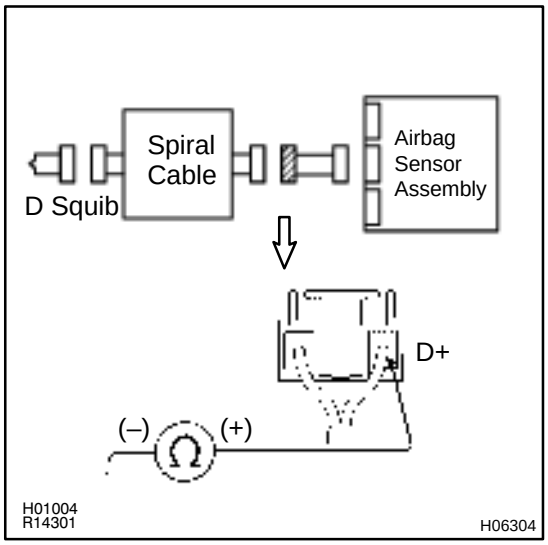

CHECK:
For the connector (on the spiral cable side) between the spiral cable and airbag sensor assembly, measure the resistance between D+ and body ground.
OK:
Resistance: 1 MΩ or Higher

NG → **Repair or replace harness between airbag sensor assembly and spiral cable.**

OK

From the results of the above inspection, the malfunctioning part can now be considered normal. To make sure of this, use the simulation method to check. If the malfunctioning part can not be detected by the simulation method, replace all SRS components including the wire harness.

DI4L3–01

DTC	B0103/12	Short in D Squib Circuit (to B+)

CIRCUIT DESCRIPTION

The D squib circuit consists of the airbag sensor assembly, spiral cable and steering wheel pad.
It causes the SRS to deploy when the SRS deployment conditions are satisfied.
For details of the function of each component, see OPERATION on page RS–2.
DTC B0103/12 is recorded when a B+ short is detected in the D squib circuit.

DTC No.	DTC Detecting Condition	Trouble Area
B0103/12	●Short circuit in D squib wire harness (to B+) ●D squib malfunction ●Spiral cable malfunction ●Airbag sensor assembly malfunction	●Steering wheel pad (D squib) ●Spiral cable ●Airbag sensor assembly ●Wire harness

WIRING DIAGRAM

See page DI–640.

INSPECTION PROCEDURE

1	**Prepare for inspection. (See step 1 on page DI–787)**

2	**Check D squib circuit.**

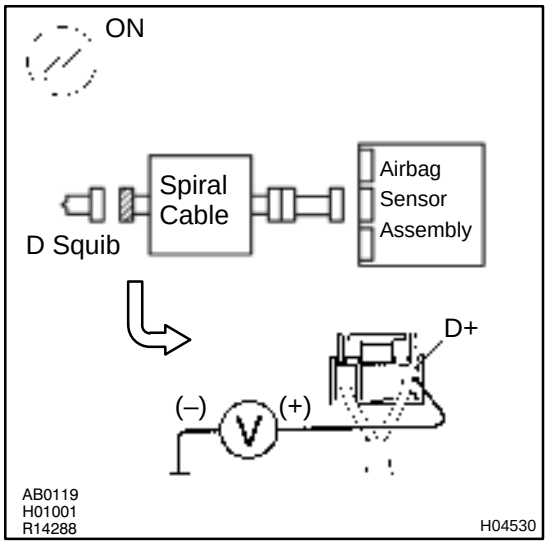

CHECK:

(a) Turn ignition switch to ON.

(b) For the connector (on the spiral cable side) between the spiral cable and the steering wheel pad, measure the voltage between D+ and body ground.

OK:

Voltage: 0 V

NG → **Go to step 5.**

OK

3	Check airbag sensor assembly.

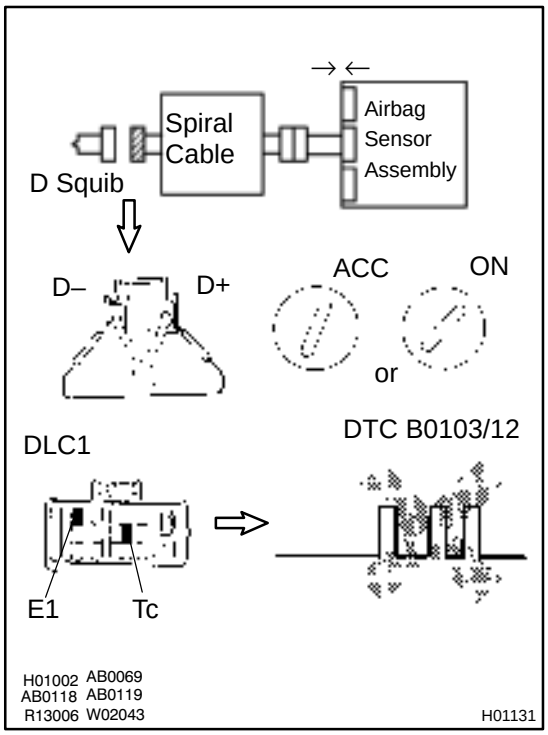

PREPARATION:

(a) Connect the connector to the airbag sensor assembly.
(b) Using a service wire, connect D+ and D– of the connector (on the spiral cable side) between the spiral cable and the steering wheel pad.
(c) Connect negative (–) terminal cable to the battery, and wait at least for 2 seconds.

CHECK:

(a) Turn ignition switch to ACC or ON, and wait at least for 20 seconds.
(b) Clear DTC stored in memory.
(See step 5 on page DI–626)
(c) Turn ignition switch to LOCK, and wait at least for 20 seconds.
(d) Turn ignition switch to ACC or ON, and wait at least for 20 seconds.
(e) Check DTC.
(See page DI–626)

OK:

DTC B0103/12 is not output.

HINT:
Codes other than code B0103/12 may be output at this time, but they are not relevant to this check.

NG → **Replace airbag sensor assembly.**

OK

4	**Check D squib.**

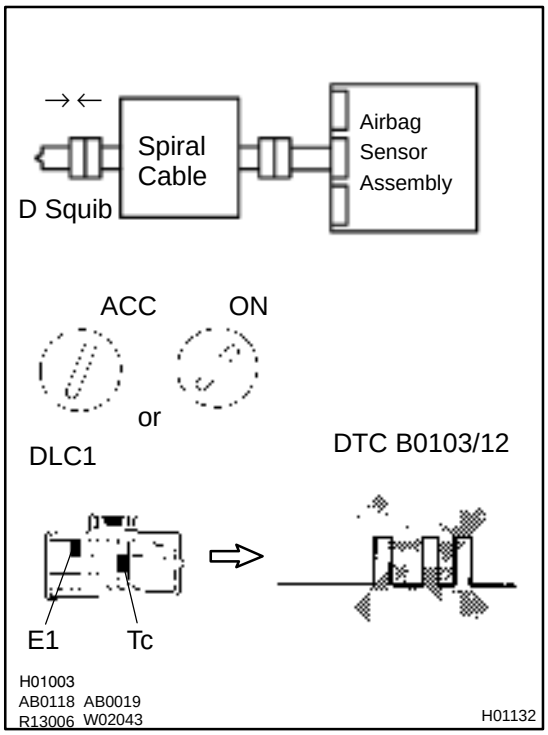

PREPARATION:

(a) Turn ignition switch to LOCK.
(b) Disconnect negative (–) terminal cable from the battery, and wait at least for 90 seconds.
(c) Connect the steering wheel pad connector.
(d) Connect negative (–) terminal cable to the battery, and wait at least for 2 seconds.

CHECK:

(a) Turn ignition switch to ACC or ON, and wait at least for 20 seconds.
(b) Clear DTC stored in memory.
(See step 5 on page DI–626)
(c) Turn ignition switch to LOCK, and wait at least for 20 seconds.
(d) Turn ignition switch to ACC or ON, and wait at least for 20 seconds.
(e) Check DTC.
(See page DI–626)

OK:

DTC B0103/12 is not output.

HINT:
Codes other than code B0103/12 may be output at this time, but they are not relevant to this check.

NG → **Replace steering wheel pad.**

OK →

From the results of the above inspection, the malfunctioning part can now be considered normal. To make sure of this, use the simulation method to check. If the malfunctioning part can not be detected by the simulation method, replace all SRS components including the wire harness.

5	Check spiral cable.

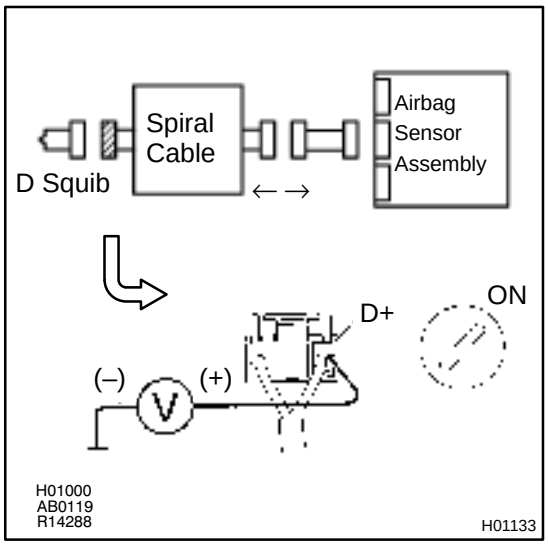

PREPARATION:

(a) Turn ignition switch to LOCK.

(b) Disconnect the connector between the airbag sensor assembly and the spiral cable.

CHECK:

(a) Turn ignition switch to ON.

(b) For the connector (on the spiral cable side) between the spiral cable and the steering wheel pad, measure the voltage between D+ and body ground.

OK:

Voltage: 0 V

NG	Repair or replace spiral cable.

OK

6	Check harness between airbag sensor assembly and spiral cable.

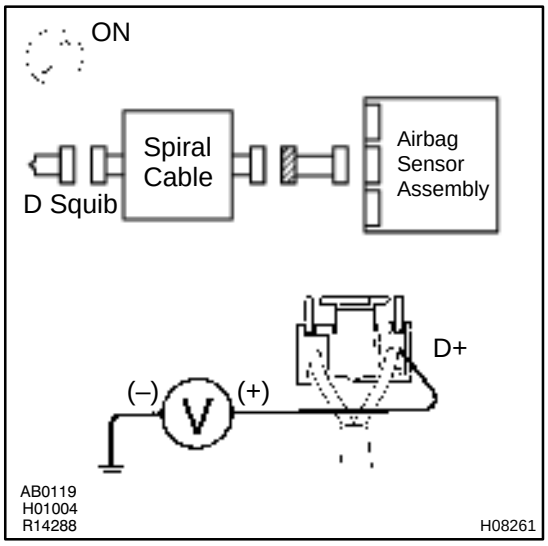

CHECK:

(a) Turn ignition switch to ON.

(b) For the connector (on the spiral cable side) between the spiral cable and airbag sensor assembly, measure the voltage between D+ and body ground.

OK:

Voltage: 0 V

NG	Repair or replace harness between airbag sensor assembly and spiral cable.

OK

From the results of the above inspection, the malfunctioning part can now be considered normal. To make sure of this, use the simulation method to check. If the malfunctioning part can not be detected by the simulation method, replace all SRS components including the wire harness.

DI1B6–12

DTC	B0105/53	Short in P Squib Circuit

CIRCUIT DESCRIPTION

The P squib circuit consists of the airbag sensor assembly and front passenger airbag assembly.
It causes the SRS to deploy when the SRS deployment conditions are satisfied.
For details of the function of each component, see OPERATION on page RS–2.
DTC B0105/53 is recorded when a short is detected in the P squib circuit.

DTC No.	DTC Detecting Condition	Trouble Area
B0105/53	●Short circuit in P squib wire harness ●P squib malfunction ●Airbag sensor assembly malfunction	●Front passenger airbag assembly (P squib) ●Airbag sensor assembly ●Wire harness

WIRING DIAGRAM

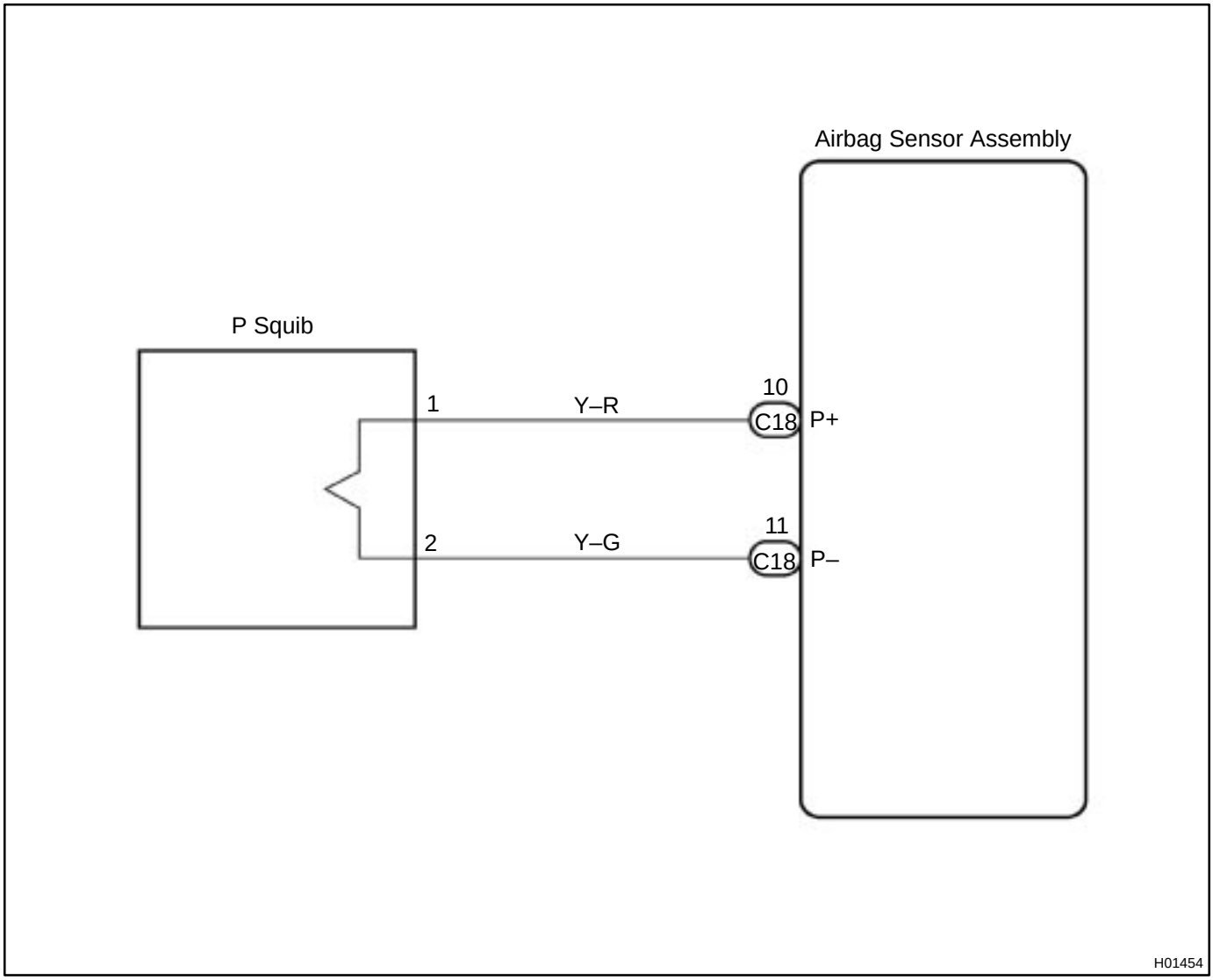

INSPECTION PROCEDURE

1	**Prepare for inspection. (See step 1 on page DI–787)**

2	**Check P squib circuit.**

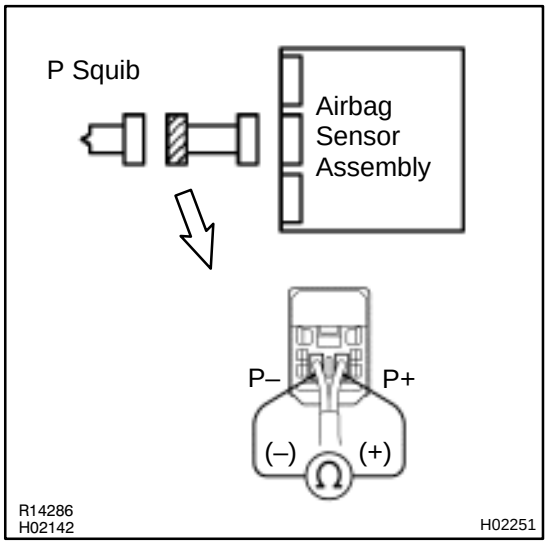

PREPARATION:

Release airbag activation prevention mechanism of the connector (on the airbag sensor assembly side) between the front passenger airbag assembly and the airbag sensor assembly. (See page DI–626)

CHECK:

For the connector (on the front passenger airbag assembly side) between the front passenger airbag assembly and the airbag sensor assembly, measure the resistance between P+ and P–.

OK:

Resistance: 1 MΩ or Higher

NG → **Repair or replace harness or connector between front passenger airbag assembly and airbag sensor assembly.**

OK

3	Check airbag sensor assembly.

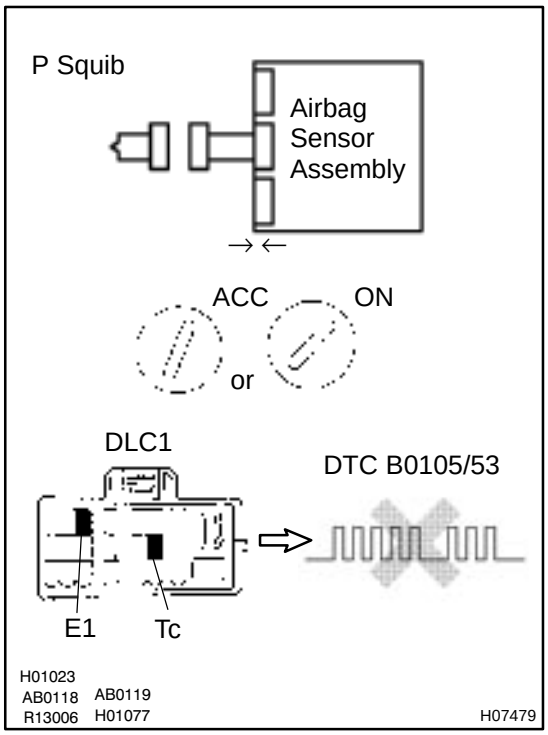

PREPARATION:

(a) Connect the connector to the airbag sensor assembly.
(b) Connect negative (–) terminal cable to the battery, and wait at least for 2 seconds.

CHECK:

(a) Turn ignition switch to ACC or ON and wait at least for 20 seconds.
(b) Clear DTC stored in memory.
(See page DI–626)
(c) Turn ignition switch to LOCK, and wait at least for 20 seconds.
(d) Turn ignition switch to ACC or ON, and wait at least for 20 seconds.
(e) Check DTC.
(See page DI–626)

OK:

DTC B0105/53 is not output.

HINT:
Codes other than code B0105/53 may be output at this time, but they are not relevant to this check.

NG → **Replace airbag sensor assembly.**

OK

4	Check P squib.

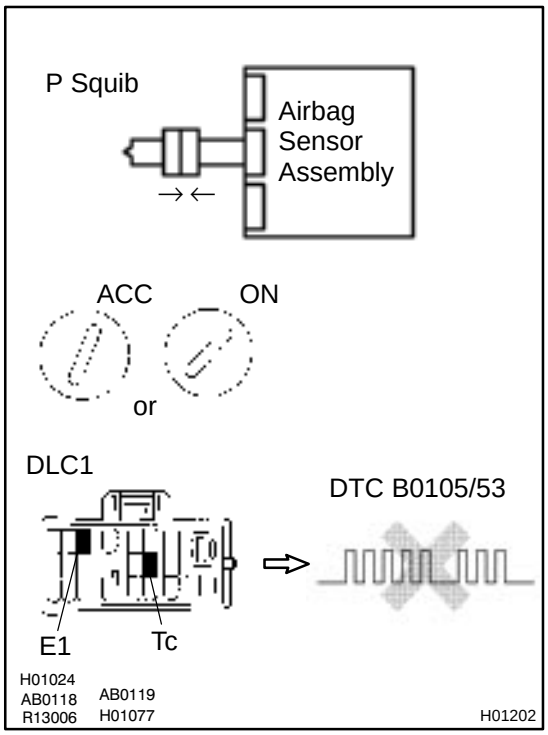

PREPARATION:

(a) Turn ignition switch to LOCK.
(b) Disconnect negative (–) terminal cable from the battery, and wait at least for 90 seconds.
(c) Connect the front passenger airbag assembly connector.
(d) Connect negative (–) terminal cable to the battery, and wait at least for 2 seconds.

CHECK:

(a) Turn ignition switch to LOOK, and wait at least for 20 seconds.
(b) Turn ignition switch to ACC or ON, and wait at least for 20 seconds.
(c) Clear DTC stored in memory.
(See page DI–626)
(d) Turn ignition switch to LOCK, and wait at least for 20 seconds.
(e) Turn ignition switch to ACC or ON, and wait at least for 20 seconds.
(f) Check DTC.
(See page DI–626)

OK:

DTC B0105/53 is not output.

HINT:
Codes other than code B0105/53 may be output at this time, but they are not relevant to this check.

NG → **Replace front passenger airbag assembly.**

OK

From the results of the above inspection, the malfunctioning part can now be considered normal. To make sure of this, use the simulation method to check.

DI1B7–17

DTC	B0106/54	Open in P Squib Circuit

CIRCUIT DESCRIPTION

The P squib circuit consists of the airbag sensor assembly and front passenger airbag assembly.
It causes the SRS to deploy when the SRS deployment conditions are satisfied.
For details of the function of each component, see OPERATION on page RS–2.
DTC B0106/54 is recorded when an open is detected in the P squib circuit.

DTC No.	DTC Detecting Condition	Trouble Area
B0106/54	●Open circuit in P+ wire harness or P– wire harness of squib ●P squib malfunction ●Airbag sensor assembly malfunction	●Front passenger airbag assembly (P squib) ●Airbag sensor assembly ●Wire harness

WIRING DIAGRAM

See page DI–657.

INSPECTION PROCEDURE

1	**Prepare for inspection. (See step 1 on page DI–787)**

2	**Check P squib circuit.**

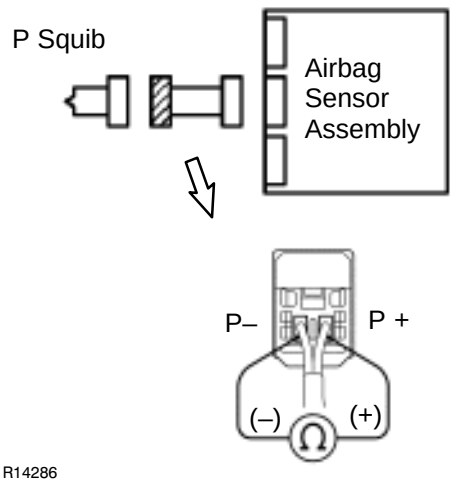

CHECK:

For the connector (on the front passenger airbag assembly side) between the front passenger airbag assembly and the airbag sensor assembly, measure the resistance between P+ and P–.

OK:

Resistance: Below 1 Ω

NG → **Repair or replace harness or connector between front passenger airbag assembly and airbag sensor assembly.**

OK

3	Check airbag sensor assembly.

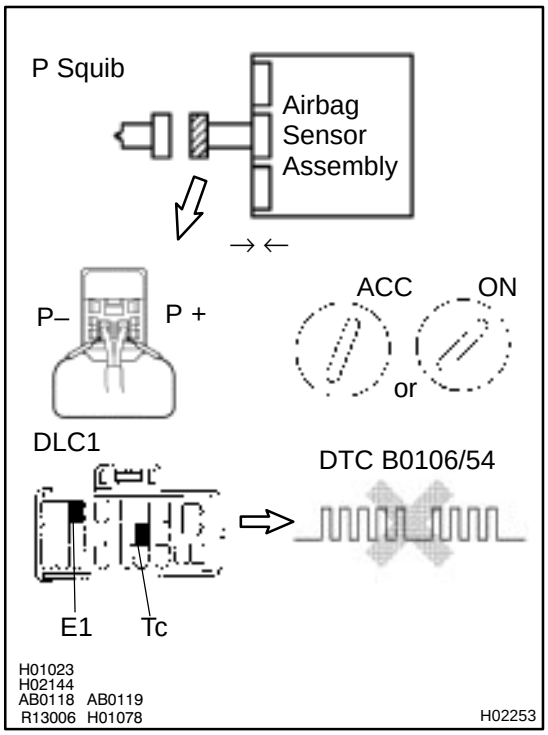

PREPARATION:

(a) Connect the connector to the airbag sensor assembly.

(b) Using a service wire, connect P+ and P– of the connector (on the front passenger airbag assembly side) between the front passenger airbag assembly and the airbag sensor assembly.

(c) Connect negative (–) terminal cable to the battery, and wait at least for 2 seconds.

CHECK:

(a) Turn ignition switch to ACC or ON and wait at least for 20 seconds.

(b) Clear DTC stored in memory.
(See page DI–626)

(c) Turn ignition switch to LOCK, and wait at least for 20 seconds.

(d) Turn ignition switch to ACC or ON, and wait at least for 20 seconds.

(e) Check DTC.
(See page DI–626)

OK:

DTC B0106/54 is not output.

HINT:

Codes other than code B0106/54 may be output at this time, but they are not relevant to this check.

NG	Replace airbag sensor assembly.

OK

4	Check P squib.

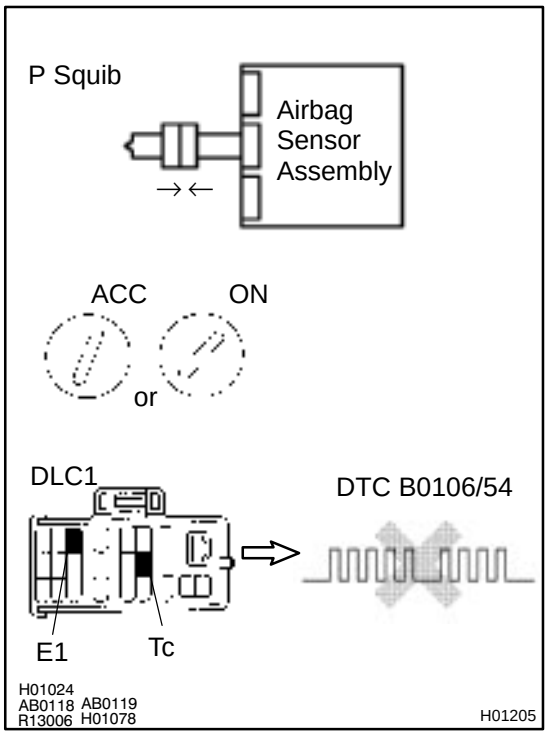

PREPARATION:

(a) Turn ignition switch to LOCK.
(b) Disconnect negative (–) terminal cable from the battery, and wait at least for 90 seconds.
(c) Connect the front passenger airbag assembly connector.
(d) Connect negative (–) terminal cable to the battery, and wait at least for 2 seconds.

CHECK:

(a) Turn ignition switch to ACC or ON, and wait at least for 20 seconds.
(b) Clear DTC stored in memory.
(See page DI–626)
(c) Turn ignition switch to LOCK, and wait at least for 20 seconds.
(d) Turn ignition switch to ACC or ON, and wait at least for 20 seconds.
(e) Check DTC.
(See page DI–626)

OK:

DTC B0106/54 is not output.

HINT:
Codes other than code B0106/54 may be output at this time, but they are not relevant to this check.

NG	Replace front passenger airbag assembly.

OK

From the results of the above inspection, the malfunctioning part can now be considered normal. To make sure of this, use the simulation method to check.

DI1B8–11

DTC	B0107/51	Short in P Squib Circuit (to Ground)

CIRCUIT DESCRIPTION

The P squib circuit consists of the airbag sensor assembly and front passenger airbag assembly.
It causes the SRS to deploy when the SRS deployment conditions are satisfied.
For details of the function of each component, see OPERATION on page RS–2.
DTC B0107/51 is recorded when ground short is detected in the P squib circuit.

DTC No.	DTC Detecting Condition	Trouble Area
B0107/51	●Short circuit in P squib wire harness (to ground) ●P squib malfunction ●Airbag sensor assembly malfunction	●Front passenger airbag assembly (P squib) ●Airbag sensor assembly ●Wire harness

WIRING DIAGRAM

See page DI–657.

INSPECTION PROCEDURE

1	**Prepare for inspection. (See step 1 on page DI–787)**

2	**Check P squib circuit.**

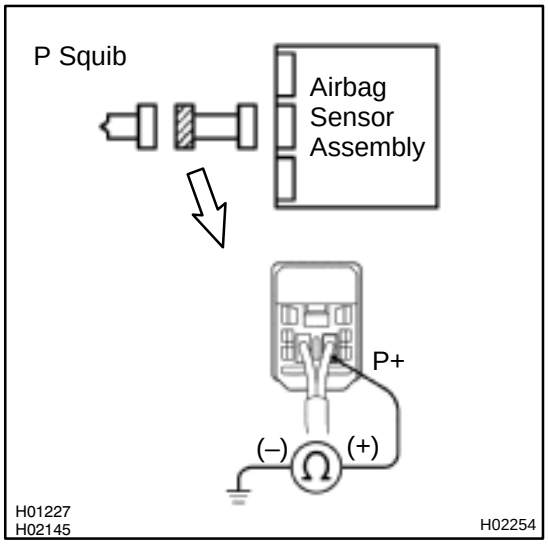

CHECK:

For the connector (on the front passenger airbag assembly side) between the front passenger airbag assembly and the airbag sensor assembly, measure the resistance between P+ and body ground.

OK:

Resistance: 1 MΩ or Higher

NG → **Repair or replace harness or connector between front passenger airbag assembly and airbag sensor assembly.**

OK

3	Check airbag sensor assembly.

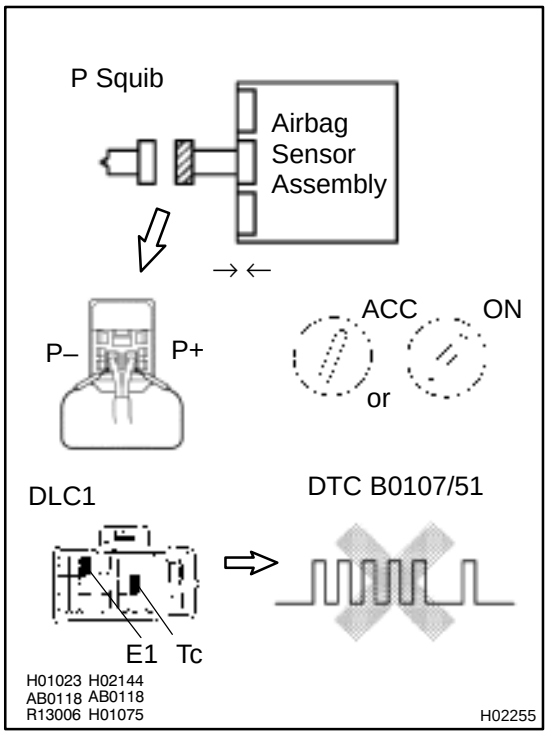

PREPARATION:

(a) Connect the connector to the airbag sensor assembly.

(b) Using a service wire, connect P+ and P– of the connector (on the front passenger airbag assembly side) between the front passenger airbag assembly and the airbag sensor assembly.

(c) Connect negative (–) terminal cable to the battery, and wait at least for 2 seconds.

CHECK:

(a) Turn ignition switch to ACC or ON and wait at least for 20 seconds.

(b) Clear DTC stored in memory.
(See step 5 on page DI–626)

(c) Turn ignition switch to LOCK, and wait at least for 20 seconds.

(d) Turn ignition switch to ACC or ON, and wait at least for 20 seconds.

(e) Check DTC.
(See page DI–626)

OK:

DTC B0107/51 is not output.

HINT:

Codes other than code B0107/51 may be output at this time, but they are not relevant to this check.

NG	Replace airbag sensor assembly.

OK

4	Check P squib.

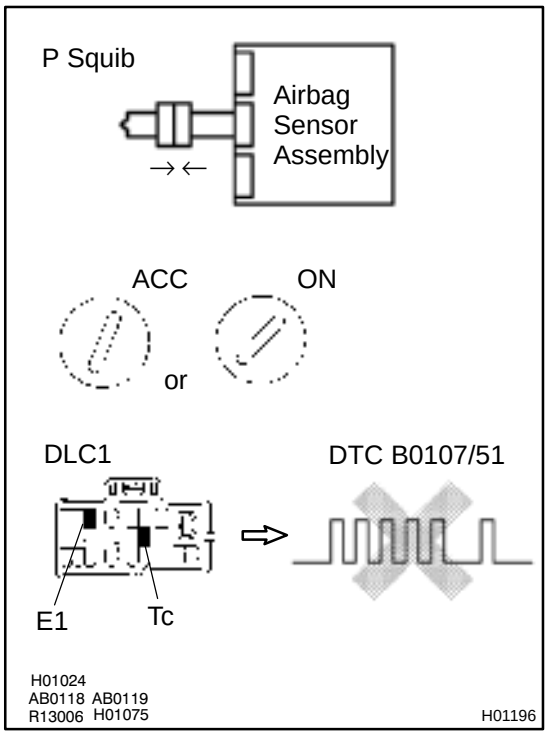

PREPARATION:

(a) Turn ignition switch to LOCK.
(b) Disconnect negative (–) terminal cable from the battery, and wait at least for 90 seconds.
(c) Connect the front passenger airbag assembly connector.
(d) Connect negative (–) terminal cable to the battery, and wait at least for 2 seconds.

CHECK:

(a) Turn ignition switch to ACC or ON, and wait at least for 20 seconds.
(b) Clear DTC stored in memory.
(See stpe 5 on page DI–626)
(c) Turn ignition switch to LOCK, and wait at least for 20 seconds.
(d) Turn ignition switch to ACC or ON, and wait at least for 20 seconds.
(e) Check DTC.
(See page DI–626)

OK:

DTC B0107/51 is not output.

HINT:
Codes other than code B0107/51 may be output at this time, but they are not relevant to this check.

NG → **Replace front passenger airbag assembly.**

OK

From the results of the above inspection, the malfunctioning part can now be considered normal. To make sure of this, use the simulation method to check. If the malfunctioning part can not be detected by the simulation method, replace all SRS components including the wire harness.

DI1B9–16

DTC	B0108/52	Short in P Squib Circuit (to B+)

CIRCUIT DESCRIPTION

The P squib circuit consists of the airbag sensor assembly and front passenger airbag assembly.
It causes the SRS to deploy when the SRS deployment conditions are satisfied.
For details of the function of each component, see OPERATION on page RS–2.
DTC B0108/52 is recorded when a B+ short is detected in the P squib circuit.

DTC No.	DTC Detecting Condition	Trouble Area
B0108/52	●Short circuit in P squib wire harness (to B+) ●P squib malfunction ●Airbag sensor assembly malfunction	●Front passenger airbag assembly (P squib) ●Airbag sensor assembly ●Wire harness

WIRING DIAGRAM

See page DI–657.

INSPECTION PROCEDURE

1	**Prepare for inspection. (See step 1 on page DI–787)**

2	**Check P squib circuit.**

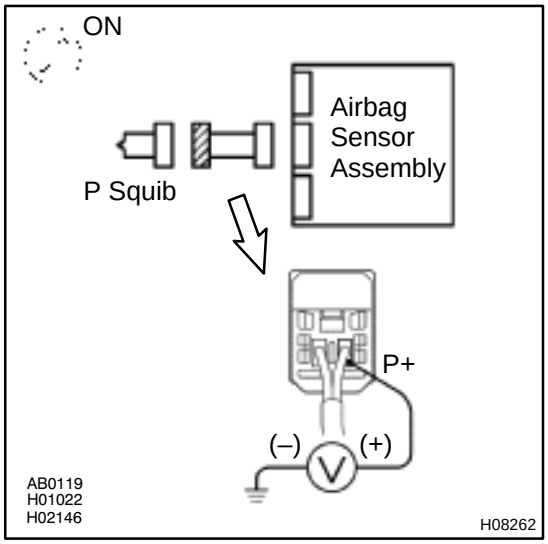

CHECK:

(a) Turn ignition switch to ON.

(b) For the connector (on the front passenger airbag assembly side) between the front passenger airbag assembly and the airbag sensor assembly, measure the voltage between the P+ and body ground.

OK:

Voltage: 0 V

NG → **Repair or replace harness or connector between front passenger airbag assembly and airbag sensor assembly.**

OK

3	Check airbag sensor assembly.

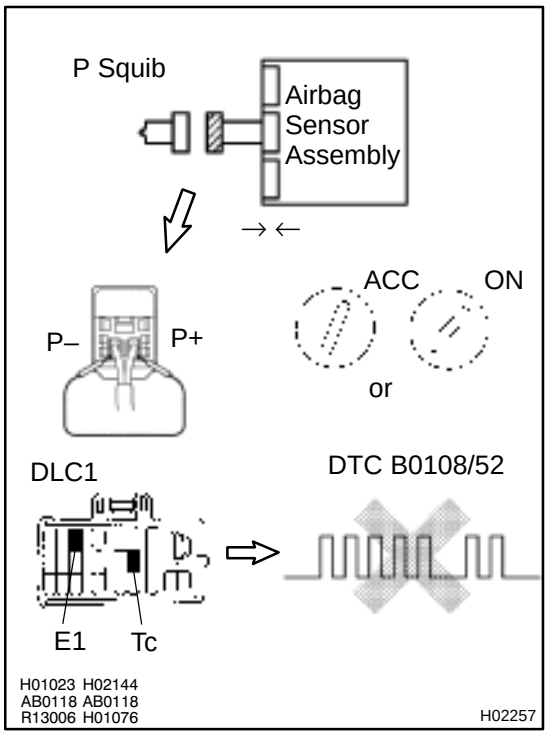

PREPARATION:

(a) Connect the connector to the airbag sensor assembly.

(b) Using a service wire, connect P+ and P– of the connector (on the front passenger airbag assembly side) between the front passenger airbag assembly and the airbag sensor assembly.

(c) Connect negative (–) terminal cable to the battery, and wait at least for 2 seconds.

CHECK:

(a) Turn ignition switch to ACC or ON and wait at least for 20 seconds.

(b) Clear DTC stored in memory.
(See step 5 on page DI–626)

(c) Turn ignition switch to LOCK, and wait at least for 20 seconds.

(d) Turn ignition switch to ACC or ON, and wait at least for 20 seconds.

(e) Check DTC.
(See page DI–626)

OK:

DTC B0108/52 is not output.

HINT:

Codes other than code B0108/52 may be output at this time, but they are not relevant to this check.

NG	Replace airbag sensor assembly.

OK

4	Check P squib.

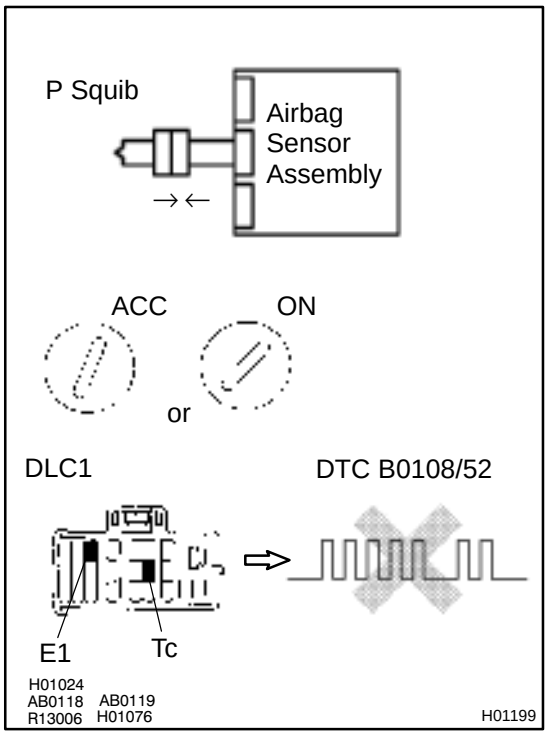

PREPARATION:

(a) Turn ignition switch to LOCK.
(b) Disconnect negative (–) terminal cable from the battery, and wait at least for 90 seconds.
(c) Connect the front passenger airbag assembly connector.
(d) Connect negative (–) terminal cable to the battery, and wait at least for 2 seconds.

CHECK:

(a) Turn ignition switch to ACC or ON, and wait at least for 20 seconds.
(b) Clear DTC stored in memory.
(See page DI–626)
(c) Turn ignition switch to LOCK, and wait at least for 20 seconds.
(d) Turn ignition switch to ACC or ON, and wait at least for 20 seconds.
(e) Check DTC.
(See page DI–626)

OK:

DTC B0108/52 is not output.

HINT:
Codes other than code B0108/52 may be output at this time, but they are not relevant to this check.

NG → **Replace front passenger airbag assembly.**

OK

From the results of the above inspection, the malfunctioning part can now be considered normal. To make sure of this, use the simulation method to check. If the malfunctioning part can not be detected by the simulation method, replace all SRS components including the wire harness.

DTC	B0110/43	Short in Side Squib (RH) Circuit (TMC Made)

CIRCUIT DESCRIPTION

The side squib (RH) circuit consists of the airbag sensor assembly and side airbag assembly (RH).
It causes the SRS to deploy when the SRS deployment conditions are satisfied.
For details of the function of each component, see OPERATION on page RS–2.
DTC B0110/43 is recorded when a short is detected in the side squib (RH) circuit.

DTC No.	DTC Detecting Condition	Trouble Area
B0110/43	●Short circuit between SFR+ wire harness and SFR– wire harness of squib ●Side squib (RH) malfunction ●Airbag sensor assembly malfunction	●Side airbag assembly (RH) ●Airbag sensor assembly ●Wire harness

WIRING DIAGRAM

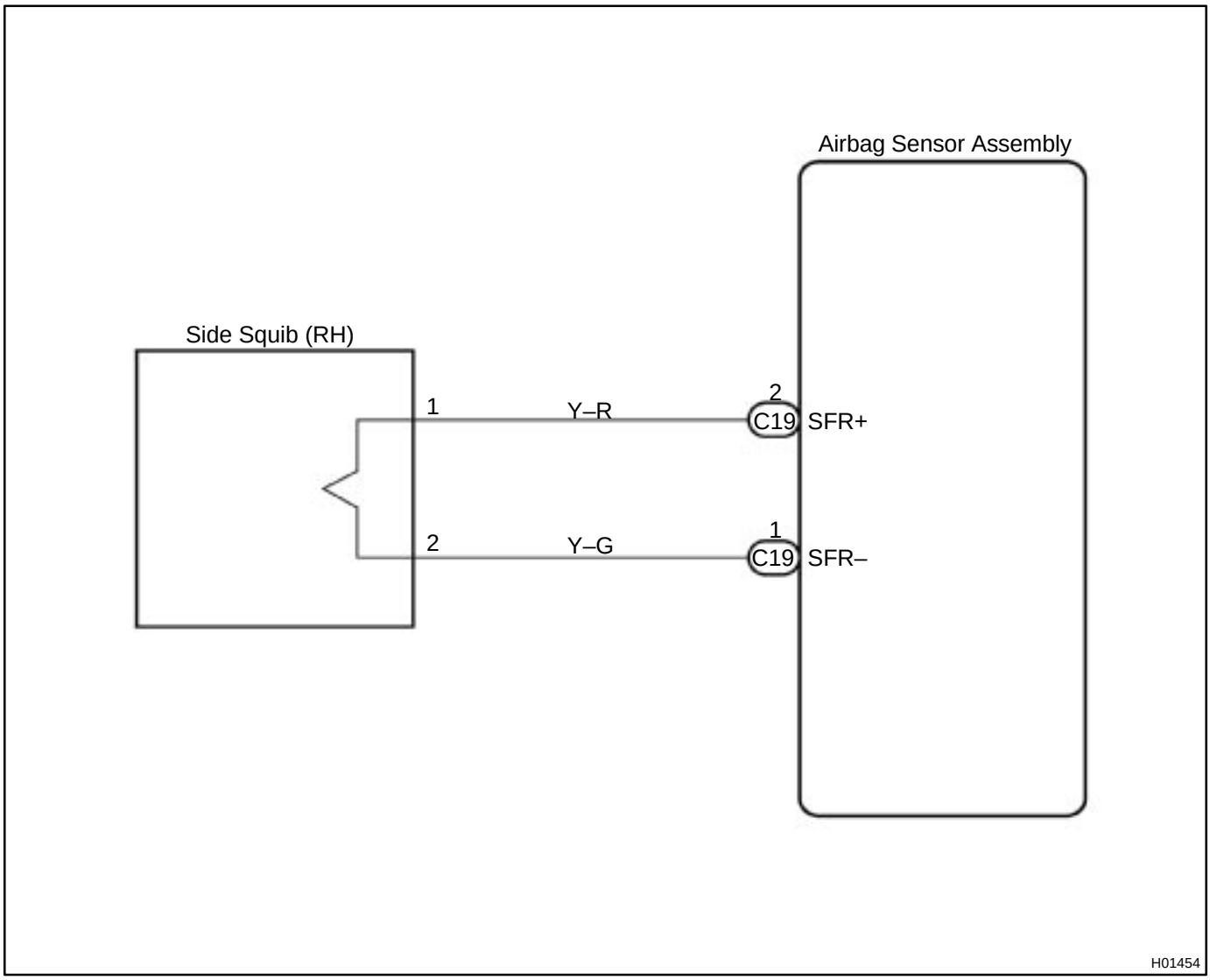

INSPECTION PROCEDURE

1	**Prepare for inspection. (See step 1 on page DI–787)**

2	**Check side squib (RH) circuit.**

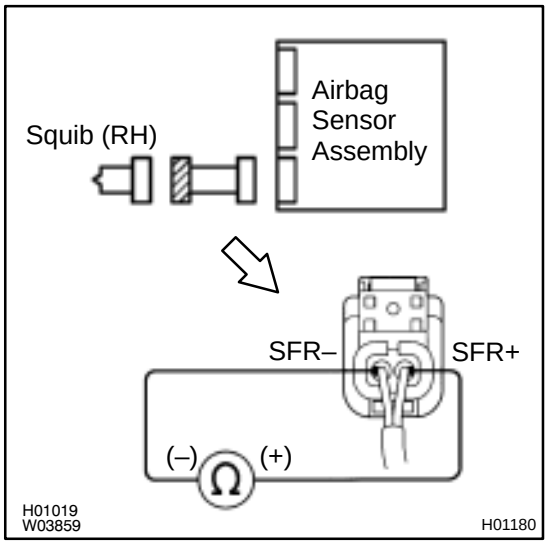

PREPARATION:

Release the airbag activation prevention mechanism of the connector (on the airbag sensor assembly side) between the airbag sensor assembly and the side airbag assembly (RH). (See page DI–626)

CHECK:

For the connector (on the side airbag assembly side) between the side airbag assembly (RH) and the airbag sensor assembly, measure the resistance between SFR+ and SFR–.

OK:

Resistance: 1 MΩ or Higher

NG → **Repair or replace harness or connector between side airbag assembly (RH) and airbag sensor assembly.**

OK

3	Check airbag sensor assembly.

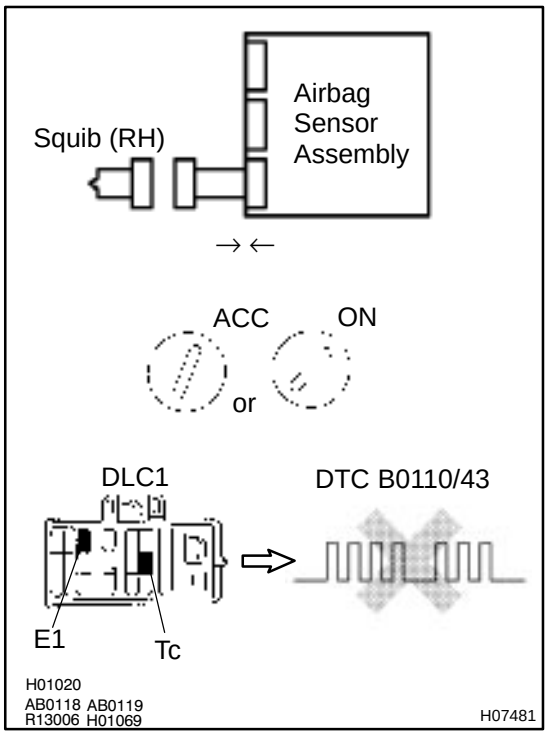

PREPARATION:

(a) Connect the connector to the airbag sensor assembly.
(b) Connect negative (–) terminal cable to the battery, and wait at least for 2 seconds.

CHECK:

(a) Turn ignition switch to ACC or ON and wait at least for 20 seconds.
(b) Clear DTC stored in memory.
(See page DI–626)
(c) Turn ignition switch to LOCK, and wait at least for 20 seconds.
(d) Turn ignition switch to ACC or ON, and wait at least for 20 seconds.
(e) Check DTC.
(See page DI–626)

OK:

DTC B0110/43 is not output.

HINT:
Codes other than code B0110/43 may be output at this time, but they are not relevant to this check.

NG → **Replace airbag sensor assembly.**

OK

4	Check side squib (RH).

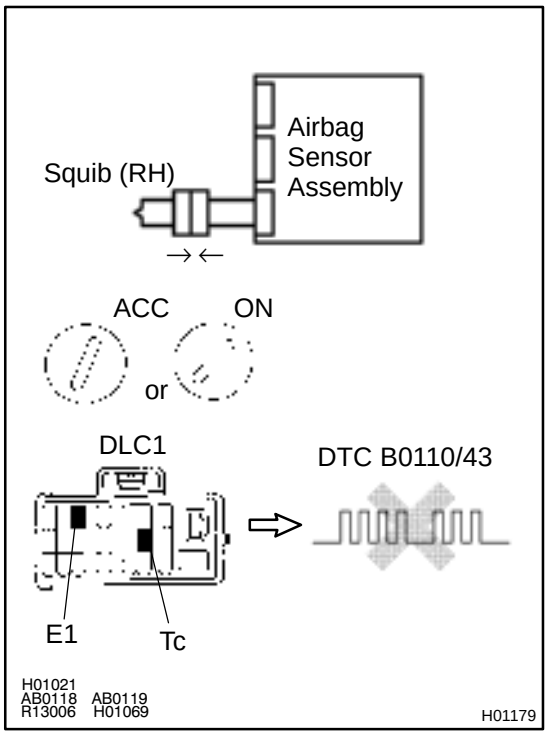

PREPARATION:

(a) Turn ignition switch to LOCK.
(b) Disconnect negative (–) terminal cable from the battery, and wait at least for 90 seconds.
(c) Connect the side airbag assembly (RH) connector.
(d) Connect negative (–) terminal cable to the battery, and wait at least for 2 seconds.

CHECK:

(a) Turn ignition switch to LOOK, and wait at least for 20 second.
(b) Turn ignition switch to ACC or ON, and wait at least for 20 seconds.
(c) Clear DTC stored in memory.
(See page DI–626)
(d) Turn ignition switch to LOCK, and wait at least for 20 seconds.
(e) Turn ignition switch to ACC or ON, and wait at least for 20 seconds.
(f) Check DTC.
(See page DI–626)

OK:

DTC B0110/43 is not output.

HINT:
Codes other than code B0110/43 may be output at this time, but they are not relevant to this check.

NG → **Replace side airbag assembly (RH).**

OK

From the results of the above inspection, the malfunctioning part can now be considered normal. To make sure of this, use the simulation method to check.

DI1KY–02

DTC	B0110/43	Short in Side Squib (RH) Circuit (TMMK Made)

CIRCUIT DESCRIPTION

The side squib (RH) circuit consists of the airbag sensor assembly and side airbag assembly (RH).
It causes the SRS to deploy when the SRS deployment conditions are satisfied.
For details of the function of each component, see OPERATION on page RS–2.
DTC B0110/43 is recorded when a short is detected in the side squib (RH) circuit.

DTC No.	DTC Detecting Condition	Trouble Area
B0110/43	●Short circuit between SFR+ wire harness and SFR– wire harness of squib ●Side squib (RH) malfunction ●Airbag sensor assembly malfunction	●Side airbag assembly (RH) ●Airbag sensor assembly ●Wire harness ●Sub wire harness

WIRING DIAGRAM

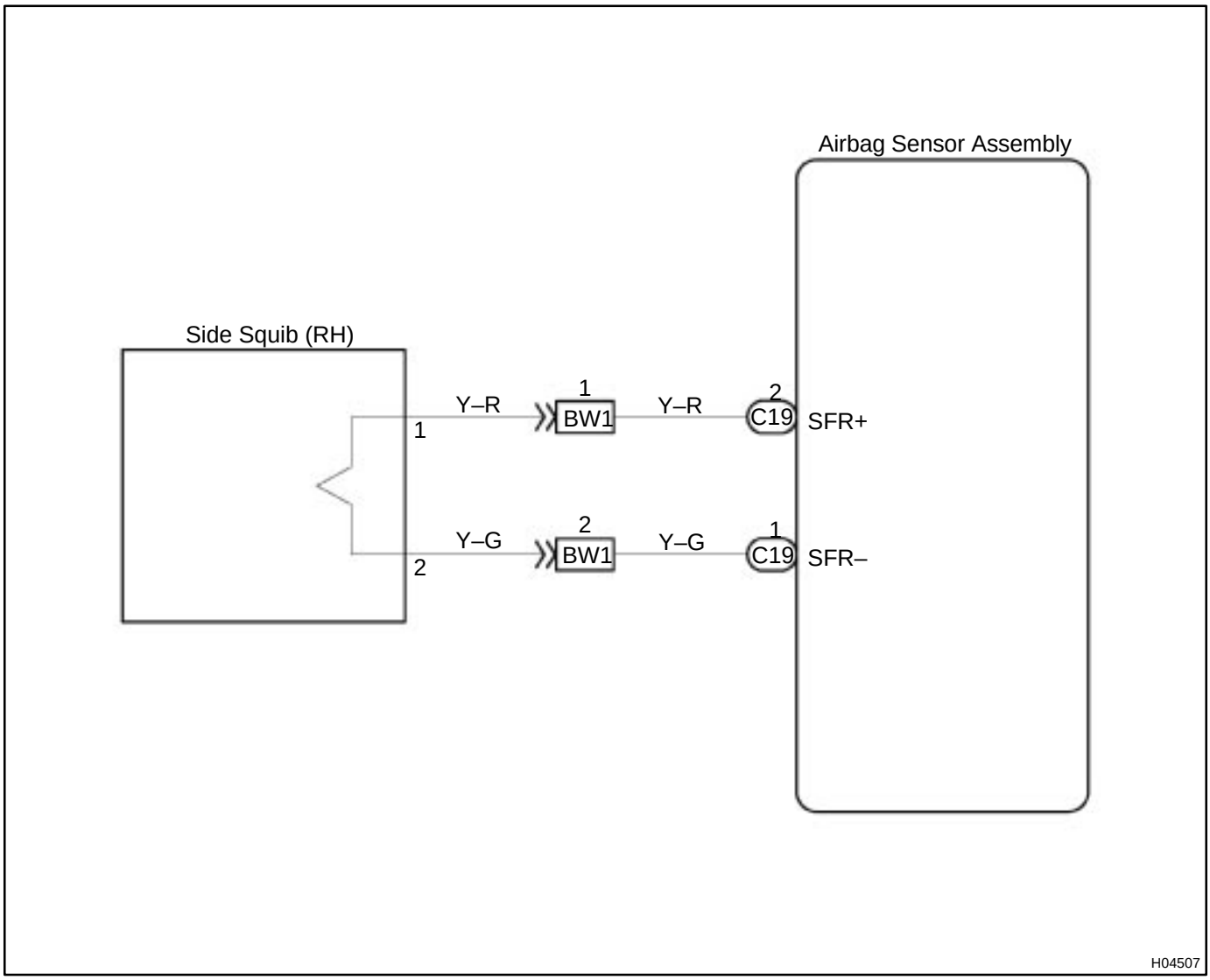

INSPECTION PROCEDURE

1	**Prepare for inspection. (See step 1 on page DI–787)**

2	**Check side squib (RH) circuit.**

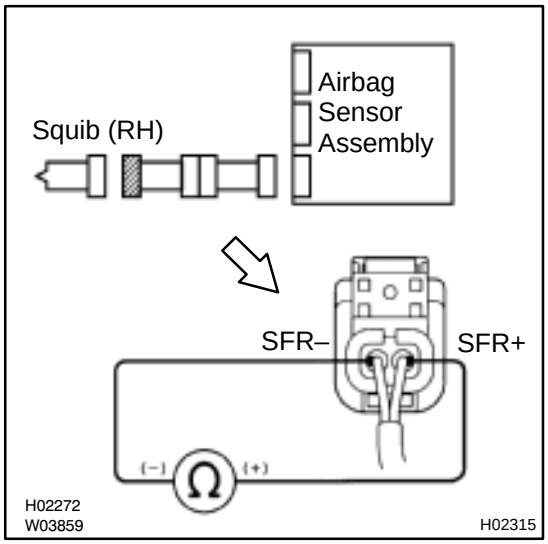

PREPARATION:

Release airbag activation prevention mechanism of the connector (on the airbag sensor assembly side) between the airbag sensor assembly and the side airbag assembly (RH).
(See page DI–626)

CHECK:

For the connector (on the side airbag assembly side) between the side airbag assembly (RH) and the airbag sensor assembly, measure the resistance between SFR+ and SFR–.

OK:

Resistance: 1 MΩ or Higher

NG	**Go to step 5.**

OK

3	Check airbag sensor assembly.

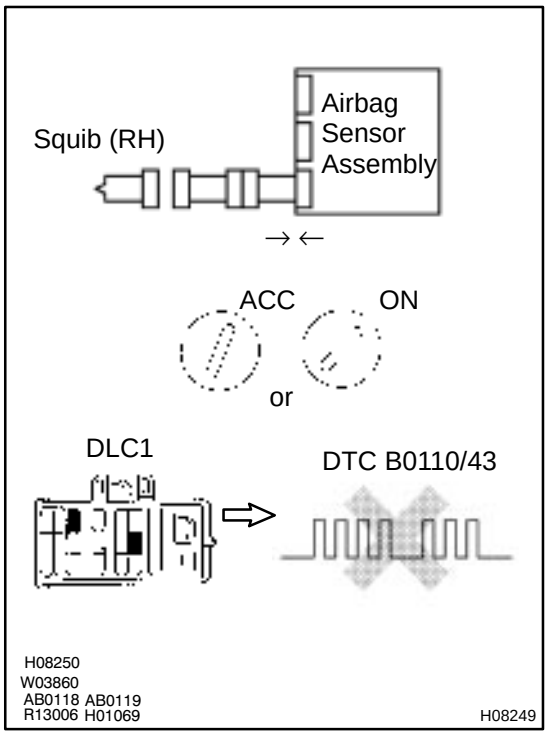

PREPARATION:

(a) Connect the connector to the airbag sensor assembly.
(b) Connect negative (–) terminal cable to the battery, and wait at least for 2 seconds.

CHECK:

(a) Turn ignition switch to ACC or ON and wait at least for 20 seconds.
(b) Clear DTC stored in memory.
(See page DI–626)
(c) Turn ignition switch to LOCK, and wait at least for 20 seconds.
(d) Turn ignition switch to ACC or ON, and wait at least for 20 seconds.
(e) Check DTC.
(See page DI–626)

OK:

DTC B0110/43 is not output.

HINT:
Codes other than code B0110/43 may be output at this time, but they are not relevant to this check.

NG → **Replace airbag sensor assembly.**

OK

4	Check side squib (RH).

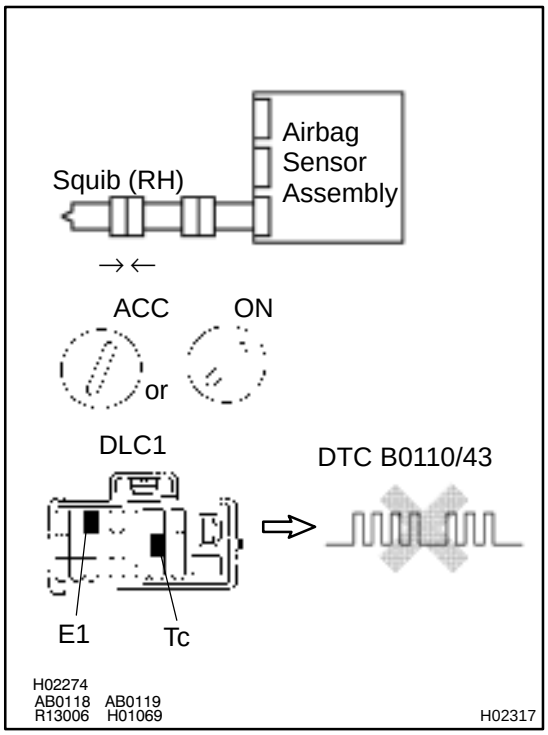

PREPARATION:

(a) Turn ignition switch to LOCK.
(b) Disconnect negative (–) terminal cable from the battery, and wait at least for 90 seconds.
(c) Connect the side airbag assembly (RH) connector.
(d) Connect negative (–) terminal cable to the battery, and wait at least for 2 seconds.

CHECK:

(a) Turn ignition switch to LOOK, and wait at least for 20 second.
(b) Turn ignition switch to ACC or ON, and wait at least for 20 seconds.
(c) Clear DTC stored in memory.
(See page DI–626)
(d) Turn ignition switch to LOCK, and wait at least for 20 seconds.
(e) Turn ignition switch to ACC or ON, and wait at least for 20 seconds.
(f) Check DTC.
(See page DI–626)

OK:

DTC B0110/43 is not output.

HINT:
Codes other than code B0110/43 may be output at this time, but they are not relevant to this check.

NG → **Replace side airbag assembly (RH).**

OK →

For the results of the above inspection, the malfunctioning part can now be considered normal. To make sure of this, use the simulation method to check.

5	Check sub wire harness.

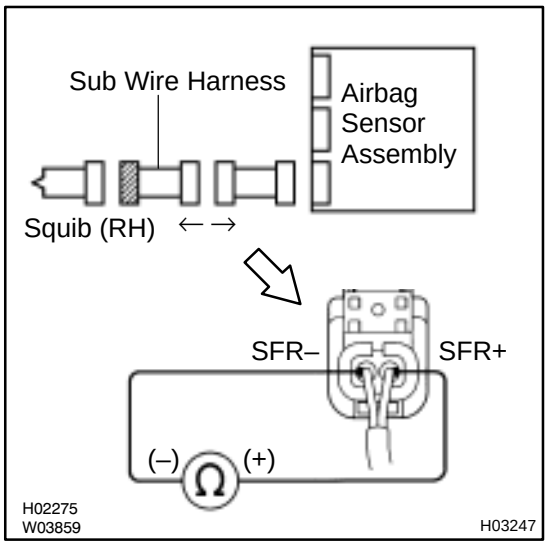

PREPARATION:

(a) Disconnect sub wire harness connector on the airbag sensor assembly side.

(b) Release the airbag activation prevention mechanism of the sub wire harness connector on the airbag sensor assembly side. (See page DI–626)

CHECK:

For the connector (on the sub wire harness side) between the side airbag assembly and the sub wire harness, measure the resistance between SFR+ and SFR–.

OK:

Resistance: 1 MΩ or Higher

NG → **Repair or replace sub wire harness.**

OK

6	Check harness between airbag sensor assembly and sub wire harness.

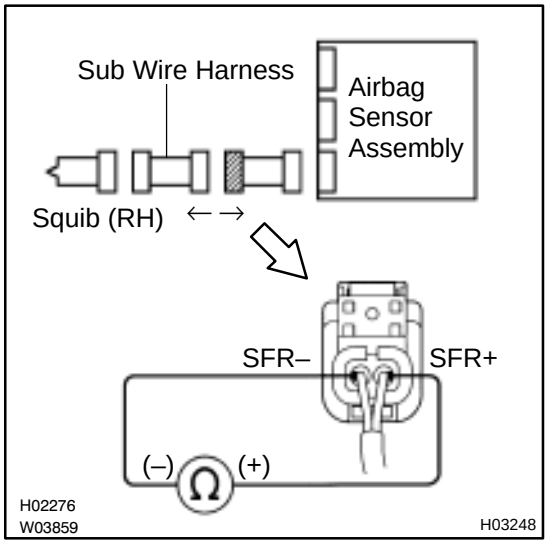

PREPARATION:

Release the airbag activation prevention mechanism of the airbag sensor assembly connector. (See page DI–626)

CHECK:

For the connector (on the sub wire harness side) between the airbag sensor assembly and sub wire harness, measure the resistance between SFR+ and SFR–.

OK:

Resistance: 1 MΩ or Higher

NG → **Repair or replace harness or connector between airbag sensor assembly and sub wire harness.**

OK

For the results of the above inspection, the malfunctioning part can now be considered normal. To make sure of this, use the simulation method to check.

DTC	B0111/44	Open in Side Squib (RH) Circuit (TMC Made)

CIRCUIT DESCRIPTION

The side squib circuit consists of the airbag sensor assembly and side airbag assembly (RH).
It causes the SRS to deploy when the SRS deployment conditions are satisfied.
For details of the function of each component, see OPERATION on page RS–2.
DTC B0111/44 is recorded when an open is detected in the side squib (RH) circuit.

DTC No.	DTC Detecting Condition	Trouble Area
B0111/44	●Open circuit in SFR+ wire harness or SFR– wire harness of squib ●Side squib (RH) malfunction ●Airbag sensor assembly malfunction	●Side airbag assembly (RH) ●Airbag sensor assembly ●Wire harness

WIRING DIAGRAM

See page DI–670.

INSPECTION PROCEDURE

1	**Prepare for inspection. (See step 1 on page DI–787)**

2	**Check side squib (RH) circuit.**

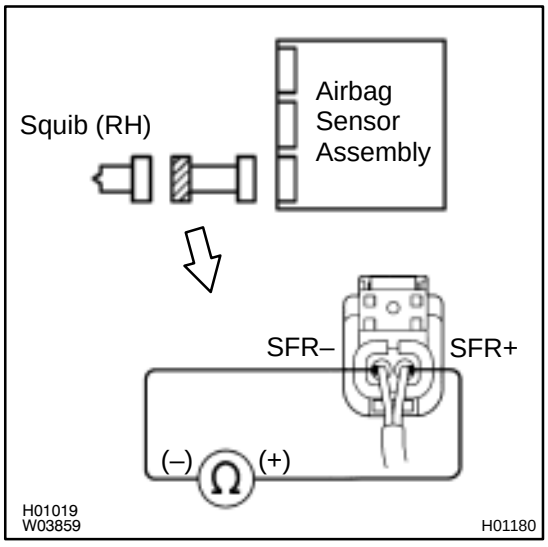

CHECK:
For the connector (on the side airbag assembly side) between the side airbag assembly (RH) and the airbag sensor assembly, measure the resistance between SFR+ and SFR–.

OK:

Resistance: Below 1 Ω

NG → **Repair or replace harness or connector between side airbag assembly (RH) and airbag sensor assembly.**

OK

3	Check airbag sensor assembly.

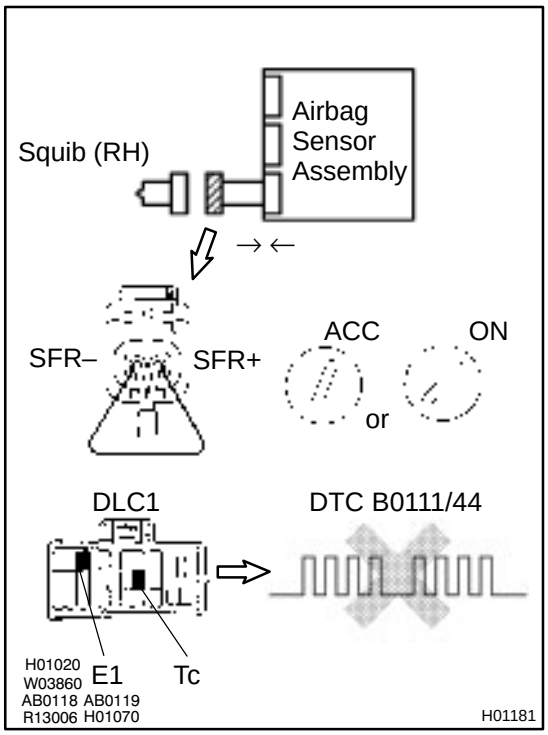

PREPARATION:

(a) Connect the connector to the airbag sensor assembly.

(b) Using a service wire, connect SFR+ and SFR– of the connector (on the side airbag assembly side) between the side airbag assembly (RH) and the airbag sensor assembly.

(c) Connect negative (–) terminal cable to the battery, and wait at least for 2 seconds.

CHECK:

(a) Turn ignition switch to ACC or ON and wait at least for 20 seconds.

(b) Clear DTC stored in memory.
(See page DI–626)

(c) Turn ignition switch to LOCK, and wait at least for 20 seconds.

(d) Turn ignition switch to ACC or ON, and wait at least for 20 seconds.

(e) Check DTC.
(See page DI–626)

OK:

DTC B0111/44 is not output.

HINT:

Codes other than code B0111/44 may be output at this time, but they are not relevant to this check.

NG	Replace airbag sensor assembly.

OK

4	Check side squib (RH).

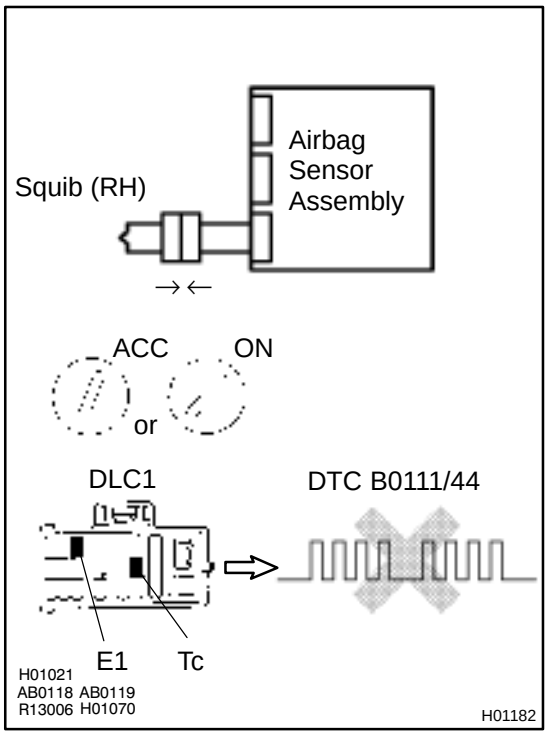

PREPARATION:

(a) Turn ignition switch to LOCK.
(b) Disconnect negative (–) terminal cable from the battery, and wait at least for 90 seconds.
(c) Connect the side airbag assembly (RH) connector.
(d) Connect negative (–) terminal cable to the battery, and wait at least for 2 seconds.

CHECK:

(a) Turn ignition switch to ACC or ON, and wait at least for 20 seconds.
(b) Clear DTC stored in memory.
(See page DI–626)
(c) Turn ignition switch to LOCK, and wait at least for 20 seconds.
(d) Turn ignition switch to ACC or ON, and wait at least for 20 seconds.
(e) Check DTC.
(See page DI–626)

OK:

DTC B0111/44 is not output.

HINT:
Codes other than code B0111/44 may be output at this time, but they are not relevant to this check.

NG → **Replace side airbag assembly (RH).**

OK

From the results of the above inspection, the malfunctioning part can now be considered normal. To make sure of this, use the simulation method to check.

DI1L0–02

DTC	B0111/44	Open in Side Squib (RH) Circuit (TMMK Made)

CIRCUIT DESCRIPTION

The side squib circuit consists of the airbag sensor assembly and side airbag assembly (RH).
It causes the SRS to deploy when the SRS deployment conditions are satisfied.
For details of the function of each component, see OPERATION on page RS–2.
DTC B0111/44 is recorded when an open is detected in the side squib (RH) circuit.

DTC No.	DTC Detecting Condition	Trouble Area
B0111/44	●Open circuit in SFR+ wire harness or SFR– wire harness of squib ●Side squib (RH) malfunction ●Airbag sensor assembly malfunction	●Side airbag assembly (RH) ●Airbag sensor assembly ●Wire harness ●Sub wire harness

WIRING DIAGRAM

See page DI–674.

INSPECTION PROCEDURE

1	**Prepare for inspection. (See step 1 on page DI–787)**

2	**Check side squib (RH) circuit.**

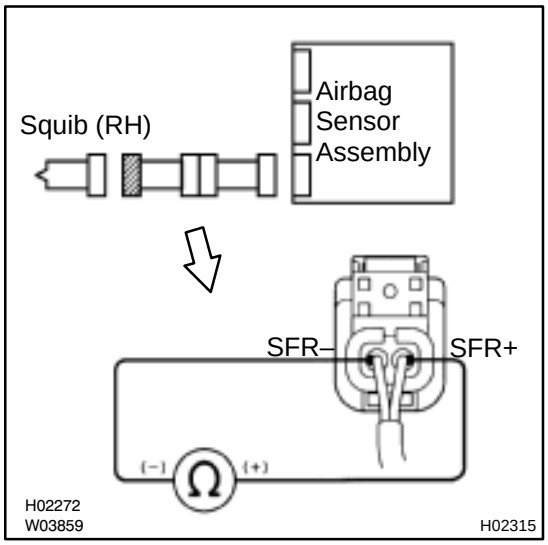

CHECK:
For the connector (on the side airbag assembly side) between the side airbag assembly (RH) and the airbag sensor assembly, measure the resistance between SFR+ and SFR–.
OK:
Resistance: Below 1 Ω

NG → **Go to step 5.**

OK

3	Check airbag sensor assembly.

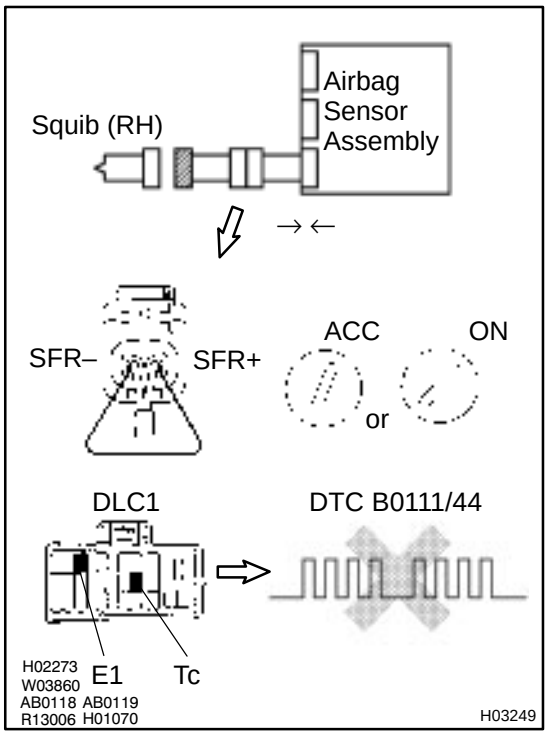

PREPARATION:

(a) Connect the connector to the airbag sensor assembly.

(b) Using a service wire, connect SFR+ and SFR– of the connector (on the side airbag assembly side) between the side airbag assembly (RH) and the airbag sensor assembly.

(c) Connect negative (–) terminal cable to the battery, and wait at least for 2 seconds.

CHECK:

(a) Turn ignition switch to ACC or ON and wait at least for 20 seconds.

(b) Clear DTC stored in memory.
(See page DI–626)

(c) Turn ignition switch to LOCK, and wait at least for 20 seconds.

(d) Turn ignition switch to ACC or ON, and wait at least for 20 seconds.

(e) Check DTC.
(See page DI–626)

OK:

DTC B0111/44 is not output.

HINT:

Codes other than code B0111/44 may be output at this time, but they are not relevant to this check.

NG	Replace airbag sensor assembly.

OK

4	Check side squib (RH).

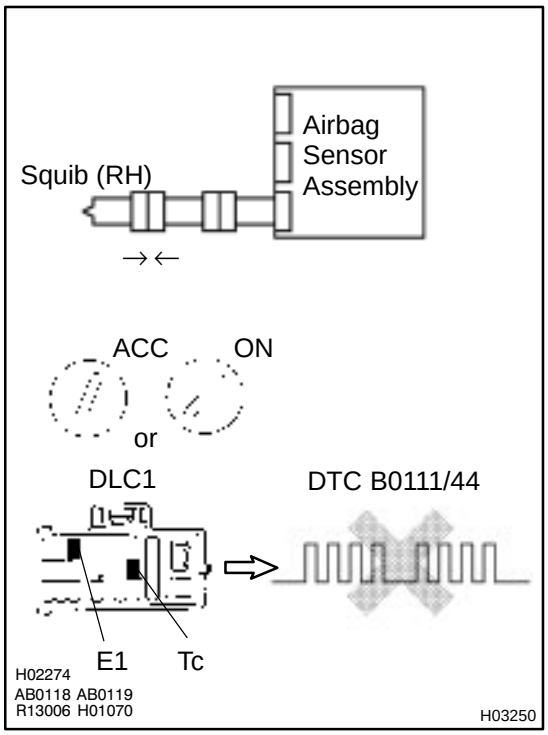

PREPARATION:

(a) Turn ignition switch to LOCK.
(b) Disconnect negative (–) terminal cable from the battery, and wait at least for 90 seconds.
(c) Connect the side airbag assembly (RH) connector.
(d) Connect negative (–) terminal cable to the battery, and wait at least for 2 seconds.

CHECK:

(a) Turn ignition switch to ACC or ON, and wait at least for 20 seconds.
(b) Clear DTC stored in memory.
(See page DI–626)
(c) Turn ignition switch to LOCK, and wait at least for 20 seconds.
(d) Turn ignition switch to ACC or ON, and wait at least for 20 seconds.
(e) Check DTC.
(See page DI–626)

OK:

DTC B0111/44 is not output.

HINT:
Codes other than code B0111/44 may be output at this time, but they are not relevant to this check.

NG → **Replace side airbag assembly (RH).**

OK

From the results of the above inspection, the malfunctioning part can now be considered normal. To make sure of this, use the simulation method to check.

5	Check sub wire harness.

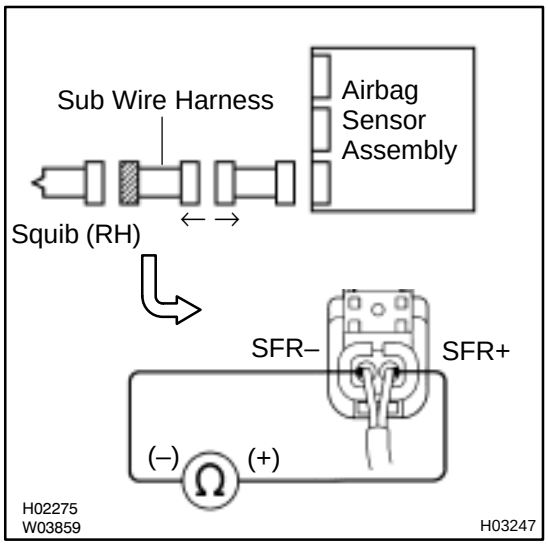

PREPARATION:
Disconnect the sub wire harness connector on the airbag sensor assembly side.

CHECK:
For the connector (on the sub wire harness side) between the side airbag assembly and the sub wire harness, measure the resistance between SFR+ and SFR–.

OK:

Resistance: Below 1 Ω

NG → **Repair or replace sub wire harness.**

OK

6	Check harness between airbag sensor assembly and sub wire harness.

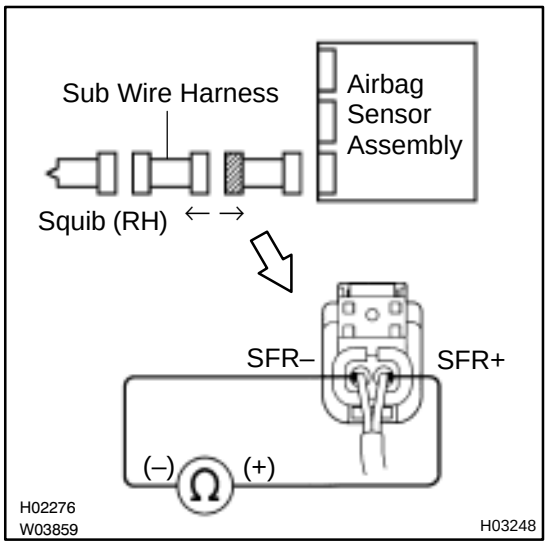

CHECK:
For the connector (on the airbag sensor assembly side) between the airbag sensor assembly and the sub wire harness, measure the resistance SFR+ and SFR–.

OK:

Resistance: Below 1 Ω

NG → **Repair or replace harness or connector between airbag sensor assembly and sub wire harness.**

OK

From the results of the above inspection, the malfunctioning part can now be considered normal. To make sure of this, use the simulation method to check.

DTC	B0112/41	Short in Side Squib (RH) Circuit (to Ground) (TMC Made)

CIRCUIT DESCRIPTION

The side squib circuit consists of the airbag sensor assembly and side airbag assembly (RH).
It causes the SRS to deploy when the SRS deployment conditions are satisfied.
For details of the function of each component, see OPERATION on page RS–2.
DTC B0112/41 is recorded when ground short is detected in the side squib (RH) circuit.

DTC No.	DTC Detecting Condition	Trouble Area
B0112/41	●Short circuit in side squib (RH) wire harness (to ground) ●Side squib (RH) malfunction ●Airbag sensor assembly malfunction	●Side airbag assembly (RH) ●Airbag sensor assembly ●Wire harness

WIRING DIAGRAM

See page DI–670.

INSPECTION PROCEDURE

1	Prepare for inspection. (See step 1 on page DI–787)

2	Check side squib (RH) circuit.

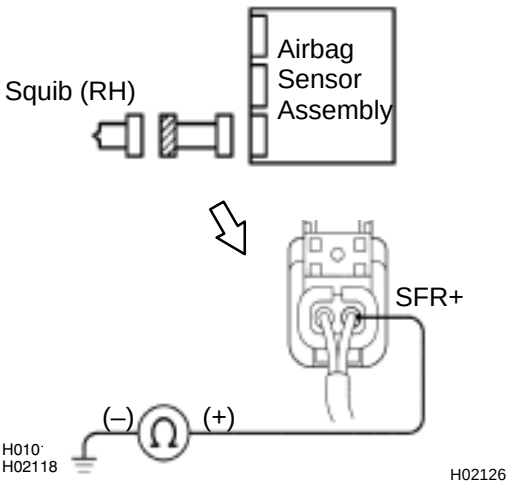

CHECK:

For the connector (on the side airbag assembly side) between the side airbag assembly (RH) and the airbag sensor assembly, measure the resistance between SFR+ and body ground.

OK:

Resistance: 1 MΩ or Higher

NG → **Repair or replace harness or connector between side airbag assembly (RH) and airbag sensor assembly.**

OK

3	Check airbag sensor assembly.

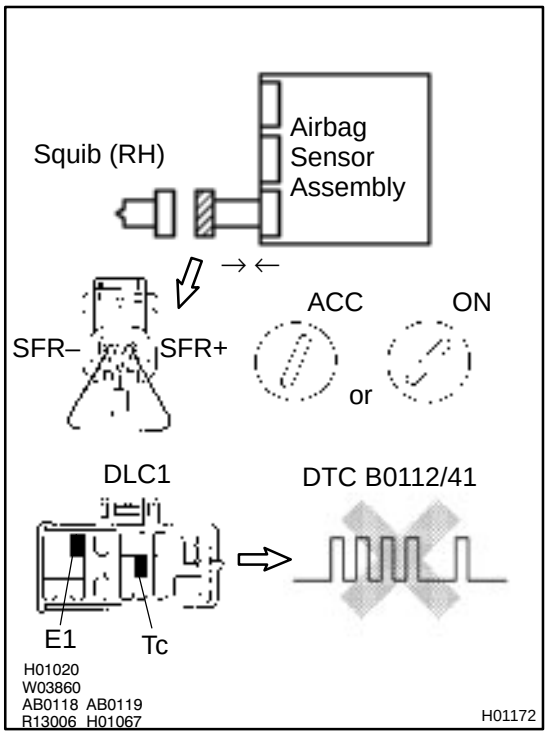

PREPARATION:

(a) Connect the connector to the airbag sensor assembly.

(b) Using a service wire, connect SFR+ and SFR– of the connector (on the side airbag assembly side) between the side airbag assembly (RH) and the airbag sensor assembly.

(c) Connect negative (–) terminal cable to the battery, and wait at least for 2 seconds.

CHECK:

(a) Turn ignition switch to ACC or ON and wait at least for 20 seconds.

(b) Clear DTC stored in memory.
(See step 5 on page DI–626)

(c) Turn ignition switch to LOCK, and wait at least for 20 seconds.

(d) Turn ignition switch to ACC or ON, and wait at least for 20 seconds.

(e) Check DTC.
(See page DI–626)

OK:

DTC B0112/41 is not output.

HINT:

Codes other than code B0112/41 may be output at this time, but they are not relevant to this check.

NG	Replace airbag sensor assembly.

OK

4	Check side squib (RH).

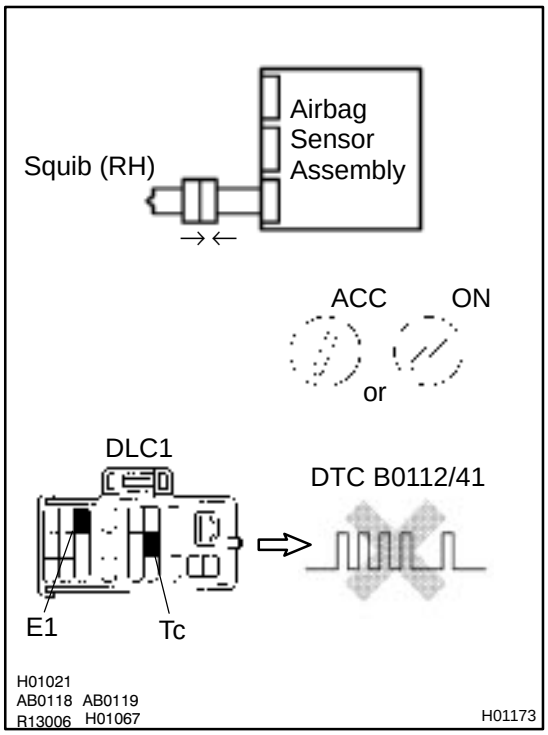

PREPARATION:

(a) Turn ignition switch to LOCK.
(b) Disconnect negative (–) terminal cable from the battery, and wait at least for 90 seconds.
(c) Connect the side airbag assembly (RH) connector.
(d) Connect negative (–) terminal cable to the battery, and wait at least for 2 seconds.

CHECK:

(a) Turn ignition switch to ACC or ON, and wait at least for 20 seconds.
(b) Clear DTC stored in memory.
(See step 5 on page DI–626)
(c) Turn ignition switch to LOCK, and wait at least for 20 seconds.
(d) Turn ignition switch to ACC or ON, and wait at least for 20 seconds.
(e) Check DTC.
(See page DI–626)

OK:

DTC B0112/41 is not output.

HINT:
Codes other than code B0112/41 may be output at this time, but they are not relevant to this check.

NG → **Replace side airbag assembly (RH).**

OK

From the results of the above inspection, the malfunctioning part can now be considered normal. To make sure of this, use the simulation method to check. If the malfunctioning part can not be detected by the simulation method, replace all SRS components including the wire harness.

DI4L4–01

DTC	B0112/41	Short in Side Squib (RH) Circuit (to Ground) (TMMK Made)

CIRCUIT DESCRIPTION

The side squib circuit consists of the airbag sensor assembly and side airbag assembly (RH).
It causes the SRS to deploy when the SRS deployment conditions are satisfied.
For details of the function of each component, see OPERATION on page RS–2.
DTC B0112/41 is recorded when ground short is detected in the side squib (RH) circuit.

DTC No.	DTC Detecting Condition	Trouble Area
B0112/41	●Short circuit in side squib (RH) wire harness (to ground) ●Side squib (RH) malfunction ●Airbag sensor assembly malfunction	●Side airbag assembly (RH) ●Airbag sensor assembly ●Wire harness ●Sub wire harness

WIRING DIAGRAM

See page DI–674.

INSPECTION PROCEDURE

1	**Prepare for inspection. (See step 1 on page DI–787)**

2	**Check side squib (RH) circuit.**

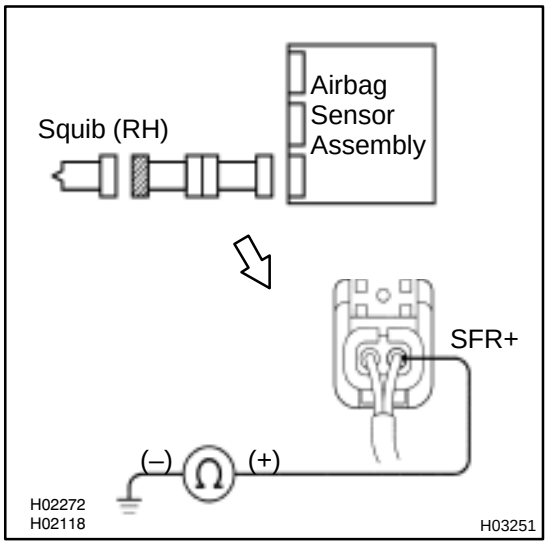

CHECK:
For the connector (on the side airbag assembly side) between the side airbag assembly (RH) and the airbag sensor assembly, measure the resistance between SFR+ and body ground.
OK:
Resistance: 1 MΩ or Higher

NG → **Go to step 5.**

OK

3	Check airbag sensor assembly.

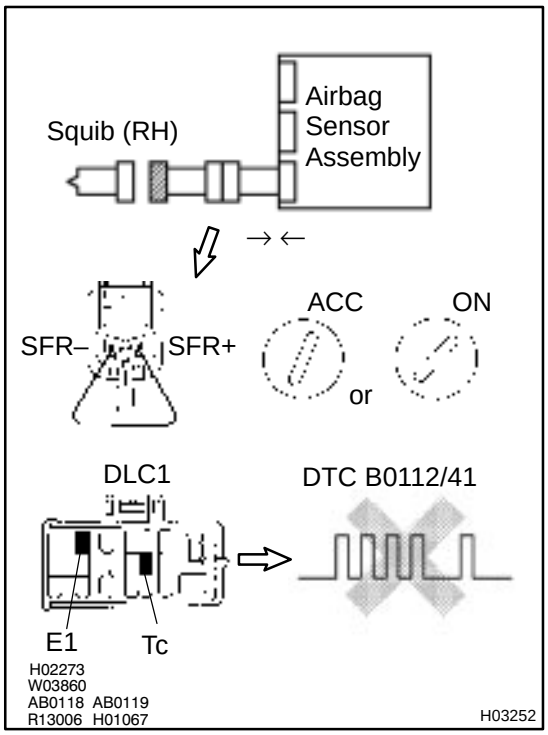

PREPARATION:

(a) Connect the connector to the airbag sensor assembly.

(b) Using a service wire, connect SFR+ and SFR– of the connector (on the side airbag assembly side) between the side airbag assembly (RH) and the airbag sensor assembly.

(c) Connect negative (–) terminal cable to the battery, and wait at least for 2 seconds.

CHECK:

(a) Turn ignition switch to ACC or ON and wait at least for 20 seconds.

(b) Clear DTC stored in memory.
(See step 5 on page DI–626)

(c) Turn ignition switch to LOCK, and wait at least for 20 seconds.

(d) Turn ignition switch to ACC or ON, and wait at least for 20 seconds.

(e) Check DTC.
(See page DI–626)

OK:

DTC B0112/41 is not output.

HINT:

Codes other than code B0112/41 may be output at this time, but they are not relevant to this check.

NG	Replace airbag sensor assembly.

OK

4	Check side squib (RH).

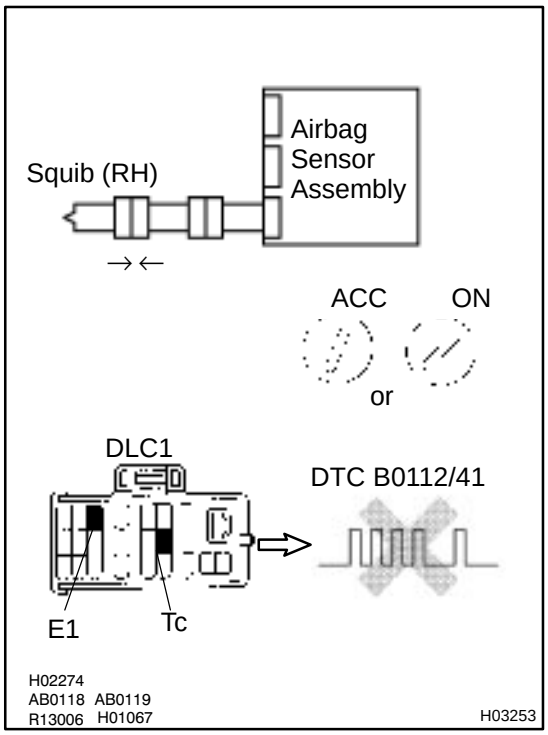

PREPARATION:

(a) Turn ignition switch to LOCK.
(b) Disconnect negative (–) terminal cable from the battery, and wait at least for 90 seconds.
(c) Connect the side airbag assembly (RH) connector.
(d) Connect negative (–) terminal cable to the battery, and wait at least for 2 seconds.

CHECK:

(a) Turn ignition switch to ACC or ON, and wait at least for 20 seconds.
(b) Clear DTC stored in memory.
(See step 5 on page DI–626)
(c) Turn ignition switch to LOCK, and wait at least for 20 seconds.
(d) Turn ignition switch to ACC or ON, and wait at least for 20 seconds.
(e) Check DTC.
(See page DI–626)

OK:

DTC B0112/41 is not output.

HINT:
Codes other than code B0112/41 may be output at this time, but they are not relevant to this check.

NG → **Replace side airbag assembly (RH).**

OK

From the results of the above inspection, the malfunctioning part can now be considered normal. To make sure of this, use the simulation method to check. If the malfunctioning part can not be detected by the simulation method, replace all SRS components including the wire harness.

5	Check sub wire harness.

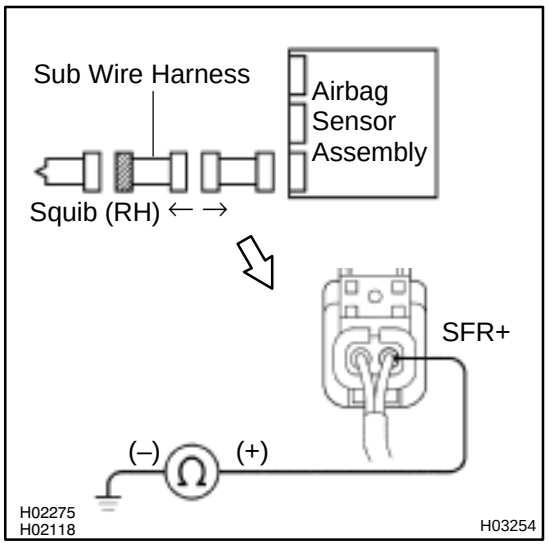

PREPARATION:
Disconnect the sub wire harness connector on the airbag sensor assembly side.

CHECK:
For the connector (on the sub wire harness side) between the side airbag assembly and the sub wire harness, measure the resistance between SFR+ and body ground.

OK:

Resistance: 1MΩ or Higher

NG → **Repair or replace sub wire harness.**

OK

6	Check harness between airbag sensor assembly and sub wire harness.

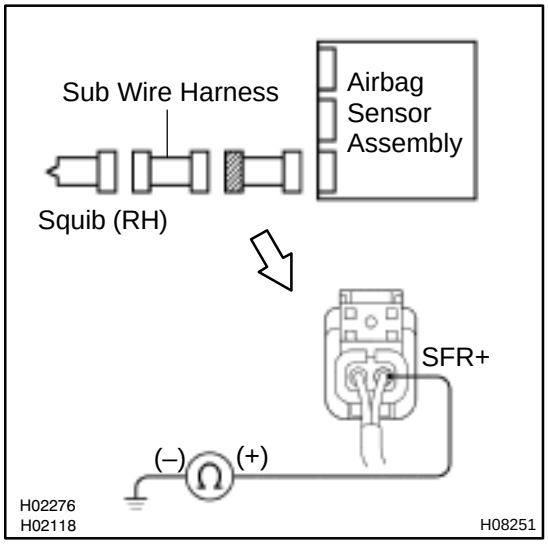

CHECK:
For the connector (on the sub wire harness side) between the sub wire harness and the airbag sensor assembly, measure the resistance between SFR+ and body ground.

OK:

Resistance: 1MΩ or Higher

NG → **Repair or replace harness or connector between airbag sensor assembly and sub wire harness.**

OK

From the results of the above inspection, the malfunctioning part can now be considered normal. To make sure of this, use the simulation method to check. If the malfunctioning part can not be detected by the simulation method, replace all SRS components including the wire harness.

DTC	B0113/42	Short in Side Squib (RH) Circuit (to B+) (TMC Made)

CIRCUIT DESCRIPTION

The side squib circuit consists of the airbag sensor assembly and side airbag assembly (RH).
It causes the SRS to deploy when the SRS deployment conditions are satisfied.
For details of the function of each component, see OPERATION on page RS–2.
DTC B0113/42 is recorded when a B+ short is detected in the side squib (RH) circuit.

DTC No.	DTC Detecting Condition	Trouble Area
B0113/42	●Short circuit in side squib (RH) wire harness (to B+) ●Side squib (RH) malfunction ●Airbag sensor assembly malfunction	●Side airbag assembly (RH) ●Airbag sensor assembly ●Wire harness

WIRING DIAGRAM

See page DI–670.

INSPECTION PROCEDURE

1	**Prepare for inspection. (See step 1 on page DI–626)**

2	**Check side squib (RH) circuit.**

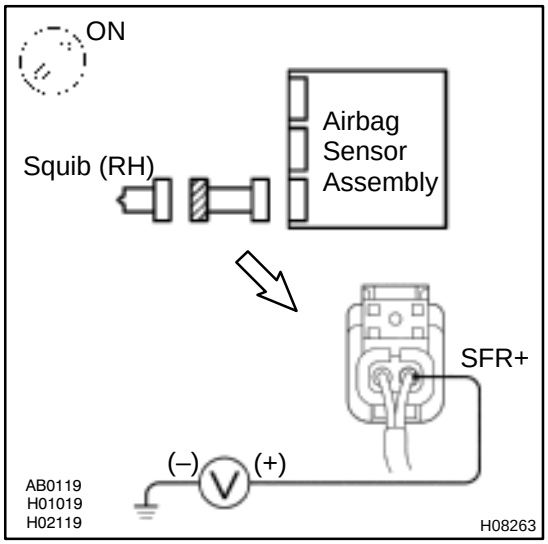

CHECK:

(a) Turn ignition switch to ON.

(b) For the connector (on the airbag sensor assembly side) between the side airbag assembly (RH) and the airbag sensor assembly, measure the voltage between SFR+ and body ground.

OK:

Voltage: 0 V

NG → **Repair or replace harness or connector between side airbag assembly (RH) and airbag sensor assembly.**

OK

3	Check airbag sensor assembly.

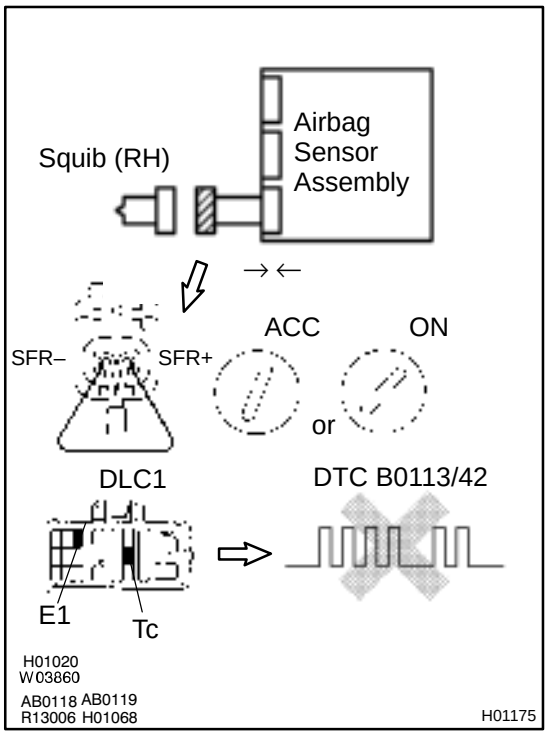

PREPARATION:

(a) Connect the connector to the airbag sensor assembly.

(b) Using a service wire, connect SFR+ and SFR– of the connector (on the side airbag assembly side) between the side airbag assembly (RH) and the airbag sensor assembly.

(c) Connect negative (–) terminal cable to the battery, and wait at least for 2 seconds.

CHECK:

(a) Turn ignition switch to ACC or ON and wait at least for 20 seconds.

(b) Clear DTC stored in memory.
(See step 5 on page DI–626)

(c) Turn ignition switch to LOCK, and wait at least for 20 seconds.

(d) Turn ignition switch to ACC or ON, and wait at least for 20 seconds.

(e) Check DTC.
(See page DI–626)

OK:

DTC B0113/42 is not output.

HINT:

Codes other than code B0113/42 may be output at this time, but they are not relevant to this check.

NG	Replace airbag sensor assembly.

OK

4	Check side squib (RH).

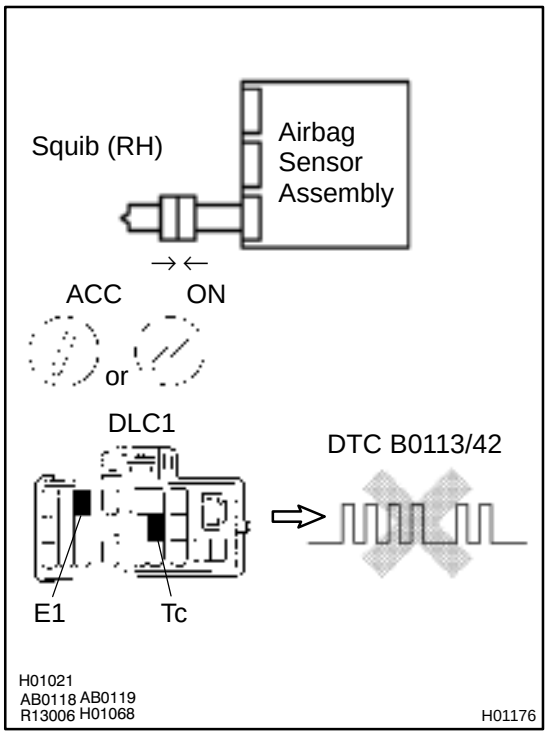

PREPARATION:

(a) Turn ignition switch to LOCK.
(b) Disconnect negative (–) terminal cable from the battery, and wait at least for 90 seconds.
(c) Connect the side airbag assembly (RH) connector.
(d) Connect negative (–) terminal cable to the battery, and wait at least for 2 seconds.

CHECK:

(a) Turn ignition switch to ACC or ON, and wait at least for 20 seconds.
(b) Clear DTC stored in memory.
(See step 5 on page DI–626)
(c) Turn ignition switch to LOCK, and wait at least for 20 seconds.
(d) Turn ignition switch to ACC or ON, and wait at least for 20 seconds.
(e) Check DTC.
(See page DI–626)

OK:

DTC B0113/42 is not output.

HINT:
Codes other than code B0113/42 may be output at this time, but they are not relevant to this check.

NG → **Replace side airbag assembly (RH).**

OK

From the results of the above inspection, the malfunctioning part can now be considered normal. To make sure of this, use the simulation method to check. If the malfunctioning part can not be detected by the simulation method, replace all SRS components including the wire harness.

DI4L5–01

DTC	B0113/42	Short in Side Squib (RH) Circuit (to B+) (TMMK Made)

CIRCUIT DESCRIPTION

The side squib circuit consists of the airbag sensor assembly and side airbag assembly (RH).
It causes the SRS to deploy when the SRS deployment conditions are satisfied.
For details of the function of each component, see OPERATION on page RS–2.
DTC B0113/42 is recorded when a B+ short is detected in the side squib (RH) circuit.

DTC No.	DTC Detecting Condition	Trouble Area
B0113/42	●Short circuit in side squib (RH) wire harness (to B+) ●Side squib (RH) malfunction ●Airbag sensor assembly malfunction	●Side airbag assembly (RH) ●Airbag sensor assembly ●Wire harness ●Sub wire harness

WIRING DIAGRAM

See page DI–674.

INSPECTION PROCEDURE

1	**Prepare for inspection. (See step 1 on page DI–787)**

2	**Check side squib (RH) circuit.**

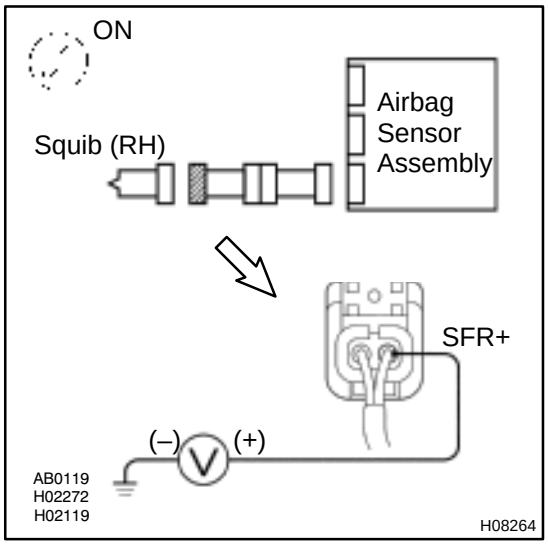

CHECK:

(a) Turn ignition switch to ON.

(b) For the connector (on the airbag sensor assembly side) between the side airbag assembly (RH) and the airbag sensor assembly, measure the voltage between the SFR+ and body ground.

OK:

Voltage: 0 V

NG	**Go to step 5.**

OK

3	Check airbag sensor assembly.

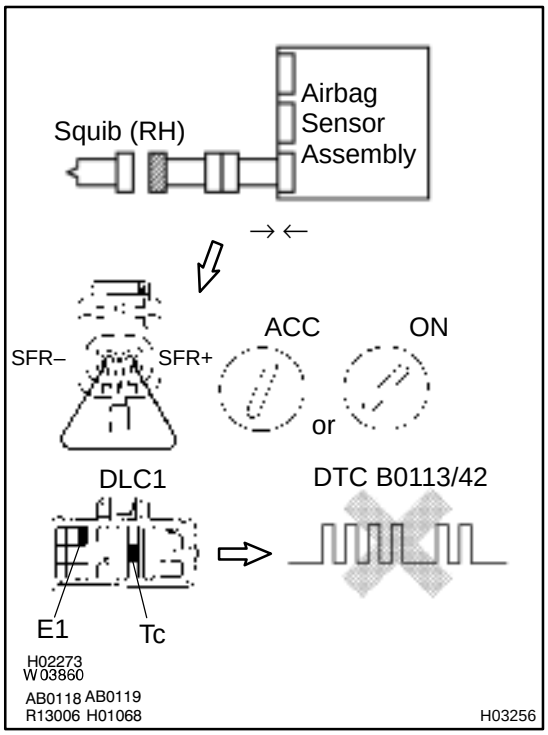

PREPARATION:

(a) Connect the connector to the airbag sensor assembly.

(b) Using a service wire, connect SFR+ and SFR– of the connector (on the side airbag assembly side) between the side airbag assembly (RH) and the airbag sensor assembly.

(c) Connect negative (–) terminal cable to the battery, and wait at least for 2 seconds.

CHECK:

(a) Turn ignition switch to ACC or ON and wait at least for 20 seconds.

(b) Clear DTC stored in memory.
(See step 5 on page DI–626)

(c) Turn ignition switch to LOCK, and wait at least for 20 seconds.

(d) Turn ignition switch to ACC or ON, and wait at least for 20 seconds.

(e) Check DTC.
(See page DI–626)

OK:

DTC B0113/42 is not output.

HINT:

Codes other than code B0113/42 may be output at this time, but they are not relevant to this check.

NG	Replace airbag sensor assembly.

OK

4	Check side squib (RH).

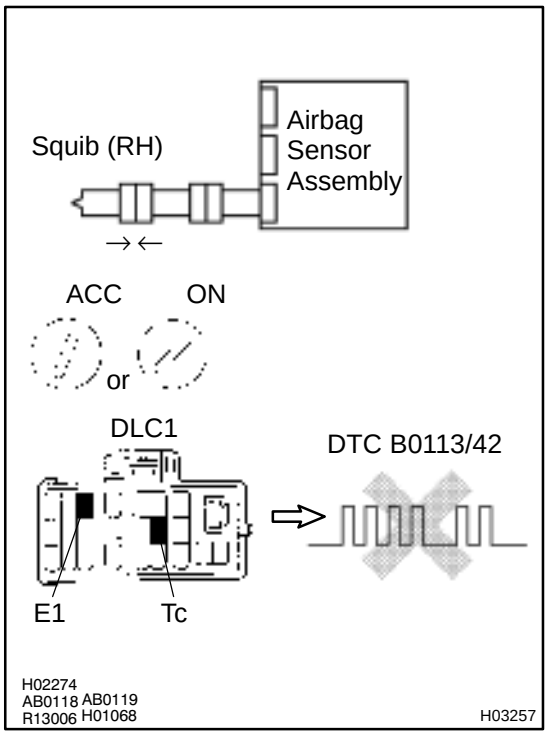

PREPARATION:

(a) Turn ignition switch to LOCK.
(b) Disconnect negative (–) terminal cable from the battery, and wait at least for 90 seconds.
(c) Connect the side airbag assembly (RH) connector.
(d) Connect negative (–) terminal cable to the battery, and wait at least for 2 seconds.

CHECK:

(a) Turn ignition switch to ACC or ON, and wait at least for 20 seconds.
(b) Clear DTC stored in memory.
(See step 5 on page DI–626)
(c) Turn ignition switch to LOCK, and wait at least for 20 seconds.
(d) Turn ignition switch to ACC or ON, and wait at least for 20 seconds.
(e) Check DTC.
(See page DI–626)

OK:

DTC B0113/42 is not output.

HINT:
Codes other than code B0113/42 may be output at this time, but they are not relevant to this check.

NG → **Replace side airbag assembly (RH).**

OK

From the results of the above inspection, the malfunctioning part can now be considered normal. To make sure of this, use the simulation method to check. If the malfunctioning part can not be detected by the simulation method, replace all SRS components including the wire harness.

5	Check sub wire harness.

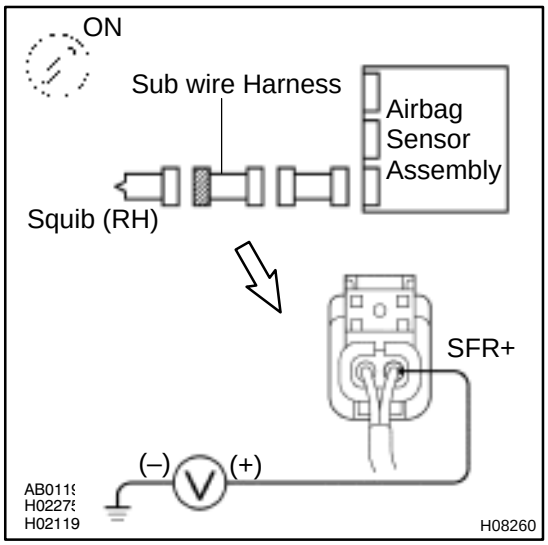

PREPARATION:
Disconnect the sub wire harness connector on the airbag sensor assembly side.

CHECK:
(a) Turn ignition switch to ON.
(b) For the connector (on the sub wire harness side) between the side airbag assembly and the sub wire harness, measure the voltage between SFR+ and body ground.

OK:
Voltage: 0 V

NG → **Repair or replace sub wire harness.**

OK

6	Check harness between airbag sensor assembly and sub wire harness.

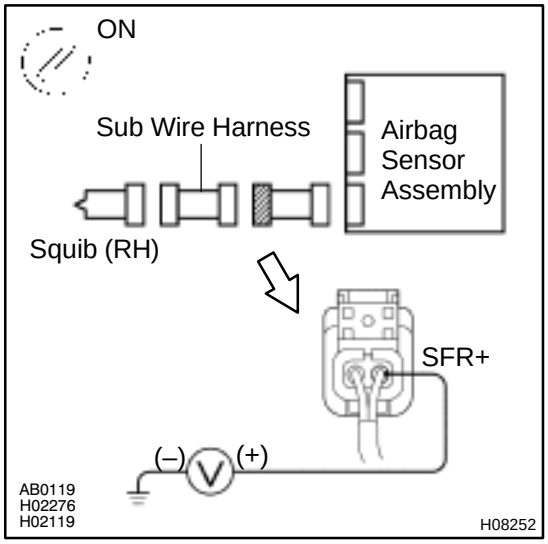

CHECK:
(a) Turn ignition switch to ON.
(b) For the connector (on the sub wire harness side) between the sub wire harness and the airbag sensor assembly, measure the voltage between SFR+ and body ground.

OK:
Voltage: 0 V

NG → **Repair or replace harness or connector between airbag sensor assembly and sub wire harness.**

OK

From the results of the above inspection, the malfunctioning part can now be considered normal. To make sure of this, use the simulation method to check. If the malfunctioning part can not be detected by the simulation method, replace all SRS components including the wire harness.

DTC	B0115/47	Short in Side Squib (LH) Circuit (TMC Made)

CIRCUIT DESCRIPTION

The side squib (LH) circuit consists of the airbag sensor assembly and side airbag assembly (LH).
It causes the SRS to deploy when the SRS deployment conditions are satisfied.
For details of the function of each component, see OPERATION on page RS–2.
DTC B0115/47 is recorded when a short is detected in the side squib (LH) circuit.

DTC No.	DTC Detecting Condition	Trouble Area
B0115/47	●Short circuit between SFL+ wire harness and SFL– wire harness of squib ●Side squib (LH) malfunction ●Airbag sensor assembly malfunction	●Side airbag assembly (LH) ●Airbag sensor assembly ●Wire harness

WIRING DIAGRAM

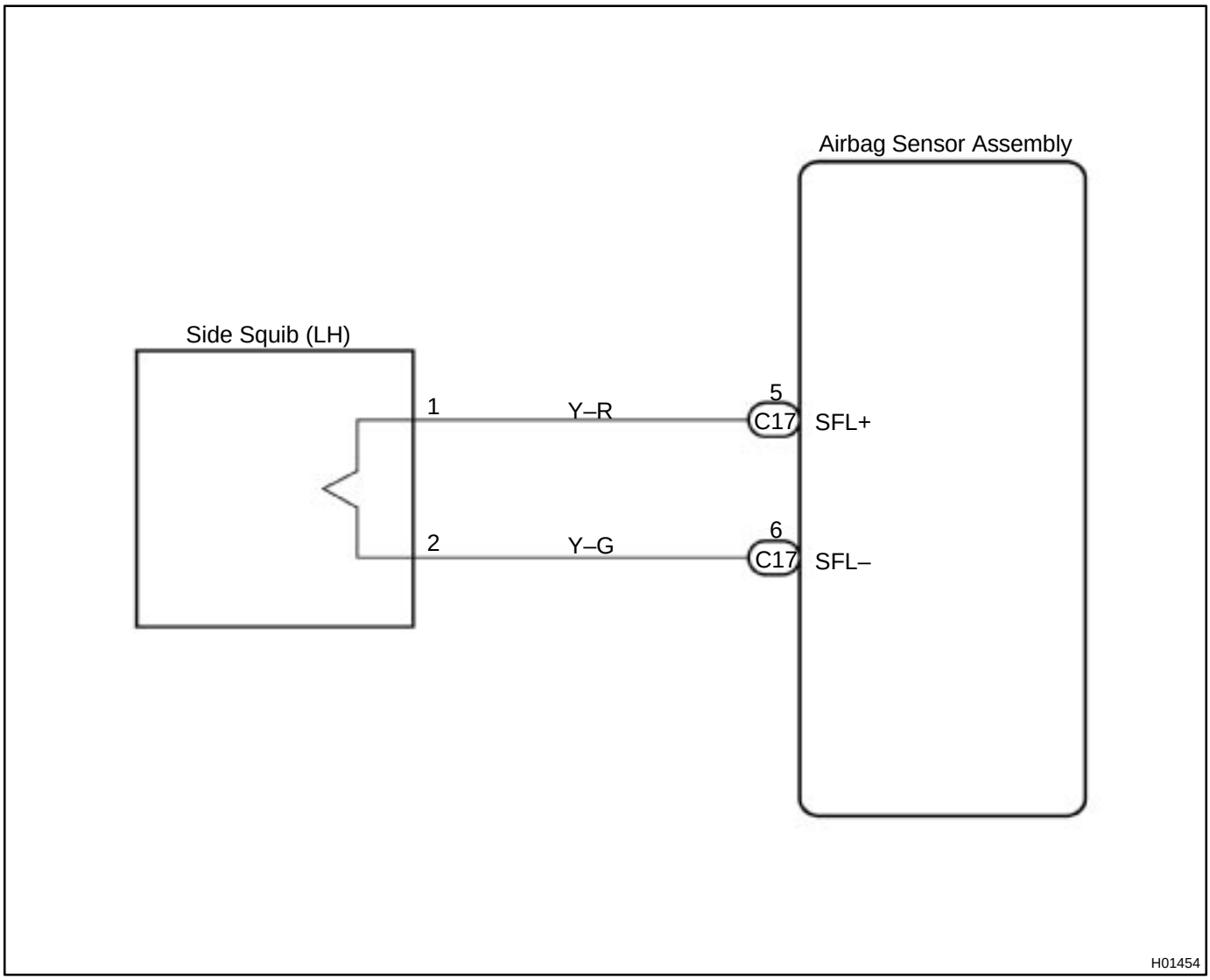

INSPECTION PROCEDURE

1	**Prepare for inspection. (See step 1 on page DI–787)**

2	**Check side squib (LH) circuit.**

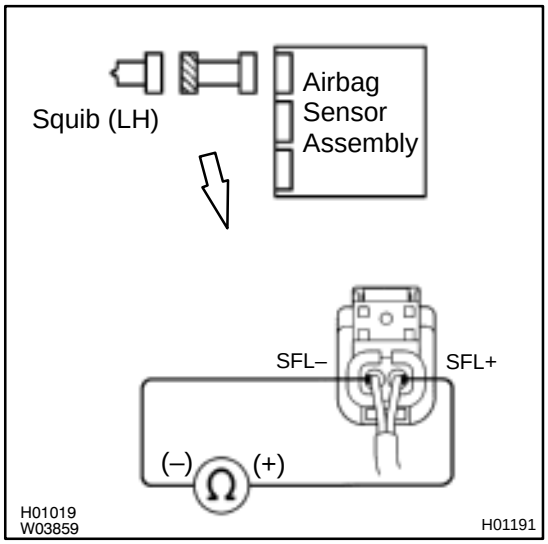

PREPARATION:

Release the airbag activation prevention mechanism of the connector (on the airbag sensor assembly side) between the airbag sensor assembly and the side airbag assembly (LH). (See page DI–626)

CHECK:

For the connector (on the side airbag assembly side) between the side airbag assembly (LH) and the airbag sensor assembly, measure the resistance between SFL+ and SFL–.

OK:

Resistance: 1 MΩ or Higher

NG → **Repair or replace harness or connector between side airbag assembly (LH) and airbag sensor assembly.**

OK

3	Check airbag sensor assembly.

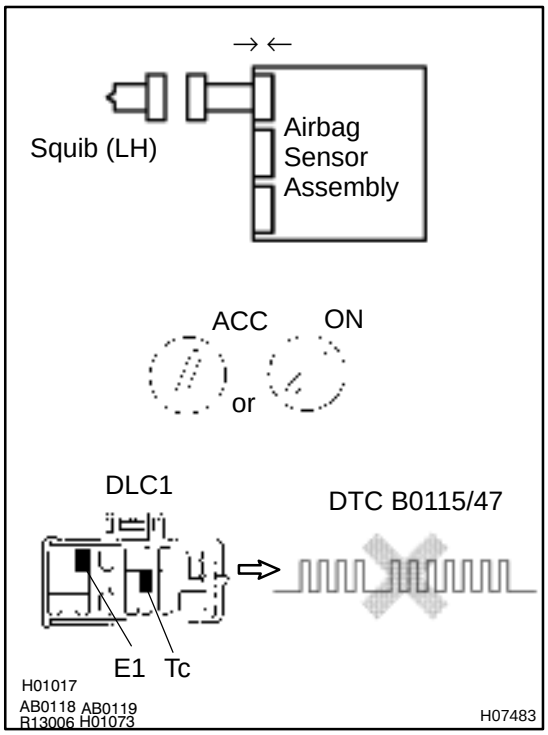

PREPARATION:

(a) Connect the connector to the airbag sensor assembly.

(b) Connect negative (–) terminal cable to the battery, and wait at least for 2 seconds.

CHECK:

(a) Turn ignition switch to ACC or ON and wait at least for 20 seconds.

(b) Clear DTC stored in memory.
(See page DI–626)

(c) Turn ignition switch to LOCK, and wait at least for 20 seconds.

(d) Turn ignition switch to ACC or ON, and wait at least for 20 seconds.

(e) Check DTC.
(See page DI–626)

OK:

DTC B0115/47 is not output.

HINT:

Codes other than code B0115/47 may be output at this time, but they are not relevant to this check.

NG → **Replace airbag sensor assembly.**

OK

4	Check side squib (LH).

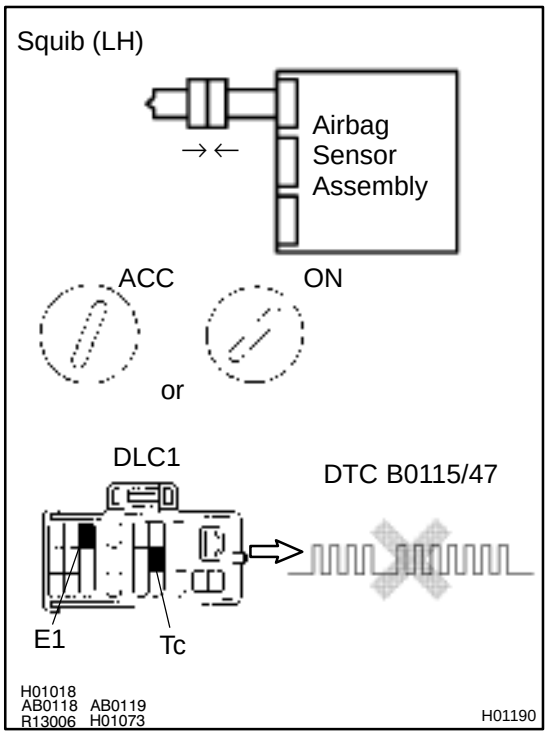

PREPARATION:

(a) Turn ignition switch to LOCK.
(b) Disconnect negative (–) terminal cable from the battery, and wait at least for 90 seconds.
(c) Connect the side airbag assembly (LH) connector.
(d) Connect negative (–) terminal cable to the battery, and wait at least for 2 seconds.

CHECK:

(a) Turn ignition switch to LOOK, and wait at least for 20 second.
(b) Turn ignition switch to ACC or ON, and wait at least for 20 seconds.
(c) Clear DTC stored in memory.
(See page DI–626)
(d) Turn ignition switch to LOCK, and wait at least for 20 seconds.
(e) Turn ignition switch to ACC or ON, and wait at least for 20 seconds.
(f) Check DTC.
(See page DI–626)

OK:

DTC B0115/47 is not output.

HINT:
Codes other than code B0115/47 may be output at this time, but they are not relevant to this check.

NG → **Replace side airbag assembly (LH).**

OK →

From the results of the above inspection, the malfunctioning part can now be considered normal. To make sure of this, use the simulation method to check.

DTC	B0115/47	Short in Side Squib (LH) Circuit (TMMK Made)

CIRCUIT DESCRIPTION

The side squib (LH) circuit consists of the airbag sensor assembly and side airbag assembly (LH).
It causes the SRS to deploy when the SRS deployment conditions are satisfied.
For details of the function of each component, see OPERATION on page RS–2.
DTC B0115/47 is recorded when a short is detected in the side squib (LH) circuit.

DTC No.	DTC Detecting Condition	Trouble Area
B0115/47	●Short circuit between SFL+ wire harness and SFL– wire harness of squib ●Side squib (LH) malfunction ●Airbag sensor assembly malfunction	●Side airbag assembly (LH) ●Airbag sensor assembly ●Wire harness ●Sub wire harness

WIRING DIAGRAM

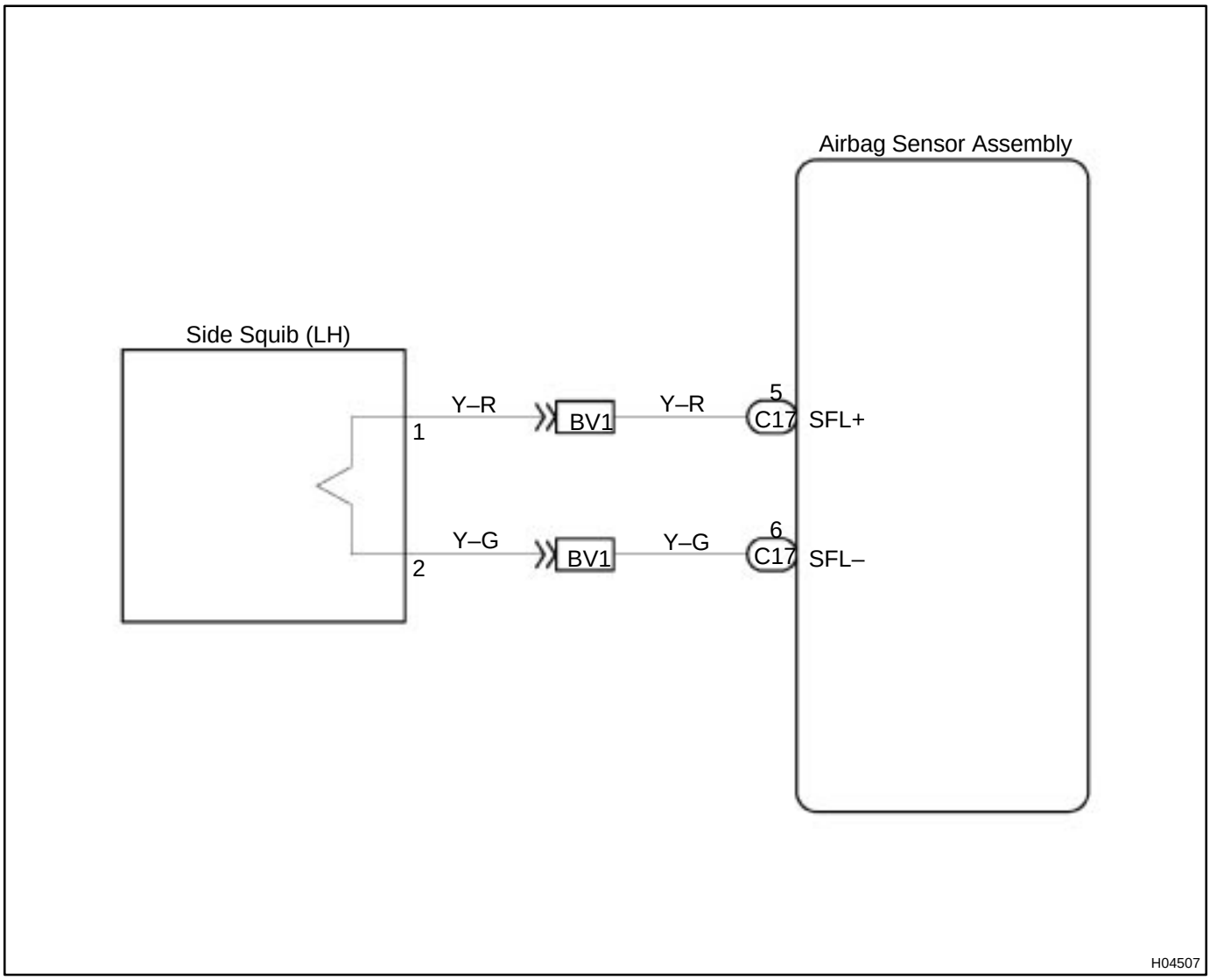

INSPECTION PROCEDURE

1	**Prepare for inspection. (See step 1 on page DI–787)**

2	**Check side squib (LH) circuit.**

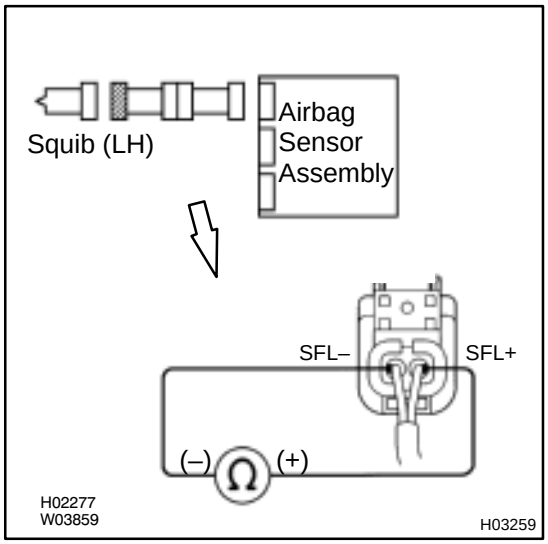

PREPARATION:

Release the airbag activation prevention mechanism of the connector (on the airbag sensor assembly side) between the airbag sensor assembly and the side airbag assembly (LH). (See page DI–626)

CHECK:

For the connector (on the side airbag assembly side) between the side airbag assembly (LH) and the airbag sensor assembly, measure the resistance between SFL+ and SFL–.

OK:

Resistance: 1 MΩ or Higher

NG	**Go to step 5.**

OK

3	Check airbag sensor assembly.

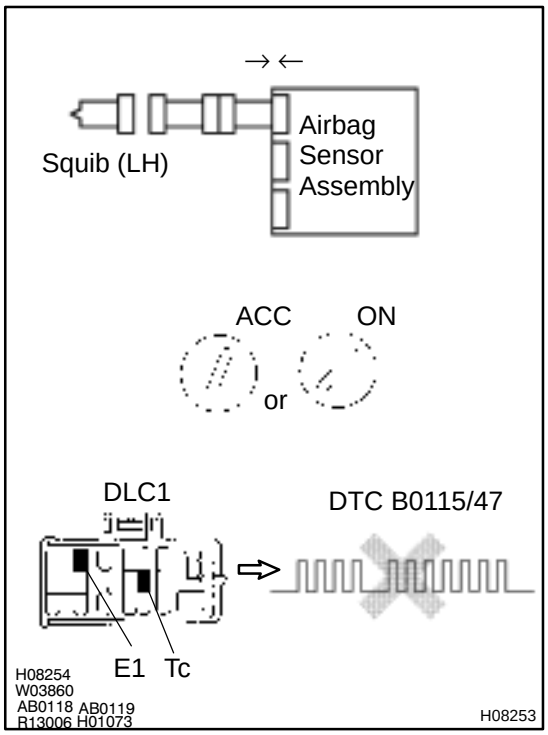

PREPARATION:

(a) Connect the connector to the airbag sensor assembly.
(b) Connect negative (–) terminal cable to the battery, and wait at least for 2 seconds.

CHECK:

(a) Turn ignition switch to ACC or ON and wait at least for 20 seconds.
(b) Clear DTC stored in memory.
(See page DI–626)
(c) Turn ignition switch to LOCK, and wait at least for 20 seconds.
(d) Turn ignition switch to ACC or ON, and wait at least for 20 seconds.
(e) Check DTC.
(See page DI–626)

OK:

DTC B0115/47 is not output.

HINT:
Codes other than code B0115/47 may be output at this time, but they are not relevant to this check.

NG → **Replace airbag sensor assembly.**

OK

4	Check side squib (LH).

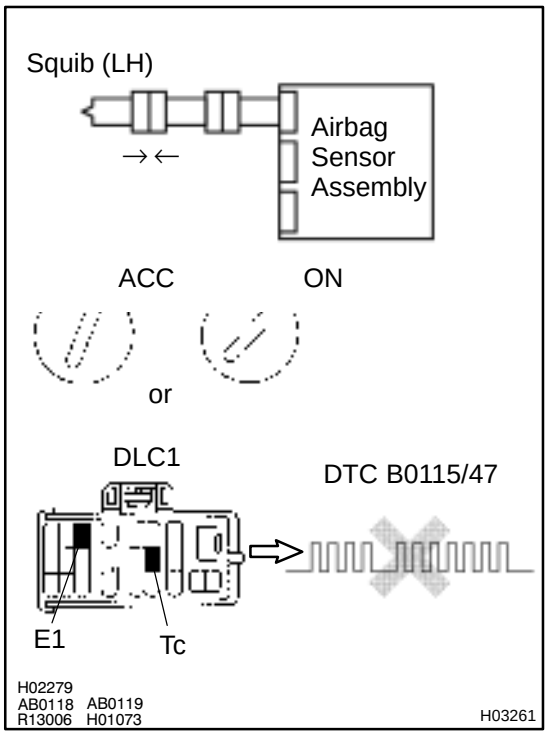

PREPARATION:

(a) Turn ignition switch to LOCK.
(b) Disconnect negative (–) terminal cable from the battery, and wait at least for 90 seconds.
(c) Connect the side airbag assembly (LH) connector.
(d) Connect negative (–) terminal cable to the battery, and wait at least for 2 seconds.

CHECK:

(a) Turn ignition switch to LOOK, and wait at least for 20 second.
(b) Turn ignition switch to ACC or ON, and wait at least for 20 seconds.
(c) Clear DTC stored in memory.
(See page DI–626)
(d) Turn ignition switch to LOCK, and wait at least for 20 seconds.
(e) Turn ignition switch to ACC or ON, and wait at least for 20 seconds.
(f) Check DTC.
(See page DI–626)

OK:

DTC B0115/47 is not output.

HINT:
Codes other than code B0115/47 may be output at this time, but they are not relevant to this check.

NG → **Replace side airbag assembly (LH).**

OK →

From the results of the above inspection, the malfunctioning part can now be considered normal. To make sure of this, use the simulation method to check.

5	Check sub wire harness.

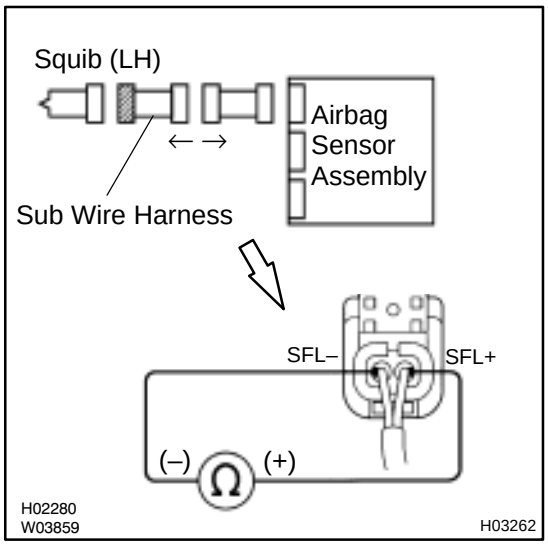

PREPARATION:

(a) Disconnect sub wire harness connector on the airbag sensor assembly side.

(b) Release the airbag activation prevention mechanism of the sub wire harness connector on the airbag sensor assembly side. (See page DI–626)

CHECK:

For the connector (on the sub wire harness side) between the side airbag assembly and the sub wire harness, measure the resistance between SFL+ and SFL–.

OK:

Resistance: 1 MΩ or Higher

NG → **Repair or replace sub wire harness.**

OK

6	Check harness between airbag sensor assembly and sub wire harness.

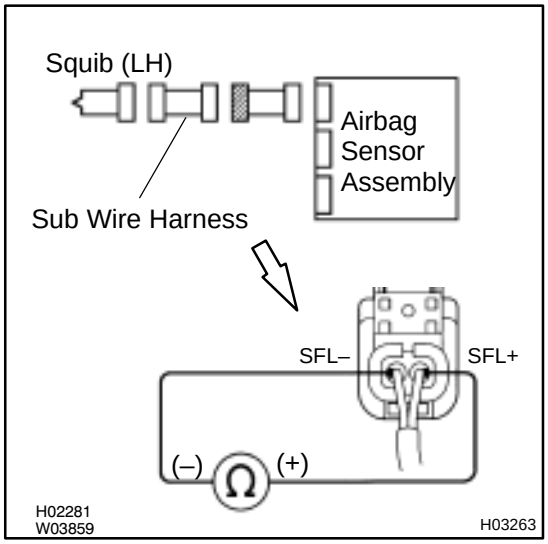

PREPARATION:

Release the airbag activation prevention mechanism of the airbag sensor assembly connector. (See page DI–626)

CHECK:

For the connector (on the sub wire harness side) between the airbag sensor assembly and sub wire harness, measure the resistance between SFL+ and SFL–.

OK:

Resistance: 1 MΩ or Higher

NG → **Repair or replace harness or connector between airbag sensor assembly and sub wire harness.**

OK

From the results of the above inspection, the malfunctioning part can now be considered normal. To make sure of this, use the simulation method to check.

DTC	B0116/48	Open in Side Squib (LH) Circuit (TMC Made)

CIRCUIT DESCRIPTION

The side squib circuit consists of the airbag sensor assembly and side airbag assembly (LH).
It causes the SRS to deploy when the SRS deployment conditions are satisfied.
For details of the function of each component, see OPERATION on page RS–2.
DTC B0116/48 is recorded when an open is detected in the side squib (LH) circuit.

DTC No.	DTC Detecting Condition	Trouble Area
B0116/48	●Open circuit in SFL+ wire harness or SFL– wire harness of squib ●Side squib (LH) malfunction ●Airbag sensor assembly malfunction	●Side airbag assembly (LH) ●Airbag sensor assembly ●Wire harness

WIRING DIAGRAM

See page DI–700.

INSPECTION PROCEDURE

1	**Prepare for inspection. (See step 1 on page DI–787)**

2	**Check side squib (LH) circuit.**

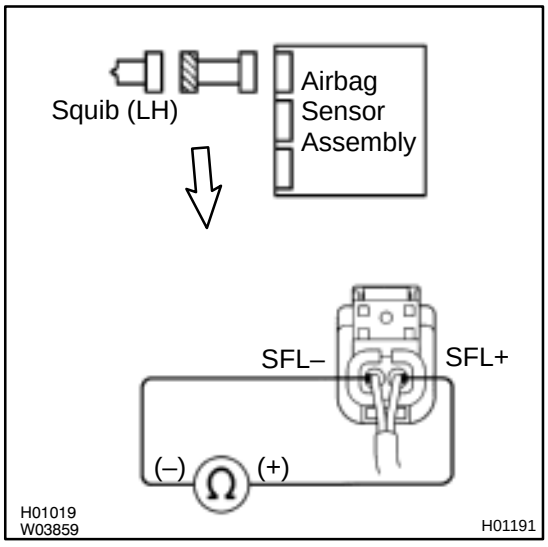

CHECK:
For the connector (on the side airbag assembly side) between the side airbag assembly (LH) and the airbag sensor assembly, measure the resistance between SFL+ and SFL–.

OK:

Resistance: Below 1 Ω

NG → **Repair or replace harness or connector between side airbag assembly (LH) and airbag sensor assembly.**

OK

3	Check airbag sensor assembly.

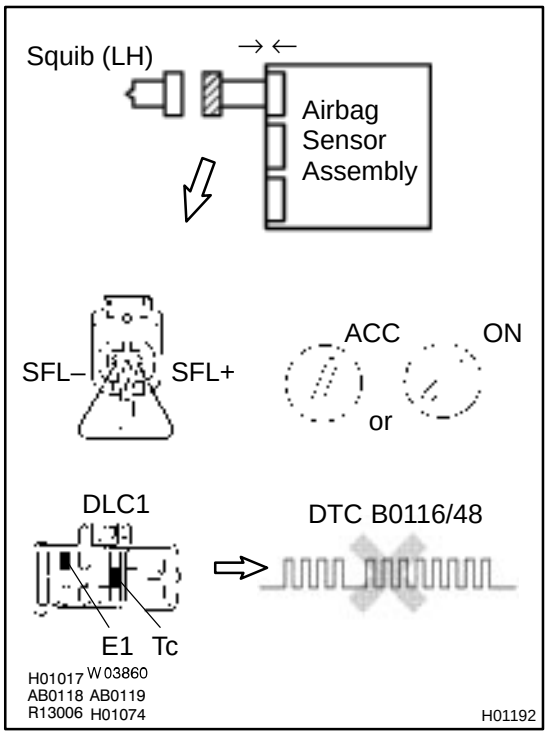

PREPARATION:

(a) Connect the connector to the airbag sensor assembly.

(b) Using a service wire, connect SFL+ and SFL– of the connector (on the side airbag assembly side) between the side airbag assembly (LH) and the airbag sensor assembly.

(c) Connect negative (–) terminal cable to the battery, and wait at least 2 seconds.

CHECK:

(a) Turn ignition switch to ACC or ON and wait at least for 20 seconds.

(b) Clear DTC stored in memory.
(See page DI–626)

(c) Turn ignition switch to LOCK, and wait at least for 20 seconds.

(d) Turn ignition switch to ACC or ON, and wait at least for 20 seconds.

(e) Check DTC.
(See page DI–626)

OK:

DTC B0116/48 is not output.

HINT:

Codes other than code B0116/48 may be output at this time, but they are not relevant to this check.

NG	Replace airbag sensor assembly.

OK

4	Check side squib (LH).

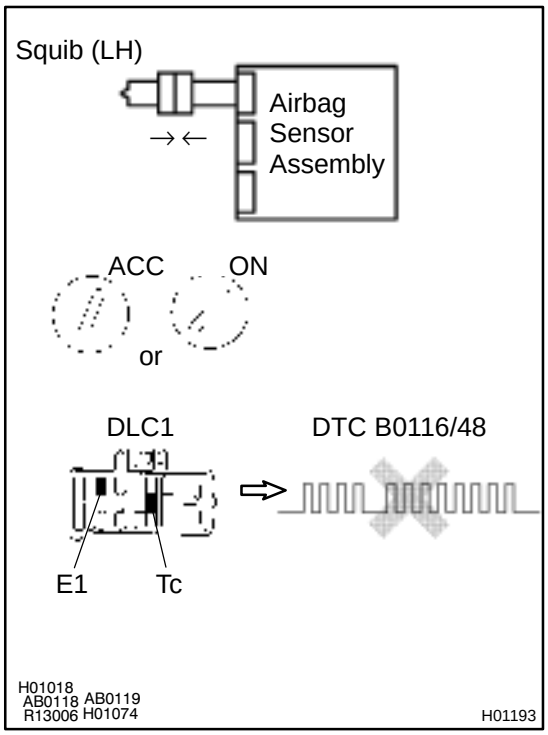

PREPARATION:

(a) Turn ignition switch to LOCK.
(b) Disconnect negative (–) terminal cable from the battery, and wait at least for 90 seconds.
(c) Connect the side airbag assembly (LH) connector.
(d) Connect negative (–) terminal cable to the battery, and wait at least for 2 seconds.

CHECK:

(a) Turn ignition switch to ACC or ON, and wait at least for 20 seconds.
(b) Clear DTC stored in memory.
(See page DI–626)
(c) Turn ignition switch to LOCK, and wait at least for 20 seconds.
(d) Turn ignition switch to ACC or ON, and wait at least for 20 seconds.
(e) Check DTC.
(See page DI–626)

OK:

DTC B0116/48 is not output.

HINT:
Codes other than code B0116/48 may be output at this time, but they are not relevant to this check.

NG → **Replace side airbag assembly (LH).**

OK

From the results of the above inspection, the malfunctioning part can now be considered normal. To make sure of this, use the simulation method to check.

DTC	B0116/48	Open in Side Squib (LH) Circuit (TMMK Made)

CIRCUIT DESCRIPTION

The side squib circuit consists of the airbag sensor assembly and side airbag assembly (LH).
It causes the SRS to deploy when the SRS deployment conditions are satisfied.
For details of the function of each component, see OPERATION on page RS–2.
DTC B0116/48 is recorded when an open short is detected in the side squib (LH) circuit.

DTC No.	DTC Detecting Condition	Trouble Area
B0116/48	●Open circuit in SFL+ wire harness or SFL– wire harness of squib ●Side squib (LH) malfunction ●Airbag sensor assembly malfunction	●Side airbag assembly (LH) ●Airbag sensor assembly ●Wire harness ●Sub wire harness

WIRING DIAGRAM

See page DI–704.

INSPECTION PROCEDURE

1	**Prepare for inspection. (See step 1 on page DI–787)**

2	**Check side squib (LH) circuit.**

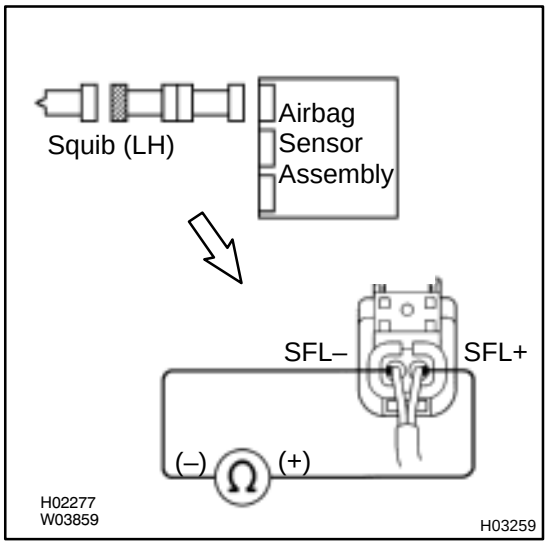

CHECK:
For the connector (on the side airbag assembly side) between the side airbag assembly (LH) and the airbag sensor assembly, measure the resistance between SFL+ and SFL–.
OK:
Resistance: Below 1 Ω

NG → **Go to step 5.**

OK

3	Check airbag sensor assembly.

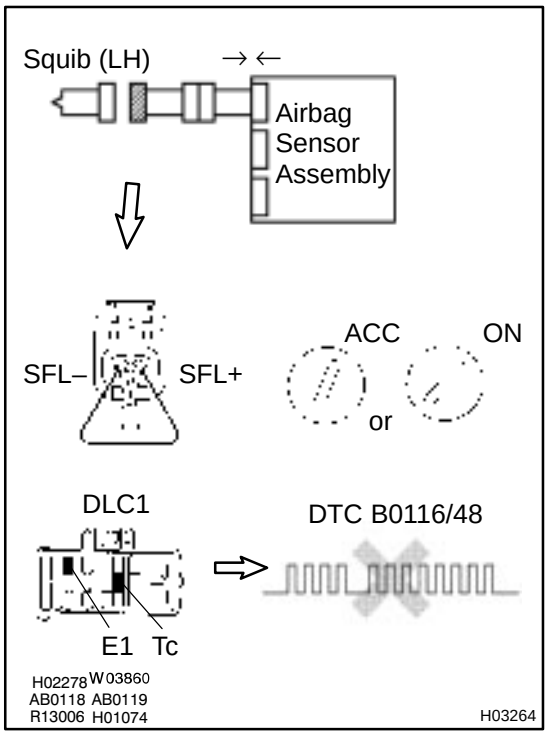

PREPARATION:

(a) Connect the connector to the airbag sensor assembly.

(b) Using a service wire, connect SFL+ and SFL– of the connector (on the side airbag assembly side) between the side airbag assembly (LH) and the airbag sensor assembly.

(c) Connect negative (–) terminal cable to the battery, and wait at least 2 seconds.

CHECK:

(a) Turn ignition switch to ACC or ON and wait at least for 20 seconds.

(b) Clear DTC stored in memory.
(See page DI–626)

(c) Turn ignition switch to LOCK, and wait at least for 20 seconds.

(d) Turn ignition switch to ACC or ON, and wait at least for 20 seconds.

(e) Check DTC.
(See page DI–626)

OK:

DTC B0116/48 is not output.

HINT:

Codes other than code B0116/48 may be output at this time, but they are not relevant to this check.

NG	Replace airbag sensor assembly.

OK

4	Check side squib (LH).

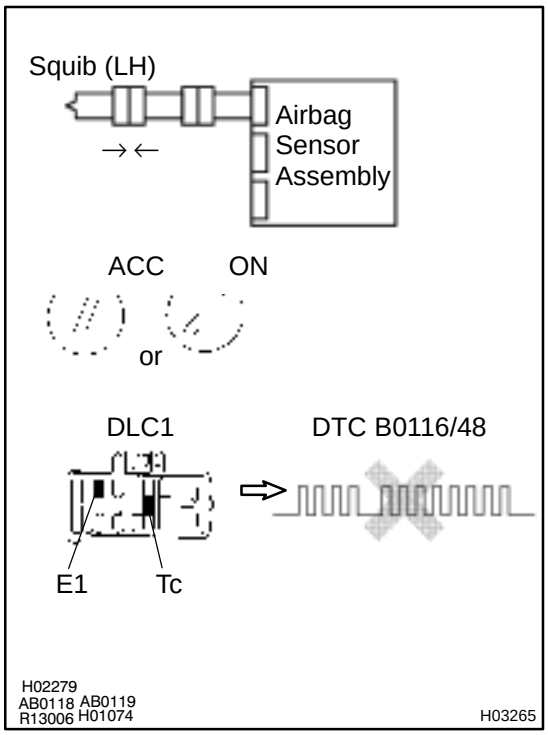

PREPARATION:

(a) Turn ignition switch to LOCK.
(b) Disconnect negative (–) terminal cable from the battery, and wait at least for 90 seconds.
(c) Connect the side airbag assembly (LH) connector.
(d) Connect negative (–) terminal cable to the battery, and wait at least for 2 seconds.

CHECK:

(a) Turn ignition switch to ACC or ON, and wait at least for 20 seconds.
(b) Clear DTC stored in memory.
(See page DI–626)
(c) Turn ignition switch to LOCK, and wait at least for 20 seconds.
(d) Turn ignition switch to ACC or ON, and wait at least for 20 seconds.
(e) Check DTC.
(See page DI–626)

OK:

DTC B0116/48 is not output.

HINT:
Codes other than code B0116/48 may be output at this time, but they are not relevant to this check.

NG → **Replace side airbag assembly (LH).**

OK

From the results of the above inspection, the malfunctioning part can now be considered normal. To make sure of this, use the simulation method to check.

5	Check sub wire harness.

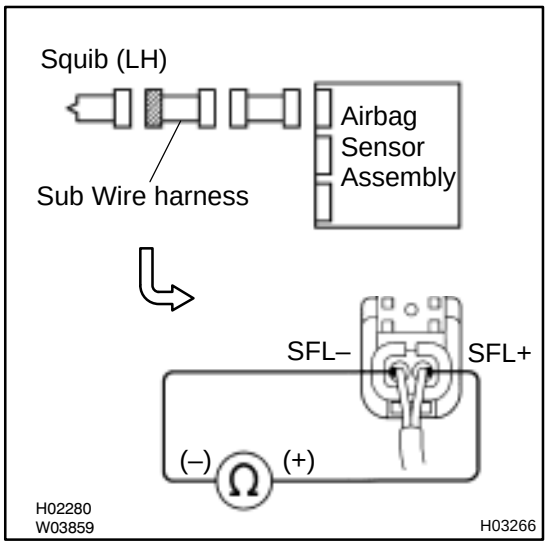

PREPARATION:
Disconnect the sub wire harness connector on the airbag sensor assembly side.

CHECK:
For the connector (on the sub wire harness side) between the side airbag assembly and the sub wire harness, measure the resistance between SFL+ and SFL–.

OK:

Resistance: Below 1 Ω

NG → **Repair or replace sub wire harness.**

OK

6	Check harness between airbag sensor assembly and sub wire harness.

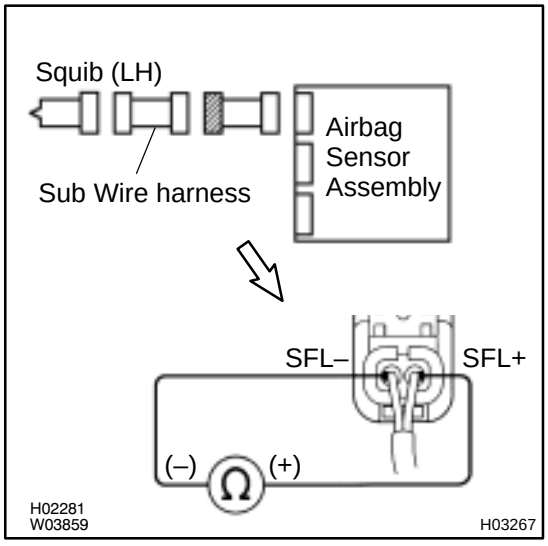

CHECK:
For the connector (on the airbag sensor assembly side) between the airbag sensor assembly and the sub wire harness, measure the resistance between SFL+ and SFL–.

OK:

Resistance: Below 1 Ω

NG → **Repair or replace harness or connector between airbag sensor assembly and sub wire harness.**

OK

From the results of the above inspection, the malfunctioning part can now be considered normal. To make sure of this, use the simulation method to check.

DTC	B0117/45	Short in Side Squib (LH) Circuit (to Ground) (TMC Made)

CIRCUIT DESCRIPTION

The side squib circuit consists of the airbag sensor assembly and side airbag assembly (LH).
It causes the SRS to deploy when the SRS deployment conditions are satisfied.
For details of the function of each component, see OPERATION on page RS–2.
DTC B0117/45 is recorded when ground short is detected in the side squib (LH) circuit.

DTC No.	DTC Detecting Condition	Trouble Area
B0117/45	●Short circuit in side squib (LH) wire harness (to ground) ●Side squib (LH) malfunction ●Airbag sensor assembly malfunction	●Side airbag assembly (LH) ●Airbag sensor assembly ●Wire harness

WIRING DIAGRAM

See page DI–700.

INSPECTION PROCEDURE

1	**Prepare for inspection. (See step 1 on page DI–787)**

2	**Check side squib (LH) circuit.**

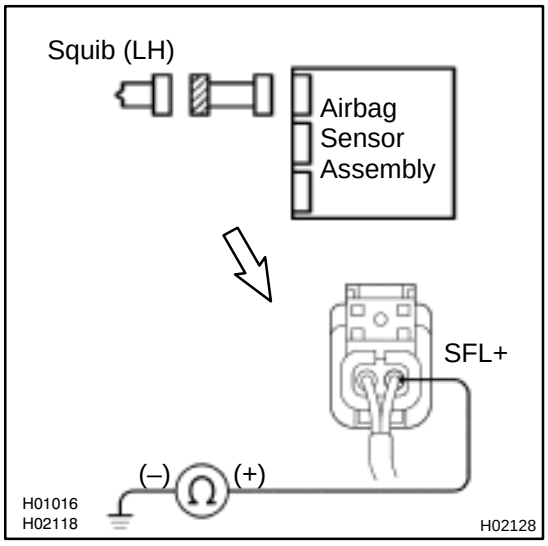

CHECK:

For the connector (on the side airbag assembly side) between the side airbag assembly (LH) and the airbag sensor assembly, measure the resistance between SFL+ and body ground.

OK:

Resistance: 1 MΩ or Higher

NG → **Repair or replace harness or connector between side airbag assembly (LH) and airbag sensor assembly.**

OK

3	Check airbag sensor assembly.

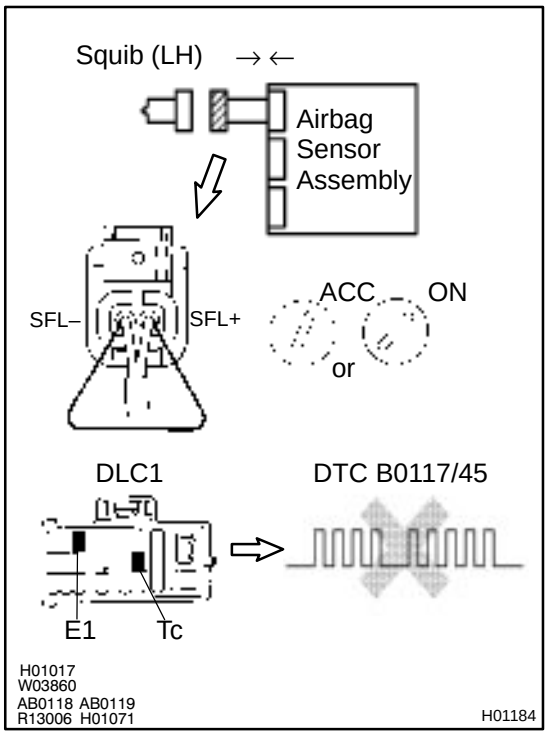

PREPARATION:

(a) Connect the connector to the airbag sensor assembly.

(b) Using a service wire, connect SFL+ and SFL– of the connector (on the side airbag assembly side) between the side airbag assembly (LH) and the airbag sensor assembly.

(c) Connect negative (–) terminal cable to the battery, and wait at least for 2 seconds.

CHECK:

(a) Turn ignition switch to ACC or ON and wait at least for 20 seconds.

(b) Clear DTC stored in memory.
(See step 5 on page DI–626)

(c) Turn ignition switch to LOCK, and wait at least for 20 seconds.

(d) Turn ignition switch to ACC or ON, and wait at least for 20 seconds.

(e) Check DTC.
(See page DI–626)

OK:

DTC B0117/45 is not output.

HINT:

Codes other than code B0117/45 may be output at this time, but they are not relevant to this check.

NG	Replace airbag sensor assembly.

OK

4	Check side squib (LH).

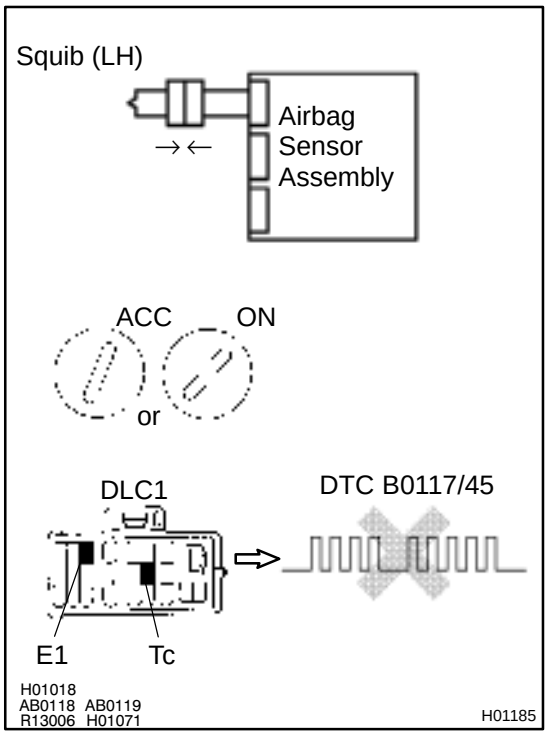

PREPARATION:

(a) Turn ignition switch to LOCK.
(b) Disconnect negative (–) terminal cable from the battery, and wait at least for 90 seconds.
(c) Connect the side airbag assembly (LH) connector.
(d) Connect negative (–) terminal cable to the battery, and wait at least for 2 seconds.

CHECK:

(a) Turn ignition switch to ACC or ON, and wait at least for 20 seconds.
(b) Clear DTC stored in memory.
(See step 5 on page DI–626)
(c) Turn ignition switch to LOCK, and wait at least for 20 seconds.
(d) Turn ignition switch to ACC or ON, and wait at least for 20 seconds.
(e) Check DTC.
(See page DI–626)

OK:

DTC B0117/45 is not output.

HINT:
Codes other than code B0117/45 may be output at this time, but they are not relevant to this check.

NG → **Replace side airbag assembly (LH).**

OK

From the results of the above inspection, the malfunctioning part can now be considered normal. To make sure of this, use the simulation method to check. If the malfunctioning part can not be detected by the simulation method, replace all SRS components including the wire harness.

DTC	B0117/45	Short in Side Squib (LH) Circuit (to Ground) (TMMK Made)

CIRCUIT DESCRIPTION

The side squib circuit consists of the airbag sensor assembly and side airbag assembly (LH).
It causes the SRS to deploy when the SRS deployment conditions are satisfied.
For details of the function of each component, see OPERATION on page RS–2.
DTC B0117/45 is recorded when a ground short is detected in the side squib (LH) circuit.

DTC No.	DTC Detecting Condition	Trouble Area
B0117/45	●Short circuit in side squib (LH) wire harness (to ground) ●Side squib (LH) malfunction ●Airbag sensor assembly malfunction	●Side airbag assembly (LH) ●Airbag sensor assembly ●Wire harness ●Sub wire harness

WIRING DIAGRAM

See page DI–704.

INSPECTION PROCEDURE

1	**Prepare for inspection. (See step 1 on page DI–787)**

2	**Check side squib (LH) circuit.**

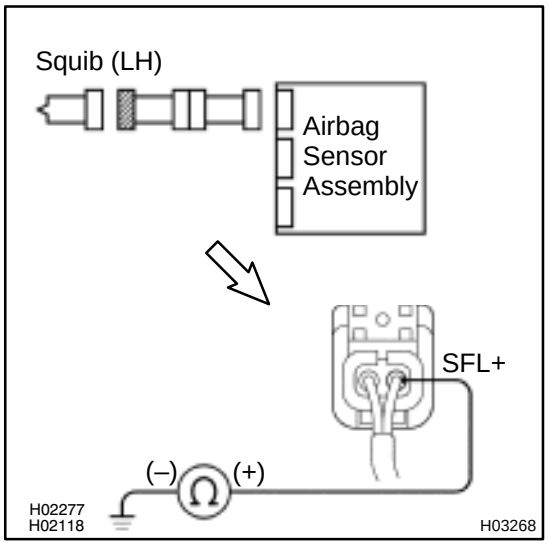

CHECK:
For the connector (on the side airbag assembly side) between the side airbag assembly (LH) and the airbag sensor assembly, measure the resistance between SFL+ and body ground.
OK:
Resistance: 1 MΩ or Higher

NG → **Repair or replace harness or connector between side airbag assembly (LH) and airbag sensor assembly.**

OK

3	Check airbag sensor assembly.

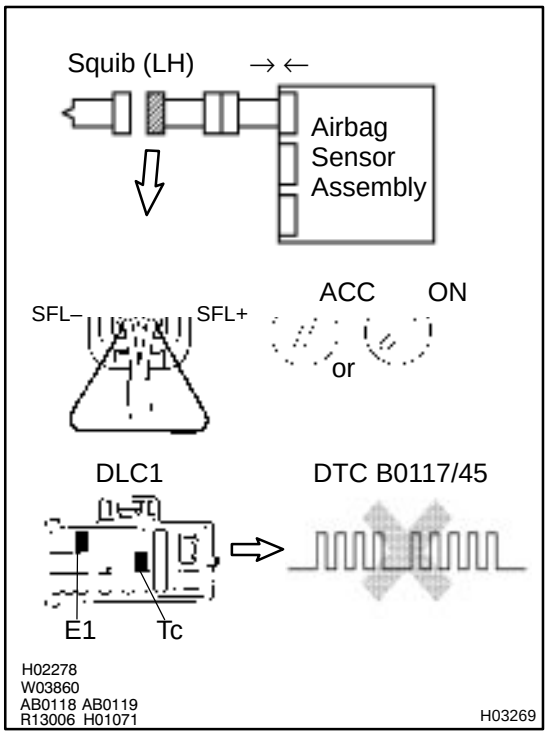

PREPARATION:

(a) Connect the connector to the airbag sensor assembly.

(b) Using a service wire, connect SFL+ and SFL– of the connector (on the side airbag assembly side) between the side airbag assembly (LH) and the airbag sensor assembly.

(c) Connect negative (–) terminal cable to the battery, and wait at least for 2 seconds.

CHECK:

(a) Turn ignition switch to ACC or ON and wait at least for 20 seconds.

(b) Clear DTC stored in memory.
(See step 5 on page DI–626)

(c) Turn ignition switch to LOCK, and wait at least for 20 seconds.

(d) Turn ignition switch to ACC or ON, and wait at least for 20 seconds.

(e) Check DTC.
(See page DI–626)

OK:

DTC B0117/45 is not output.

HINT:

Codes other than code B0117/45 may be output at this time, but they are not relevant to this check.

NG	Replace airbag sensor assembly.

OK

4	Check side squib (LH).

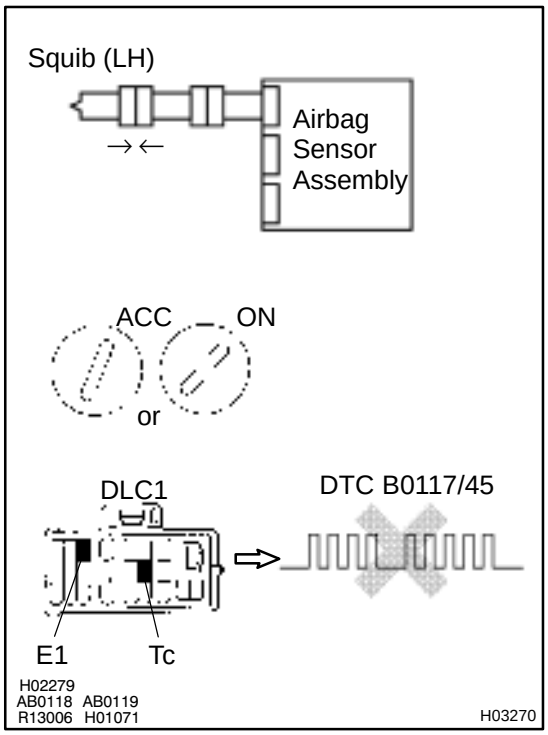

PREPARATION:

(a) Turn ignition switch to LOCK.
(b) Disconnect negative (–) terminal cable from the battery, and wait at least for 90 seconds.
(c) Connect the side airbag assembly (LH) connector.
(d) Connect negative (–) terminal cable to the battery, and wait at least for 2 seconds.

CHECK:

(a) Turn ignition switch to ACC or ON, and wait at least for 20 seconds.
(b) Clear DTC stored in memory.
(See step 5 on page DI–626)
(c) Turn ignition switch to LOCK, and wait at least for 20 seconds.
(d) Turn ignition switch to ACC or ON, and wait at least for 20 seconds.
(e) Check DTC.
(See page DI–626)

OK:

DTC B0117/45 is not output.

HINT:
Codes other than code B0117/45 may be output at this time, but they are not relevant to this check.

NG → **Replace side airbag assembly (LH).**

OK

From the results of the above inspection, the malfunctioning part can now be considered normal. To make sure of this, use the simulation method to check. If the malfunctioning part can not be detected by the simulation method, replace all SRS components including the wire harness.

5	Check sub wire harness.

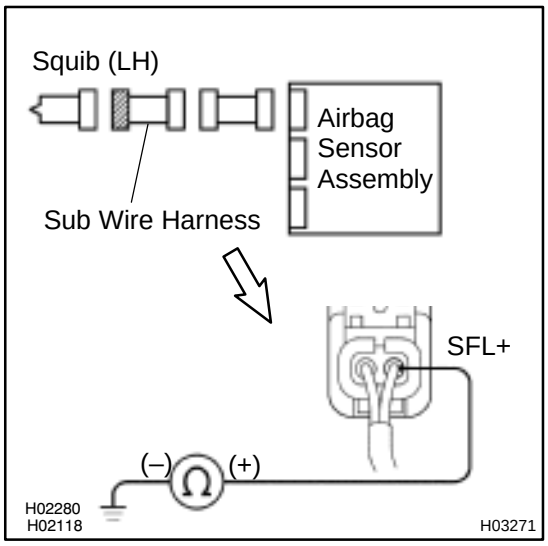

PREPARATION:
Disconnect the sub wire harness connector on the airbag sensor assembly side.
CHECK:
For the connector (on the sub wire harness side) between the side airbag assembly and the sub wire harness, measure the resistance between SFL+ and body ground.
OK:
Resistance: 1 MΩ or Higher

NG → **Repair or replace sub wire harness.**

OK

6	Check harness between airbag sensor assembly and sub wire harness.

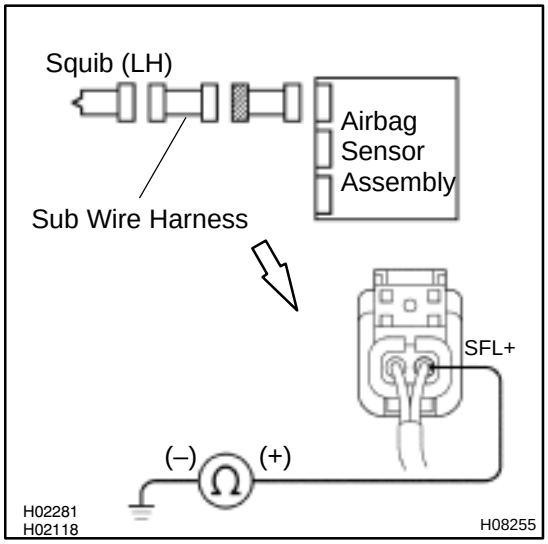

CHECK:
For the connector (on the sub wire harness side) between the airbag sensor assembly and sub wire harness, measure the resistance between SFL+ and body ground.
OK:
Resistance: 1 MΩ or Higher

NG → **Repair or replace harness or connector between airbag sensor assembly and sub wire harness.**

OK

From the results of the above inspection, the malfunctioning part can now be considered normal. To make sure of this, use the simulation method to check. If the malfunctioning part can not be detected by the simulation method, replace all SRS components including the wire harness.

DI1BF–03

DTC	B0118/46	Short in Side Squib (LH) Circuit (to B+) (TMC Made)

CIRCUIT DESCRIPTION

The side squib circuit consists of the airbag sensor assembly and side airbag assembly (LH).
It causes the SRS to deploy when the SRS deployment conditions are satisfied.
For details of the function of each component, see OPERATION on page RS–2.
DTC B0118/46 is recorded when a B+ short is detected in the side squib (LH) circuit.

DTC No.	DTC Detecting Condition	Trouble Area
B0118/46	●Short circuit in side squib (LH) wire harness (to B+) ●Side squib (LH) malfunction ●Airbag sensor assembly malfunction	●Side airbag assembly (LH) ●Airbag sensor assembly ●Wire harness

WIRING DIAGRAM

See page DI–700.

INSPECTION PROCEDURE

1	**Prepare for inspection. (See step 1 on page DI–787)**

2	**Check side squib (LH) circuit.**

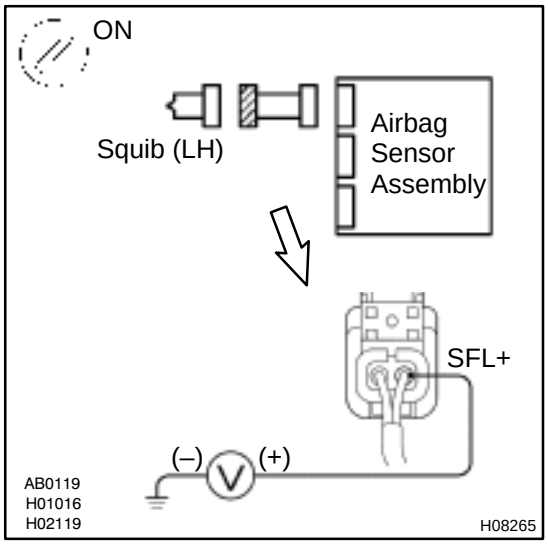

CHECK:

(a) Turn ignition switch to ON.

(b) For the connector (on the side airbag assembly side) between the side airbag assembly (LH) and the airbag sensor assembly, measure the voltage between SFL+ and body ground.

OK:

Voltage: 0 V

NG → **Repair or replace harness or connector between side airbag assembly (LH) and airbag sensor assembly.**

OK

3	Check airbag sensor assembly.

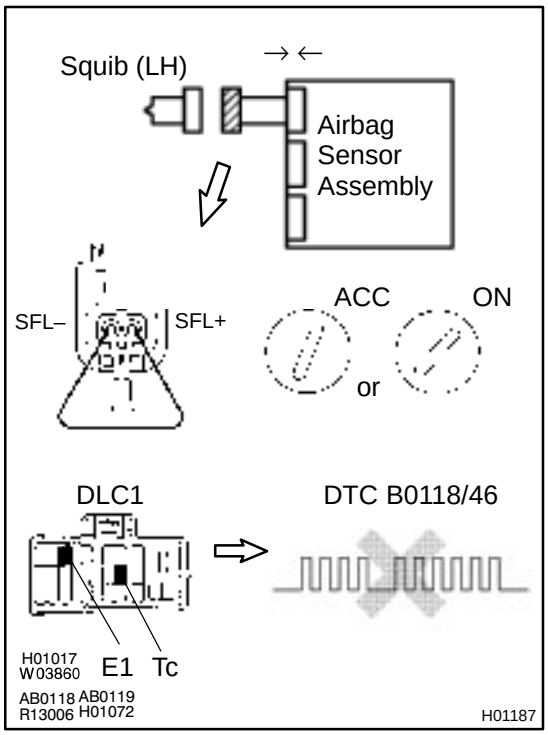

PREPARATION:

(a) Connect the connector to the airbag sensor assembly.

(b) Using a service wire, connect SFL+ and SFL– of the connector (on the side airbag assembly side) between the side airbag assembly (LH) and the airbag sensor assembly.

(c) Connect negative (–) terminal cable to the battery, and wait at least for 2 seconds.

CHECK:

(a) Turn ignition switch to ACC or ON and wait at least for 20 seconds.

(b) Clear DTC stored in memory.
(See step 5 on page DI–626)

(c) Turn ignition switch to LOCK, and wait at least for 20 seconds.

(d) Turn ignition switch to ACC or ON, and wait at least for 20 seconds.

(e) Check DTC.
(See page DI–626)

OK:

DTC B0118/46 is not output.

HINT:

Codes other than code B0118/46 may be output at this time, but they are not relevant to this check.

NG	Replace airbag sensor assembly.

OK

4	Check side squib (LH).

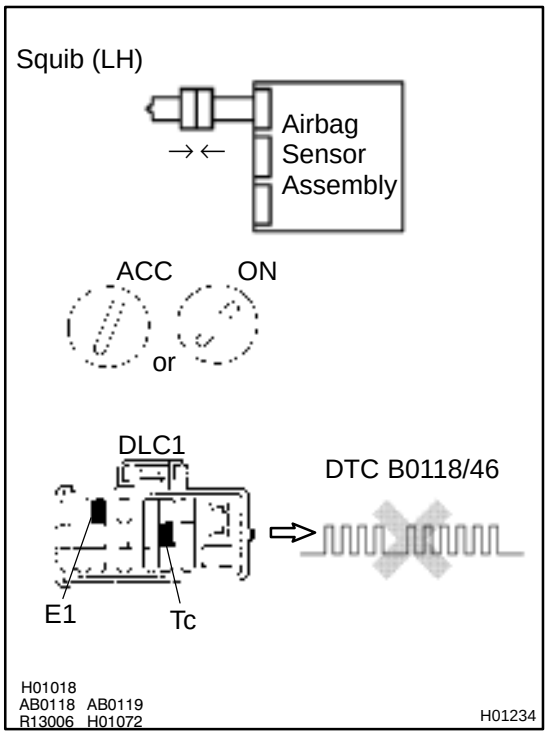

PREPARATION:

(a) Turn ignition switch to LOCK.
(b) Disconnect negative (–) terminal cable from the battery, and wait at least for 90 seconds.
(c) Connect the side airbag assembly (LH) connector.
(d) Connect negative (–) terminal cable to the battery, and wait at least for 2 seconds.

CHECK:

(a) Turn ignition switch to ACC or ON, and wait at least for 20 seconds.
(b) Clear DTC stored in memory.
(See step 5 on page DI–626)
(c) Turn ignition switch to LOCK, and wait at least for 20 seconds.
(d) Turn ignition switch to ACC or ON, and wait at least for 20 seconds.
(e) Check DTC.
(See page DI–626)

OK:

DTC B0118/46 is not output.

HINT:
Codes other than code B0118/46 may be output at this time, but they are not relevant to this check.

NG → **Replace side airbag assembly (LH).**

OK

From the results of the above inspection, the malfunctioning part can now be considered normal. To make sure of this, use the simulation method to check. If the malfunctioning part can not be detected by the simulation method, replace all SRS components including the wire harness.

DI4L7–01

DTC	B0118/46	Short in Side Squib (LH) Circuit (to B+) (TMMK Made)

CIRCUIT DESCRIPTION

The side squib circuit consists of the airbag sensor assembly and side airbag assembly (LH).
It causes the SRS to deploy when the SRS deployment conditions are satisfied.
For details of the function of each component, see OPERATION on page RS–2.
DTC B0118/46 is recorded when a B+ short is detected in the side squib (LH) circuit.

DTC No.	DTC Detecting Condition	Trouble Area
B0118/46	●Short circuit in side squib (LH) wire harness (to B+) ●Side squib (LH) malfunction ●Airbag sensor assembly malfunction	●Side airbag assembly (LH) ●Airbag sensor assembly ●Wire harness ●Sub wire harness

WIRING DIAGRAM

See page DI–704.

INSPECTION PROCEDURE

1	Prepare for inspection. (See step 1 on page DI–787)

2	Check side squib (LH) circuit.

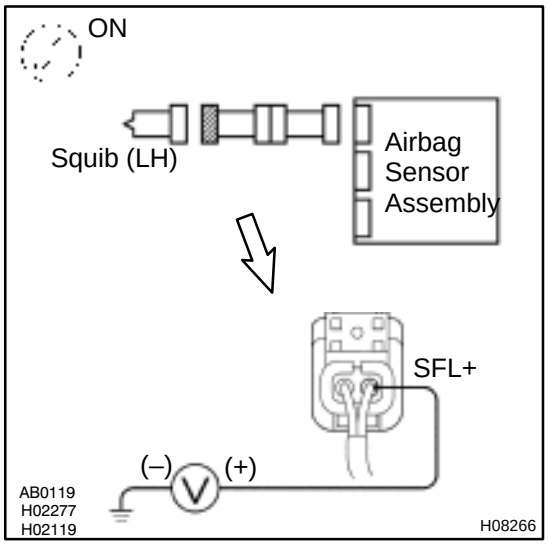

CHECK:

(a) Turn ignition switch to ON.

(b) For the connector (on the side airbag assembly side) between the side airbag assembly (LH) and the airbag sensor assembly, measure the voltage between SFL+ and body ground.

OK:

Voltage: 0 V

NG → **Go to step 5.**

OK

3	Check airbag sensor assembly.

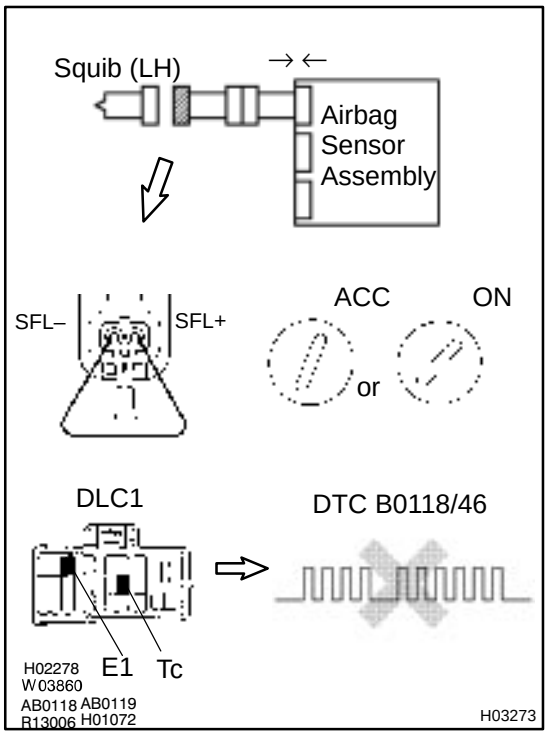

PREPARATION:

(a) Connect the connector to the airbag sensor assembly.

(b) Using a service wire, connect SFL+ and SFL– of the connector (on the side airbag assembly side) between the side airbag assembly (LH) and the airbag sensor assembly.

(c) Connect negative (–) terminal cable to the battery, and wait at least for 2 seconds.

CHECK:

(a) Turn ignition switch to ACC or ON and wait at least for 20 seconds.

(b) Clear DTC stored in memory.
(See step 5 on page DI–626)

(c) Turn ignition switch to LOCK, and wait at least for 20 seconds.

(d) Turn ignition switch to ACC or ON, and wait at least for 20 seconds.

(e) Check DTC.
(See page DI–626)

OK:

DTC B0118/46 is not output.

HINT:

Codes other than code B0118/46 may be output at this time, but they are not relevant to this check.

NG	Replace airbag sensor assembly.

OK

4	Check side squib (LH).

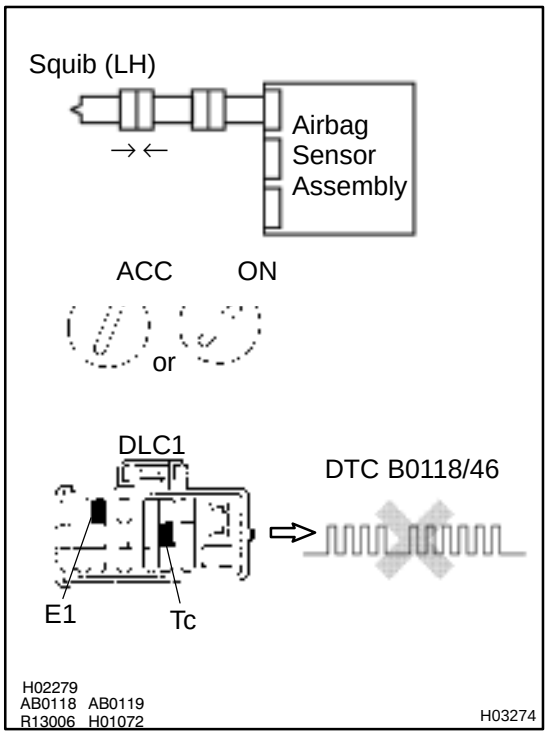

PREPARATION:

(a) Turn ignition switch to LOCK.
(b) Disconnect negative (–) terminal cable from the battery, and wait at least for 90 seconds.
(c) Connect the side airbag assembly (LH) connector.
(d) Connect negative (–) terminal cable to the battery, and wait at least for 2 seconds.

CHECK:

(a) Turn ignition switch to ACC or ON, and wait at least for 20 seconds.
(b) Clear DTC stored in memory.
(See step 5 on page DI–626)
(c) Turn ignition switch to LOCK, and wait at least for 20 seconds.
(d) Turn ignition switch to ACC or ON, and wait at least for 20 seconds.
(e) Check DTC.
(See page DI–626)

OK:

DTC B0118/46 is not output.

HINT:
Codes other than code B0118/46 may be output at this time, but they are not relevant to this check.

NG → **Replace side airbag assembly (LH).**

OK

From the results of the above inspection, the malfunctioning part can now be considered normal. To make sure of this, use the simulation method to check. If the malfunctioning part can not be detected by the simulation method, replace all SRS components including the wire harness.

5	Check sub wire harness.

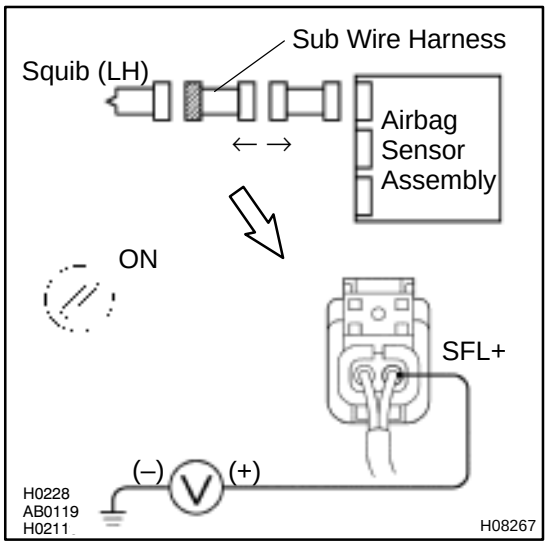

PREPARATION:

Disconnect the sub wire harness connector on the airbag sensor assembly side.

CHECK:

(a) Turn ignition switch to ON.

(b) For the connector (on the sub wire harness side) between the side airbag assembly and the sub wire harness, measure the resistance between SFL+ and body ground.

OK:

Voltage: 0 V

NG	Repair or replace sub wire harness.

OK

6	Check harness between airbag sensor assembly and sub wire harness.

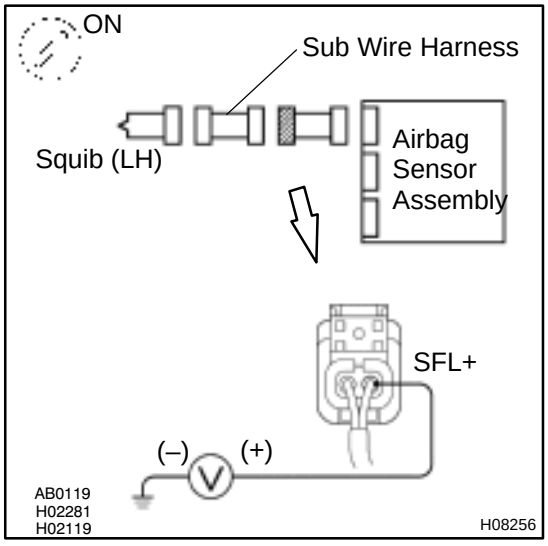

CHECK:

(a) Turn ignition switch to ON.

(b) For the connector (on the sub wire harness side) between the airbag sensor assembly and sub wire harness, measure the voltage between SFL and body ground.

OK:

Voltage: 0 V

NG	Repair or replace harness or connector between airbag sensor assembly and sub wire harness.

OK

From the results of the above inspection, the malfunctioning part can now be considered normal. To make sure of this, use the simulation method to check. If the malfunctioning part can not be detected by the simulation method, replace all SRS components including the wire harness.

DTC	B0130/63	Short in P/T Squib (RH) Circuit

CIRCUIT DESCRIPTION

The P/T squib (RH) circuit consists of the airbag sensor assembly and seat belt pretensioner (RH).
It causes the SRS to deploy when the SRS deployment conditions are satisfied.
For details of the function of each component, see OPERATION on page RS–2.
DTC B0130/63 is recorded when a short is detected in the P/T squib (RH) circuit.

DTC No.	DTC Detecting Condition	Trouble Area
B0130/63	●Short circuit between PR+ wire harness and PR– wire harness of squib ●P/T squib (RH) malfunction ●Airbag sensor assembly malfunction	●Seat belt pretensioner (RH) ●Airbag sensor assembly ●Wire harness

WIRING DIAGRAM

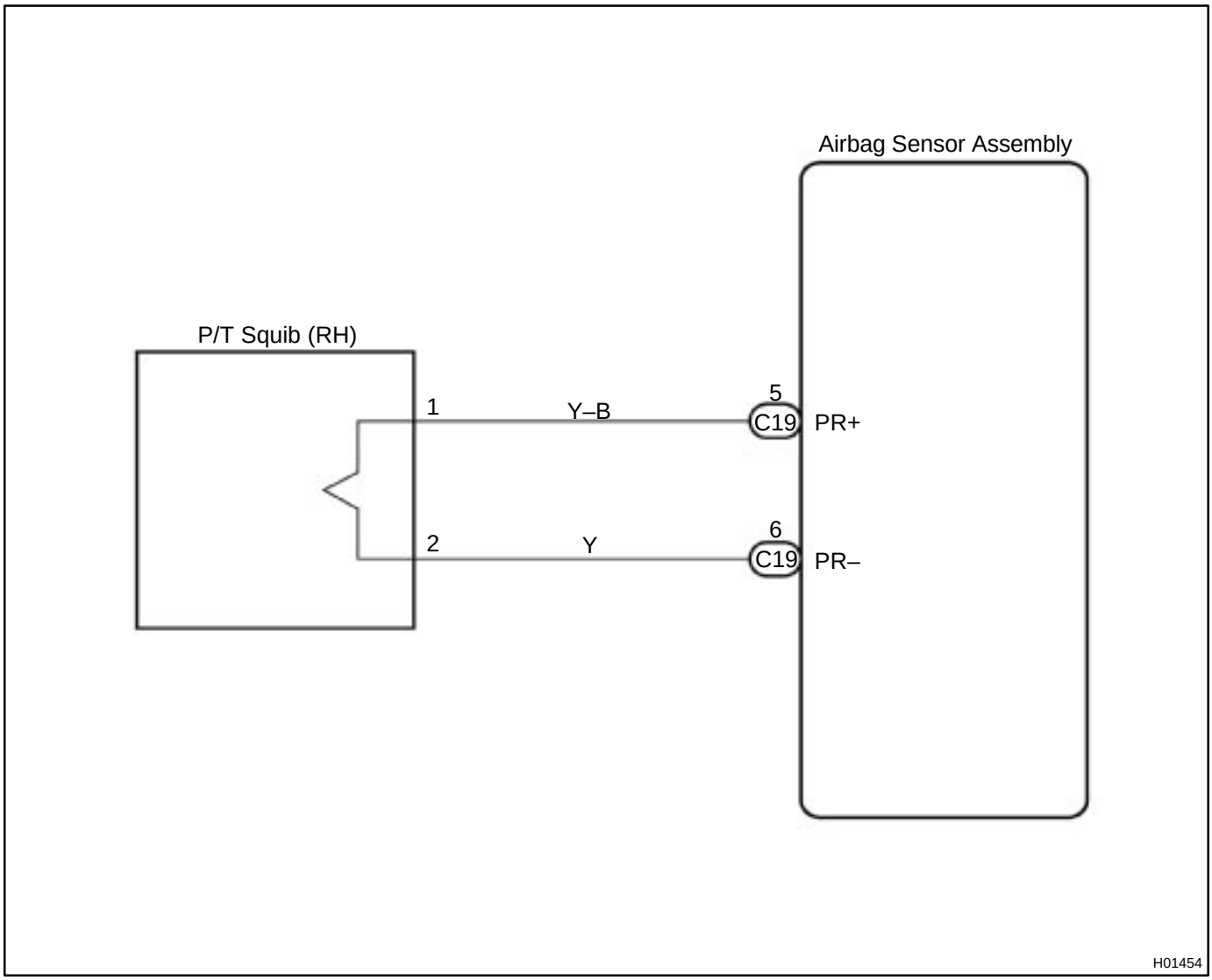

INSPECTION PROCEDURE

1	**Prepare for inspection. (See step 1 on page DI–787)**

2	**Check P/T squib (RH) circuit.**

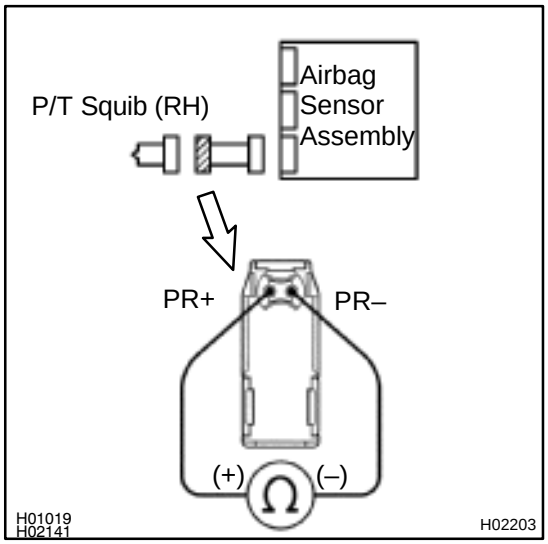

PREPARATION:

Release the airbag activation prevention mechanism of the connector (on the airbag sensor assembly side) between the airbag sensor assembly and the seat belt pretensioner (RH). (See page DI–626).

CHECK:

For the connector (on the seat belt pretensioner side) between the seat belt pretensioner (RH) and the airbag sensor assembly, measure the resistance between PR+ and PR–.

OK:

Resistance: 1 MΩ or Higher

NG → **Repair or replace harness or connector between seat belt pretensioner (RH) and airbag sensor assembly.**

OK

3	Check airbag sensor assembly.

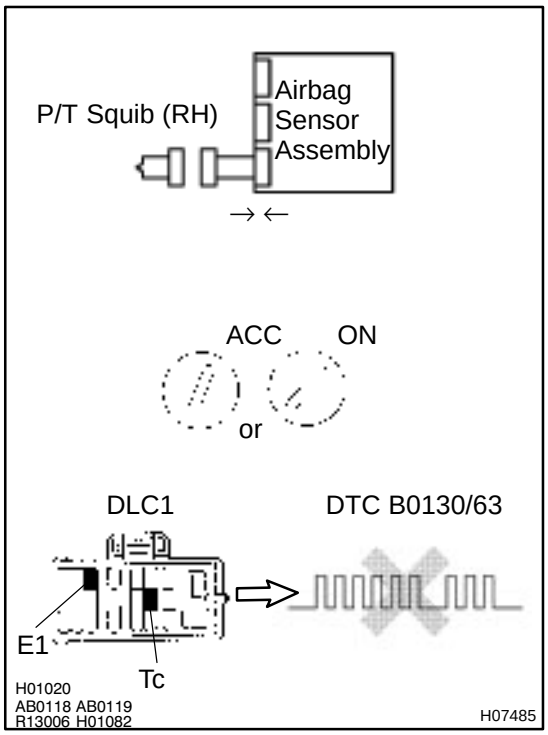

PREPARATION:

(a) Connect the connector to the airbag sensor assembly.
(b) Connect negative (–) terminal cable to the battery, and wait at least for 2 seconds.

CHECK:

(a) Turn ignition switch to ACC or ON and wait at least for 20 seconds.
(b) Clear DTC stored in memory.
(See page DI–626)
(c) Turn ignition switch to LOCK, and wait at least for 20 seconds.
(d) Turn ignition switch to ACC or ON, and wait at least for 20 seconds.
(e) Check DTC.
(See page DI–626)

OK:

DTC B0130/63 is not output.

HINT:
Codes other than code B0130/63 may be output at this time, but they are not relevant to this check.

NG → **Replace airbag sensor assembly.**

OK

4	Check P/T squib (RH).

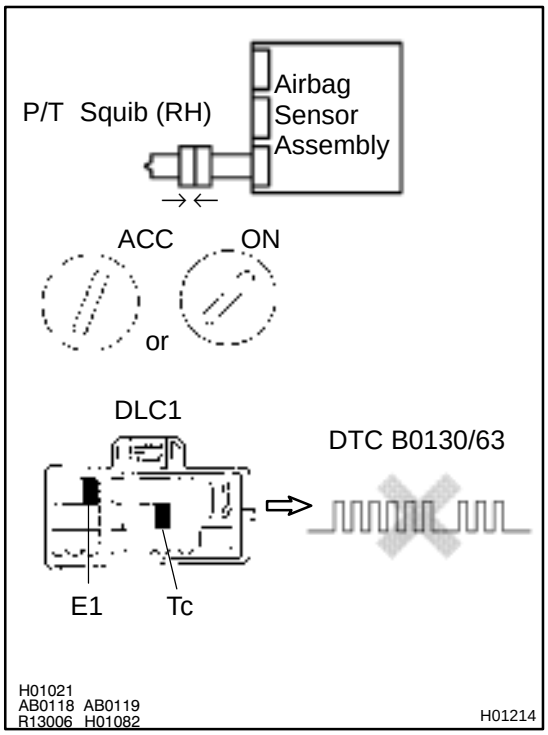

PREPARATION:

(a) Turn ignition switch to LOCK.
(b) Disconnect negative (–) terminal cable from the battery, and wait at least for 90 seconds.
(c) Connect the seat belt pretensioner (RH) connector.
(d) Connect negative (–) terminal cable to the battery, and wait at least for 2 seconds.

CHECK:

(a) Turn ignition switch to LOOK, and wait at least for 20 second.
(b) Turn ignition switch to ACC or ON, and wait at least for 20 seconds.
(c) Clear DTC stored in memory.
(See page DI–626)
(d) Turn ignition switch to LOCK, and wait at least for 20 seconds.
(e) Turn ignition switch to ACC or ON, and wait at least for 20 seconds.
(f) Check DTC.
(See page DI–626)

OK:

DTC B0130/63 is not output.

HINT:
Codes other than code B0130/63 may be output at this time, but they are not relevant to this check.

NG → **Replace seat belt pretensioner (RH).**

OK

From the results of the above inspection, the malfunctioning part can now be considered normal. To make sure of this, use the simulation method to check.

DI1BG–13

DTC	B0131/64	Open in P/T Squib (RH) Circuit

CIRCUIT DESCRIPTION

The P/T squib circuit (RH) consists of the airbag sensor assembly and seat belt pretensioner (RH).
It causes the SRS to deploy when the SRS deployment conditions are satisfied.
For details of the function of each component, see OPERATION on page RS–2.
DTC B0131/64 is recorded when an open is detected in the P/T squib (RH) circuit.

DTC No.	DTC Detecting Condition	Trouble Area
B0131/64	●Open circuit in PR+ wire harness or PR– wire harness of squib ●P/T squib (RH) malfunction ●Airbag sensor assembly malfunction	●Seat belt pretensioner (RH) ●Airbag sensor assembly ●Wire harness

WIRING DIAGRAM

See page DI–730.

INSPECTION PROCEDURE

1	**Prepare for inspection. (See step 1 on page DI–787)**

2	**Check P/T squib (RH) circuit.**

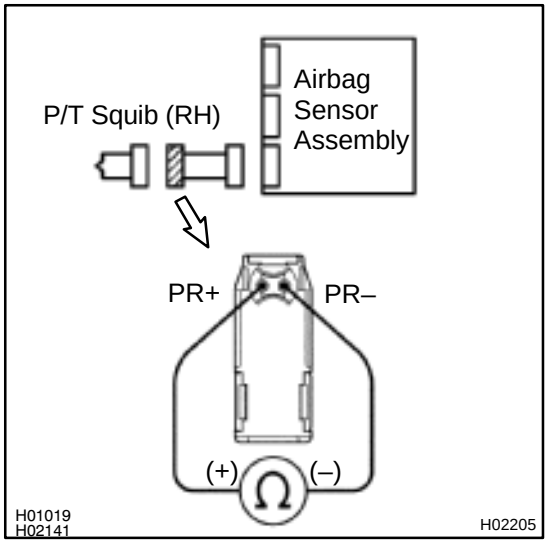

CHECK:

For the connector (on the seat belt pretensioner side) between the seat belt pretensioner (RH) and the airbag sensor assembly, measure the resistance between PR+ and PR–.

OK:

Resistance: Below 1 Ω

NG → **Repair or replace harness or connector between seat belt pretensioner (RH) and airbag sensor assembly.**

OK

3	Check airbag sensor assembly.

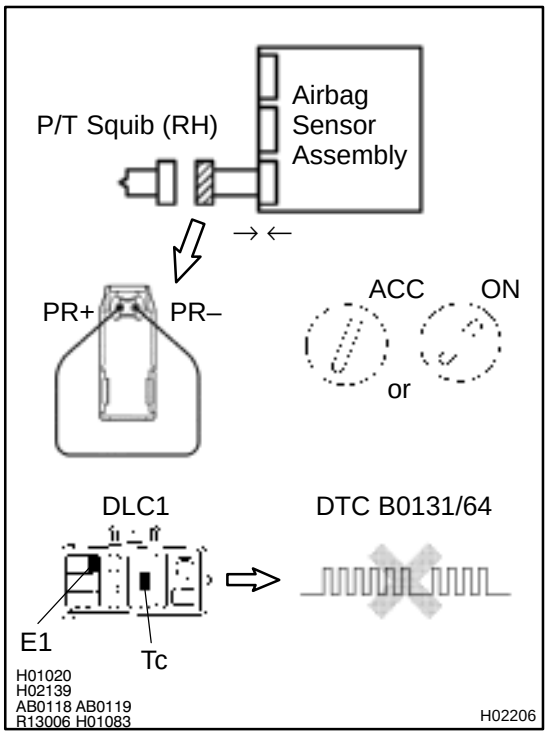

PREPARATION:

(a) Connect the connector to the airbag sensor assembly.

(b) Using a service wire, connect PR+ and PR– of the connector (on the seat belt pretensioner side) between the seat belt pretensioner (RH) and the airbag sensor assembly.

(c) Connect negative (–) terminal cable to the battery, and wait at least for 2 seconds.

CHECK:

(a) Turn ignition switch to ACC or ON and wait at least for 20 seconds.

(b) Clear DTC stored in memory.
(See page DI–626)

(c) Turn ignition switch to LOCK, and wait at least for 20 seconds.

(d) Turn ignition switch to ACC or ON, and wait at least for 20 seconds.

(e) Check DTC.
(See page DI–626)

OK:

DTC B0131/64 is not output.

HINT:

Codes other than code B0131/64 may be output at this time, but they are not relevant to this check.

NG → **Replace airbag sensor assembly.**

OK

4	Check P/T squib (RH).

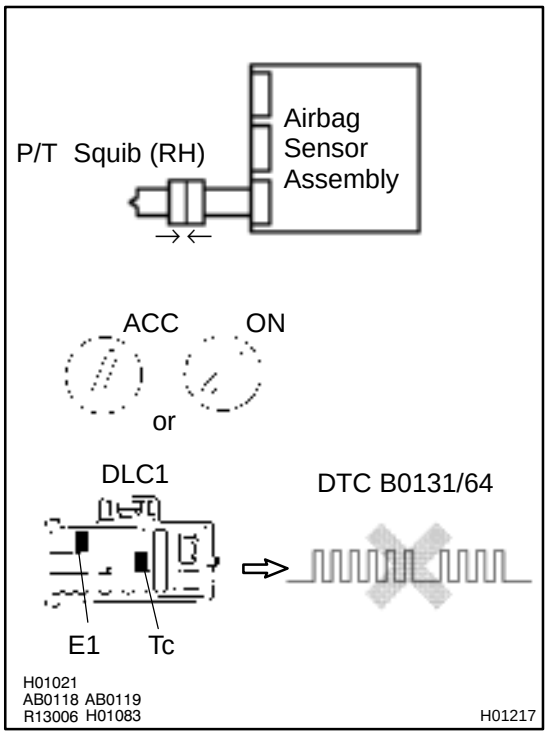

PREPARATION:

(a) Turn ignition switch to LOCK.
(b) Disconnect negative (–) terminal cable from the battery, and wait at least for 90 seconds.
(c) Connect the seat belt pretensioner (RH) connector.
(d) Connect negative (–) terminal cable to the battery, and wait at least for 2 seconds.

CHECK:

(a) Turn ignition switch to ACC or ON, and wait at least for 20 seconds.
(b) Clear DTC stored in memory.
(See page DI–626)
(c) Turn ignition switch to LOCK, and wait at least for 20 seconds.
(d) Turn ignition switch to ACC or ON, and wait at least for 20 seconds.
(e) Check DTC.
(See page DI–626)

OK:

DTC B0131/64 is not output.

HINT:
Codes other than code B0131/64 may be output at this time, but they are not relevant to this check.

NG → **Replace seat belt pretensioner (RH).**

OK

From the results of the above inspection, the malfunctioning part can now be considered normal. To make sure of this, use the simulation method to check.

DTC	B0132/61	Short in P/T Squib (RH) Circuit (to Ground)

CIRCUIT DESCRIPTION

The P/T squib (RH) circuit consists of the airbag sensor assembly and seat belt pretensioner (RH).
It causes the SRS to deploy when the SRS deployment conditions are satisfied.
For details of the function of each component, see OPERATION on page RS–2.
DTC B0132/61 is recorded when a ground short is detected in the P/T squib (RH) circuit.

DTC No.	DTC Detecting Condition	Trouble Area
B0132/61	●Short circuit in P/T squib (RH) wire harness (to ground) ●P/T squib (RH) malfunction ●Airbag sensor assembly malfunction	●Seat belt pretensioner (RH) ●Airbag sensor assembly ●Wire harness

WIRING DIAGRAM

See page DI–730.

INSPECTION PROCEDURE

1	**Prepare for inspection. (See step 1 on page DI–787)**

2	**Check P/T squib (RH) circuit.**

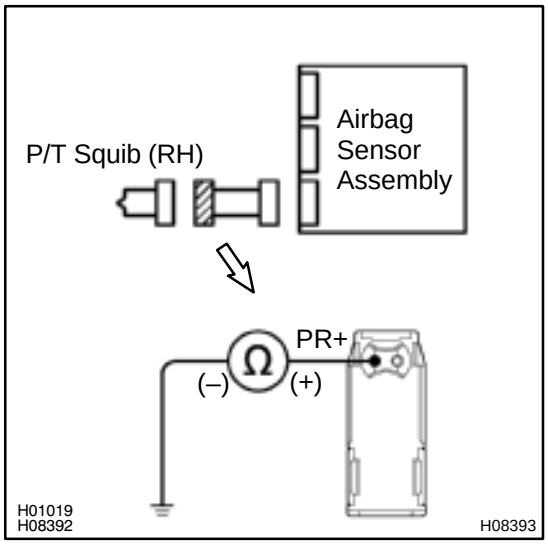

CHECK:

For the connector (on the seat belt pretensioner side) between the seat belt pretensioner (RH) and the airbag sensor assembly, measure the resistance between PR+ and body ground.

OK:

Resistance: 1 MΩ or Higher

NG → **Repair or replace harness or connector between seat belt pretensioner (RH) and airbag sensor assembly.**

OK

3	Check airbag sensor assembly.

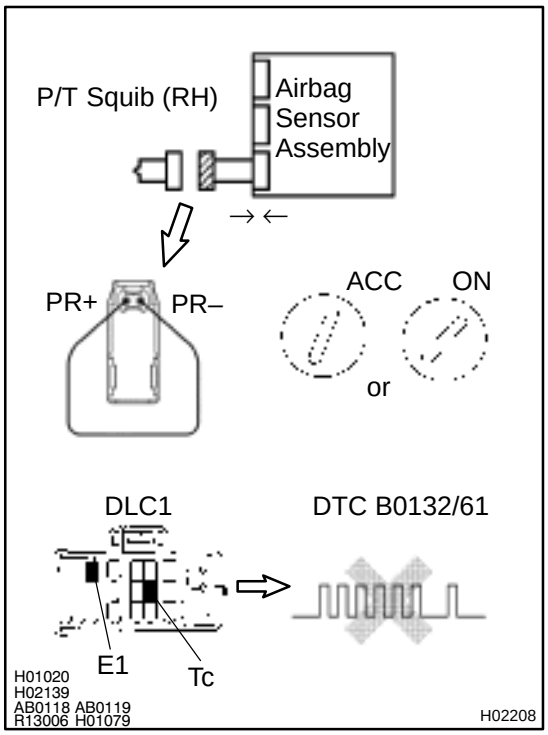

PREPARATION:

(a) Connect the connector to the airbag sensor assembly.

(b) Using a service wire, connect PR+ and PR– of the connector (on the seat belt pretensioner side) between the seat belt pretensioner (RH) and the airbag sensor assembly.

(c) Connect negative (–) terminal cable to the battery, and wait at least for 2 seconds.

CHECK:

(a) Turn ignition switch to ACC or ON and wait at least for 20 seconds.

(b) Clear DTC stored in memory.
(See step 5 on page DI–626)

(c) Turn ignition switch to LOCK, and wait at least for 20 seconds.

(d) Turn ignition switch to ACC or ON, and wait at least for 20 seconds.

(e) Check DTC.
(See page DI–626)

OK:

DTC B0132/61 is not output.

HINT:

Codes other than code B0132/61 may be output at this time, but they are not relevant to this check.

NG	Replace airbag sensor assembly.

OK

4	Check P/T squib (RH).

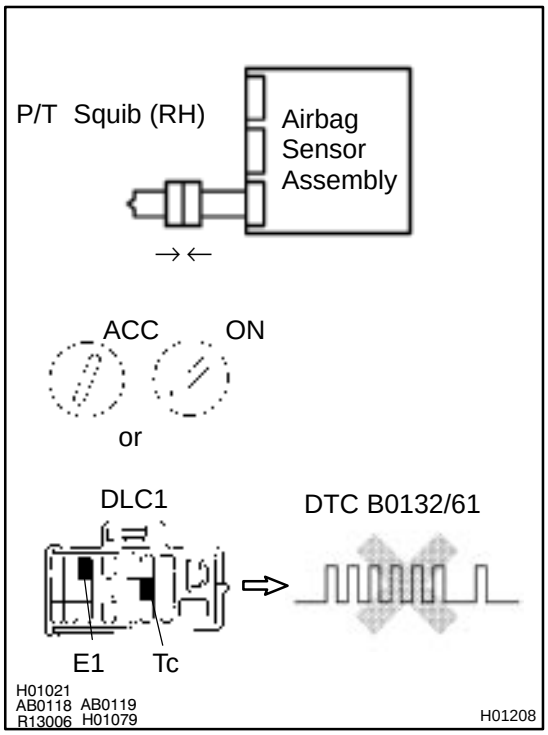

PREPARATION:

(a) Turn ignition switch to LOCK.
(b) Disconnect negative (–) terminal cable from the battery, and wait at least for 90 seconds.
(c) Connect the seat belt pretensioner (RH) connector.
(d) Connect negative (–) terminal cable to the battery, and wait at least for 2 seconds.

CHECK:

(a) Turn ignition switch to ACC or ON, and wait at least for 20 seconds.
(b) Clear DTC stored in memory.
(See step 5 on page DI–626)
(c) Turn ignition switch to LOCK, and wait at least for 20 seconds.
(d) Turn ignition switch to ACC or ON, and wait at least for 20 seconds.
(e) Check DTC.
(See page DI–626)

OK:

DTC B0132/61 is not output.

HINT:
Codes other than code B0132/61 may be output at this time, but they are not relevant to this check.

NG → **Replace seat belt pretensioner (RH).**

OK

From the results of the above inspection, the malfunctioning part can now be considered normal. To make sure of this, use the simulation method to check. If the malfunctioning part can not be detected by the simulation method, replace all SRS components including the wire harness.

DTC	B0133/62	Short in P/T Squib (RH) Circuit (to B+)

CIRCUIT DESCRIPTION

The P/T squib (RH) circuit consists of the airbag sensor assembly and seat belt pretensioner (RH).
It causes the SRS to deploy when the SRS deployment conditions are satisfied.
For details of the function of each component, see OPERATION on page RS–2.
DTC B0133/62 is recorded when a B+ short is detected in the P/T squib (RH) circuit.

DTC No.	DTC Detecting Condition	Trouble Area
B0133/62	●Short circuit in seat belt pretensioner (RH) wire harness (to B+) ●P/T squib (RH) malfunction ●Airbag sensor assembly malfunction	●Seat belt pretensioner (RH) ●Airbag sensor assembly ●Wire harness

WIRING DIAGRAM

See page DI–730.

INSPECTION PROCEDURE

1	**Prepare for inspection. (See step 1 on page DI–787)**

2	**Check P/T squib (RH) circuit.**

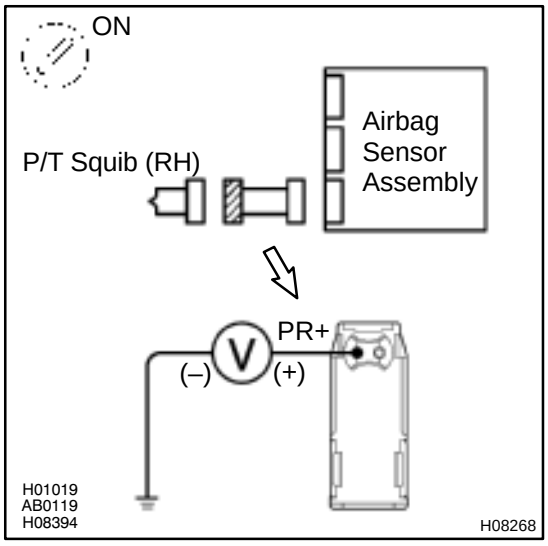

CHECK:

(a) Turn ignition switch to ON.

(b) For the connector (on the seat belt pretensioner side) between the seat belt pretensioner (RH) and the airbag sensor assembly, measure the voltage between PR+ and body ground.

OK:

Voltage: 0 V

NG → **Repair or replace harness or connector between seat belt pretensioner (RH) and airbag sensor assembly.**

OK

3	Check airbag sensor assembly.

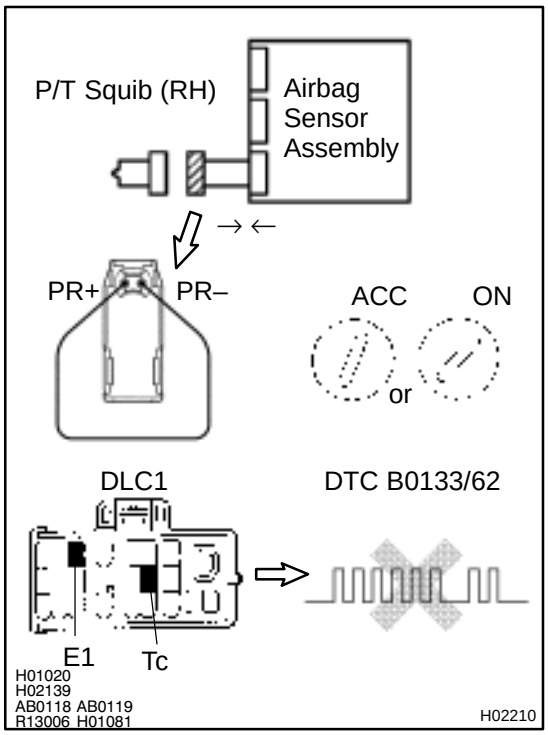

PREPARATION:

(a) Connect the connector to the airbag sensor assembly.

(b) Using a service wire, connect PR+ and PR– of the connector (on the seat belt pretensioner side) between the seat belt pretensioner (RH) and the airbag sensor assembly.

(c) Connect negative (–) terminal cable to the battery, and wait at least for 2 seconds.

CHECK:

(a) Turn ignition switch to ACC or ON and wait at least for 20 seconds.

(b) Clear DTC stored in memory.
(See step 5 on page DI–626)

(c) Turn ignition switch to LOCK, and wait at least for 20 seconds.

(d) Turn ignition switch to ACC or ON, and wait at least for 20 seconds.

(e) Check DTC.
(See page DI–626)

OK:

DTC B0133/62 is not output.

HINT:

Codes other than code B0133/62 may be output at this time, but they are not relevant to this check.

NG	Replace airbag sensor assembly.

OK

4	Check P/T squib (RH).

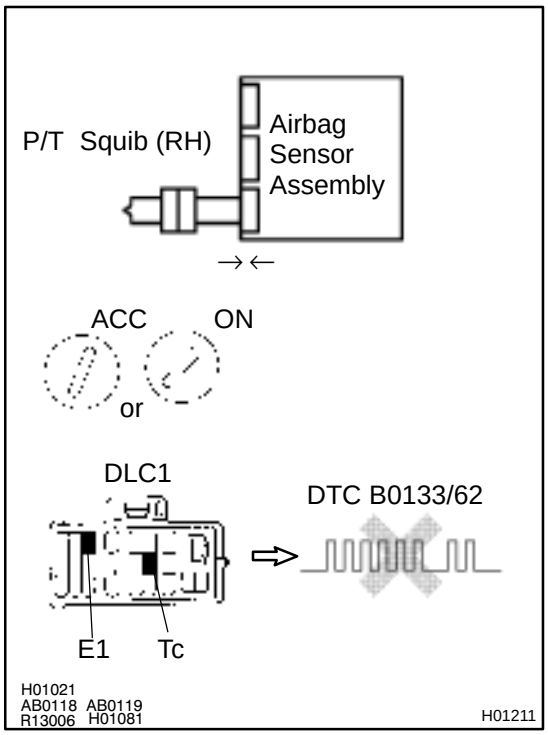

PREPARATION:

(a) Turn ignition switch to LOCK.
(b) Disconnect negative (–) terminal cable from the battery, and wait at least for 90 seconds.
(c) Connect the seat belt pretensioner (RH) connector.
(d) Connect negative (–) terminal cable to the battery, and wait at least for 2 seconds.

CHECK:

(a) Turn ignition switch to ACC or ON, and wait at least for 20 seconds.
(b) Clear DTC stored in memory.
(See step 5 on page DI–626)
(c) Turn ignition switch to LOCK, and wait at least for 20 seconds.
(d) Turn ignition switch to ACC or ON, and wait at least for 20 seconds.
(e) Check DTC.
(See page DI–626)

OK:

DTC B0133/62 is not output.

HINT:
Codes other than code B0133/62 may be output at this time, but they are not relevant to this check.

NG → **Replace seat belt pretensioner (RH).**

OK

From the results of the above inspection, the malfunctioning part can now be considered normal. To make sure of this, use the simulation method to check. If the malfunctioning part can not be detected by the simulation method, replace all SRS components including the wire harness.

DI16W–17

DTC	B0135/73	Short in P/T Squib (LH) Circuit

CIRCUIT DESCRIPTION

The P/T squib (LH) circuit consists of the airbag sensor assembly and seat belt pretensioner (LH).
It causes the SRS to deploy when the SRS deployment conditions are satisfied.
For details of the function of each component, see OPERATION on page RS–2.
DTC B0135/73 is recorded when a short is detected in the P/T squib (LH) circuit.

DTC No.	DTC Detecting Condition	Trouble Area
B0135/73	●Short circuit between PL+ wire harness and PL– wire harness of squib ●P/T squib (LH) malfunction ●Airbag sensor assembly malfunction	●Seat belt pretensioner (LH) ●Airbag sensor assembly ●Wire harness

WIRING DIAGRAM

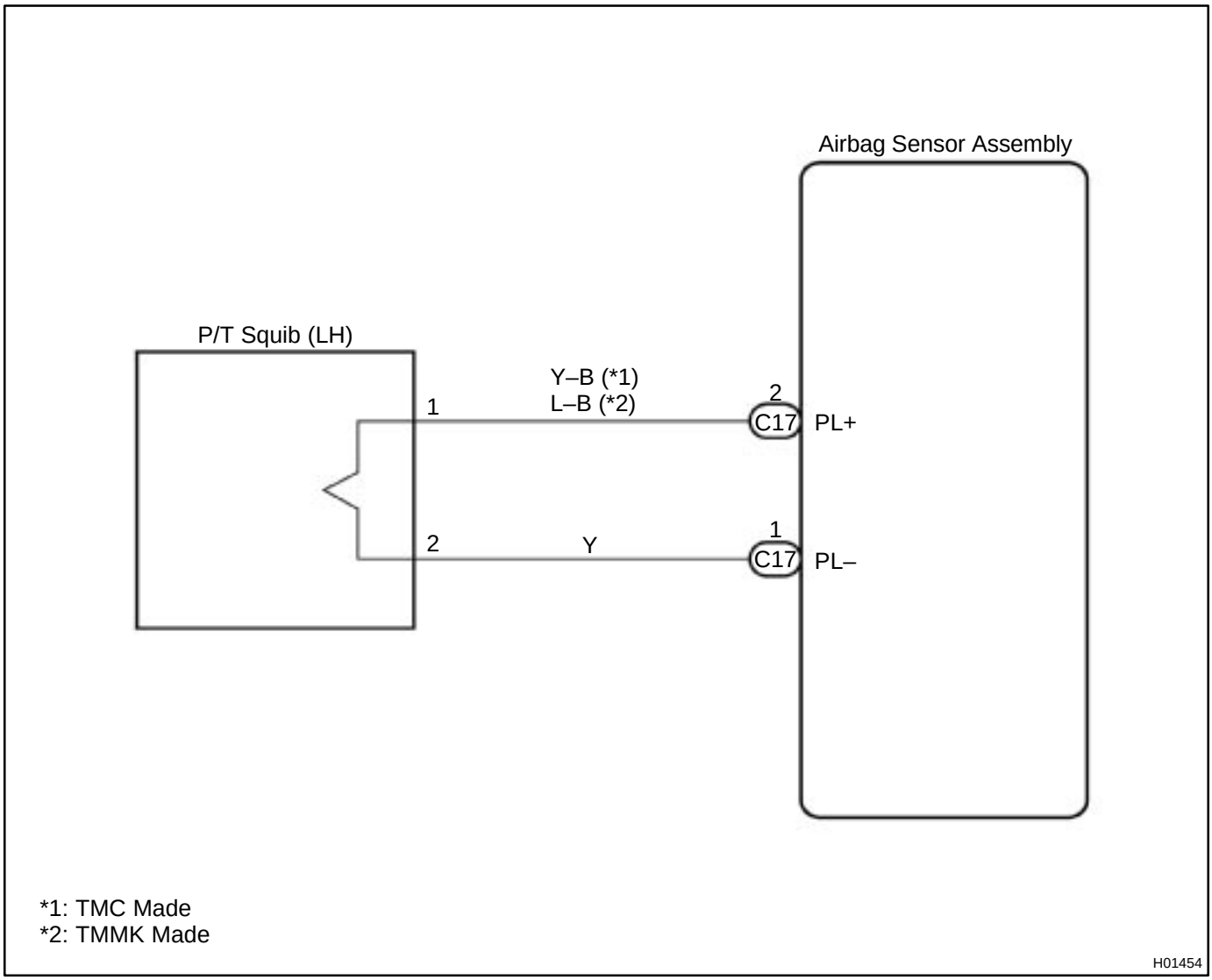

*1: TMC Made
*2: TMMK Made

H01454

INSPECTION PROCEDURE

1	**Prepare for inspection. (See step 1 on page DI–787)**

2	**Check P/T squib (LH) circuit.**

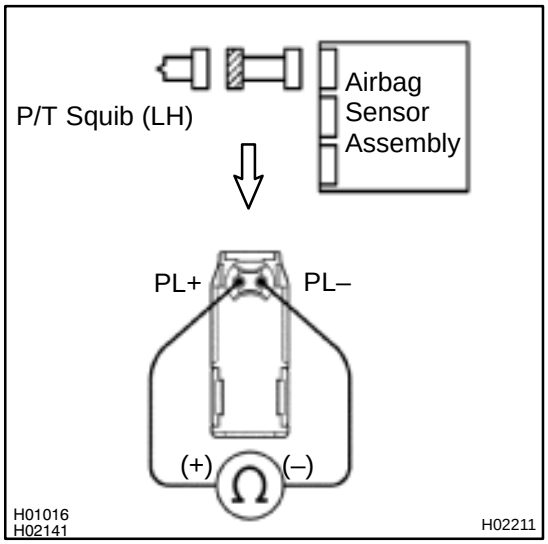

PREPARATION:

Release the airbag activation prevention mechanism of the connector (on the airbag sensor assembly side) between the airbag sensor assembly and the seat belt pretensioner (LH). (See page DI–626)

CHECK:

For the connector (on the seat belt pretensioner side) between the seat belt pretensioner (LH) and the airbag sensor assembly, measure the resistance between PL+ and PL–.

OK:

Resistance: 1 MΩ or Higher

NG → **Repair or replace harness or connector between seat belt pretensioner (LH) and airbag sensor assembly.**

OK

3	Check airbag sensor assembly.

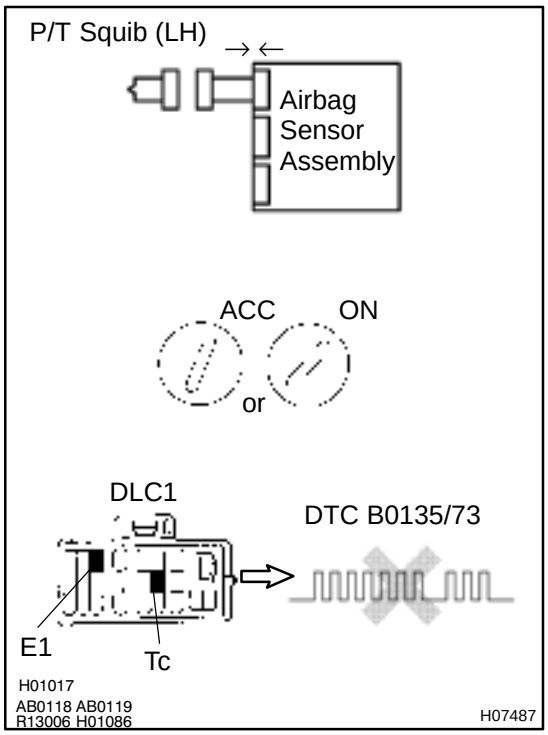

PREPARATION:

(a) Connect the connector to the airbag sensor assembly.
(b) Connect negative (–) terminal cable to the battery, and wait at least for 2 seconds.

CHECK:

(a) Turn ignition switch to ACC or ON and wait at least for 20 seconds.
(b) Clear DTC stored in memory.
(See page DI–626)
(c) Turn ignition switch to LOCK, and wait at least for 20 seconds.
(d) Turn ignition switch to ACC or ON, and wait at least for 20 seconds.
(e) Check DTC.
(See page DI–626)

OK:

DTC B0135/73 is not output.

HINT:
Codes other than code B0135/73 may be output at this time, but they are not relevant to this check.

NG → **Replace airbag sensor assembly.**

OK

4	Check P/T squib (LH).

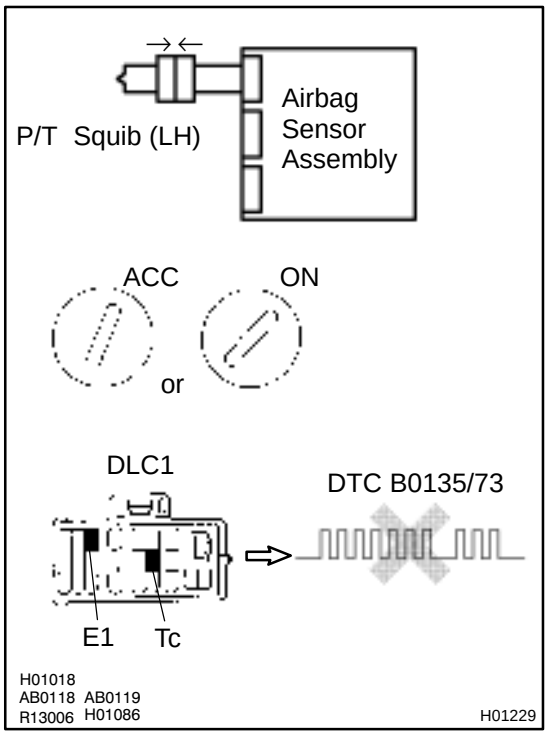

PREPARATION:

(a) Turn ignition switch to LOCK.
(b) Disconnect negative (–) terminal cable from the battery, and wait at least for 90 seconds.
(c) Connect the seat belt pretensioner (LH) connector.
(d) Connect negative (–) terminal cable to the battery, and wait at least for 2 seconds.

CHECK:

(a) Turn ignition switch to LOOK, and wait at least for 20 second.
(b) Turn ignition switch to ACC or ON, and wait at least for 20 seconds.
(c) Clear DTC stored in memory.
(See page DI–626)
(d) Turn ignition switch to LOCK, and wait at least for 20 seconds.
(e) Turn ignition switch to ACC or ON, and wait at least for 20 seconds.
(f) Check DTC.
(See page DI–626)

OK:

DTC B0135/73 is not output.

HINT:
Codes other than code B0135/73 may be output at this time, but they are not relevant to this check.

NG → **Replace seat belt pretensioner (LH).**

OK

From the results of the above inspection, the malfunctioning part can now be considered normal. To make sure of this, use the simulation method to check.

DI1BJ–14

DTC	B0136/74	Open in P/T Squib (LH) Circuit

CIRCUIT DESCRIPTION

The P/T squib circuit (LH) consists of the airbag sensor assembly and seat belt pretensioner (LH).
It causes the SRS to deploy when the SRS deployment conditions are satisfied.
For details of the function of each component, see OPERATION on page RS–2.
DTC B0136/74 is recorded when an open is detected in the P/T squib (LH) circuit.

DTC No.	DTC Detecting Condition	Trouble Area
B0136/74	●Open circuit in PL+ wire harness or PL– wire harness of squib ●P/T squib (LH) malfunction ●Airbag sensor assembly malfunction	●Seat belt pretensioner (LH) ●Airbag sensor assembly ●Wire harness

WIRING DIAGRAM

See page DI–743.

INSPECTION PROCEDURE

1	**Prepare for inspection. (See step 1 on page DI–787)**

2	**Check P/T squib (LH) circuit.**

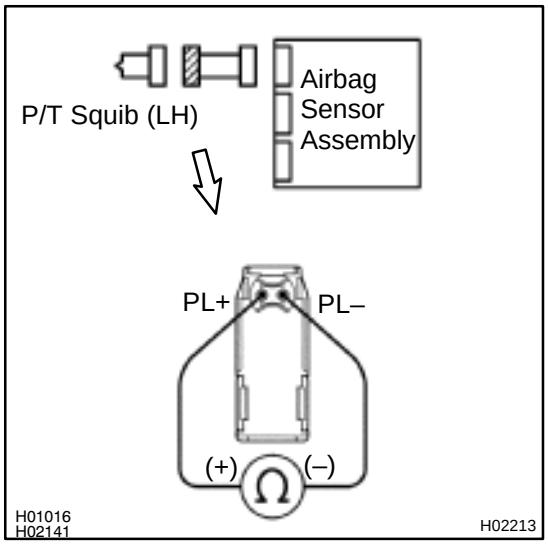

CHECK:

For the connector (on the seat belt pretensioner side) between the seat belt pretensioner (LH) and the airbag sensor assembly, measure the resistance between PL+ and PL–.

OK:

Resistance: Below 1 Ω

NG → **Repair or replace harness or connector between seat belt pretensioner (LH) and airbag sensor assembly.**

OK

3	Check airbag sensor assembly.

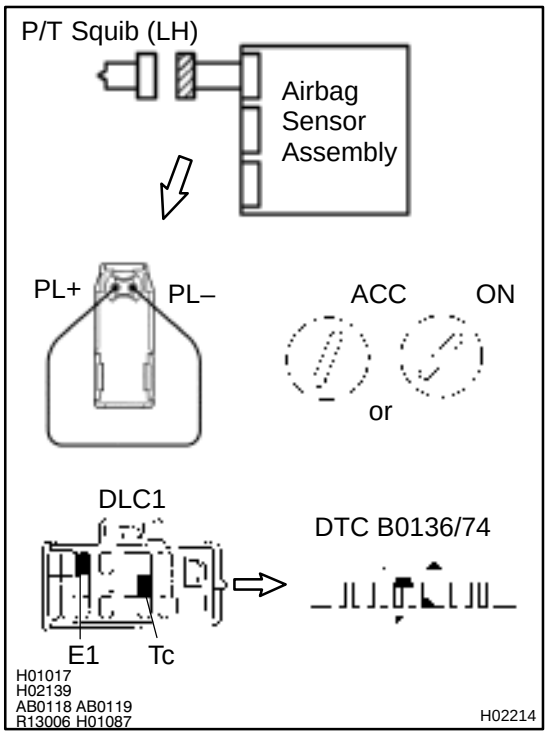

PREPARATION:

(a) Connect the connector to the airbag sensor assembly.
(b) Using a service wire, connect PL+ and PL– of the connector (on the seat belt pretensioner side) between the seat belt pretensioner (LH) and the airbag sensor assembly.
(c) Connect negative (–) terminal cable to the battery, and wait at least for 2 seconds.

CHECK:

(a) Turn ignition switch to ACC or ON and wait at least for 20 seconds.
(b) Clear DTC stored in memory.
(See page DI–626)
(c) Turn ignition switch to LOCK, and wait at least for 20 seconds.
(d) Turn ignition switch to ACC or ON, and wait at least for 20 seconds.
(e) Check DTC.
(See page DI–626)

OK:

DTC B0136/74 is not output.

HINT:
Codes other than code B0136/74 may be output at this time, but they are not relevant to this check.

NG → **Replace airbag sensor assembly.**

OK

4	Check P/T squib (LH).

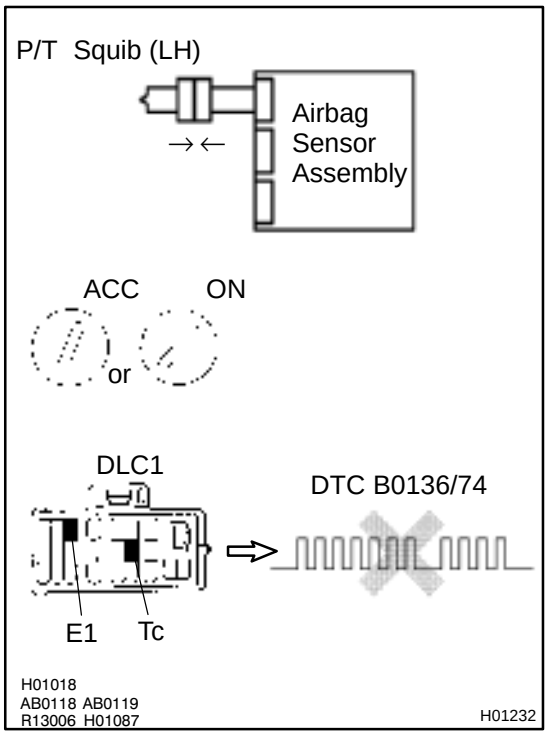

PREPARATION:

(a) Turn ignition switch to LOCK.
(b) Disconnect negative (–) terminal cable from the battery, and wait at least for 90 seconds.
(c) Connect the seat belt pretensioner (LH) connector.
(d) Connect negative (–) terminal cable to the battery, and wait at least for 2 seconds.

CHECK:

(a) Turn ignition switch to ACC or ON, and wait at least for 20 seconds.
(b) Clear DTC stored in memory.
(See page DI–626)
(c) Turn ignition switch to LOCK, and wait at least for 20 seconds.
(d) Turn ignition switch to ACC or ON, and wait at least for 20 seconds.
(e) Check DTC.
(See page DI–626)

OK:

DTC B0136/74 is not output.

HINT:
Codes other than code B0136/74 may be output at this time, but they are not relevant to this check.

NG → **Replace seat belt pretensioner (LH).**

OK

From the results of the above inspection, the malfunctioning part can now be considered normal. To make sure of this, use the simulation method to check.

DTC	B0137/71	Short in P/T Squib (LH) Circuit (to Ground)

CIRCUIT DESCRIPTION

The P/T squib (LH) circuit consists of the airbag sensor assembly and seat belt pretensioner (LH).
It causes the SRS to deploy when the SRS deployment conditions are satisfied.
For details of the function of each component, see OPERATION on page RS–2.
DTC B0137/71 is recorded when a ground short is detected in the P/T squib (LH) circuit.

DTC No.	DTC Detecting Condition	Trouble Area
B0137/71	●Short circuit in P/T squib (LH) wire harness (to ground) ●P/T squib (LH) malfunction ●Airbag sensor assembly malfunction	●Seat belt pretensioner (LH) ●Airbag sensor assembly ●Wire harness

WIRING DIAGRAM

See page DI–743.

INSPECTION PROCEDURE

1	**Prepare for inspection. (See step 1 on page DI–787)**

2	**Check P/T squib (LH) circuit.**

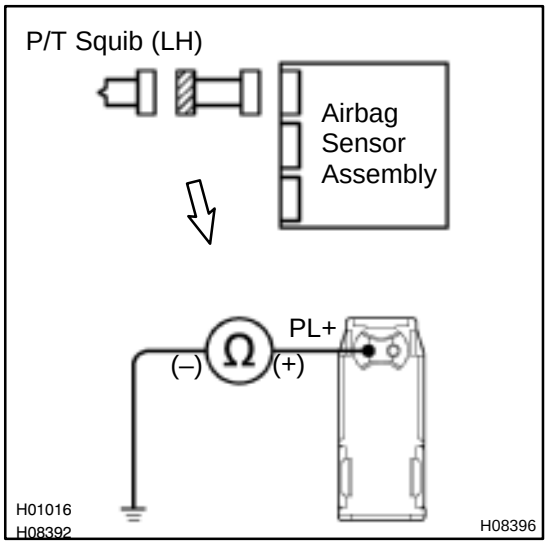

CHECK:

For the connector (on the seat belt pretensioner side) between the seat belt pretensioner (LH) and the airbag sensor assembly, measure the resistance between PL+ and body ground.

OK:

Resistance: 1 MΩ or Higher

NG → **Repair or replace harness or connector between seat belt pretensioner (LH) and airbag sensor assembly.**

OK

3	Check airbag sensor assembly.

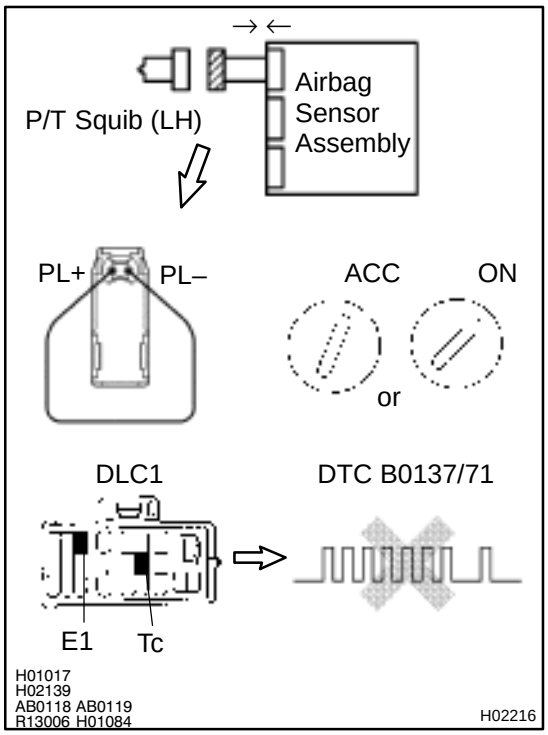

PREPARATION:

(a) Connect the connector to the airbag sensor assembly.

(b) Using a service wire, connect PL+ and PL– of the connector (on the seat belt pretensioner side) between the seat belt pretensioner (LH) and the airbag sensor assembly.

(c) Connect negative (–) terminal cable to the battery, and wait at least for 2 seconds.

CHECK:

(a) Turn ignition switch to ACC or ON and wait at least for 20 seconds.

(b) Clear DTC stored in memory.
(See step 5 on page DI–626)

(c) Turn ignition switch to LOCK, and wait at least for 20 seconds.

(d) Turn ignition switch to ACC or ON, and wait at least for 20 seconds.

(e) Check DTC.
(See page DI–626)

OK:

DTC B0137/71 is not output.

HINT:

Codes other than code B0137/71 may be output at this time, but they are not relevant to this check.

NG → **Replace airbag sensor assembly.**

OK

4	Check P/T squib (LH).

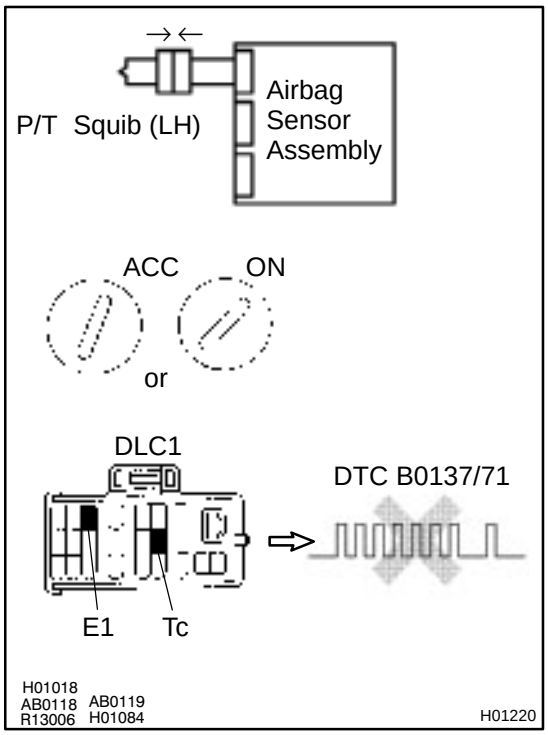

PREPARATION:

(a) Turn ignition switch to LOCK.
(b) Disconnect negative (–) terminal cable from the battery, and wait at least for 90 seconds.
(c) Connect the seat belt pretensioner (LH) connector.
(d) Connect negative (–) terminal cable to the battery, and wait at least for 2 seconds.

CHECK:

(a) Turn ignition switch to ACC or ON, and wait at least for 20 seconds.
(b) Clear DTC stored in memory.
(See step 5 on page DI–626)
(c) Turn ignition switch to LOCK, and wait at least for 20 seconds.
(d) Turn ignition switch to ACC or ON, and wait at least for 20 seconds.
(e) Check DTC.
(See page DI–626)

OK:

DTC B0137/71 is not output.

HINT:
Codes other than code B0137/71 may be output at this time, but they are not relevant to this check.

NG	Replace seat belt pretensioner (LH).

OK

From the results of the above inspection, the malfunctioning part can now be considered normal. To make sure of this, use the simulation method to check. If the malfunctioning part can not be detected by the simulation method, replace all SRS components including the wire harness.

DI1BL–14

DTC	B0138/72	Short in P/T Squib (LH) Circuit (to B+)

CIRCUIT DESCRIPTION

The P/T squib (LH) circuit consists of the airbag sensor assembly and seat belt pretensioner (LH).
It causes the SRS to deploy when the SRS deployment conditions are satisfied.
For details of the function of each component, see OPERATION on page RS–2.
DTC B0138/72 is recorded when a B+ short is detected in the P/T squib (LH) circuit.

DTC No.	DTC Detecting Condition	Trouble Area
B0138/72	●Short circuit in seat belt pretensioner (LH) wire harness (to B+) ●P/T squib (LH) malfunction ●Airbag sensor assembly malfunction	●Seat belt pretensioner (LH) ●Airbag sensor assembly ●Wire harness

WIRING DIAGRAM

See page DI–743.

INSPECTION PROCEDURE

1	**Prepare for inspection. (See step 1 on page DI–787)**

2	**Check P/T squib (LH) circuit.**

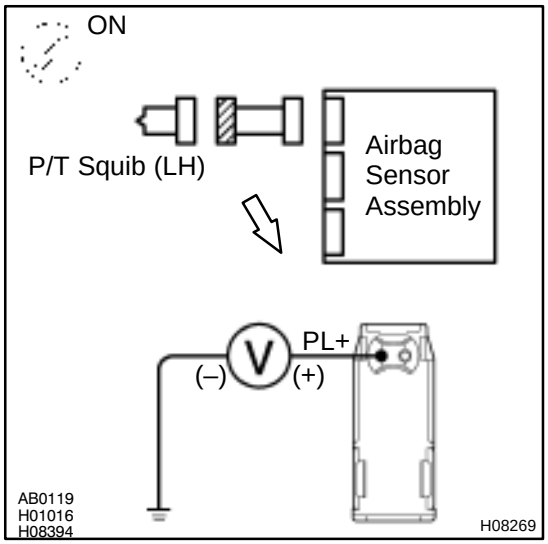

CHECK:

(a) Turn ignition switch to ON.

(b) For the connector (on the seat belt pretensioner side) between the seat belt pretensioner (LH) and the airbag sensor assembly, measure the voltage between PL+ and body ground.

OK:

Voltage: 0 V

NG → **Repair or replace harness or connector between seat belt pretensioner (LH) and airbag sensor assembly.**

OK

3	Check airbag sensor assembly.

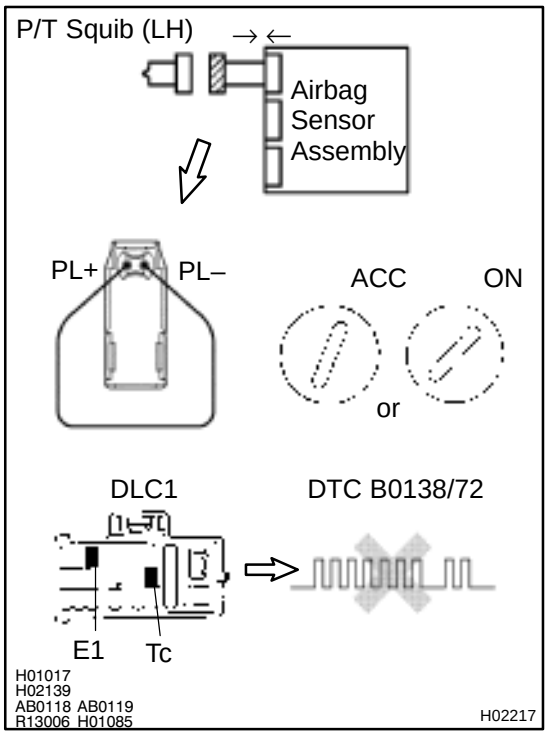

PREPARATION:

(a) Connect the connector to the airbag sensor assembly.
(b) Using a service wire, connect PL+ and PL– of the connector (on the seat belt pretensioner side) between the seat belt pretensioner (LH) and the airbag sensor assembly.
(c) Connect negative (–) terminal cable to the battery, and wait at least for 2 seconds.

CHECK:

(a) Turn ignition switch to ACC or ON and wait at least for 20 seconds.
(b) Clear DTC stored in memory.
(See step 5 on page DI–626)
(c) Turn ignition switch to LOCK, and wait at least for 20 seconds.
(d) Turn ignition switch to ACC or ON, and wait at least for 20 seconds.
(e) Check DTC.
(See page DI–626)

OK:

DTC B0138/72 is not output.

HINT:
Codes other than code B0138/72 may be output at this time, but they are not relevant to this check.

NG → **Replace airbag sensor assembly.**

OK

4	Check P/T squib (LH).

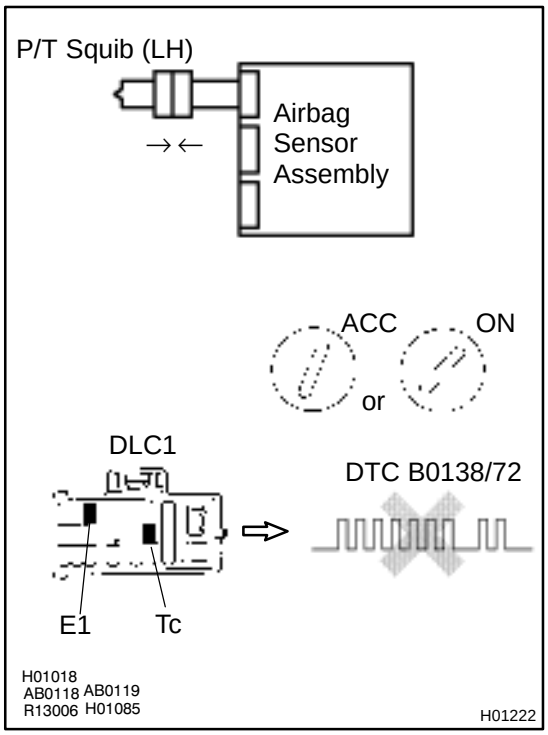

PREPARATION:

(a) Turn ignition switch to LOCK.
(b) Disconnect negative (–) terminal cable from the battery, and wait at least for 90 seconds.
(c) Connect the seat belt pretensioner (LH) connector.
(d) Connect negative (–) terminal cable to the battery, and wait at least for 2 seconds.

CHECK:

(a) Turn ignition switch to ACC or ON, and wait at least for 20 seconds.
(b) Clear DTC stored in memory.
(See step 5 on page DI–626)
(c) Turn ignition switch to LOCK, and wait at least for 20 seconds.
(d) Turn ignition switch to ACC or ON, and wait at least for 20 seconds.
(e) Check DTC.
(See page DI–626)

OK:

DTC B0138/72 is not output.

HINT:
Codes other than code B0138/72 may be output at this time, but they are not relevant to this check.

NG → **Replace seat belt pretensioner (LH).**

OK →

From the results of the above inspection, the malfunctioning part can now be considered normal. To make sure of this, use the simulation method to check. If the malfunctioning part can not be detected by the simulation method, replace all SRS components including the wire harness.

DTC	B1100/31	Airbag Sensor Assembly Malfunction

CIRCUIT DESCRIPTION

The airbag sensor assembly consists of a airbag sensor, safing sensor, drive circuit, diagnosis circuit and ignition control, etc.
It receives signals from the airbag sensor, judges whether or not the SRS must be activated, and detects diagnosis system malfunction.
DTC B1100/31 is recorded when occurrence of a malfunction in the airbag sensor assembly is detected.

DTC No.	DTC Detecting Condition	Trouble Area
B1100/31	●Airbag sensor assembly malfunction	●Airbag sensor assembly

INSPECTION PROCEDURE

HINT:
When a malfunction code other than code B1100/31 is displayed at the same time, first repair the malfunction indicated by the malfunction code other than code B1100/31.

1	**Prepare for inspection. (See step 1 on page DI–787)**

2	**Check voltage at IG2 and ACC of airbag sensor assembly.**

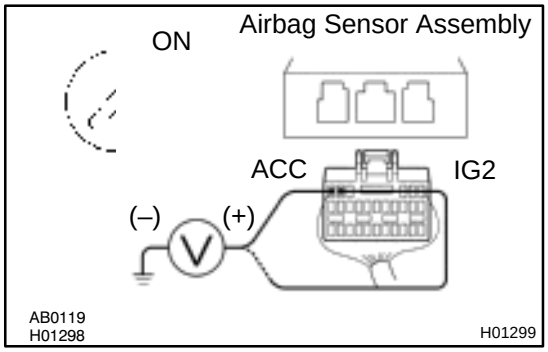

CHECK:

(a) Turn ignition switch to ON.
(b) Measure the voltage between body ground and terminals each of IG2 and ACC of the airbag sensor assembly connector.

OK:

Voltage: 10 – 14 V

NG → **Check that an abnormality occurs on the battery and charging system.**

OK

3	Is DTC B1100/31 output again?

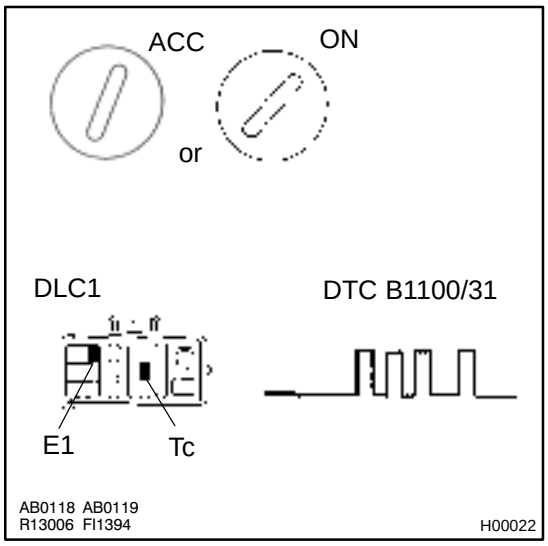

PREPARATION:

Clear DTC.

(See step 5 on page DI–626)

CHECK:

(a) Turn ignition switch to LOCK, and wait at least for 20 seconds.

(b) Turn ignition switch to ACC or ON, and wait at least for 20 seconds.

(c) Repeat operation in step (a) and (b) at least 5 times.

(d) Check DTC.
(See page DI–626)

HINT:

Codes other than code B1100/31 may be output at this time, but they are not relevant to this check.

NO → **Using simulation method, reproduce malfunction symptoms. (See page IN–21)**

YES

Replace airbag sensor assembly.

DI4L8–01

DTC	B1140/32	Side Airbag Sensor Assembly (RH) Malfunction

CIRCUIT DESCRIPTION

The side airbag sensor assembly (RH) consists of the safing sensor, diagnosis circuit and lateral deceleration sensor, etc.
It receives signals from the lateral deceleration sensor, judges whether or not the SRS must be activated, and diagnosis system malfunction.
DTC B1140/32 is recorded when occurrence of a malfunction in the side airbag sensor assembly (RH) is detected.

DTC No.	DTC Detecting Condition	Trouble Area
B1140/32	●Side airbag sensor assembly (RH) malfunction	●Side airbag sensor assembly (RH) ●Wire harness ●Airbag sensor assembly

WIRING DIAGRAM

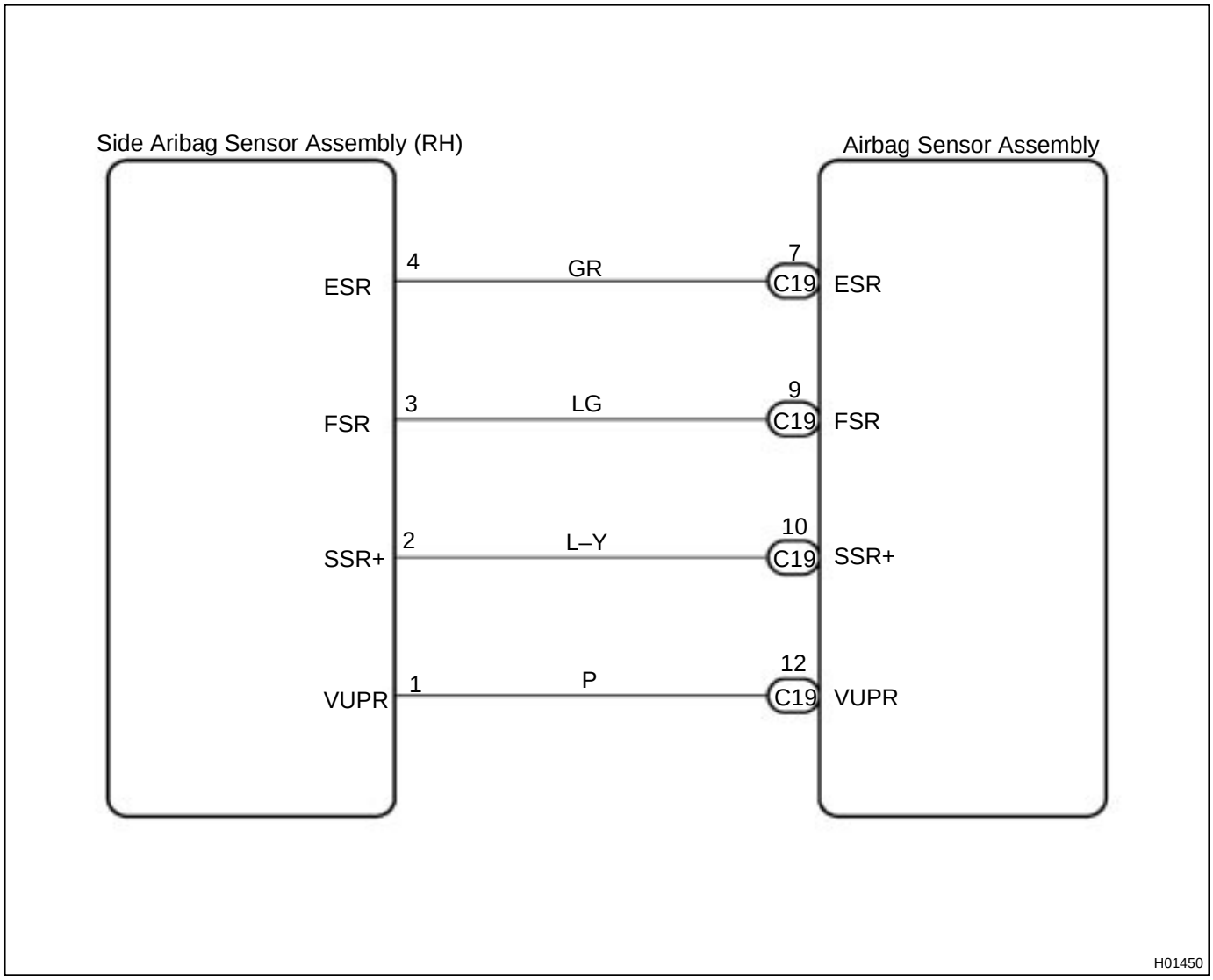

INSPECTION PROCEDURE

1	**Is DTC B1140/32 out put?**

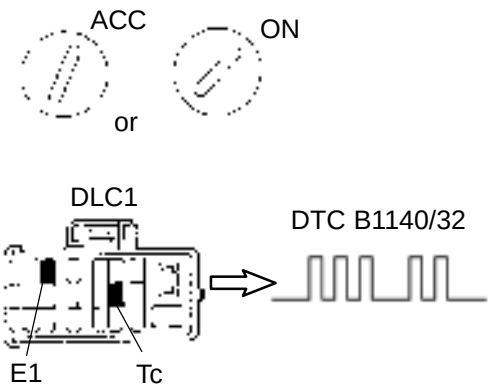

CHECK:

(a) Turn ignition switch to ACC or ON, and wait at least for 20 seconds.
(b) Clear DTC stored in memory.
(See page DI–626)
(c) Turn ignition switch to LOCK, and wait at least for 20 seconds.
(d) Turn ignition switch to ACC or ON, and wait at least for 20 seconds.
(e) Check DTC.
(See page DI–626)

HINT:
Codes other than code B1140/32 may be output at this time, but they are not relevant to this check.

YES → **The malfunctioning part can now be considered normal. To make sure of this, use the simulation method to check.**

NO

2	**Is connector of side airbag sensor assembly (RH) properly connected?**

3	**Prepare for inspection. (See step 1 on DI–787)**

4	**Check wire harness.**

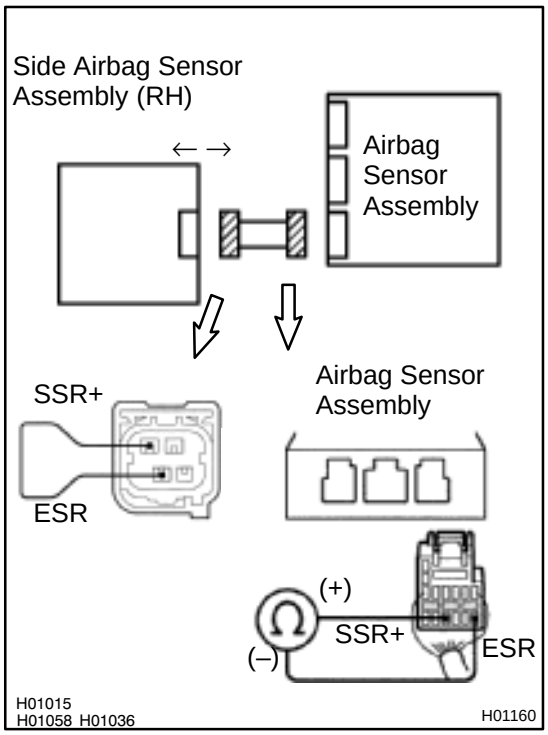

PREPARATION:

(a) Disconnect the side airbag sensor assembly (RH) connector.

(b) Using a service wire, connect SSR+ and ESR of the connector (on the side airbag sensor assembly side) between the side airbag sensor assembly (RH) and airbag sensor assembly.

CHECK:

For the connector (on the airbag sensor assembly side) between the side airbag sensor assembly (RH) and the airbag sensor assembly, measure the resistance between SSR+ and ESR.

OK:

Resistance: Below 1 Ω

NG → **Repair or replace harness or connector between side airbag sensor assembly (RH) and airbag sensor assembly.**

OK

5	Check wire harness.

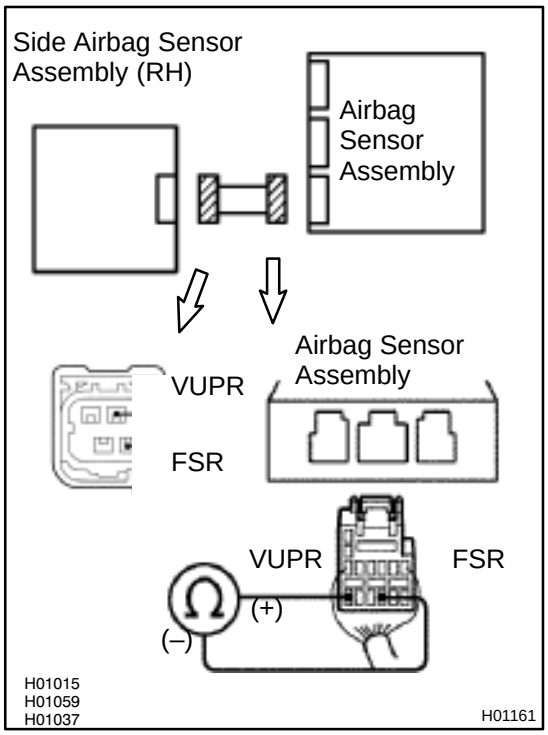

PREPARATION:

Using a service wire, connect VUPR and FSR of the connector (on the side airbag sensor assembly side) between the side airbag sensor assembly (RH) and airbag sensor assembly.

CHECK:

For the connector (on the airbag sensor assembly side) between the side airbag sensor assembly (RH) and the airbag sensor assembly, measure the resistance between VUPR and FSR.

OK:

Resistance: Below 1 Ω

NG → **Repair or replace harness or connector between side airbag sensor assembly (RH) and airbag sensor assembly.**

OK

6	Check wire harness (to ground).

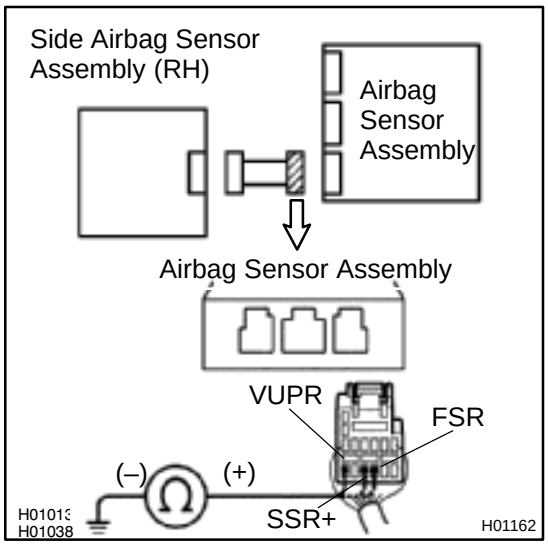

CHECK:

For the connector (on the airbag sensor assembly side) between the side airbag sensor assembly (RH) and the airbag sensor assembly, measure the resistance between body ground and each of SSR+, VUPR and FSR.

OK:

Resistance: Below 1 Ω

NG → **Repair or replace harness or connector between side airbag sensor assembly (RH) and airbag sensor assembly.**

OK

7	Check wire harness (to B+).

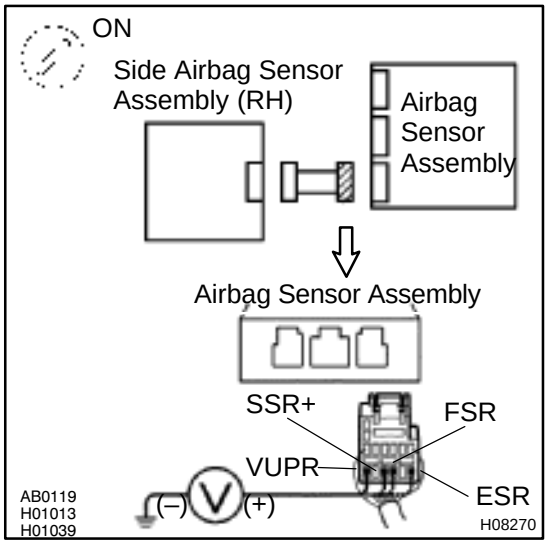

CHECK:

(a) Turn ignition switch to ON.

(b) For the connector (on the airbag sensor assembly side) between the side airbag sensor assembly (RH) and the airbag sensor assembly, measure the voltage between the body ground and each of SSR+, VUPR, ESR and FSR.

OK:

Voltage: 0 V

NG → **Repair or replace harness or connector between side airbag sensor assembly (RH) and airbag sensor assembly.**

OK

8	Is DTC B1140/32 out put again?

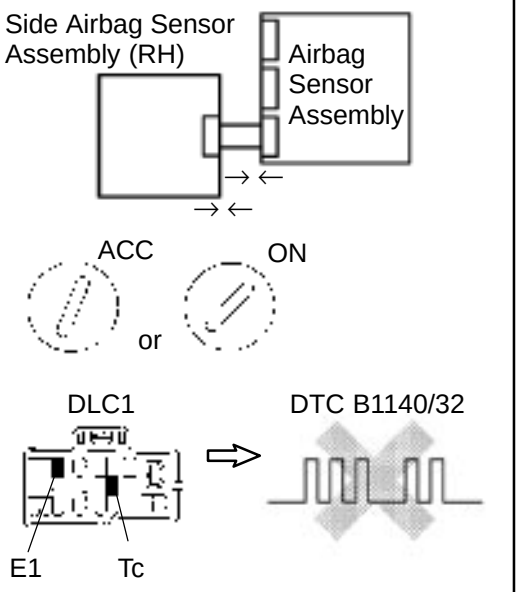

PREPARATION:

(a) Connect the connector to the side airbag sensor assembly (RH).
(b) Connect the connector to the airbag sensor assembly.
(c) Connect negative (–) terminal cable to the battery, and wait at least for 2 seconds.

CHECK:

(a) Turn ignition switch to ACC or ON, and wait at least for 20 seconds.
(b) Clear DTC stored in memory.
(See step 5 on page DI–626)
(c) Turn ignition switch to LOCK, and wait at least for 20 seconds.
(d) Turn ignition switch to ACC or ON, and wait at least for 20 seconds.
(e) Check DTC.
(See page DI–626)

OK:

DTC B1140/32 is not output.

HINT:
Codes other than code B1140/32 may be output at this time, but they are not relevant to this check.

NG	Go to step 9.

OK

From the results of the above inspection, the malfunctioning part can now be considered normal. To make sure of this, use the simulation method to check.

9	Check airbag sensor assembly.

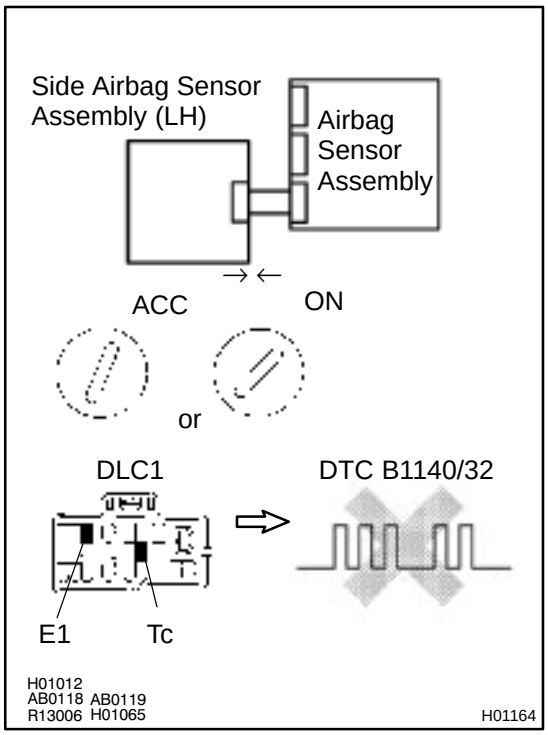

PREPARATION:

(a) Turn ignition switch to LOCK.

(b) Disconnect negative (–) terminal cable from the battery, and wait at least for 90 seconds.

(c) Disconnect the side airbag sensor (RH) from the connector and connect the side airbag sensor (LH) to the connector.

(d) Connect negative (–) terminal cable to the battery, and wait at least for 2 seconds.

CHECK:

(a) Turn ignition switch to ACC or ON, and wait at least for 20 seconds.

(b) Clear DTC stored in memory.
(See step 5 on page DI–626)

(c) Turn ignition switch to LOCK, and wait at least for 20 seconds.

(d) Turn ignition switch to ACC or ON, and wait at least for 20 seconds.

(e) Check DTC.
(See page DI–626)

OK:

DTC B1140/32 is not output.

HINT:

Codes other than code B1140/32 may be output at this time, but they are not relevant to this check.

NG	Replace airbag sensor assembly.

OK

10	Check side airbag sensor assembly (RH).

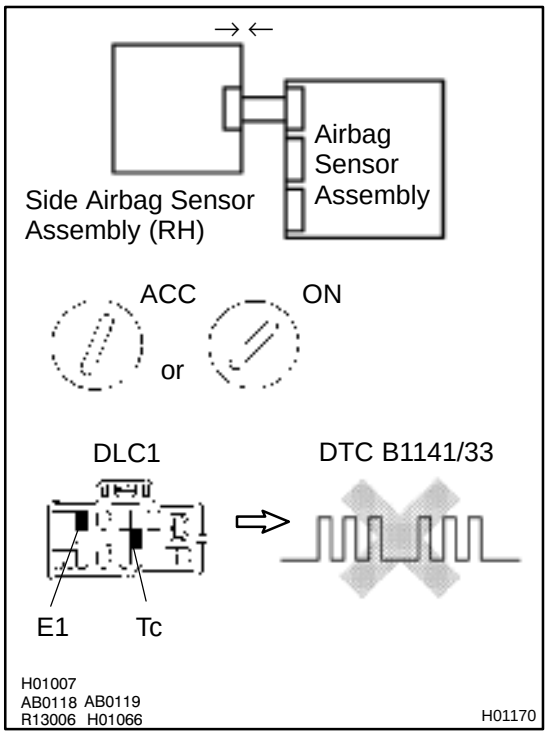

PREPARATION:

(a) Turn ignition switch to LOCK.
(b) Disconnect negative (–) terminal cable from the battery, and wait at least for 90 seconds.
(c) Connect the side airbag sensor (RH) to the connector that the side airbag sensor (LH) was connected to.
(d) Connect negative (–) terminal cable to the battery, and wait at least for 2 seconds.

CHECK:

(a) Turn ignition switch to ACC or ON, and wait at least for 20 seconds.
(b) Clear DTC stored in memory.
(See page DI–626)
(c) Turn ignition switch to LOCK, and wait at least for 20 seconds.
(d) Turn ignition switch to ACC or ON, and wait at least for 20 seconds.
(e) Check DTC.
(See page DI–626)

OK:

DTC B1141/33 is not output.

HINT:
Codes other than code B1141/33 may be output at this time, but they are not relevant to this check.

NG	Replace side airbag sensor assembly (RH).

OK

From the results of the above inspection, the malfunctioning part can now be considered normal. To make sure of this, use the simulation method to check.

DI4L9–01

DTC	B1141/33	Side Airbag Sensor Assembly (LH) Malfunction

CIRCUIT DESCRIPTION

The side airbag sensor assembly (LH) consists of the safing sensor, diagnosis circuit and lateral deceleration sensor, etc.
It receives signals from the lateral deceleration sensor, judges whether or not the SRS must be activated, and diagnosis system malfunction.
DTC B1141/33 is recorded when occurrence of a malfunction in the side airbag sensor assembly (LH) is detected.

DTC No.	DTC Detecting Condition	Trouble Area
B1141/33	●Side airbag sensor assembly (LH) malfunction	●Side airbag sensor assembly (LH) ●Wire harness ●Airbag sensor assembly

WIRING DIAGRAM

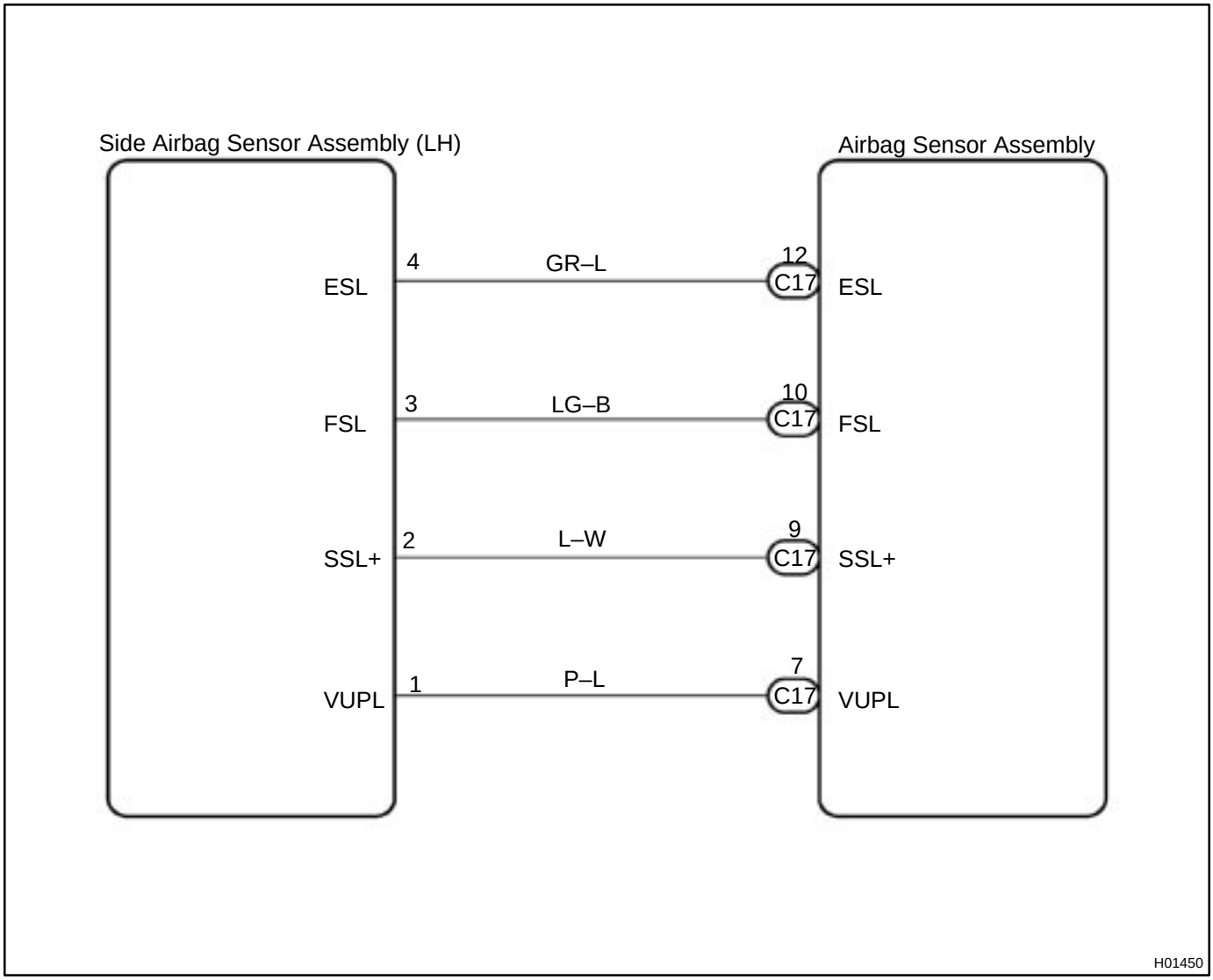

INSPECTION PROCEDURE

1	**Is DTC B1141/33 out put?**

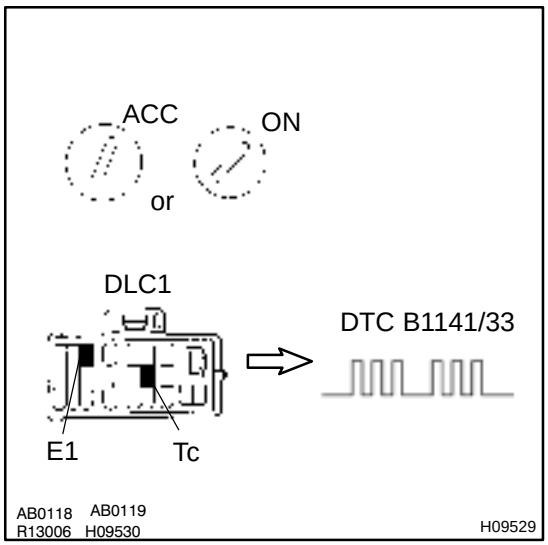

CHECK:

(a) Turn ignition switch to ACC or ON, and wait at least for 20 seconds.
(b) Clear DTC stored in memory.
(See step 5 on page DI–626)
(c) Turn ignition switch to LOCK, and wait at least for 20 seconds.
(d) Turn ignition switch to ACC or ON, and wait at least for 20 seconds.
(e) Check DTC.
(See page DI–626)

HINT:
Codes other than code B1141/33 may be output at this time, but they are not relevant to this check.

YES → **The malfunctioning part can now be considered normal. To make sure of this, use the simulation method to check.**

NO

2	**Is connector of side airbag sensor assembly (LH) properly connected?**

3	**Prepare for inspection. (See step 1 on page DI–787)**

4	Check wire harness.

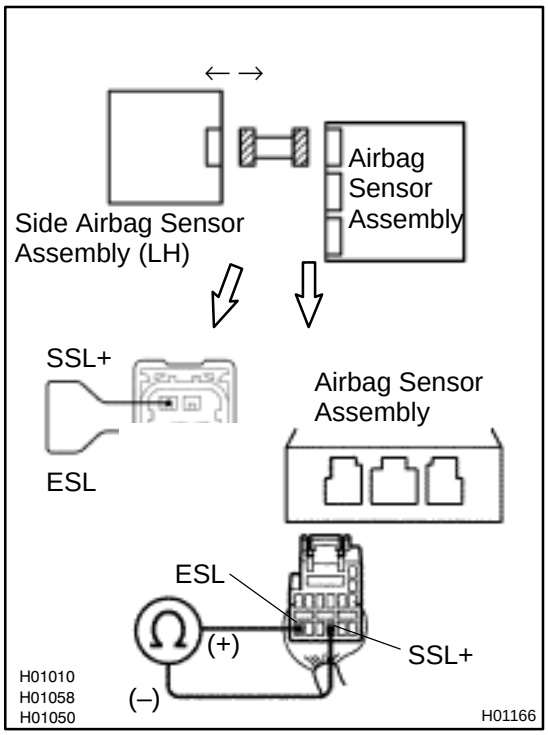

PREPARATION:

(a) Disconnect the side airbag sensor assembly (LH).

(b) Using a service wire, connect SSL+ and ESL of the connector (on the side airbag sensor assembly side) between the side airbag sensor assembly (LH) and the airbag sensor assembly.

CHECK:

For the connector (on the airbag sensor assembly side) between the side airbag sensor assembly (LH) and the airbag sensor assembly, measure the resistance between SSL+ and ESL.

OK:

Resistance: Below 1 Ω

NG → **Repair or replace harness or connector between side airbag sensor assembly (LH) and airbag sensor assembly.**

OK

5	**Check wire harness.**

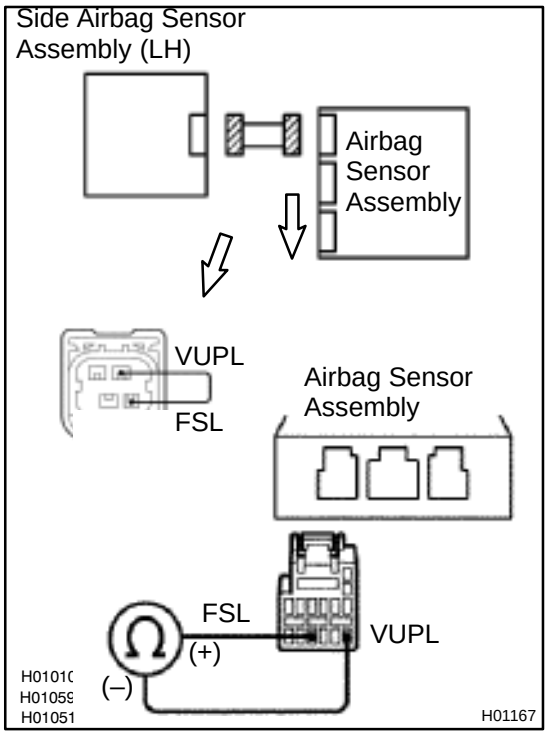

PREPARATION:

Using a service wire, connect VUPL and FSL of the connector (on the side airbag sensor assembly side) between the side airbag sensor assembly (LH) and the airbag sensor assembly.

CHECK:

For the connector (on the airbag sensor assembly side) between the side airbag sensor assembly (LH) and the airbag sensor assembly, measure the resistance between VUPL and FSL.

OK:

Resistance: Below 1 Ω

NG → **Repair or replace harness or connector between side airbag sensor assembly (LH) and airbag sensor assembly.**

OK

6	Check wire harness (to ground).

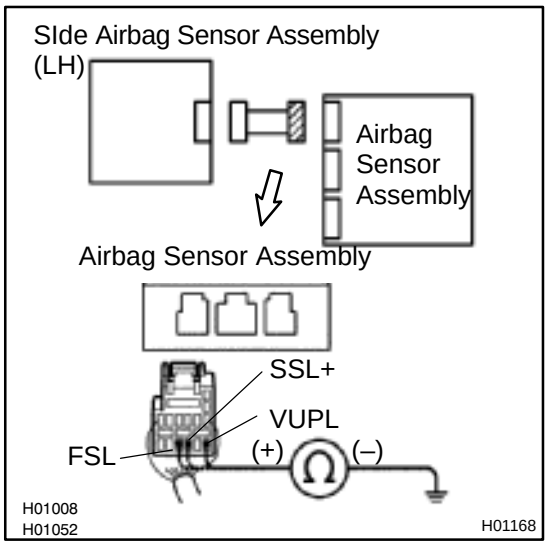

CHECK:

For the connector (on the airbag sensor assembly side) between the side airbag sensor assembly (LH) and the airbag sensor assembly, measure the resistance between body ground and each of SSL+, VUPL and FSL.

OK:

Resistance: 1 MΩ or Higher

NG → **Repair or replace harness or connector between side airbag sensor assembly (LH) and airbag sensor assembly.**

OK

7	Check wire harness (to B+).

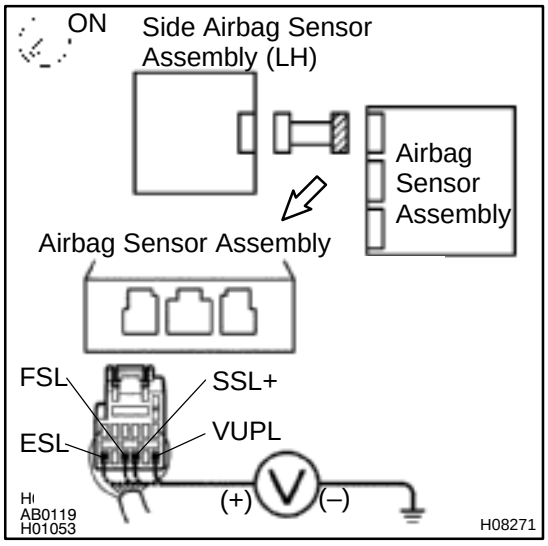

CHECK:

(a) Turn ignition switch to ON.

(b) For the connector (on the airbag sensor assembly side) between the side airbag sensor assembly (LH) and the airbag sensor assembly, measure the voltage between body ground and each of SSL+, ESL, VUPL and FSL.

OK:

Voltage: 0 V

NG → **Repair or replace harness or connector between side airbag sensor assembly (LH) and airbag sensor assembly.**

OK

8	Is DTC B1141/33 out put again?

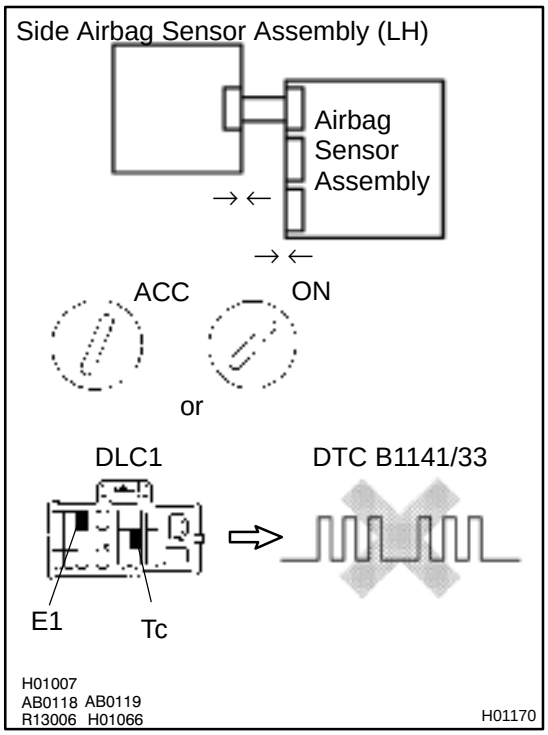

PREPARATION:

(a) Connect the connector to the side airbag sensor assembly (LH).
(b) Connect the connector to the airbag sensor assembly.
(c) Connect negative (–) terminal cable to the battery, and wait at least for 2 seconds.

CHECK:

(a) Turn ignition switch to ACC or ON, and wait at least for 20 seconds.
(b) Clear DTC stored in memory.
(See step 5 on page DI–626)
(c) Turn ignition switch to LOCK, and wait at least for 20 seconds.
(d) Turn ignition switch to ACC or ON, and wait at least for 20 seconds.
(e) Check DTC.
(See page DI–626)

OK:

DTC B1141/33 is not output.

HINT:
Codes other than code B1141/33 may be output at this time, but they are not relevant to this check.

NO	Go to step 9.

YES

From the results of the above inspection, the malfunctioning part can now be considered normal. To make sure of this, use the simulation method to check.

9	Check airbag sensor assembly.

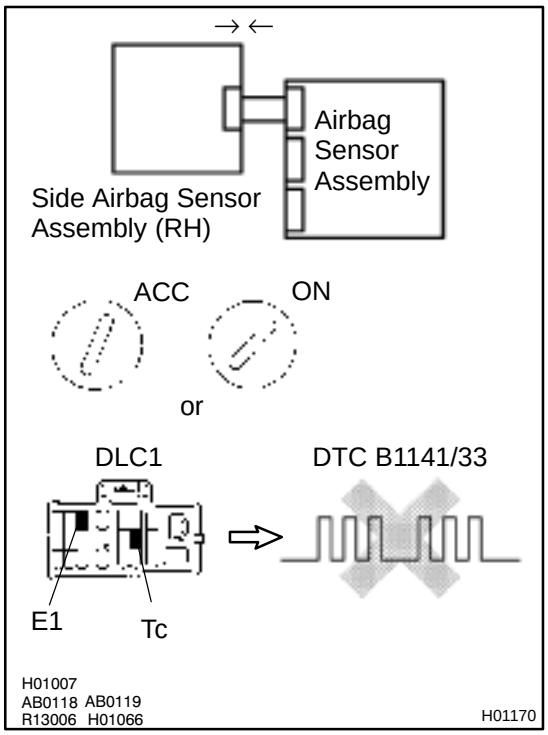

PREPARATION:

(a) Turn ignition switch to LOCK.
(b) Disconnect negative (–) terminal cable from the battery, and wait at least for 90 seconds.
(c) Disconnect the side airbag sensor (LH) from the connector and connect the side airbag sensor (RH) to the connector.
(d) Connect negative (–) terminal cable to the battery, and wait at least for 2 seconds.

CHECK:

(a) Turn ignition switch to ACC or ON, and wait at least for 20 seconds.
(b) Clear DTC stored in memory.
(See step 5 on page DI–626)
(c) Turn ignition switch to LOCK, and wait at least for 20 seconds.
(d) Turn ignition switch to ACC or ON, and wait at least for 20 seconds.
(e) Check DTC.
(See page DI–626)

OK:

DTC B1141/33 is not output.

HINT:
Codes other than code B1141/33 may be output at this time, but they are not relevant to this check.

NG → **Replace airbag sensor assembly.**

OK

10	Check side airbag sensor assembly (LH).

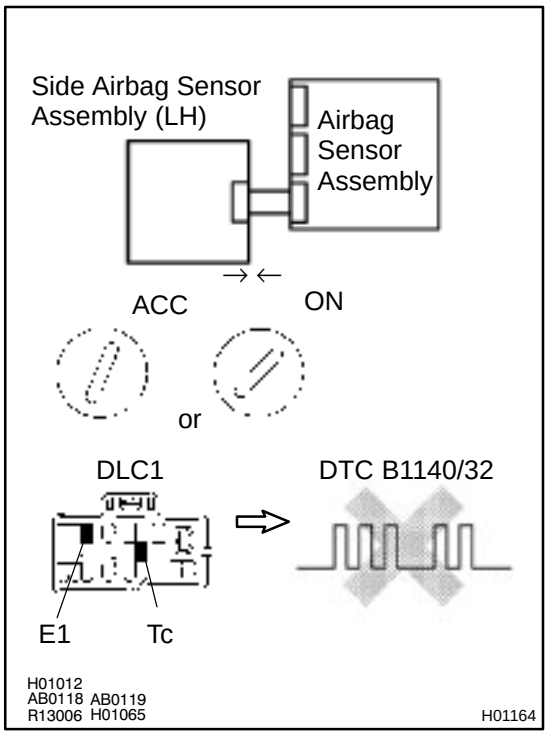

PREPARATION:

(a) Turn ignition switch to LOCK.
(b) Disconnect negative (–) terminal cable from the battery, and wait at least for 90 seconds.
(c) Connect the side airbag sensor (LH) to the connector that the side airbag sensor (RH) was connected to.
(d) Connect negative (–) terminal cable to the battery, and wait at least for 2 seconds.

CHECK:

(a) Turn ignition switch to ACC or ON, and wait at least for 20 seconds.
(b) Clear DTC stored in memory.
(See page DI–626)
(c) Turn ignition switch to LOCK, and wait at least for 20 seconds.
(d) Turn ignition switch to ACC or ON, and wait at least for 20 seconds.
(e) Check DTC.
(See page DI–626)

OK:

DTC B1140/32 is not output.

HINT:
Codes other than code B1140/32 may be output at this time, but they are not relevant to this check.

NG → **Replace side airbag sensor assembly (LH).**

OK →

From the results of the above inspection, the malfunctioning part can now be considered normal. To make sure of this, use the simulation method to check.

DI4LA–01

DTC	B1156/B1157/15	Front Airbag Sensor (RH) Malfunction

CIRCUIT DESCRIPTION

The front airbag sensor (RH) circuit consists of the airbag sensor assembly and front airbag sensor (RH).
For details of the function of each component, see OPERATION on page RS–2.
DTC B1156/B1157/15 is recorded when malfunction is detected in the front airbag sensor (RH) circuit.

DTC No.	DTC Detecting Condition	Trouble Area
B1156/B1157/15	●Front airbag sensor (RH) malfunction	●Front airbag sensor (RH) ●Wire harness ●Engine room main wire harness ●Airbag sensor assembly

WIRING DIAGRAM

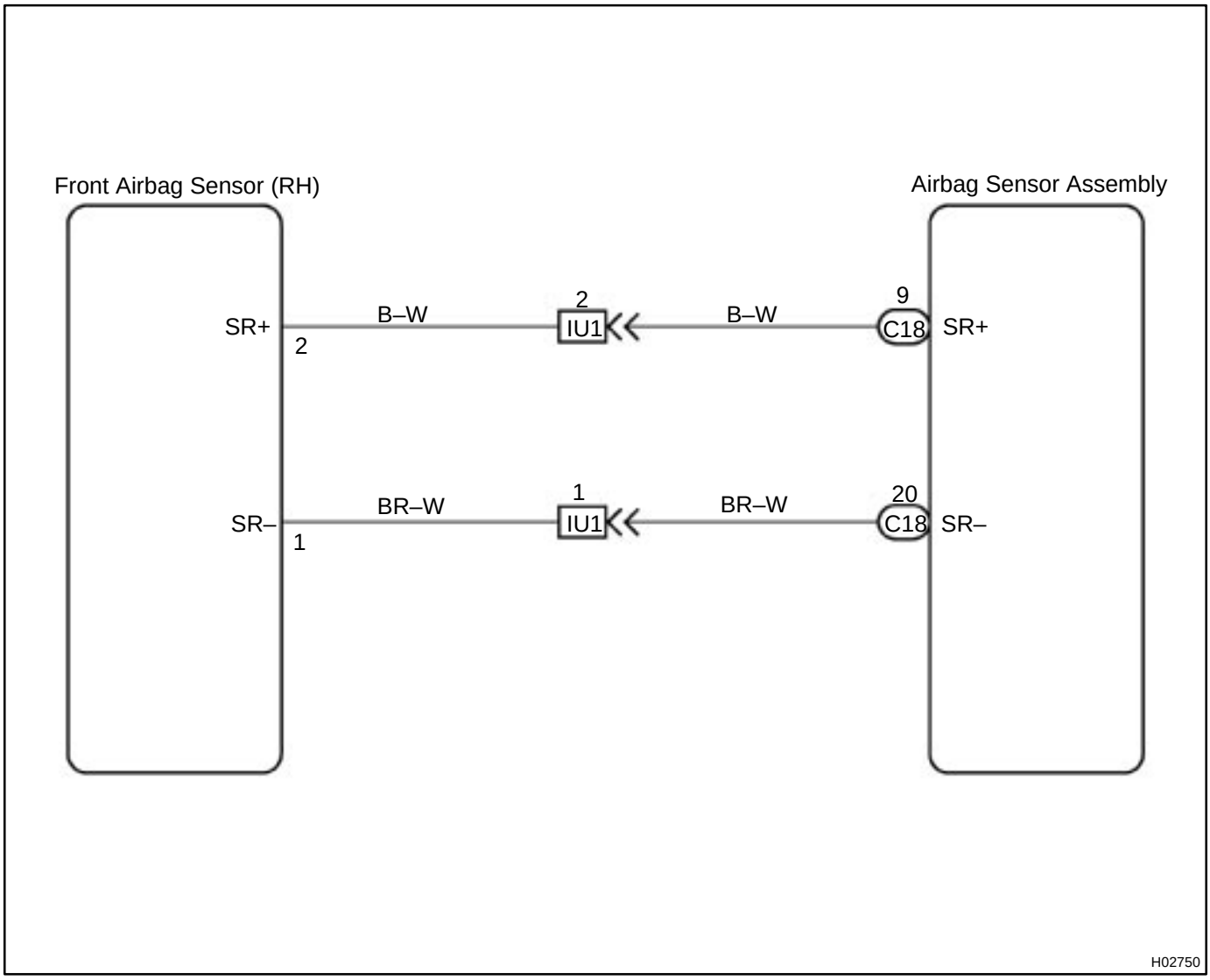

INSPECTION PROCEDURE

1	**Prepare for inspection. (See step 1 on page DI–787)**

2	**Check wire harness (to B+).**

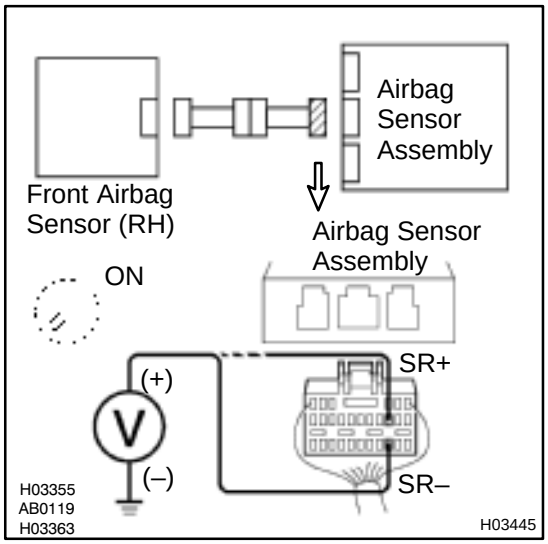

CHECK:

(a) Turn ignition switch to ON.

(b) For the connector (on the airbag sensor assembly side) between the front airbag sensor (RH) and the airbag sensor assembly, measure the voltage between body ground and each of SR+ and SR–.

OK:

Voltage: Below 1 V

NG	**Go to step 8.**

OK

3	**Check wire harness (to ground).**

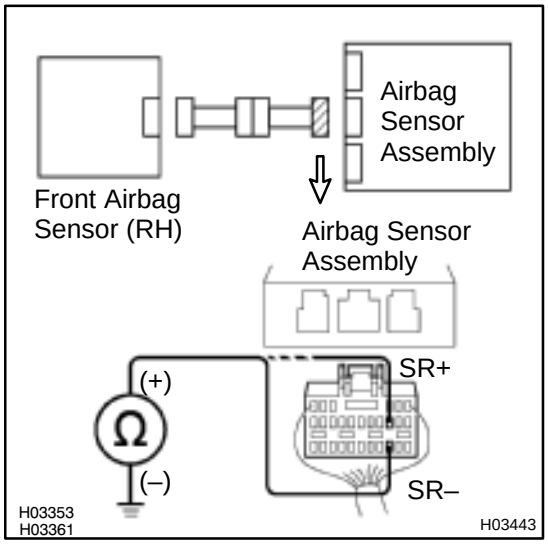

CHECK:

For the connector (on the airbag sensor assembly side) between the front airbag sensor (RH) and the airbag sensor assembly, measure the resistance between body ground and each of SR+ and SR–.

OK:

Resistance: 1 MΩ or Higher

NG	**Go to step 9.**

OK

4	Check wire harness.

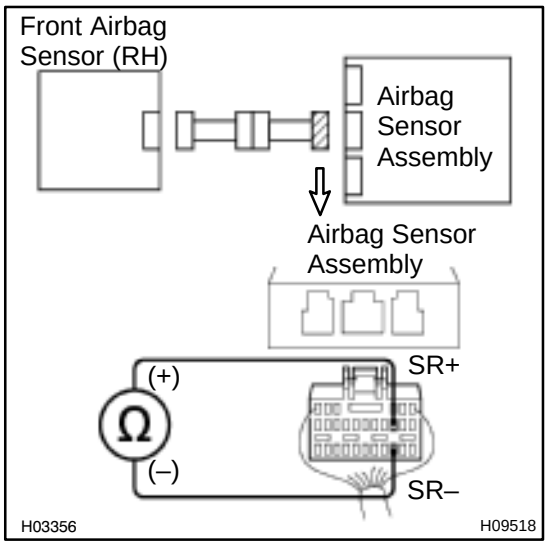

CHECK:

For the connector (on the airbag sensor assembly side) between the front airbag sensor (RH) and the airbag sensor assembly, measure the resistance between SR+ and SR–.

OK:

Resistance: 1 MΩ or Higher

NG → **Go to step 10.**

OK

5	Check wire harness.

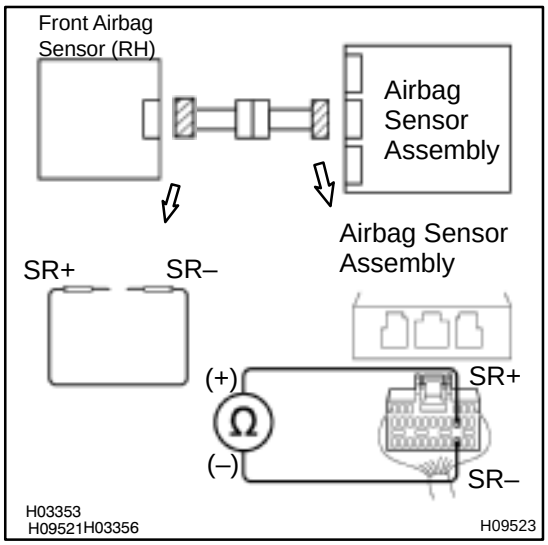

PREPARATION:

Using a service wire, connect SR+ and SR– of the connector (on the front airbag sensor (RH) side) between the airbag sensor assembly and the front airbag sensor (RH).

CHECK:

For the connector (on the airbag sensor assembly side) between the front airbag sensor (RH) and the airbag sensor assembly, measure the resistance between SR+ and SR–.

OK:

Resistance: Below 1 Ω

NG → **Go to step 11.**

OK

6	Check front airbag sensor (RH).

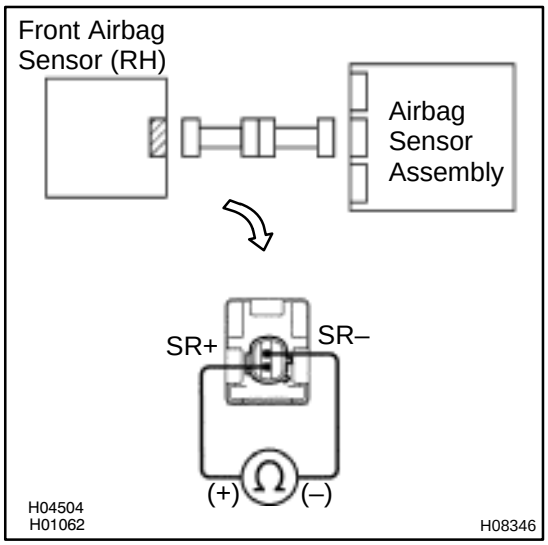

CHECK:

For the connector (on the front airbag sensor (RH)), measure the resistance between SR+ and SR–.

OK:

Resistance: 300 – 1500 Ω

NG → **Replace front airbag sensor (RH).**

OK

7	Check airbag sensor assembly.

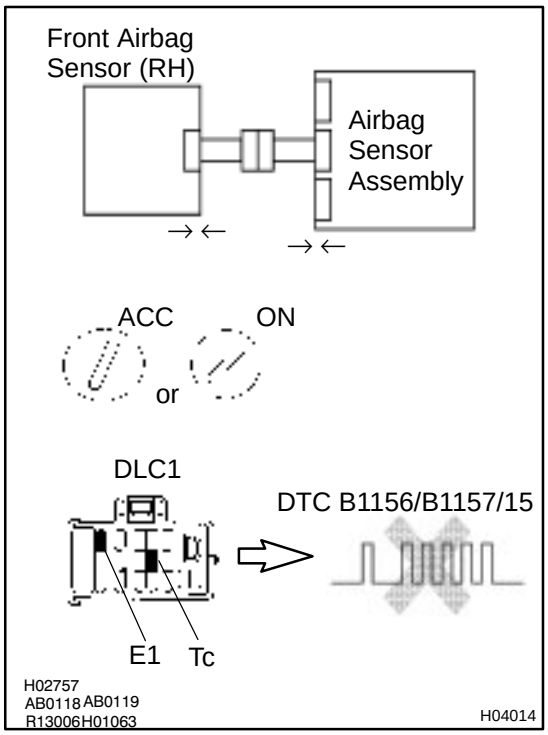

PREPARATION:

(a) Turn ignition switch to LOCK.
(b) Disconnect negative (–) terminal cable from the battery, and wait at least for 90 seconds.
(c) Connect the front airbag sensor (RH) connector and airbag sensor assembly connector.
(d) Connect negative (–) terminal cable to the battery, and wait at least for 2 seconds.

CHECK:

(a) Turn ignition switch to ACC or ON, and wait at least for 20 seconds.
(b) Clear DTC stored in memory.
(See Pub. No. RM572E1 on page DI–95)
(c) Turn ignition switch to LOCK, and wait at least for 20 seconds.
(d) Turn ignition switch to ACC or ON, and wait at least for 20 seconds.
(e) Check DTC.
(See Pub. No. RM572E1 on page DI–95)

OK:

DTC B1156/B1157/15 is not output.

HINT:
Codes other than code B1156/B1157/15 may be output at this time, but they are not relevant to this check.

NG → **Replace airbag sensor assembly.**

OK

From the results of the above inspection, the malfunctioning part can now be considered normal. To make sure of this, use the simulation method to check.

8	Check engine room main wire harness (to B+).

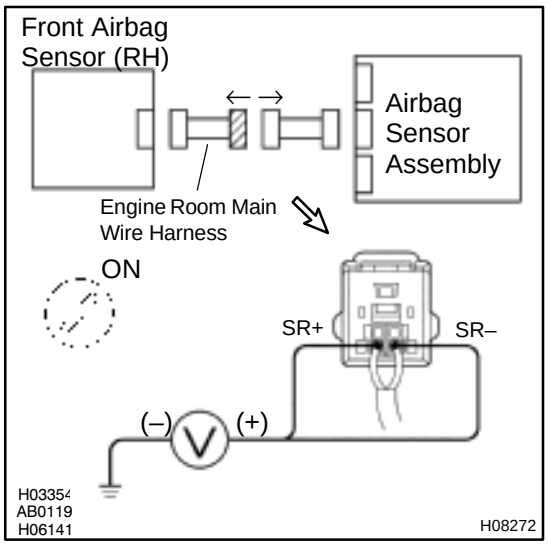

PREPARATION:

Disconnect the engine room main wire harness connector on the airbag sensor assembly side.

CHECK:

(a) Turn ignition switch to ON.

(b) For the connector (on the RH front door wire harness side) between the airbag sensor assembly and the engine room main wire harness, measure the voltage between body ground and each of SR+ and SR–.

OK:

Voltage: Below 1 V

NG → **Repair or replace engine room main wire harness.**

OK

Repair or replace harness or connector between airbag sensor assembly and engine room main wire harness.

9	Check engine room main wire harness (to ground).

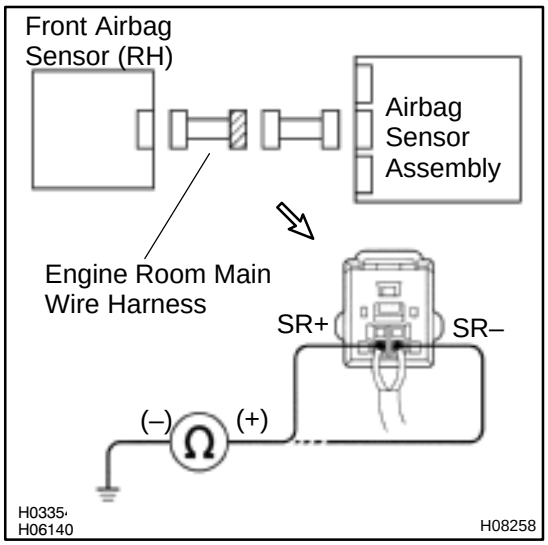

PREPARATION:

Disconnect the engine room main wire harness connector on the airbag sensor assembly side.

CHECK:

For the connector (on the engine room main wire harness side) between the airbag sensor assembly and the engine room main wire harness, measure the resistance between body ground and each of SR+ and SR–.

OK:

Resistance: 1 MΩ or Higher

NG → **Repair or replace engine room main wire harness.**

OK

Repair or replace harness or connector between airbag sensor assembly and engine room main wire harness.

10	Check engine room main wire harness.

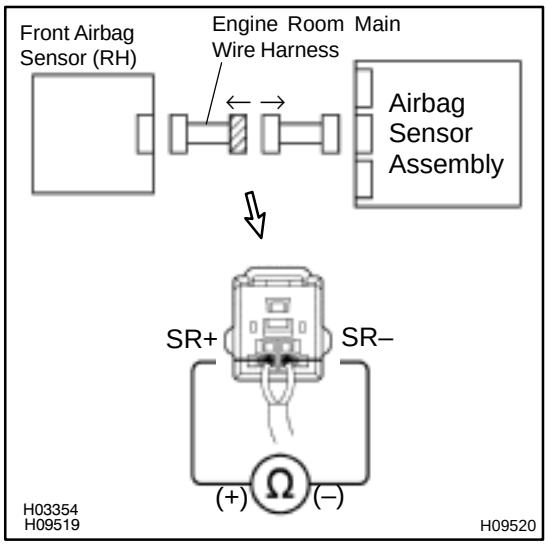

PREPARATION:

Disconnect the engine room main wire harness connector on the airbag sensor assembly side.

CHECK:

For the connector (on the engine room main wire harness side) between the airbag sensor assembly and the engine room main wire harness, measure the resistance between SR+ and SR–.

OK:

Resistance: 1 MΩ or Higher

NG → **Repair or replace engine room main wire harness.**

OK

Repair or replace harness or connector between airbag sensor assembly and engine room main wire harness.

11	Check engine room main wire harness.

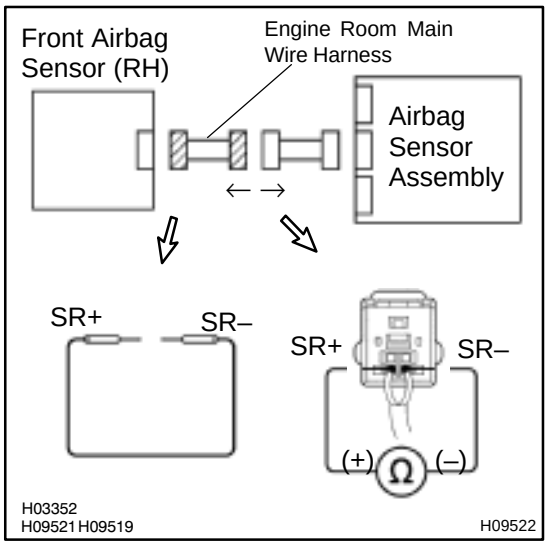

PREPARATION:

(a) Disconnect the engine room main wire harness connector on the airbag sensor assembly side.

(b) Using a service wire, connect SR+ and SR– of the connector (on the engine room main wire harness side) between the engine room main wire harness and the front airbag sensor (RH).

CHECK:

For the connector (on the engine room main wire harness side) between the airbag sensor assembly and the engine room main wire harness, measure the resistance between SR+ and SR–.

OK:

Resistance: Below 1 Ω

NG → **Repair or replace engine room main wire harness.**

OK

Repair or replace harness or connector between airbag sensor assembly and engine room main wire harness.

DI4LB–01

DTC	B1158/B1159/16	Front Airbag Sensor (LH) Malfunction

CIRCUIT DESCRIPTION

The front airbag sensor (LH) circuit consists of the airbag sensor assembly and front airbag sensor (LH).
For details of the function of each component, see OPERATION on page RS–2.
DTC B1158/B1159/16 is recorded when malfunction is detected in the front airbag sensor (LH) circuit.

DTC No.	DTC Detecting Condition	Trouble Area
B1158/B1159/16	●Front airbag sensor (LH) malfunction	●Front airbag sensor (LH) ●Wire harness ●Airbag sensor assembly

WIRING DIAGRAM

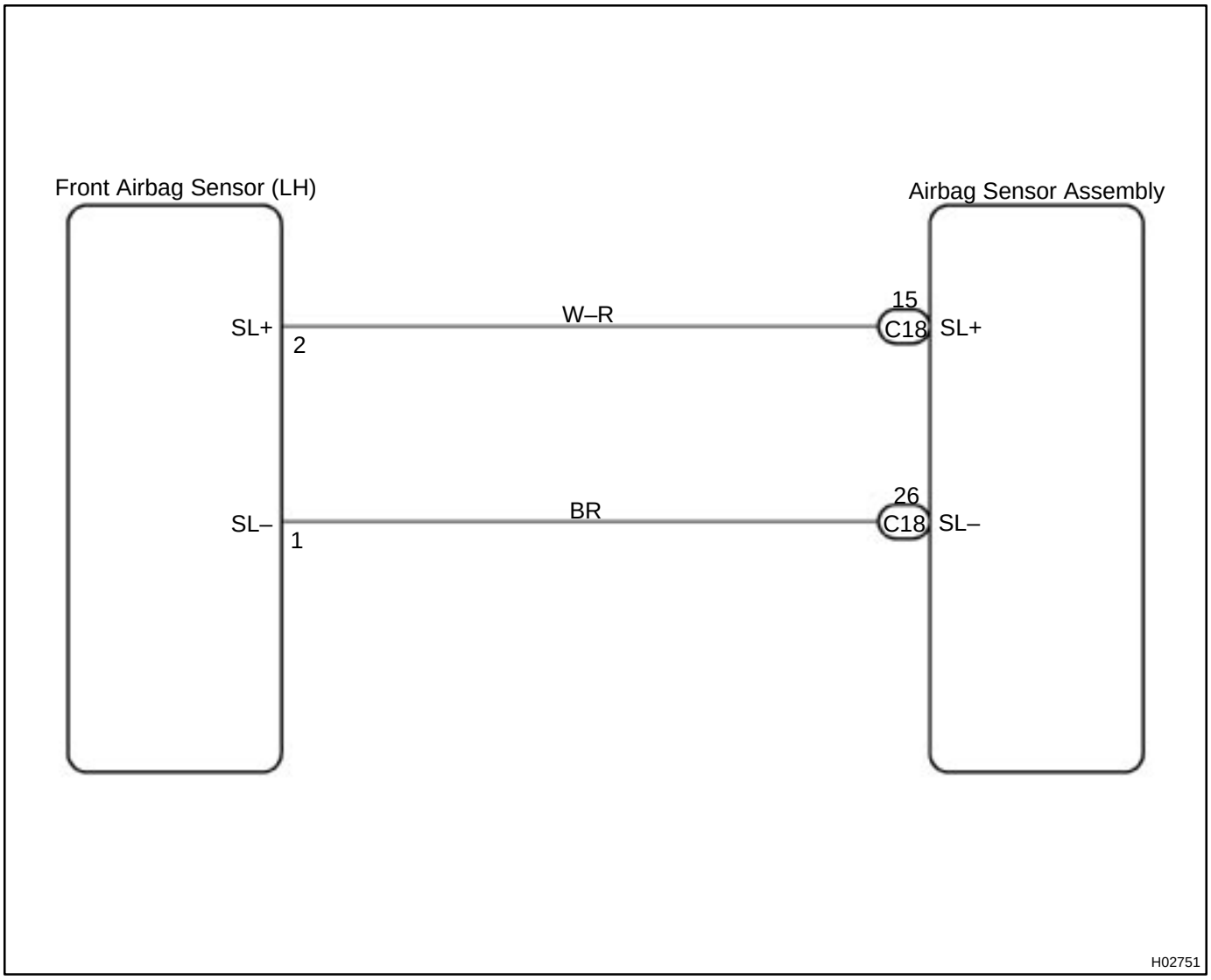

INSPECTION PROCEDURE

1	**Prepare for inspection. (See step 1 on page DI–787)**

2	**Check wire harness (to B+).**

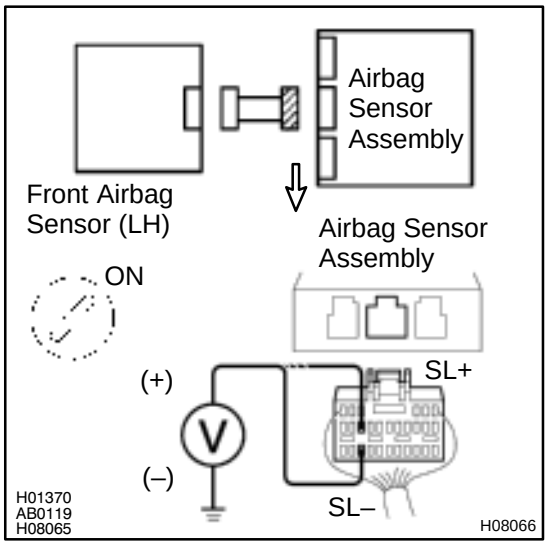

CHECK:

(a) Turn ignition switch to ON.

(b) For the connector (on the airbag sensor assembly side) between the front airbag sensor (LH) and the airbag sensor assembly, measure the voltage between body ground and each of SL+ and SL–.

OK:

Voltage: Below 1 V

NG → **Repair or replace harness or connector between front airbag sensor (LH) and airbag sensor assembly.**

OK

3	**Check wire harness (to ground).**

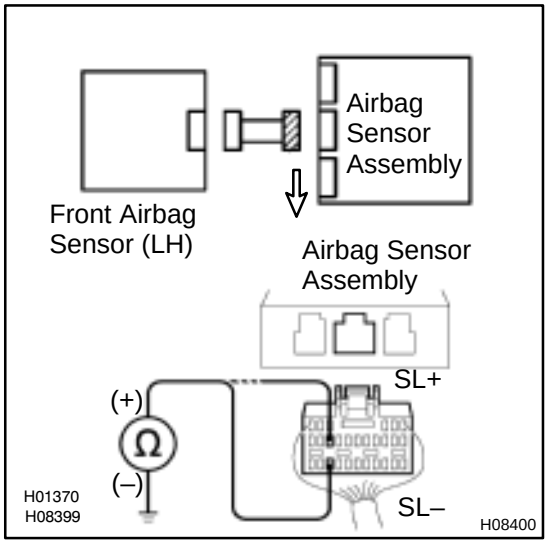

CHECK:

For the connector (on the airbag sensor assembly side) between the front airbag sensor (LH) and the airbag sensor assembly, measure the resistance between body ground and each of SL+ and SL–.

OK:

Resistance: 1 MΩ or Higher

NG → **Repair or replace harness or connector between front airbag sensor (LH) and airbag sensor assembly.**

OK

4	Check wire harness.

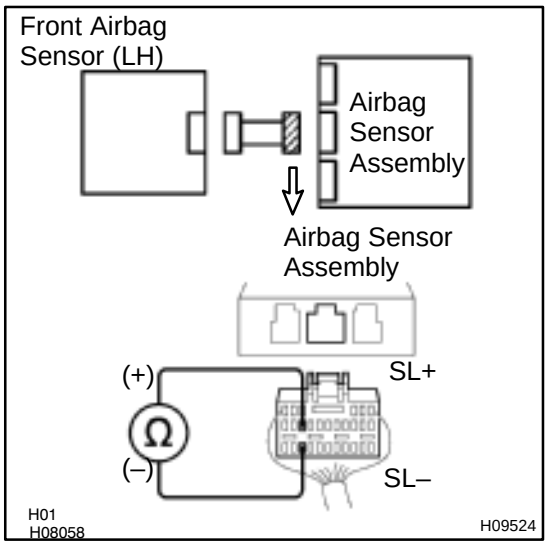

CHECK:

For the connector (on the airbag sensor assembly side) between the front airbag sensor (LH) and the airbag sensor assembly, measure the resistance between SL+ and SL–.

OK:

Resistance: 1 MΩ or Higher

NG → **Repair or replace harness or connector between front airbag sensor (LH) and airbag sensor assembly.**

OK

5	Check wire harness.

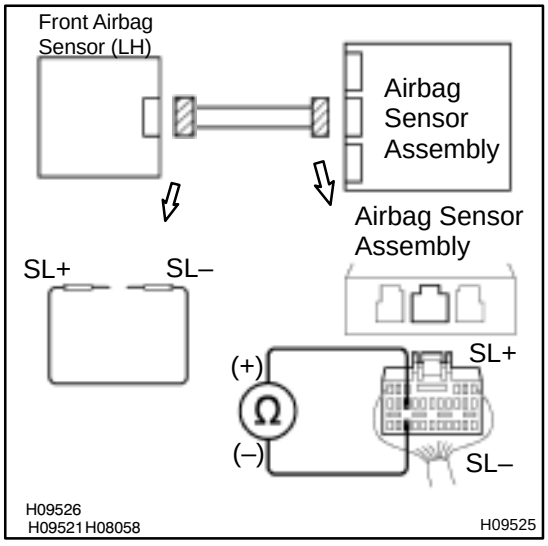

PREPARATION:

Using a service wire, connect SL+ and SL– of the connector (on the front airbag sensor (LH) side) between the airbag sensor assembly and the front airbag sensor (LH).

CHECK:

For the connector (on the airbag sensor assembly side) between the front airbag sensor (LH) and the airbag sensor assembly, measure the resistance between SL+ and SL–.

OK:

Resistance: Below 1 Ω

NG → **Repair or replace harness or connector between front airbag sensor (LH) and airbag sensor assembly.**

OK

6	Check front airbag sensor (LH).

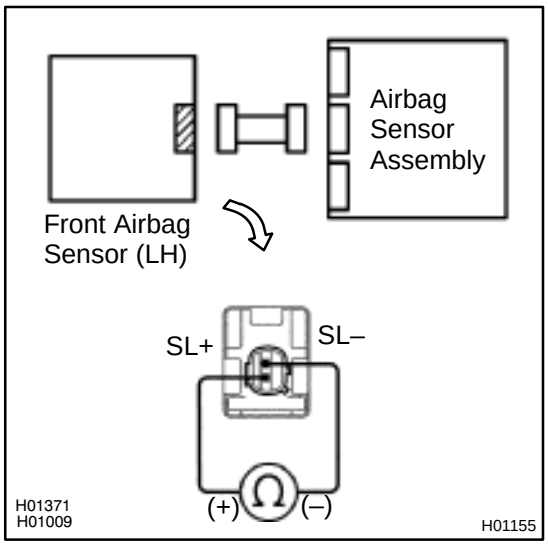

CHECK:

For the connector (on the front airbag sensor (LH)), measure the resistance between SL+ and SL–.

OK:

Resistance: 300 – 1500 Ω

NG → **Replace front airbag sensor (LH).**

OK

7	**Check airbag sensor assembly.**

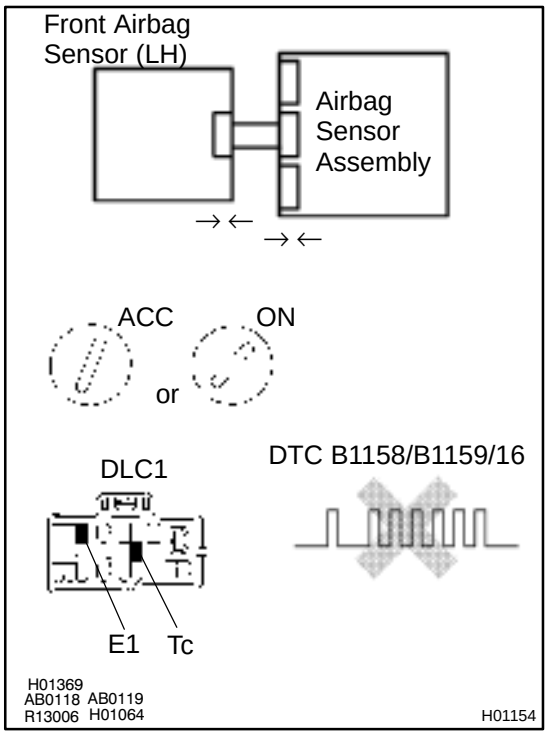

PREPARATION:

(a) Turn ignition switch to LOCK.
(b) Disconnect negative (–) terminal cable from the battery, and wait at least for 90 seconds.
(c) Connect the front airbag sensor (LH) connector and airbag sensor assembly connector.
(d) Connect negative (–) terminal cable to the battery, and wait at least for 2 seconds.

CHECK:

(a) Turn ignition switch to ACC or ON, and wait at least for 20 seconds.
(b) Clear DTC stored in memory.
(See page DI–626)
(c) Turn ignition switch to LOCK, and wait at least for 20 seconds.
(d) Turn ignition switch to ACC or ON, and wait at least for 20 seconds.
(e) Check DTC.
(See page DI–626)

OK:

DTC B1158/B1159/16 is not output.

HINT:
Codes other than code B1158/B1159/16 may be output at this time, but they are not relevant to this check.

NG → **Replace airbag sensor assembly.**

OK

From the results of the above inspection, the malfunctioning part can now be considered normal. To make sure of this, use the simulation method to check.

DI1BN–08

DTC	Normal	Source Voltage Drop

CIRCUIT DESCRIPTION

The SRS is equipped with a voltage–increase circuit (DC–DC converter) in the airbag sensor assembly in case the source voltage drops.
When the battery voltage drops, the voltage–increase circuit (DC–DC converter) functions to increase the voltage of the SRS to normal voltage.
The diagnosis system malfunction display for this circuit is different from other circuits that is when the SRS warning light remains lit up and the DTC is a normal code, source voltage drop is indicated.
Malfunction in this circuit is not recorded in the airbag sensor assembly, and the source voltage returns to normal, the SRS warning light automatically goes off.

DTC No.	Diagnosis
(Normal)	Source voltage drop

WIRING DIAGRAM

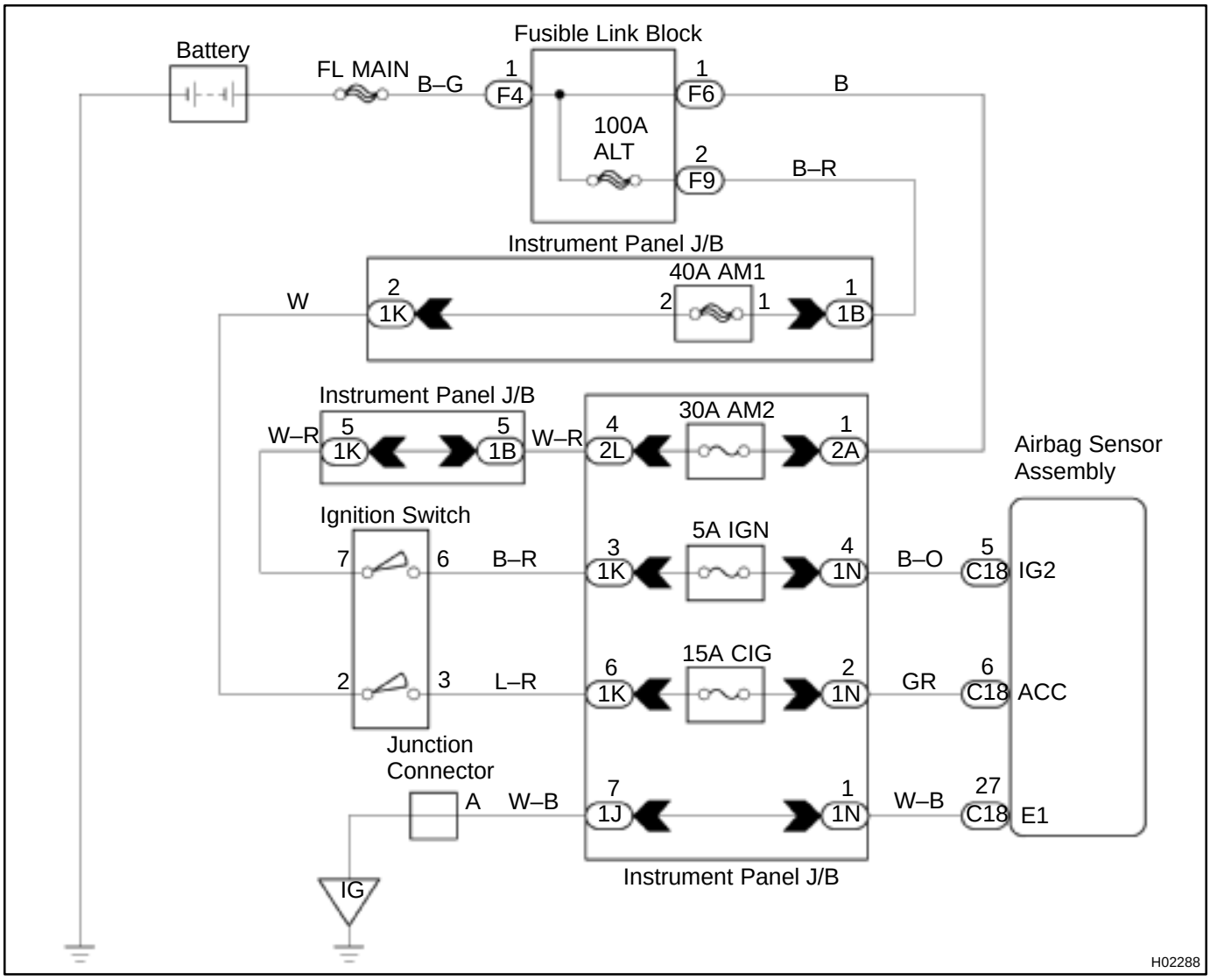

INSPECTION PROCEDURE

1	**Prepare for inspection.**

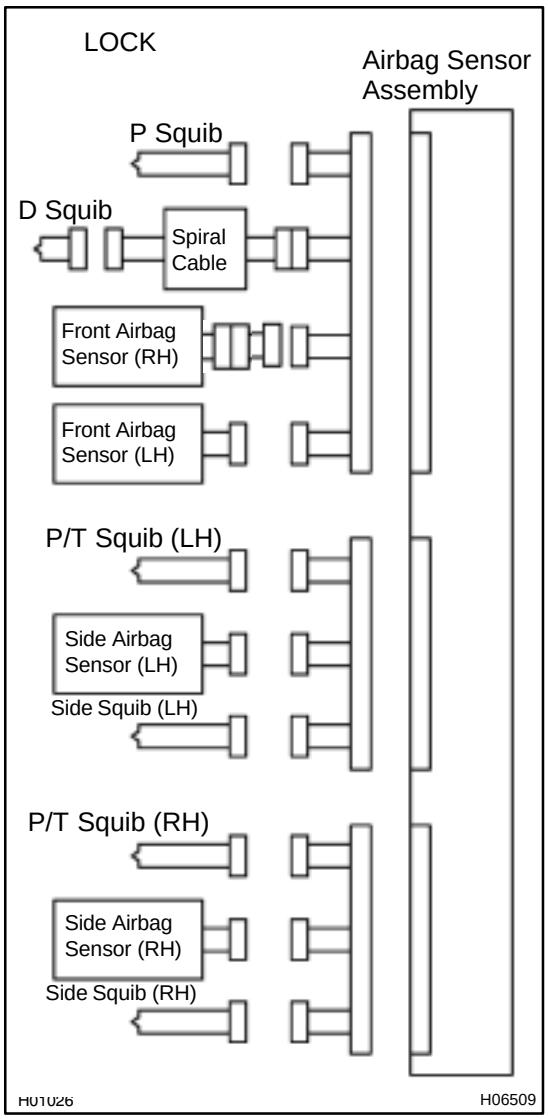

PREPARATION:

(a) Disconnect negative (–) terminal cable from the battery, and wait at least for 90 seconds.

(b) Remove the steering wheel pad. (See page SR–11)

(c) Disconnect the connector of the front passenger airbag assembly. (See page RS–28)

(d) Disconnect the connector of the side airbag assembly RH and LH. (See page RS–40 and RS–52)

(e) Disconnect the connector of the seat belt pretensioner RH and LH. (See page BO–126)

(f) Disconnect the connectors of the airbag sensor assembly.
(See page RS–59)

(g) Disconnect the connector of the front airbag sensor LH and RH. (See page RS–64)

(h) Disconnect the connector of the side airbag sensor assembly RH and LH. (See page RS–69)

CAUTION:

Store the steering wheel pad with the front surface facing upward.

2	Check source voltage.

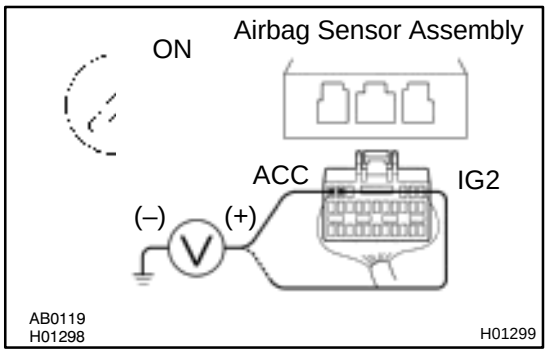

PREPARATION:

Connect negative (–) terminal cable to the battery.

CHECK:

(a) Turn ignition switch ON.

(b) Measure the voltage each of IG2 and ACC on the sensor and operate electric system. (defogger, wiper, headlight, heater blower, etc.)

OK:

Voltage: 10 – 14 V

NG → **Check harness between battery and airbag sensor assembly, and check battery and charging system.**

OK

3	Does SRS warning light turn off?

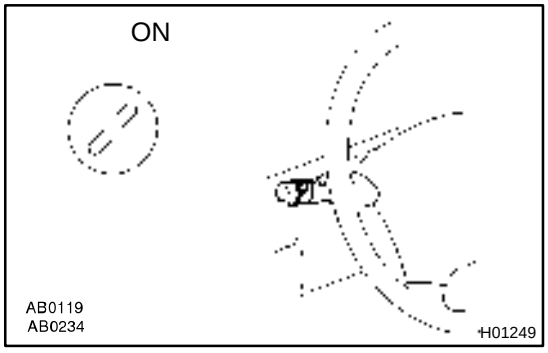

PREPARATION:

(a) Turn ignition switch to LOCK.

(b) Connect the steering wheel pad connector.

(c) Connect the front passenger airbag assembly connector.

(d) Connect the airbag sensor assembly connectors.

(e) Connect the side airbag assembly connectors.

(f) Connect the seat belt pretensioner connectors.

(g) Connect the side airbag sensor assembly connectors.

(h) Connect the front airbag sensor connectors.

(i) Turn ignition switch to ON.

CHECK:

Operate electric system (defogger, wiper, headlight, heater blower, etc.) and check that SRS warning light goes off.

NO → **Check for DTCs. If a DTC is output, perform troubleshooting for the DTC. If a normal code is output, replace airbag sensor assembly.**

YES

From the results of the above inspection, the malfunctioning part can now be considered normal. To make sure of this, use the simulation method to check.

SRS Warning Light Circuit Malfunction (Always lights up, when ignition switch is in LOCK position.)

CIRCUIT DESCRIPTION

The SRS warning light is located on the combination meter.
When the SRS is normal, the SRS warning light lights up for approx. 6 seconds after the ignition switch is turned from the LOCK position to ACC or ON position, and then turns off automatically.
If there is a malfunction in the SRS, the SRS warning light lights up to inform the driver of the abnormality.
When terminals Tc and E1 of the DLC1 are connected, the DTC is displayed by blinking the SRS warning light.

WIRING DIAGRAM

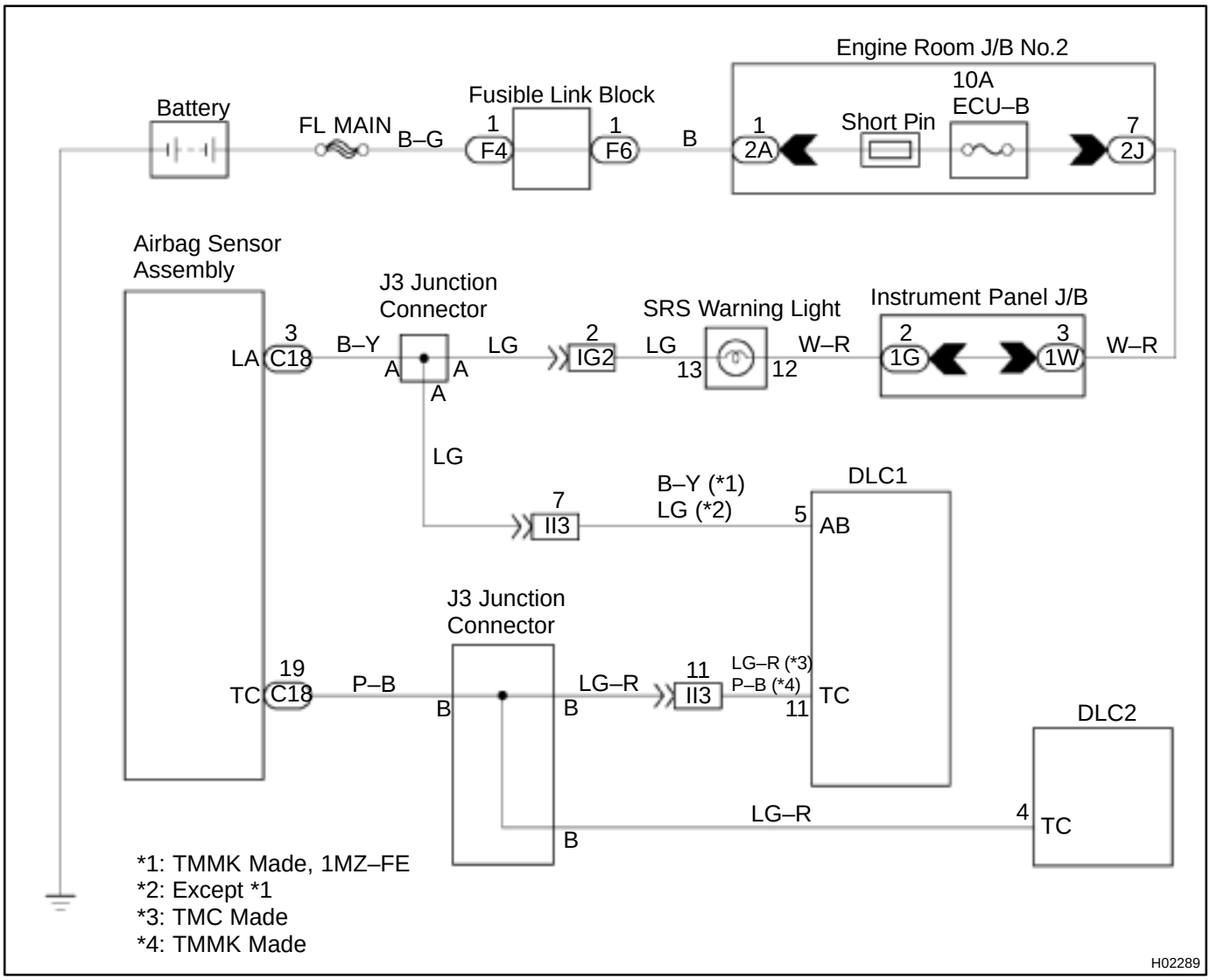

INSPECTION PROCEDURE

1	**Prepare for inspection. (See step 1 on page DI–787)**

2	**Does SRS warning light turn off?**

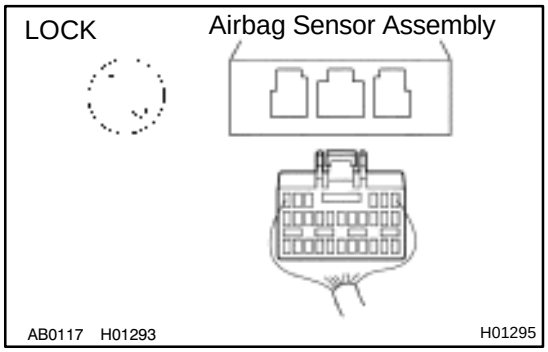

PREPARATION:

(a) Turn ignition switch to LOCK.
(b) Disconnect negative (–) terminal cable from the battery, and wait at least for 90 seconds.
(c) Disconnect the airbag sensor assembly connector.
(d) Connect negative (–) terminal cable to the battery.

CHECK:

Check operation of SRS warning light.

NO → **Check SRS warning light circuit or terminal AB circuit of DLC1.**

YES

Replace airbag sensor assembly.

SRS Warning Light Circuit Malfunction (Does not light up, when ignition switch is turned to ACC or ON.)

CIRCUIT DESCRIPTION

The SRS warning light is located on the combination meter.
When the SRS is normal, the SRS warning light lights up for approx. 6 seconds after the ignition switch is turned from LOCK position to ACC or ON position, and then turns off automatically.
If there is a malfunction in the SRS, the SRS warning light lights up to inform the driver of the abnormality.
When terminals Tc and E1 of the DLC1 are connected, the DTC is displayed by blinking the SRS warning light.

WIRING DIAGRAM

See page DI–790.

INSPECTION PROCEDURE

1	**Check ECU–B Fuse.**

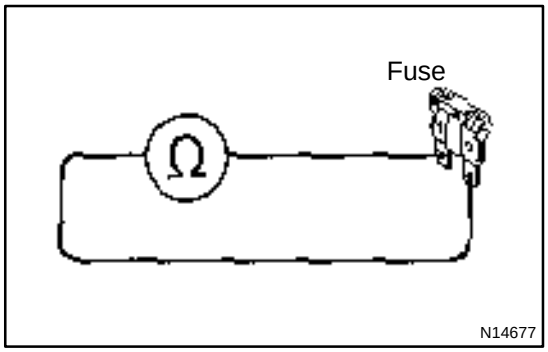

PREPARATION:
Remove ECU–B fuse.
CHECK:
Check continuity of ECU–B fuse.
OK:

Continuity

HINT:

- Fuse may be burnt out even if it appears to be OK during visual inspection.
- If fuse is OK, install it.

NG → **Go to step 5.**

OK

2	**Prepare for inspection. (See step 1 on page DI–787)**

3	**Check SRS warning light circuit.**

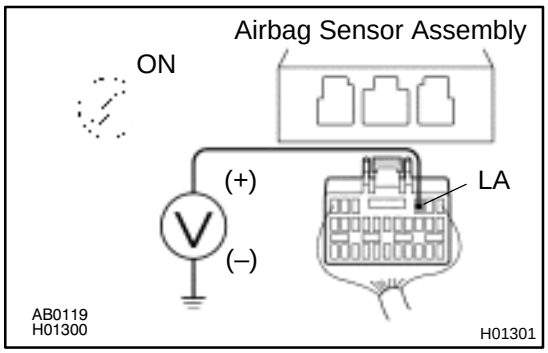

PREPARATION:

(a) Connect negative (–) terminal cable to the battery.

(b) Turn ignition switch to ACC or ON.

CHECK:

Measure the voltage LA terminal of the harness side connector of the airbag sensor assembly.

OK:

Voltage: 10 – 14 V

NG → **Check SRS warning light bulb or repair SRS warning light circuit.**

OK

4	Does SRS warning light come on?

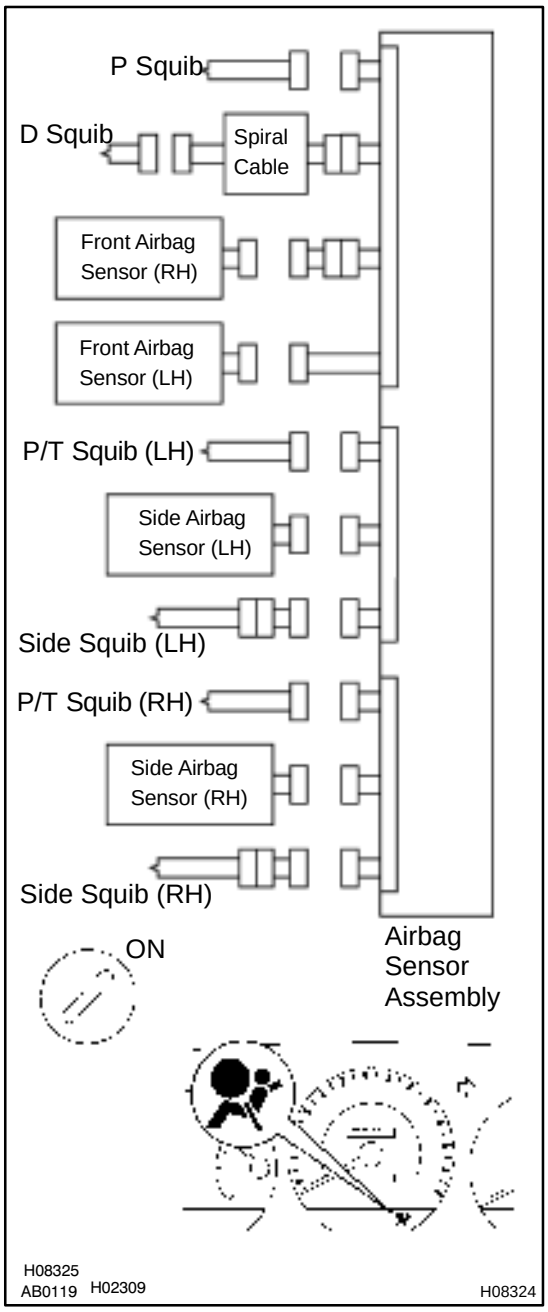

PREPARATION:

(a) Disconnect negative (–) terminal cable from the battery.
(b) Connect the airbag sensor assembly connector.
(c) Connect negative (–) terminal cable to the battery, and wait at least for 2 seconds.
(d) Turn ignition switch to ACC or ON.

CHECK:

Check operation of SRS warning light.

NO → **Check terminal LA of airbag sensor assembly. If normal, replace airbag sensor assembly.**

YES

From the results of the above inspection, the malfunctioning part can now be considered normal. To make sure of this, use simulation method to check.

5	**Is new ECU–B fuse burnt out again?**

NO → **Using simulation method, reproduce malfunction symptoms. (See page IN–21)**

YES

Check harness between ECU–B fuse and SRS warning light.

Tc Terminal Circuit

CIRCUIT DESCRIPTION

By connecting terminals Tc and E1 of the DLC1 the airbag sensor assembly is set in the DTC output mode. The DTCs are displayed by blinking the SRS warning light.

WIRING DIAGRAM

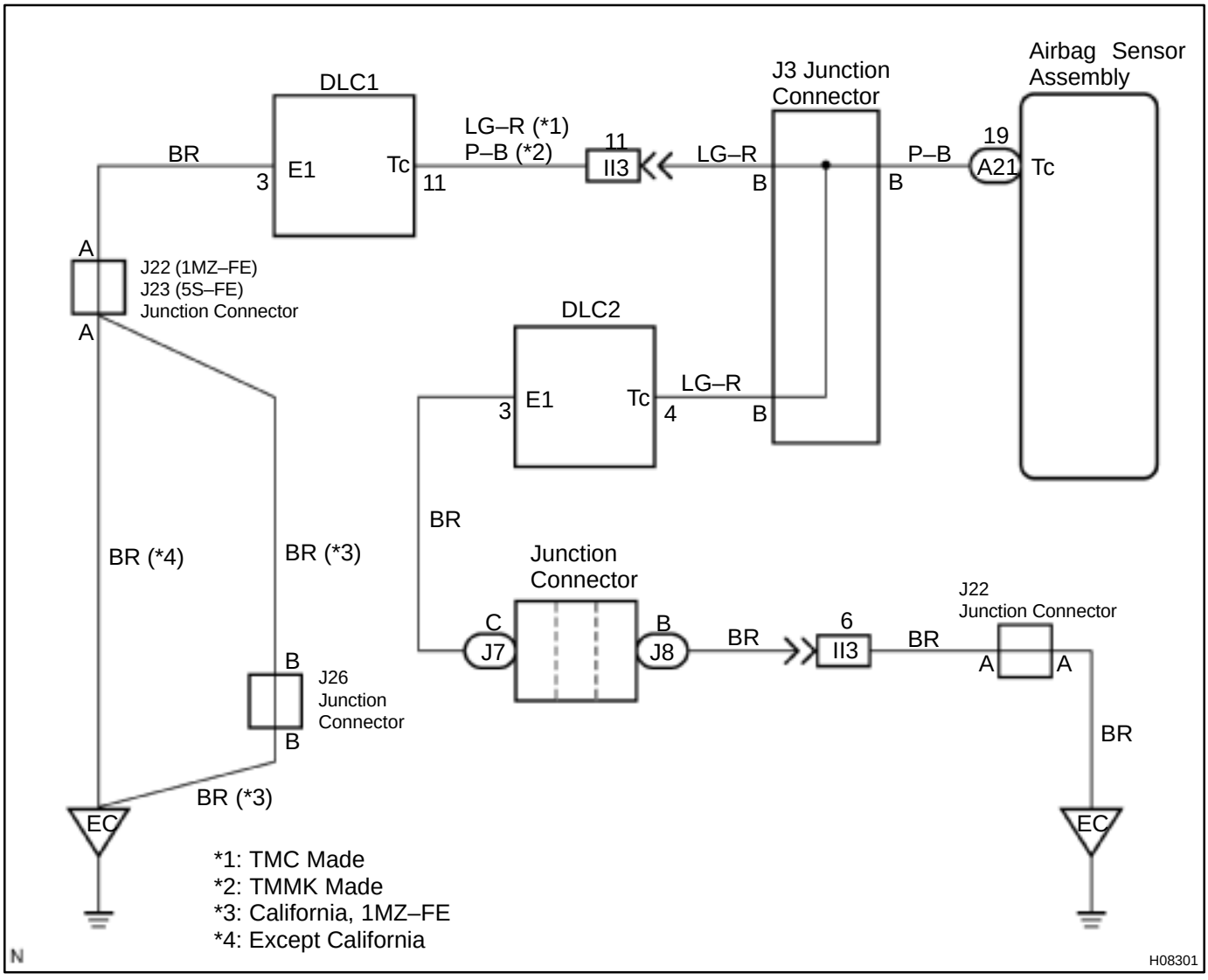

INSPECTION PROCEDURE

If the DTC is not displayed, do the following troubleshooting.

1	**Does SRS warning light up for approx. 6 seconds?**

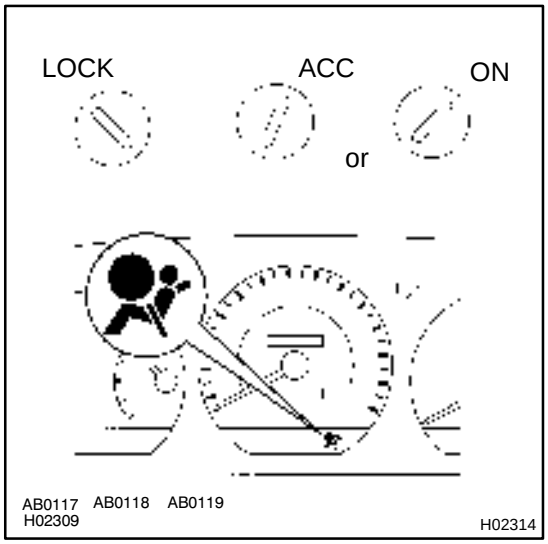

PREPARATION:

Check operation of the SRS warning light after ignition switch is turned from LOCK position to ACC or ON position.

NO → **Check SRS warning light system. (See page DI–626)**

YES

2	**Check voltage between terminals Tc and E1 of DLC1.**

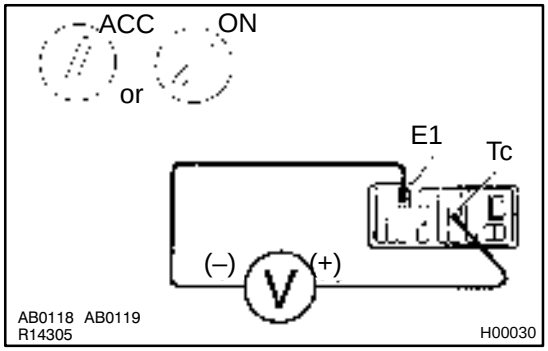

PREPARATION:

Turn ignition switch to ACC or ON.

CHECK:

Measure the voltage between terminals Tc and E1 of DLC1.

OK:

Voltage: 10 – 14 V

OK → **Go to step 4.**

NG

3	Check voltage between terminal Tc of DLC1 and body ground.

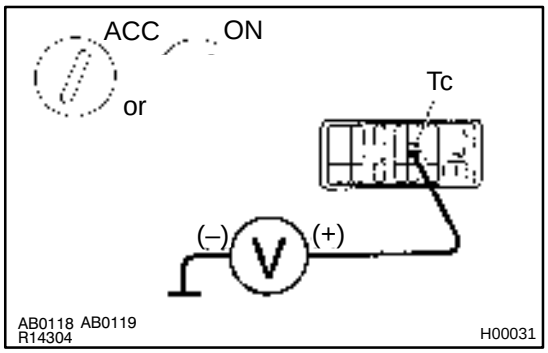

CHECK:

Measure the voltage between terminal Tc of DLC1 and body ground.

OK:

Voltage: 10 – 14 V

OK	Check harness between terminal E1 of DLC1 and body ground.

NG

4	Check airbag sensor assembly.

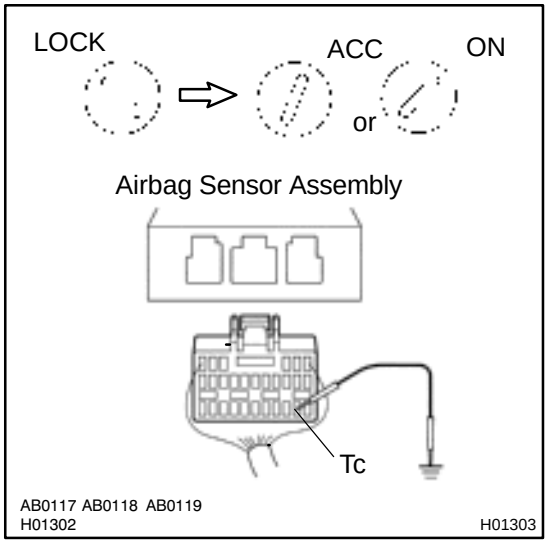

PREPARATION:

(a) Turn ignition switch to LOCK.
(b) Disconnect negative (–) terminal cable from the battery, and wait at least for 90 seconds.
(c) Disconnect the airbag sensor assembly connector.
(d) Insert service wire into terminal Tc from back side as shown in the illustration.
(e) Connect the airbag sensor assembly connector with service wire.
(f) Connect negative (–) terminal cable to the battery.
(g) Turn ignition switch to ACC or ON and wait at least for 20 seconds.
(h) Connect service wire of terminal Tc to body ground.

CHECK:

Check operation of SRS warning light.

OK:

SRS waning light comes on.

NOTICE:

Pay due attention to the terminal connecting position to avoid a malfunction.

OK	Check harness between the airbag sensor assembly and DLC1.

NG

Replace airbag sensor assembly.

If the DTC is displayed without a DTC check procedure, perform the following troubleshooting.

1	**Check resistance between terminal Tc of airbag sensor assembly and body ground.**

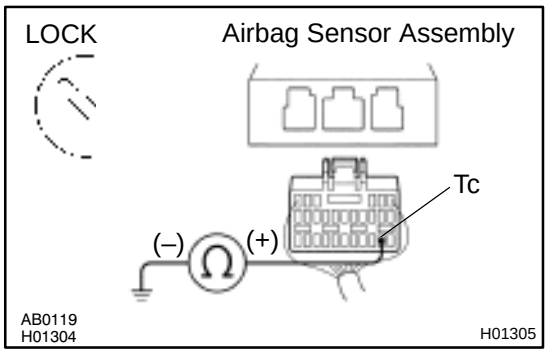

PREPARATION:

(a) Turn ignition switch to LOCK.

(b) Disconnect negative (–) terminal cable from the battery, and wait at least for 90 seconds.

(c) Disconnect the airbag sensor assembly connector.

CHECK:

Check resistance between terminal Tc of the airbag sensor assembly connector and body ground.

OK:

Resistance: 1 MΩ or Higher

NG → **Repair or replace harness or connector.**

OK

Replace airbag sensor assembly.

WIRELESS DOOR LOCK CONTROL SYSTEM

DI05L–03

HOW TO PROCEED WITH TROUBLESHOOTING

HINT:

Troubleshooting of the wireless door lock control system is based on the premise that the door lock control system is operating normally. Accordingly, before troubleshooting the wireless door lock control system, first make certain that the door lock control system is operating normally.

Perform troubleshooting in accodnce with procedure on the following page.

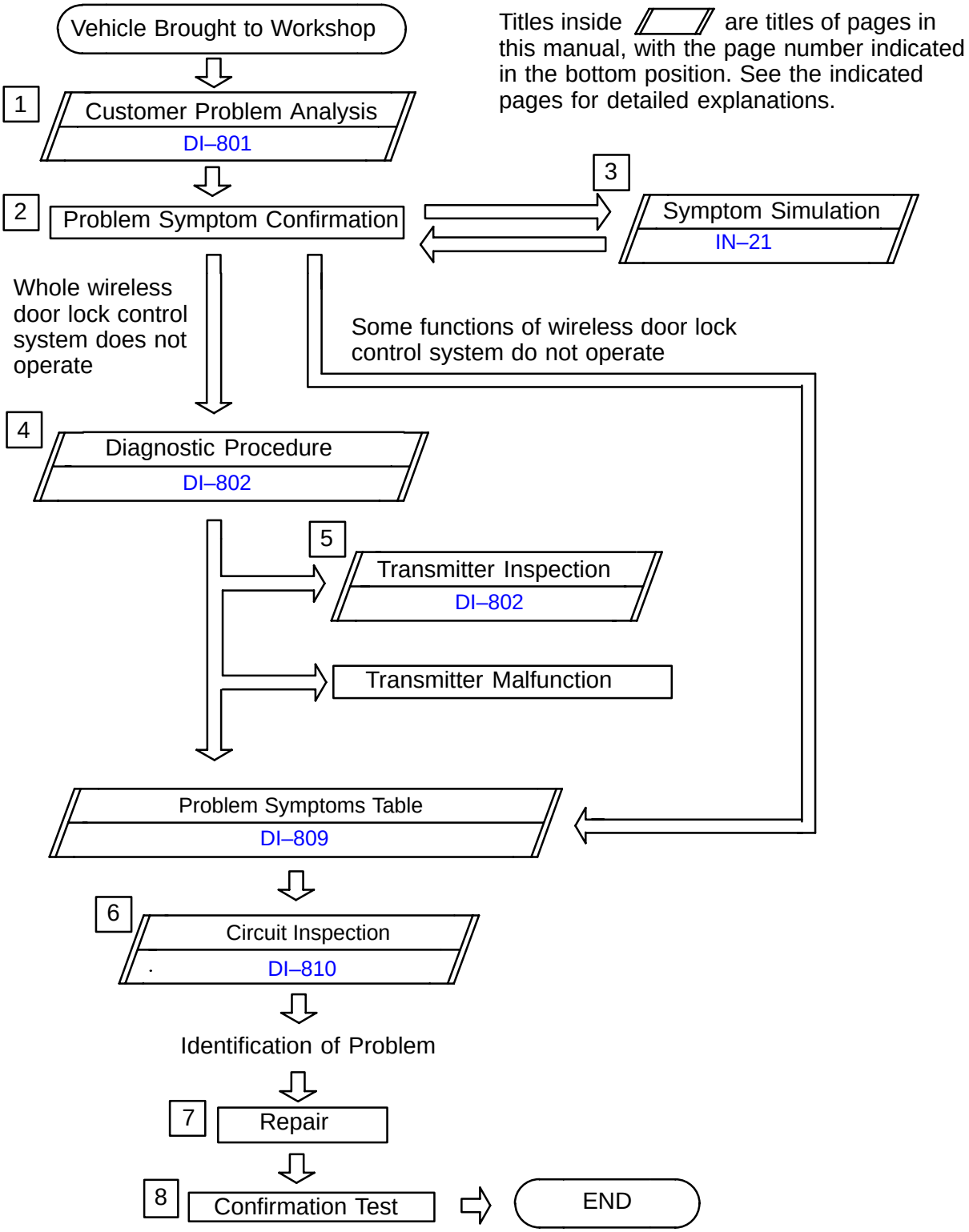

DI05M–02

CUSTOMER PROBLEM ANALYSIS CHECK

WIRELESS DOOR LOCK CONTROL System Check Sheet

Inspector's Name _____

Customer's Name		**Registration No.**	
		Registration Year	/ /
		Frame No.	
Date Vehicle Brought In	/ /	**Odometer Reading**	**km Miles**

Date Problem First Occurred		/ /
Frequency Problem Occurs		☐ Constant ☐ Sometimes (times per day, month) ☐ Once only
Weather Conditions When Problem Occurred	**Weather**	☐ Fine ☐ Cloudy ☐ Rainy ☐ Snowy ☐ Various/Others
	Outdoor Temperature	☐ Hot ☐ Warm ☐ Cool ☐ Cold (Approx. ˚F (˚C))
	Place	☐ Everywhere ☐ Specific Locality( )
Date Transmitter Battery Last Replaced		/ /

Problem Symptom

☐ Whole wireless door lock control system does not operate.	
☐ Only door unlock operation is not possible.	
☐ Only door lock operation is not possible.	
☐ Only key confinement prevention function is not possible.	
☐ Wireless door lock function operates even each door is opened.	
☐ Only PANIC operation is not possible.	
☐ Wireless door lock functions incorrectly. (Although one door is unlocked, when the transmitter switch is pressed, all doors become unlocked.)	☐ When Front RH door is unlocked ☐ When Front LH door is unlocked ☐ When Rear RH door is unlocked ☐ When Rear LH door is unlocked
☐ Others	

DI05N–03

PRE–CHECK

1. INSPECT TRANSMITTER

1	**Check the transmitter operation.**

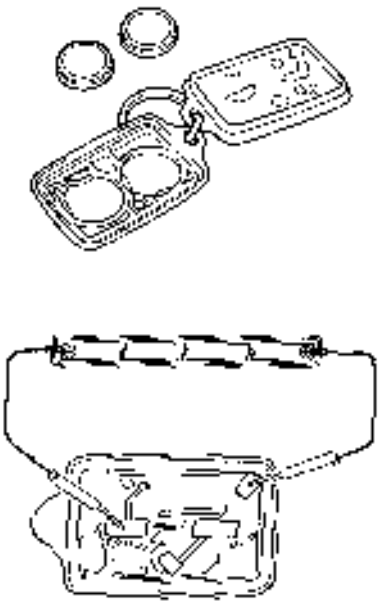

N13160
N13161
I00239

HINT:
This inspection is not directly for the purpose of checking the capaciy of the transmitter battery, but is performed when remote control operation becomes difficult or impossible, in order to ascertain if this is caused by low battery capacity.

PREPARATION:

(a) Using a screwdriver, pry outward the cover.
(b) Remove the battery.

CHECK:

(a) Connect 4 new 1.5–V dry–cell batteries in series. Connect the battery ~ terminal to the battery receptacle side terminal and the battery > terminal to the bottom terminal to provide 6 V to the transmitter.
(b) Push the wireless door lock remote control switch on the side of the transmitter body and operate the door lock by remote control.

OK:

Remote control operation is possible.

OK → **Replace the battery for transmitter. (See page DI–802)**

NG

Replace transmitter and registration of recognition code. (See page DI–802)

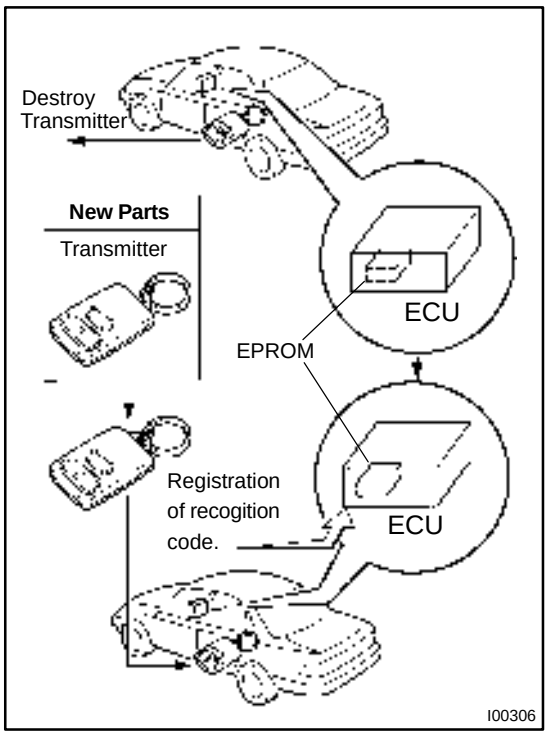

2. REPLACE WIRELESS DOOR LOCK ECU AND TRANSMITTER

HINT:

Disassembly and assembly of the transmitter includes details of spare parts and replacement procedure for detective parts found through troubleshooting.

Each part is a precision electronic component so handle with care.

(a) Spare parts and replacement procedure for malfunctioning parts (transmitter malfunction):
  (1) Prepare a new transmitter.
  (2) Registration of recogition code.
  (3) Check that door lock remote control operation works.

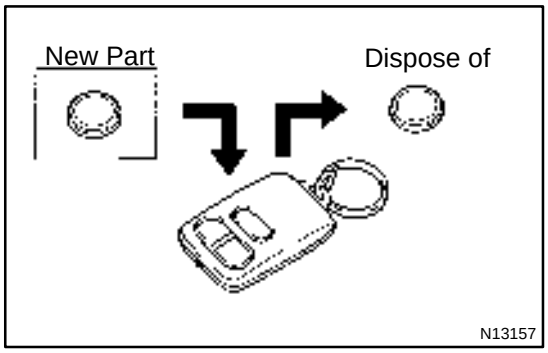

(b) Spare parts and replacement procedure for malfunctioning parts (battery malfunction):
  (1) Prepare a new battery.
  (2) Remove the battery from transmitter.
  (3) Install a new battery into transmitter.

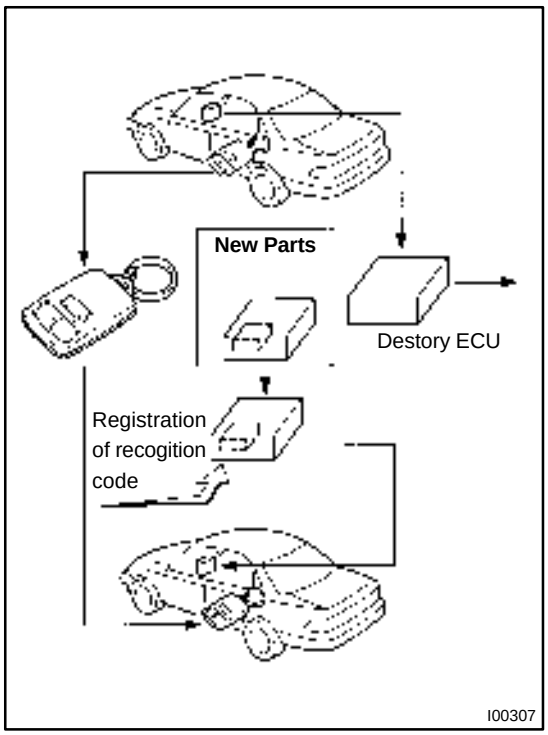

(c) Spare parts and replacement procedure for malfunctioning parts (ECU malfunction):
  (1) Prepare a new ECU.
  (2) Remove the ECU from the vehicle.
  (3) Install a new ECU in the vehicle.
  (4) Registration of recogition code.

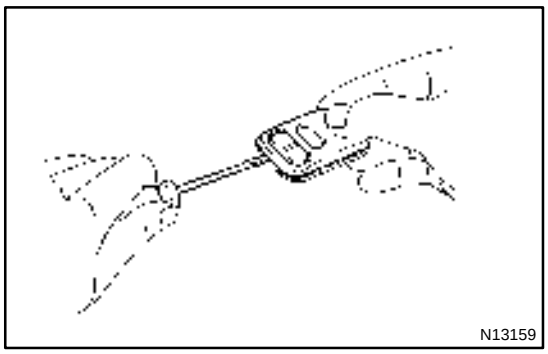
N13159

(d) Replace the battery for transmitter.
(1) Using a screwdriver, pry outward the cover.

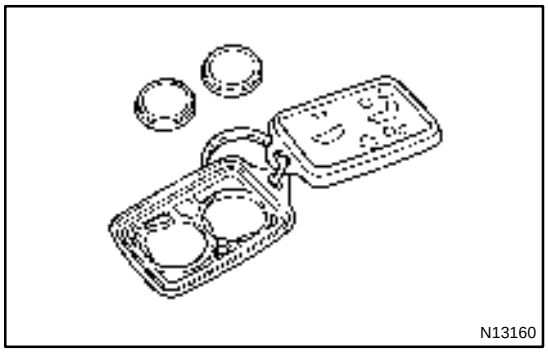
N13160

(2) Remove the battery.
(3) Set a new battery into the transmitter.
(4) Install the cover to the transmitter.

3. REGISTRATION OF RECOGNITION CODE

The recognition code of the transmitter is electronically registered (written to and stored) in an EEPROM contained in the wireless door lock ECU. This makes it possible to register up to 2 different codes in the EEPROM.
New recognition codes can be registered after all previous codes have been erased. A transmitter code can be registered into the EEPROM by following the steps numbered (1) to (5).

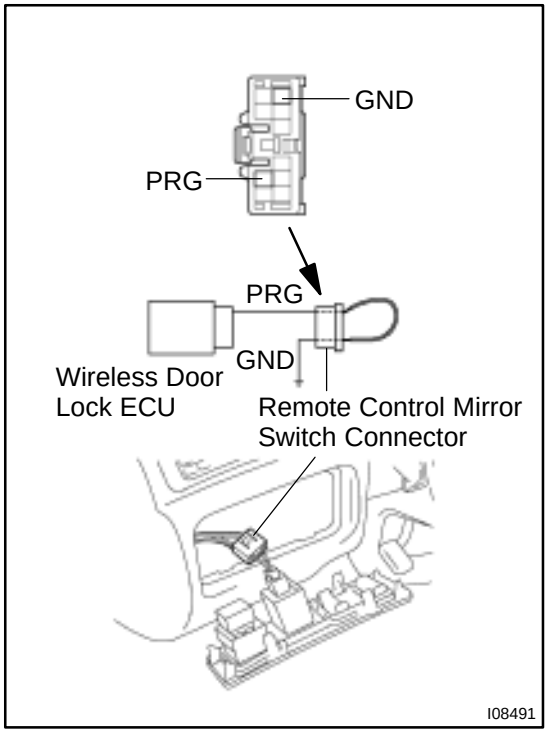

I08491

(1) The wireless door lock ECU and remote control mirror switch are connected to each other via a PRG terminal, and the GND terminal of the remote control mirror switch connector is grounded to body. Remove the connector from the remote control mirror switch, and use a test lead to short the PRG and GND connector together. As a result, the PRG terminal of the wireless door lock ECU will be grounded to body and will cause all transmitter recognition codes previously registered in the EEPROM to be erased. At the same time, the ECU will respond by operating once the lock and unlock functions of all the doors, and the open function of the trunk lid.

(2) A transmitter recognition code is registered by pressing any single button of the transmitter to be registered. Once the code is registered, the ECU responds again by operating once the lock and unlock functions of all the doors.
(3) To register the recognition code of an additional transmitter, follow the procedure shown in (2).
(4) After completing the registration of the codes, remove the test lead from the remote control mirror switch connector terminals to allow the system to revert to the normal operation.
(5) Using the registered transmitter, verify that the system operates properly.

4. DIAGNOSTIC PROCEDURE

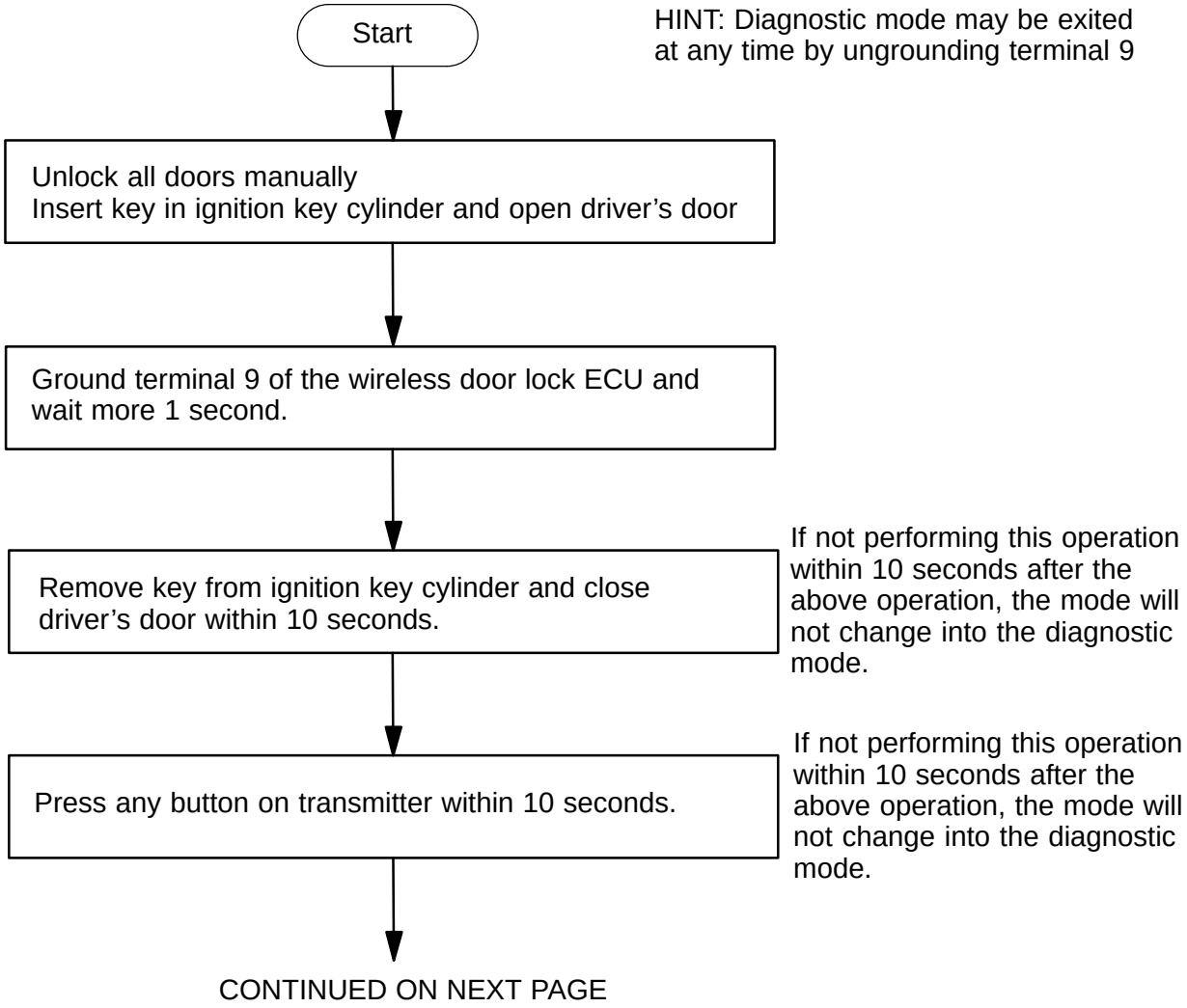

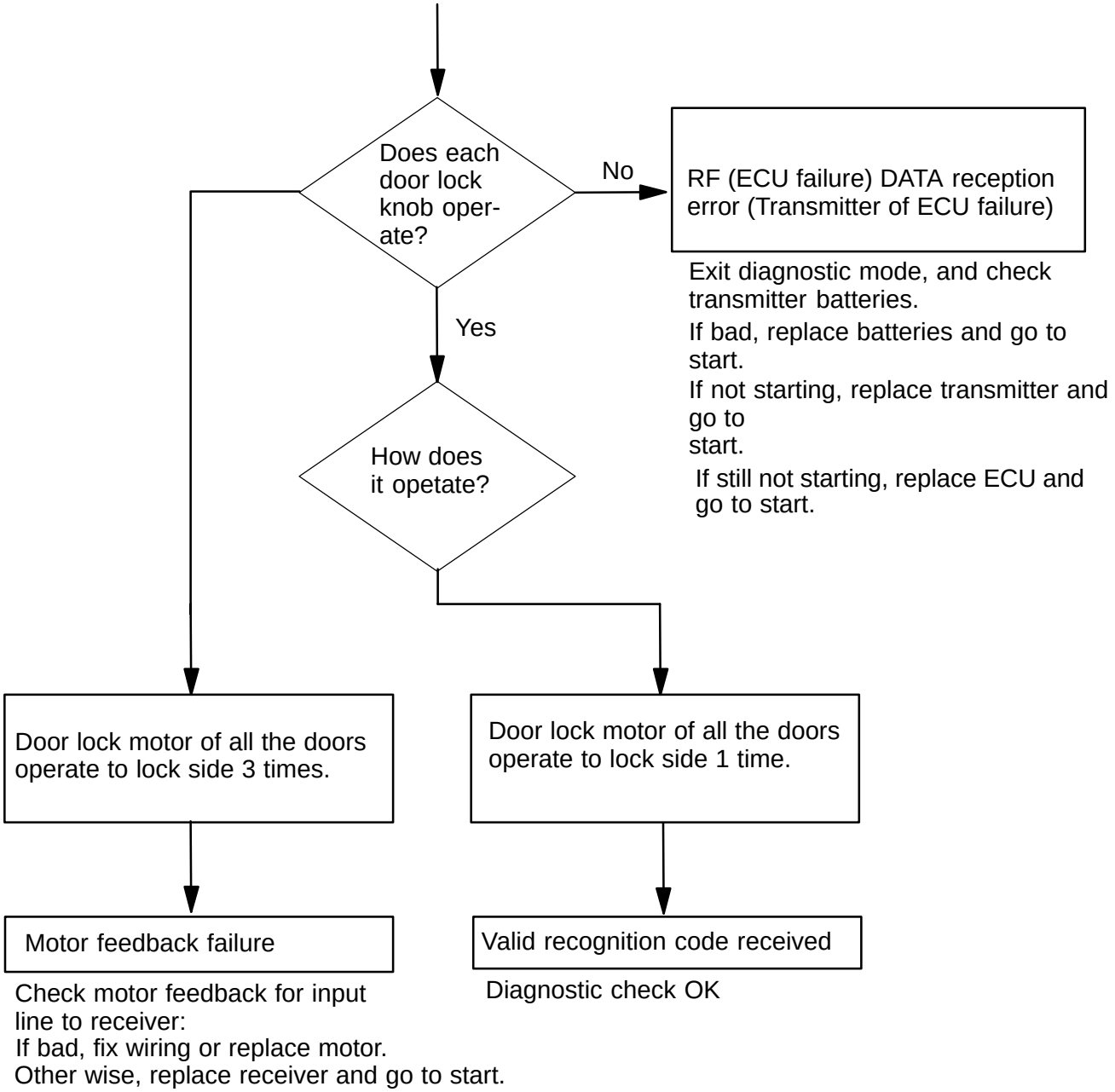
Does each door lock knob operate?
No
RF (ECU failure) DATA reception error (Transmitter of ECU failure)
Exit diagnostic mode, and check transmitter batteries.
If bad, replace batteries and go to start.
If not starting, replace transmitter and go to start.
If still not starting, replace ECU and go to start.
Yes
How does it opetate?
Door lock motor of all the doors operate to lock side 3 times.
Door lock motor of all the doors operate to lock side 1 time.
Motor feedback failure
Check motor feedback for input line to receiver:
If bad, fix wiring or replace motor.
Other wise, replace receiver and go to start.
Valid recognition code received
Diagnostic check OK

DI05O–03

PARTS LOCATION

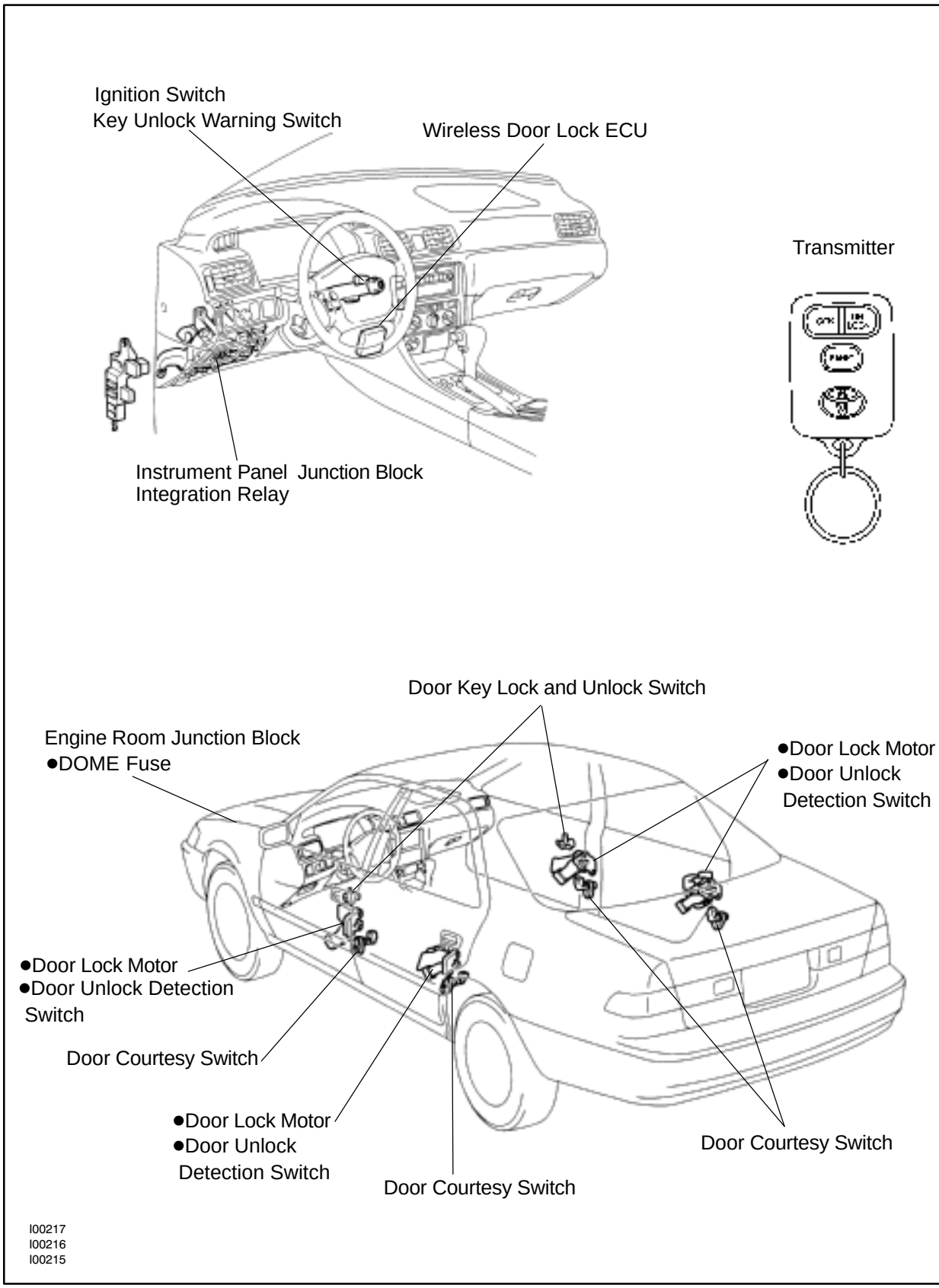

I00217
I00216
I00215

I00241

DI1KR–03

TERMINALS OF ECU

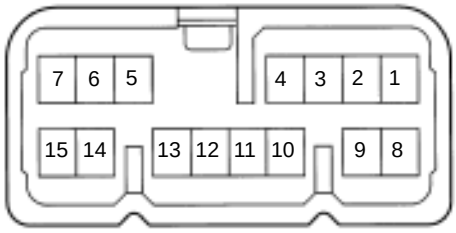

I00227

Symbols (Terminals No.)	Wiring Color	Condition	STD Voltage (V)
1 – Ground (GND – Ground)	W – B	Always.	Below 1 V
4 – Ground (TAIL – Ground)	G – R	TAIL lamps ”ON”	Below 1 V
		TAIL lamps ”OFF”	10 – 14 V
5 – Ground (PINI – Ground)	LG	Always.	4 – 6 V
		Push the PANIC switch.	Below 1.5 V
7 – Ground (UL3 – Ground)	R – G	Door key lock and unlock switch ”UNLOCK”. (Driver’s Door)	Below 1.5 V
		Door key lock and unlock switch ”OFF” or ”LOCK”. (Driver’s Door)	8 – 10 V
8 – 1 (+B – E)	R	Always.	10 – 14 V
9 – Ground (PRG – Ground)	V	Ignition switch ”ON”	10 – 14 V
10 – Ground (KSW – Ground)	L – B	Key unlock warning switch ”ON”. (Key is inserted into key cylinder)	Below 1 V
		Key unlock warning switch ”OFF”.	10 – 14 V
11 – Ground (LSWD – Ground)	L – R	Door unlock detection switch ”ON”. (Driver’s Door)	Below 1 V
		Door unlock detection switch ”OFF”. (Driver’s Door)	10 – 14 V
12 – Ground (LSWP – Ground)	Y	Door unlock detection switch ”ON”. (Passenger’s Door)	Below 1 V
		Door unlock detection switch ”OFF”. (Passenger’s Door)	10 – 14 V
13 – Ground(LSWR – Ground)	L – Y	Door unlock detection switch ”ON”. (Either Rear Door)	Below 1 V
		Door unlock detection switch ”OFF”. (All Rear Doors)	10 – 14 V
14 – Ground (CTY – Ground)	R – W	Door courtesy switch ”ON”	Below 1 V
		Door courtesy switch ”OFF”	10 – 14 V
15 – Ground (L – Ground)	L – W	Door key lock and unlock switch ”LOCK”	Below 1 V
		Door key lock and unlock switch ”OFF” or ”UNLOCK”	8 – 10 V

DI05Q–03

PROBLEM SYMPTOMS TABLE

Perform troubleshooting of the circuit for the applicable problem symptom in the order given in the chart below. Proceed to the page located for each circuit.

HINT:

- Troubleshooting of the wireless door lock control system is based on the premise that the door lock control system and theft deterrent system are operating normally. Accordingly, before troubleshooting the wireless door lock control system, first make certain that the door lock control system and theft deterrent system are operating normally.
- If the instruction ”Proceed to next circuit inspection shown on matrix chart” is given in the flow chart for each circuit, proceed to the circuit with the next highest number in the table to continue the check.
- If the trouble still reappears even through there are no abnormalities in any of the other circuits, check and replace the Wireless Door Lock ECU as the last step.

Symptom	Suspect Area	See page
All functions of wireless door lock control system do no operate.	3. ECU Power Source Circuit. 4. Door Courtesy Switch Circuit. 5. Door Key Lock and Unlock Switch Circuit. (Unlock Side) 6. Door Key Lock and Unlock Switch Circuit. (Lock Side) 7. Key Unlock Warning Switch Circuit. 8. Wireless Door Lock ECU.	DI–810 DI–821 DI–815 DI–817 DI–819 IN–31
Only door unlock operation is not possible (Lock operation is possible).	1. Door Key Lock and Unlock Switch Circuit (Unlock Side) 2. Door Unlock Detection Switch Circuit 3. Wireless Door Lock ECU.	DI–815 DI–819 IN–31
Only door lock operation is not possible (Unlock operation is possible).	1. Door Key Lock and Unlock Switch Circuit (Lock Side) 2. Wireless Door Lock ECU	DI–817 IN–31
Only key confinement prevention function is not possible.	1. Key Unlock Warning Switch Circuit 2. Wireless Door Lock ECU	DI–819 IN–31
●Wireless door lock function operates even when each door is opened. ●Automatic lock function operates even if any door is opened within 30 seconds after all doors are unlocked by wireless door lock control system.	1. Door Courtesy Switch Circuit 2. Wireless Door Lock ECU	DI–821 IN–31
Wireless door lock functions incorrectly. (Although one door is unlocked, when the transmitter switch is pressed, all doors are unlocked.)	1. Door Unlock Detection Switch Circuit 2. Wireless Door Lock ECU	DI–813 IN–31
Warning operation will not be performed even if the panic button is pressed.	1. Panic Circuit 2. Wireless Door Lock ECU	DI–823 IN–31

DI05R–03

CIRCUIT INSPECTION

ECU Power Source Circuit

CIRCUIT DESCRIPTION

Battery positive voltage is always applied to the terminal +B of the wireless door lock ECU.

WIRING DIAGRAM

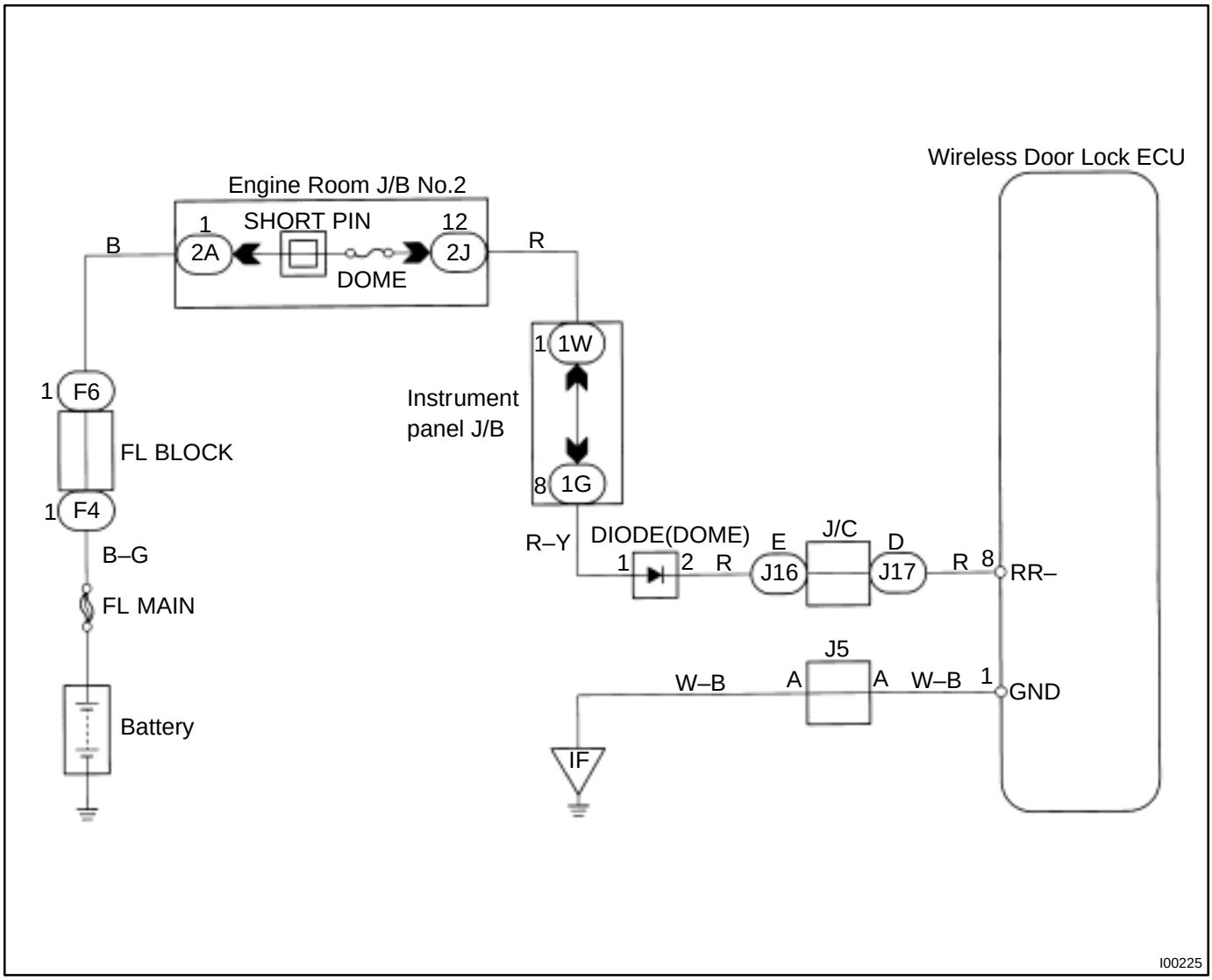

INSPECTION PROCEDURE

1	**Check DOME fuse.**

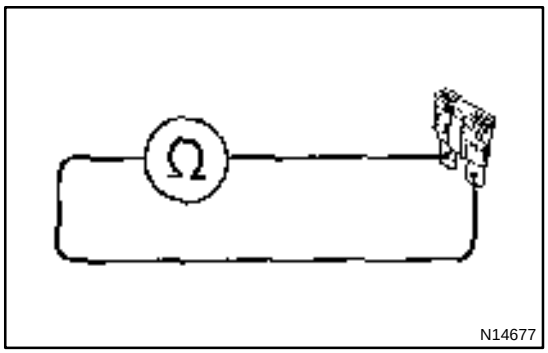

PREPARATION:
Remove DOME fuse from engine room junction block.
CHECK:
Check continuity of DOME fuse.
OK:
Below 1.0 Ω or continuity

NG → **Check for short in all the harness and components connected to DOME fuse. (See attached wiring diagram.)**

OK

2	**Check voltage between terminals +B and E of wireless door lock ECU connector.**

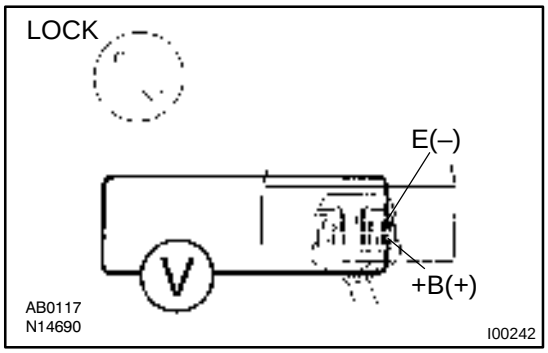

PREPARATION:
Remove the wireless door lock ECU from No.1 instrument panel brace.
CHECK:
Measure voltage between terminals +B and GND of wireless door lock ECU.
OK:
Voltage: 10 – 14 V

OK → **Proceed to next circuit inspection shown on problem symptoms table (See page DI–809).**

NG

3	**Check for open in harness and connector between terminal GND of wireless door lock ECU and body ground (See page IN–31).**

NG → **Repair or replace harness or connector.**

OK

Check and repair harness and connector between wireless door lock control ECU and battery.

DI05S–03

Door Unlock Detection Switch Circuit

CIRCUIT DESCRIPTION

The door unlock detection switch is built into the door lock motor assembly. The switch is OFF when the door lock knob is in Lock position, and is ON When the Knob is in Unlock position.
Furthermore, the door unlock detection switch circuit has terminal +B connected inside the theft deterrent ECU, when the door unlock detection switch is OFF, battery positive voltage is applied to the terminal of the door unlock detection switch circuit of the wireless door lock ECU.

WIRING DIAGRAM

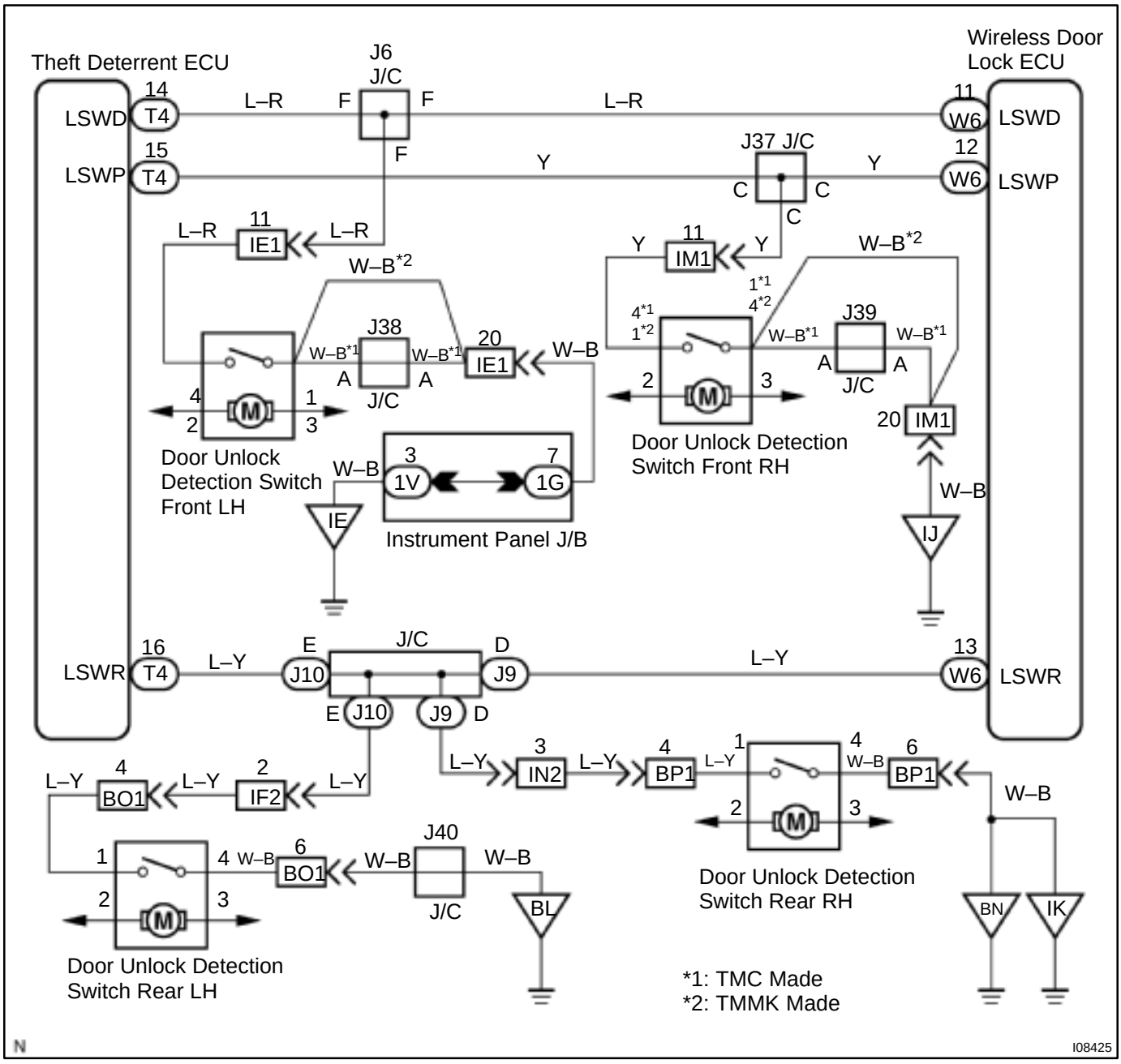

INSPECTION PROCEDURE

1	**Check voltage between terminals LSWD, LSWP and LSWR of wireless door lock ECU connector and body ground.**

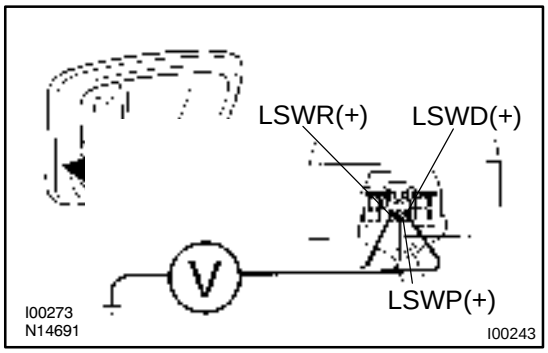

PREPARATION:

Remove the wireless door lock ECU from No.1 instrument panel brace.

CHECK:

Measure voltage between each of terminals LSWD, LSWP and LSWR of wireless door lock ECU connector and body ground, when the respective door lock knobs involved are pushed to the lock side.

OK:

Voltage 10 – 14 V

OK → **Proceed to next circuit inspection shown on problem symptoms table (See page DI–809).**

NG

Check and repair harness and connector between wireless door lock ECU and door unlock detection switch.

DI05T–03

Door Key Lock and Unlock Switch Circuit (Unlock Side)

CIRCUIT DESCRIPTION

The Key–operated switch is built into the door key cylinder. When the key is turned to the lock side, the lock terminal of the switch is grounded, and when the key is turned to the unlock side the unlock terminal is grounded.

Furthermore, the door key lock and unlock switch circuit has terminal +B connected inside the theft deterrent ECU, when neither the lock nor unlock terminal of the key lock and unlock switch are grounded, battery positive voltage is applied to the door key lock and unlock switch circuit of the wireless door lock ECU.

(Tr inside the ECU coming ON causes the wireless door lock ECU to output a signal to unlock all the doors.)

WIRING DIAGRAM

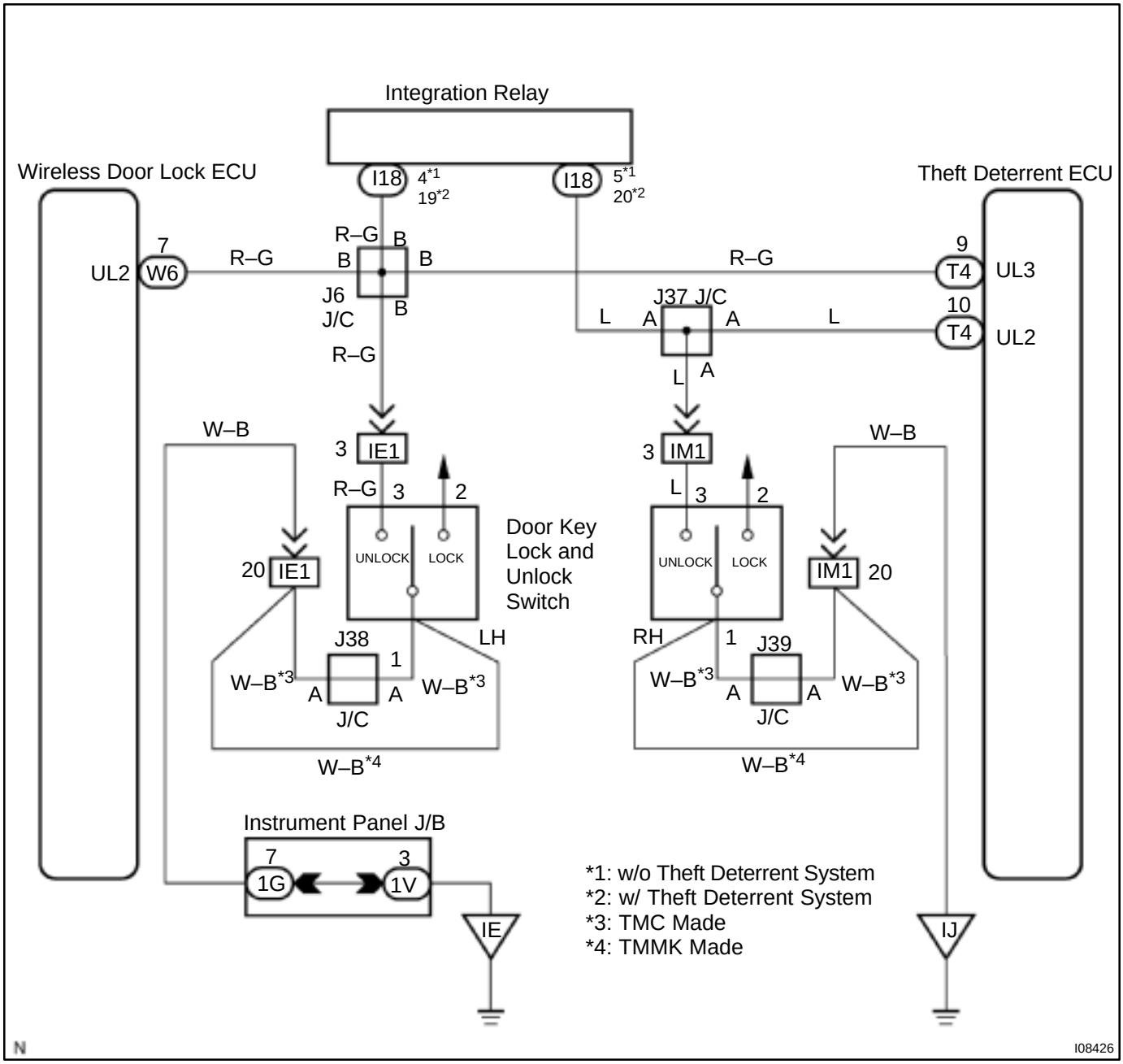

INSPECTION PROCEDURE

1	**Check voltage between terminals UL2 of wireless door lock ECU connector and body ground.**

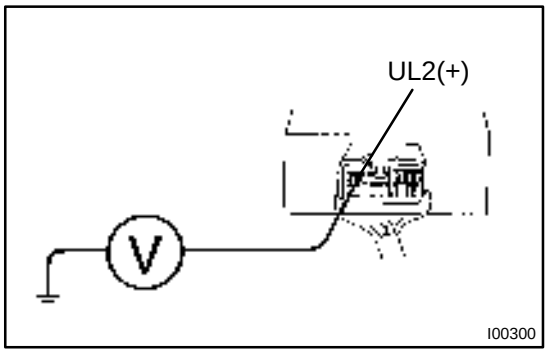

PREPARATION:

Remove the wireless door lock ECU from No.1 instrument panel brace.

CHECK:

Measure voltage between terminal UL2 of wireless door lock ECU connector and body ground.

OK:

Voltage: 10 – 14 V

OK → **Proceed to next circuit inspection shown on problem symptoms table (See page DI–809).**

NG → **Check and repair harness and connector between wireless door lock ECU and door key lock and unlock switch.**

DI05U–03

Door Key Lock and Unlock Switch Circuit (Lock Side)

CIRCUIT DESCRIPTION

Refer to page DI–815.

Tr inside the wireless door lock ECU coming ON causes the theft deterrent ECU to output a signal to lock all the doors.

WIRING DIAGRAM

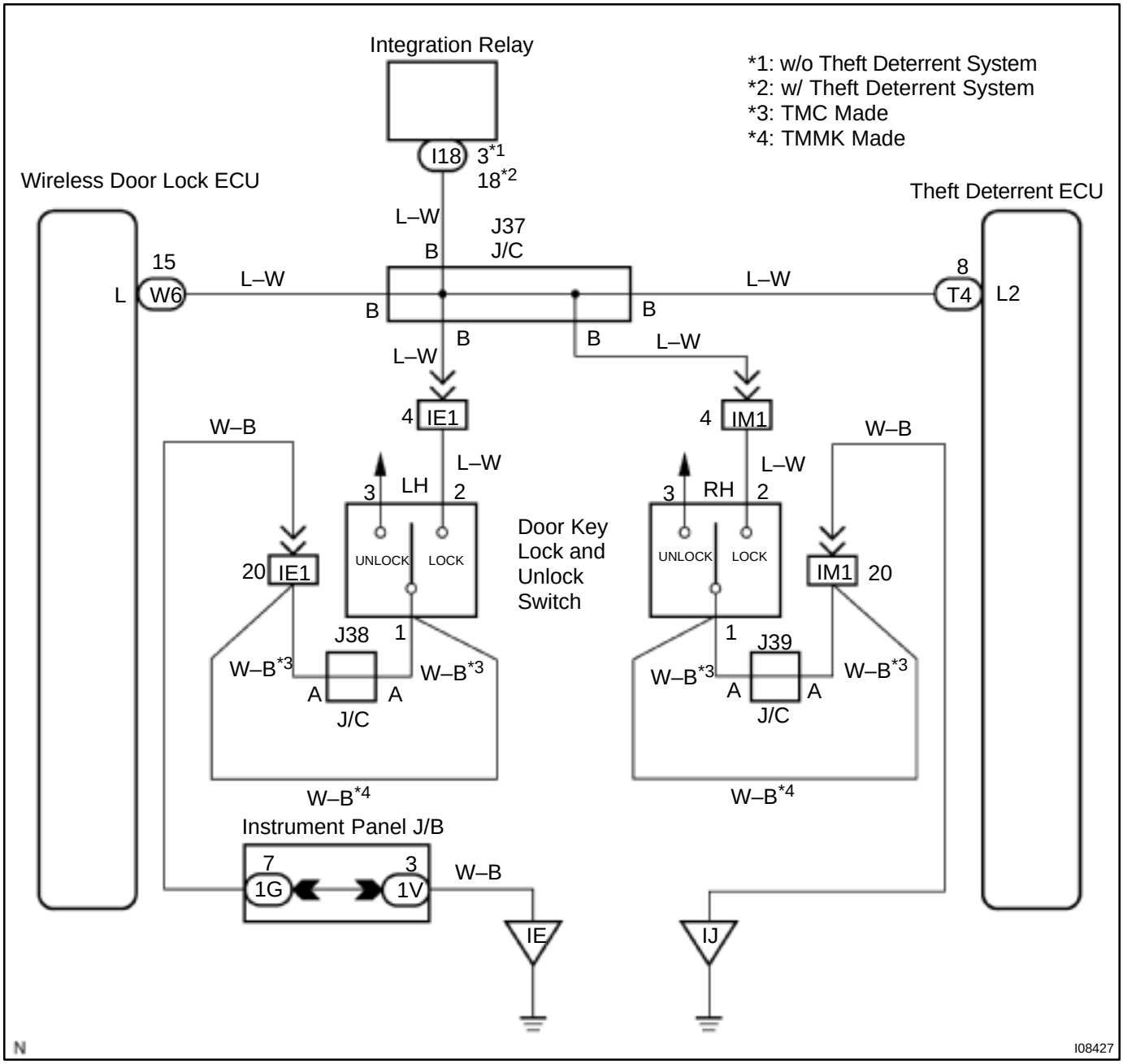

INSPECTION PROCEDURE

1	**Check voltage between terminal L of wireless door lock ECU connector and body ground.**

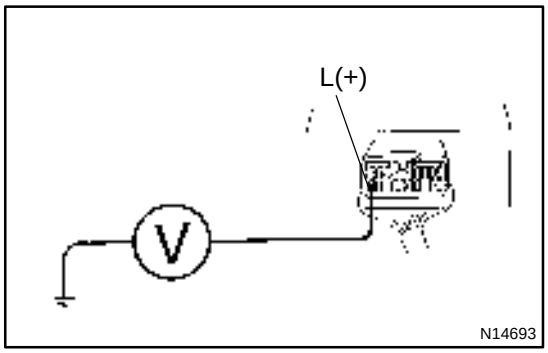

PREPARATION:
Remove the wireless door lock ECU from No.1 instrument panel brace.

CHECK:
Measure voltage between terminal L of wireless door lock ECU connector and body ground.

OK:

Voltage 10 – 14 V

OK → **Proceed to next circuit inspection shown on problem symptoms table (See page DI–809).**

NG

Check and repair harness and connector between wireless door lock ECU and door key lock and unlock switch.

DI05V–03

Key Unlock Warning Switch Circuit

CIRCUIT DESCRIPTION

When the key is inserted in the ignition key cylinder, the key unlock warning switch comes ON, and when the key is not inserted the switch is OFF.
When the key unlock warning switch is ON, the ECU operates the key confinement prevention function.

WIRING DIAGRAM

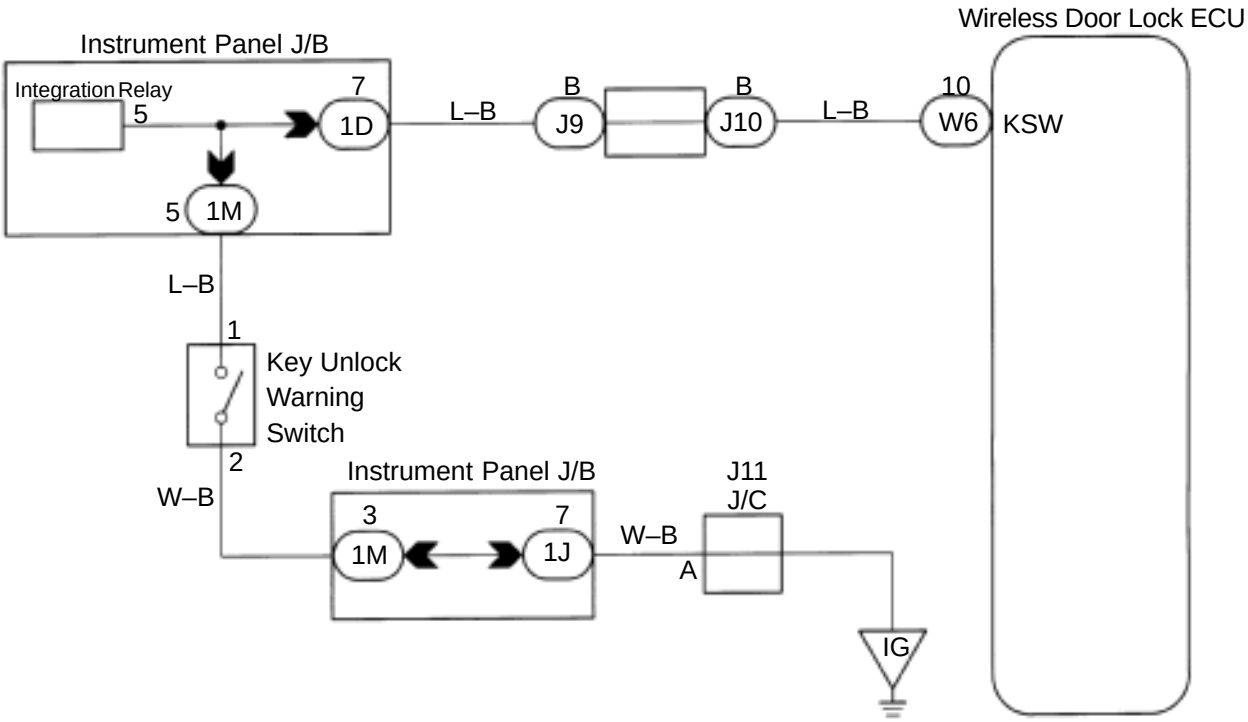

INSPECTION PROCEDURE

1	**Check voltage between terminal KSW of wireless door lock ECU connector and body ground.**

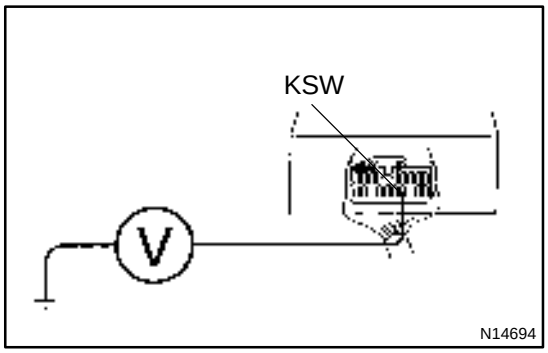

PREPARATION:

Remove the wireless door lock ECU from No.1 instrument panel brace.

CHECK:

Measure voltage between terminal KSW of wireless door lock ECU connector and body ground, when key plate is not inserted in the key cylinder.

OK:

Voltage: 10 – 14 V

OK

Proceed to next circuit inspection shown on problem symptoms table (See page DI–809).

NG

Check and repair harness and connector between wireless door lock ECU and key unlock warning switch.

DI05W–03

Door Courtesy Switch Circuit

CIRCUIT DESCRIPTION

The door courtesy switch comes ON when the door is opened and goes OFF when door is closed. Furthermore. the door courtesy switch circuit has terminal +B connected inside the theft deterrent ECU . Battery positive voltage is applied to terminal DSWD of the theft deterrent ECU when all doors are closed, i.e., when the door courtesy switches of all doors are OFF.

WIRING DIAGRAM

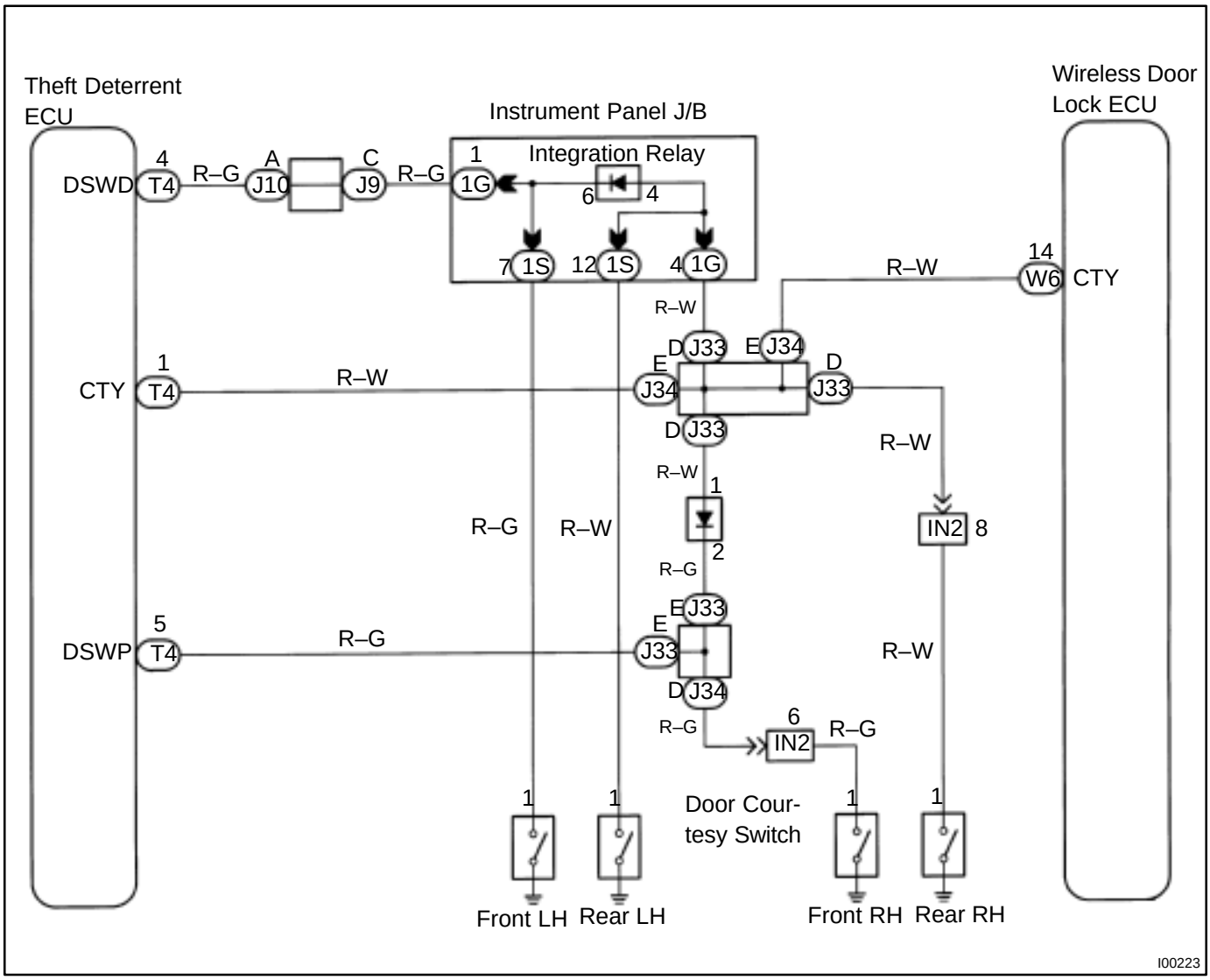

INSPECTION PROCEDURE

1	**Check operation of open door warning light.**

CHECK:

Check that open door warning light comes ON when each door is opened, and goes OFF when all doors are closed.

NG → **Check open door warning light circuit**

OK

2	**Check voltage between terminal CTY of wireless door lock ECU connector and body ground.**

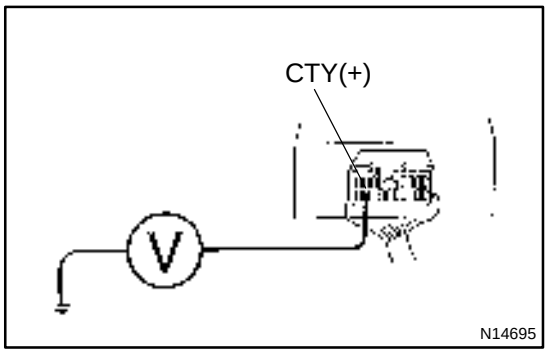

PREPARATION:

Remove the wireless door lock ECU from No.1 instrument panel brace.

CHECK:

Measure voltage between terminal CTY of wireless door lock ECU connector and body ground, when all doors are closed.

OK:

Voltage: 10 – 14 V

OK → **Proceed to next circuit inspection shown on problem symptoms table (See page DI–809).**

NG

Check and repair harness and connector between wireless door lock ECU and door courtesy switch.

DI05X–04

Panic Circuit

CIRCUIT DESCRIPTION

This circuit will transmit a panic signal from a wireless door lock ECU to a theft deterrent ECU.
When the key is not inserted in the ignition key cylinder and the theft deterrent ECU receives the panic signal from the wireless door lock ECU, warning operation will be performed.

WIRING DIAGRAM

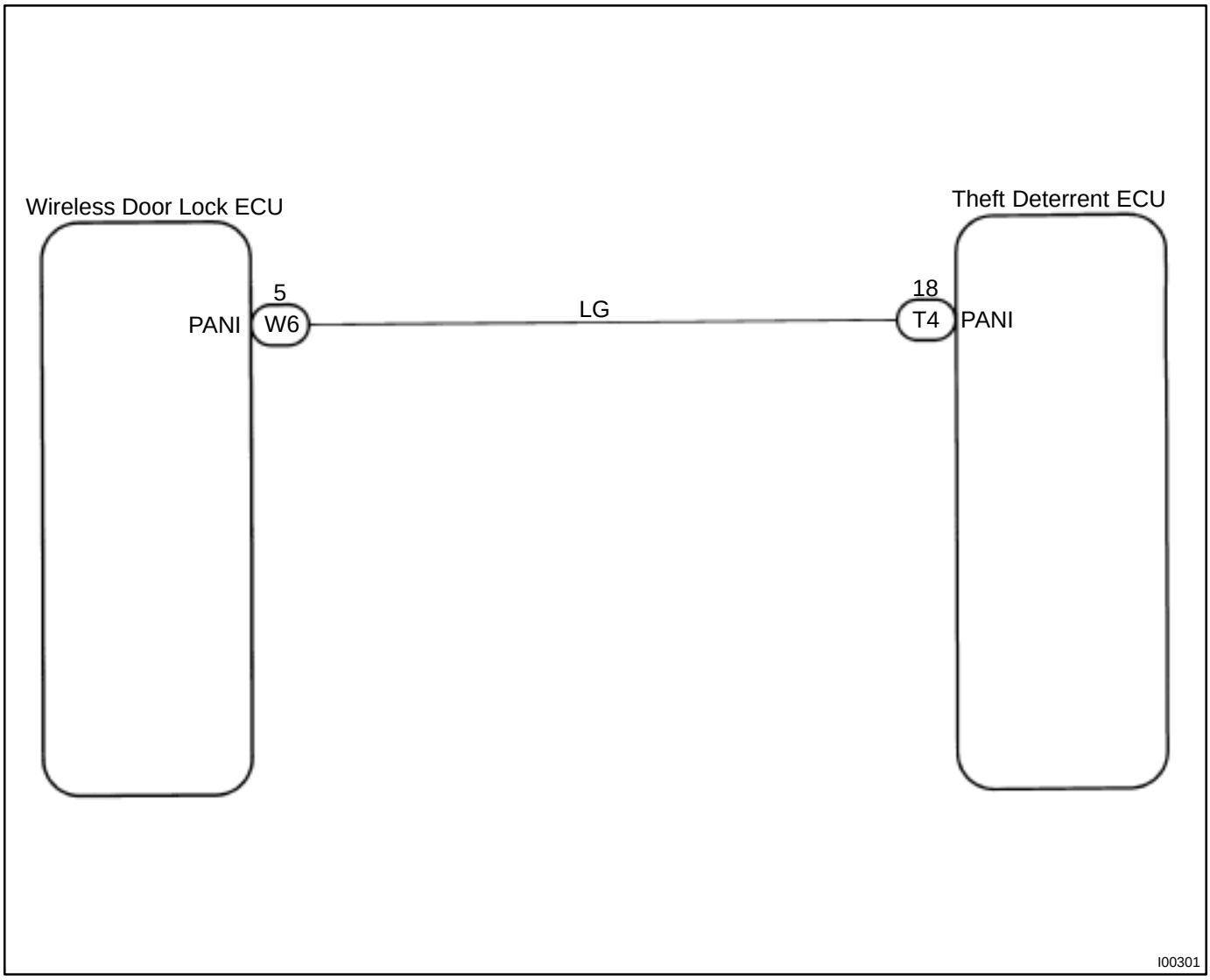

INSPECTION PROCEDURE

1	**Check voltage between terminal PANI of theft deterrent ECU connector and body ground.**

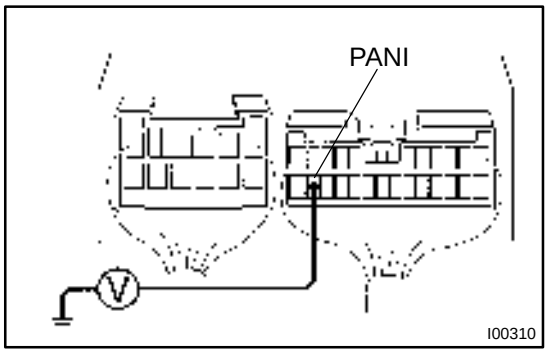

CHECK:
Measure voltage between terminal PANI of theft deterrent ECU connector and body ground.
OK:
Voltage: 4 – 6 V

OK	**Exchange theft deterrent ECU.**

NG

2	**Check the panic signal (Theft deterrent ECU side)**

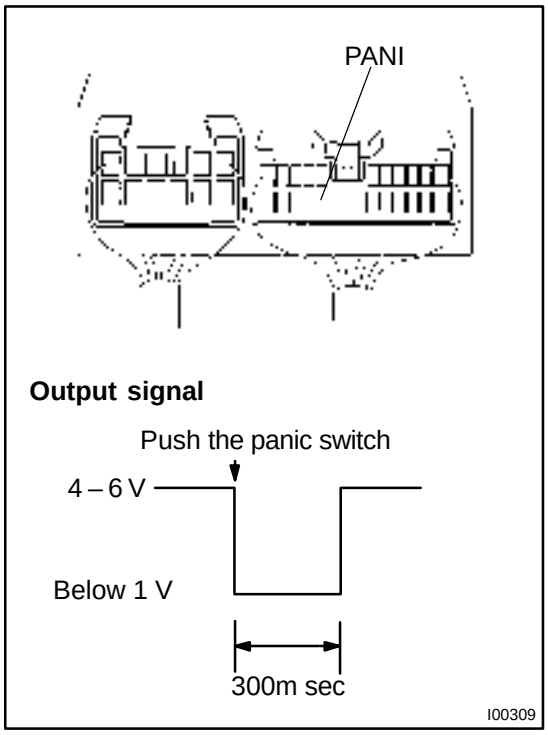

CHECK:
Check the signal of the terminal PANI when pushing the PANIC switch of the transmitter.

HINT:
Check the signal using the oscilloscope or oscilloscope function of TOYOTA hand–held tester.

OK:
Output the signal as shown in the illustration.

OK	**Exchange theft deterrent ECU.**

NG

3	Check the panic signal (Wireless door lock ECU side)

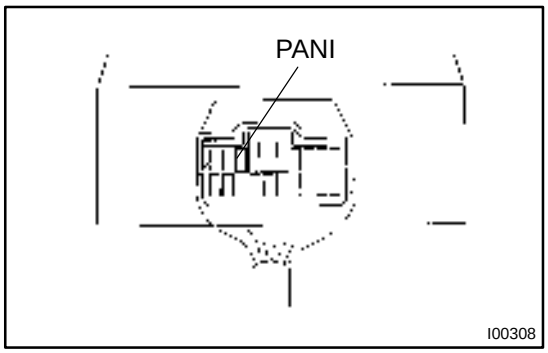

CHECK:

Check the signal of the terminal PANI when pressing the PANIC switch of the transmitter.

OK:

Output the signal shown on the previous page.

NG → **Proceed to next circuit inspection shown on problem symptoms table (See page DI–809).**

OK

Check and repair harness and connector between wireless door lock ECU and theft deterrent ECU.

THEFT DETERRENT SYSTEM

HOW TO PROCEED WITH TROUBLESHOOTING

DI06M–04

HINT:

Troubleshooting of the theft deterrent system is based on the premise that the door lock control system is operating normally. Accordingly, before troubleshooting the theft deterrent system, first make certain that the door lock control system is operating normally.

For troubleshooting use a volt/ohm meter.

Be sure to use troubleshooting procedure appropriate to the diagnostic tool being used.

Perform troubleshooting in accordance with the procedure on the following page.

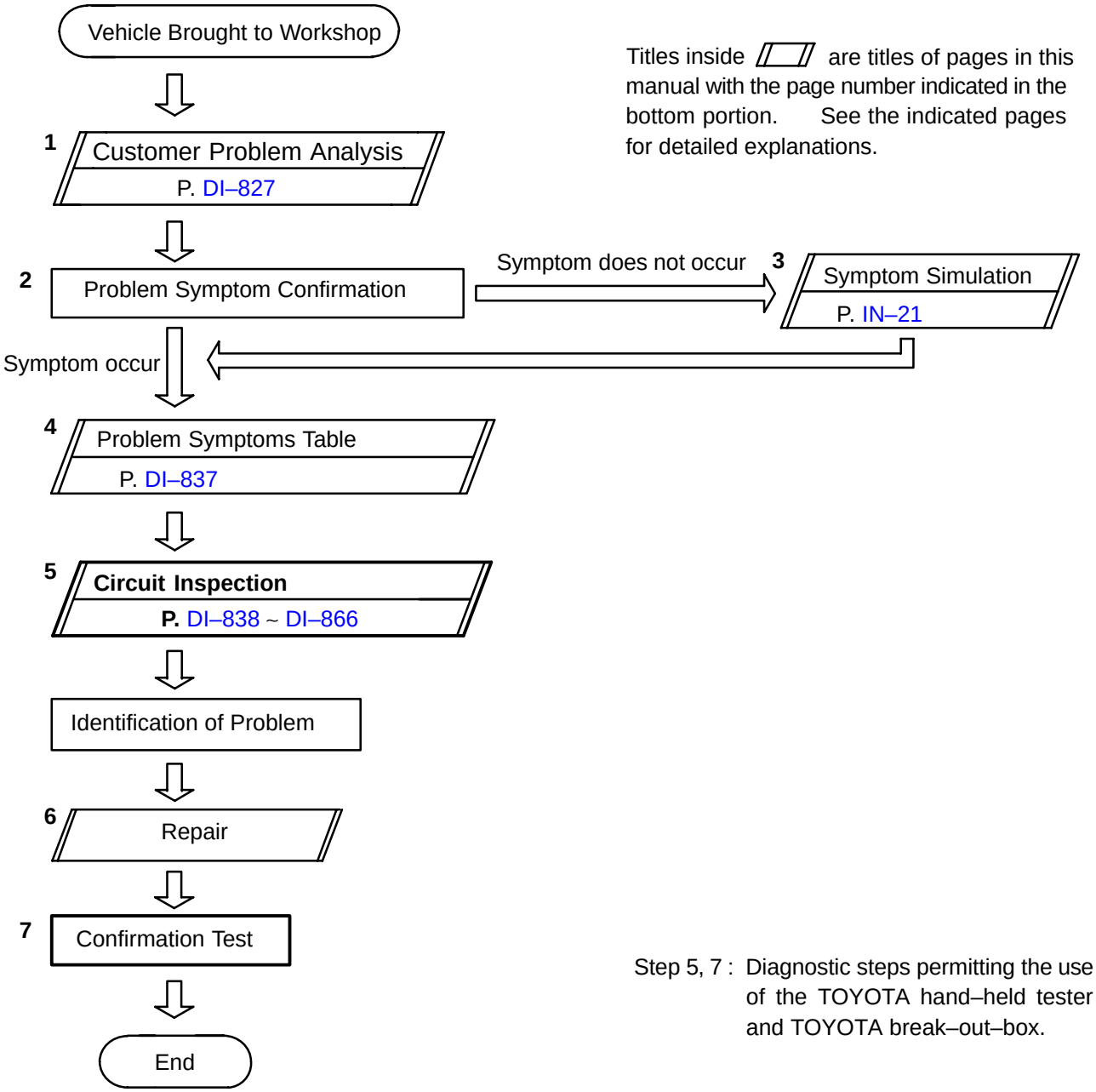

Titles inside ▱ are titles of pages in this manual with the page number indicated in the bottom portion. See the indicated pages for detailed explanations.

Step 5, 7 : Diagnostic steps permitting the use of the TOYOTA hand–held tester and TOYOTA break–out–box.

DI06N–05

CUSTOMER PROBLEM ANALYSIS CHECK

THEFT DETERRENT SYSTEM Check Sheet

Inspector's name: _____

Customer's Name		**Registration No.**	
		Registration Year	
		Frame No.	
Date of Vehicle Brought in	/ /	**Odometer Reading**	**km Mile**

Date Problem First Occurred		/ /
Frequency Problem Occurs		● Constant ● Sometimes (Times per day, month) ● Once only
Weather Conditions When Problem Occurred	**Weather**	● Fine ● Cloudy ● Rainy ● Snowy ● Various/Others
	Outdoor temperature	● Hot ● Warm ● Cool ● Cold (Approx. °F (°C))

Problem Symptom

● Theft deterrent system cannot be set.		
● Indicator light does not flash when the theft deterrent system is set. (It stays on or does not light at all.)		
● Theft deterrent system does not operate.	● When unlocked using the door lock knob. ● When the engine hood is opened.	<u>Malfunction</u> ● Horns only ● Theft deterrent horn only ● Headlights only ● Taillights only ● Starter cut only ● Door lock operation only
● System cannot be canceled once set.	● When door is unlocked using key or wireless door lock control system. ● When the key is inserted in the ignition key cylinder and turned to ACC or ON position. (However, only when the system has never operated) ● When the luggage compartment door is opened with the key.	
● System cannot be canceled during warning operation.	● When door is unlocked using key or wireless door lock control system. ● When the key is inserted in the ignition key cylinder and turned to ACC or ON position.	
● Warning operation starts when the system is set and the door or luggage compartment door is opened with the key.		
● Others.		

DI1KU–02

PRE–CHECK

1. Active arming mode:

SETTING THE THEFT DETERRENT MODE

The system will be automatically set to the theft deterrent mode about 30 seconds after the setting processes listed below are performed.

Setting Processes: (do processes (1)～(4) in the order)

(1) Remove the ignition key from the key cylinder.

(2) Close all entry points (door, hood and luggage compartment door).

(3) Use any one of the following methods to lock all the doors depending on a given condition.

- □ Use the key to lock the driver or passenger side door. (as a result, all the doors(including the engine hood and luggage compartment door) will be closed and locked), or
- □ Use the remote control to lock any door (as a result, all the doors(including the engine hood and luggage compartment door) will be closed and locked), or
- □ If the front right or left door is unlocked when both the rear doors are already locked, lock and close the remaining unlocked door by hand (as a result, all the doors(including the engine hood and luggage compartment door) will be closed and locked).
- □ Close all doors and lock with the engine hood or luggage compartment door opened, and close the engine hood or all the doors(including the engine hood and luggage compartment door).

(4) About 30 seconds after the above process (3), the theft deterrent mode will automatically start.

HINT:

The closing/locking of all the entry points (doors, hood and luggage) must remain unchanged for about 30 seconds, the system will start the theft deterrent mode.

2. Passive arming mode:

SETTING THE THEFT DETERRENT MODE

The system will be automatically set to the theft deterrent mode about 30 seconds after the setting processes listed below are performed.

Setting Processes:

(1) Remove the ignition key from the key cylinder.

(2) Open and close any entry points (door, hood and luggage compartment door).
Now, all the entry points are closed.

(3) About 30 seconds after the process–(2), on the previous page the Theft Deterrent mode will automatically start.

HINT:

If, while following above steps, you use the key or the remote control to lock the door, the system will be set to ACTIVE ARMING MODE.

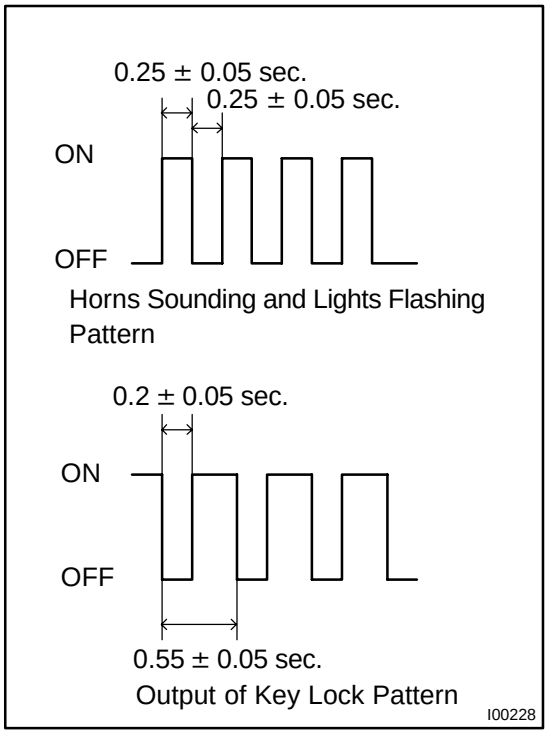

3. THEFT DETERRENT OPERATION

When the system is set to the theft deterrent mode and any of the following conditions are met, the system sounds the horns and flashes the headlights and the taillights for about 1 minute. At the same time locks all doors (If all doors are not locked at once, the system repeats door locking operation every 0.55 seconds during the one–minute alarm time).

Condition

(1) Any of the doors (Including the engine hood and luggage compartment door) is unlocked or opened without the key. *1

(2) The battery terminal is disconnected and reconnected. *2

(3) The system receives panic signal from remote keyless entry. *3

*1: Only active arming mode.

*2: When the ignition key is not inserted in the key cylinder.

4. CANCELLATION OF THEFT DETERRENT OPERATION OR MODE

The theft deterrent operation of mode can be cancelled when any of the following conditions is met.

No.	Condition	Cancel of Operation	Cancel of Mode
1	Unlock front doors with the key	Effective	Effective
2	Unlock doors with remote keyless entry	Effective	Effective
3	Insert key into ignition key cylinder and turn it to ACC or ON position	Effective	Effective
4	About 1 minute passes after theft deterrent operation begins	Automatic stop *1	–
5	Unlock the luggage compartment door with the key or keyless entry.	Uneffective	Effective
6	Unlock the luggage compartment door with the keyless entry.	Uneffective	Effective
7	If the system receives panic signal again or unlock signal when the system is activated by panic signal	Effective *2	Uneffective
6	If the system receives unlock signal when the system is activated by panic signal	Effective	Effective

*1: The system is set to the theft deterrent mode again in about 2 seconds after the operation stops, if all doors are closed.
*2: The alarm caused by the panic signal malces the system in the previous condition.

Security only:

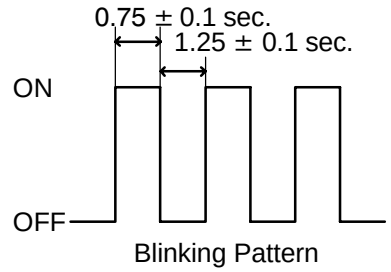

5. INDICATOR LIGHT (LED)

The indicator light functions as shown below according to the system condition in the theft deterrent mode. It remains OFF in the initial state.

System Condition	Indicator Light
During set preparation time	ON
When the mode is set*	OFF
When alarm is activated	ON
When the system is temporally cancelled*	OFF

*: The indicator flashes with the output from the immobiliser.

6. KEEPING POWER SUPPLY FUNCTION IN CASE OF DOME FUSE OPEN

Even if the dome fuse blows open on the theft deterrent mode, the system will keep working on the theft deterrent mode.

7. CHANGING METHOD OF PASSIVE MODE (ON or OFF)

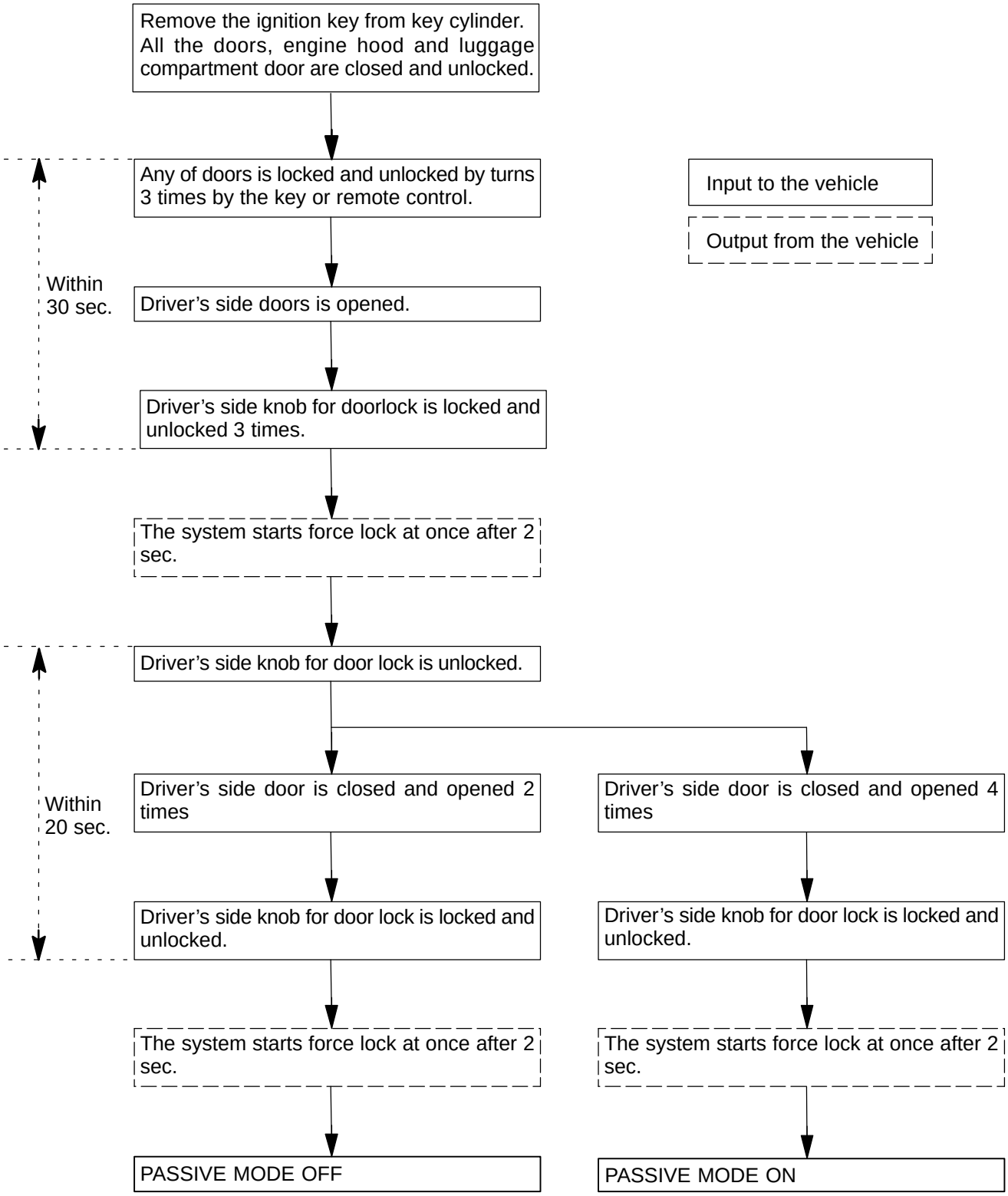

HINT:
- Initial mode is PASSIVE MODE OFF.
- If there is a different signal in the middle of changing, it is invalied.

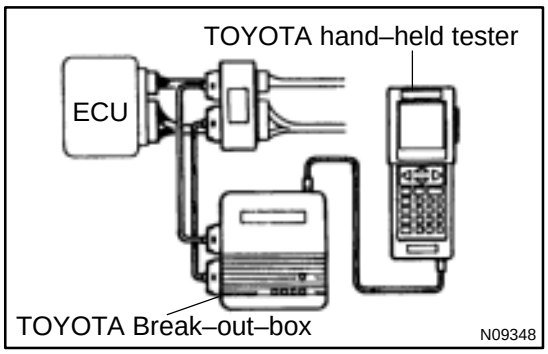

8. ECU TERMINAL VALUES MEASUREMENT BY USING TOYOTA BREAK–OUT–BOX AND TOYOTA HAND–HELD TESTER

(a) Hook up the TOYOTA break–out–box and TOYOTA hand–held tester to the vehicle.

(b) Read the ECU input/ output values by following the prompts on the tester screen.

HINT:

TOYOTA hand–held tester has a ”Snapshot” function.

This records the measured values and is effective in the diagnosis of intermittent problems.

Please refer to the TOYOTA hand–held tester / TOYOTA break–out–box operator’s manual for further details.

DI06P–05

PARTS LOCATION

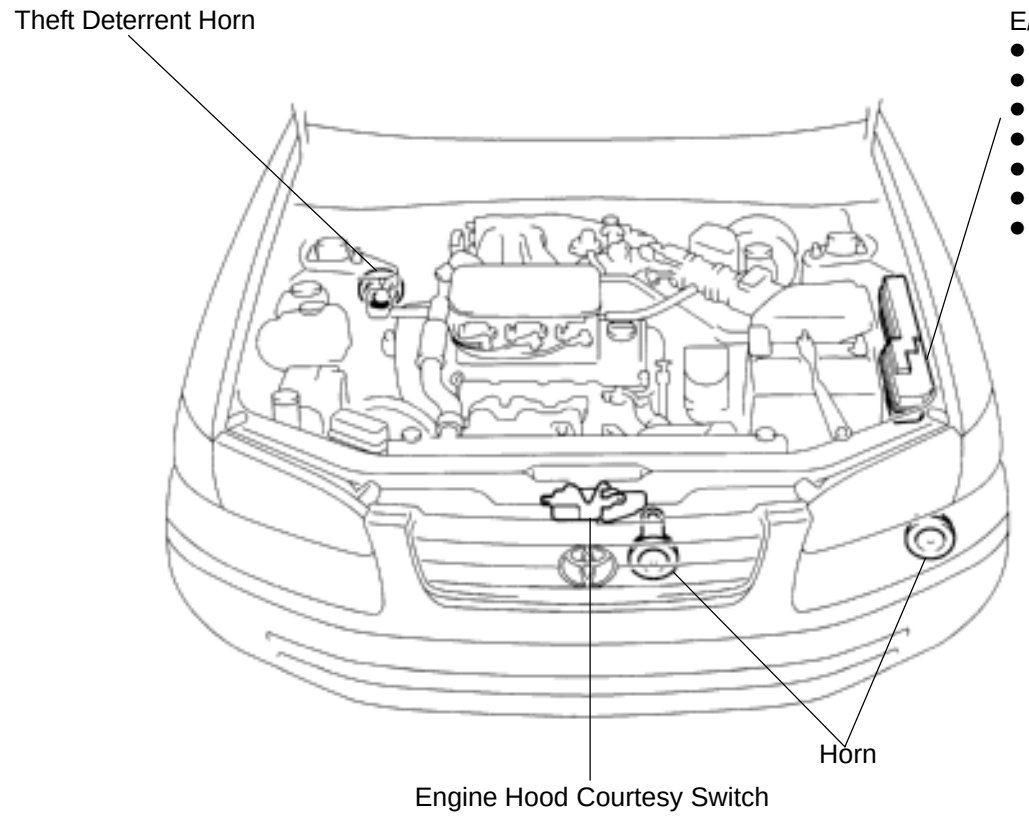

I00233

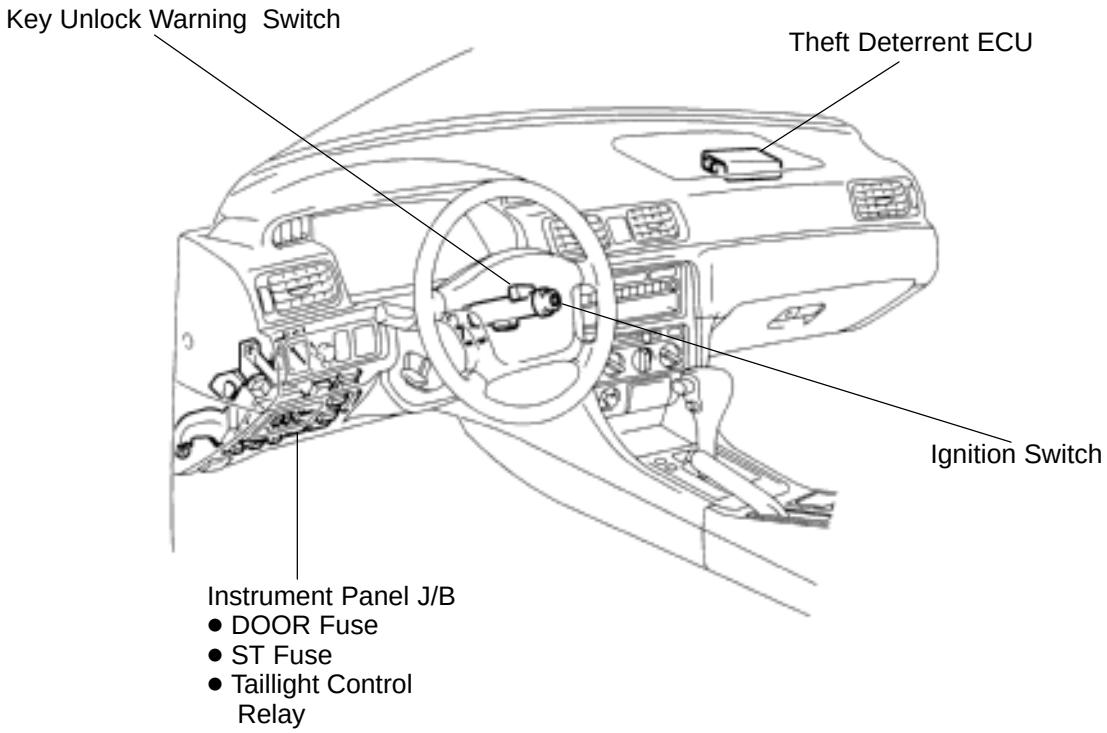

I00234

I00236

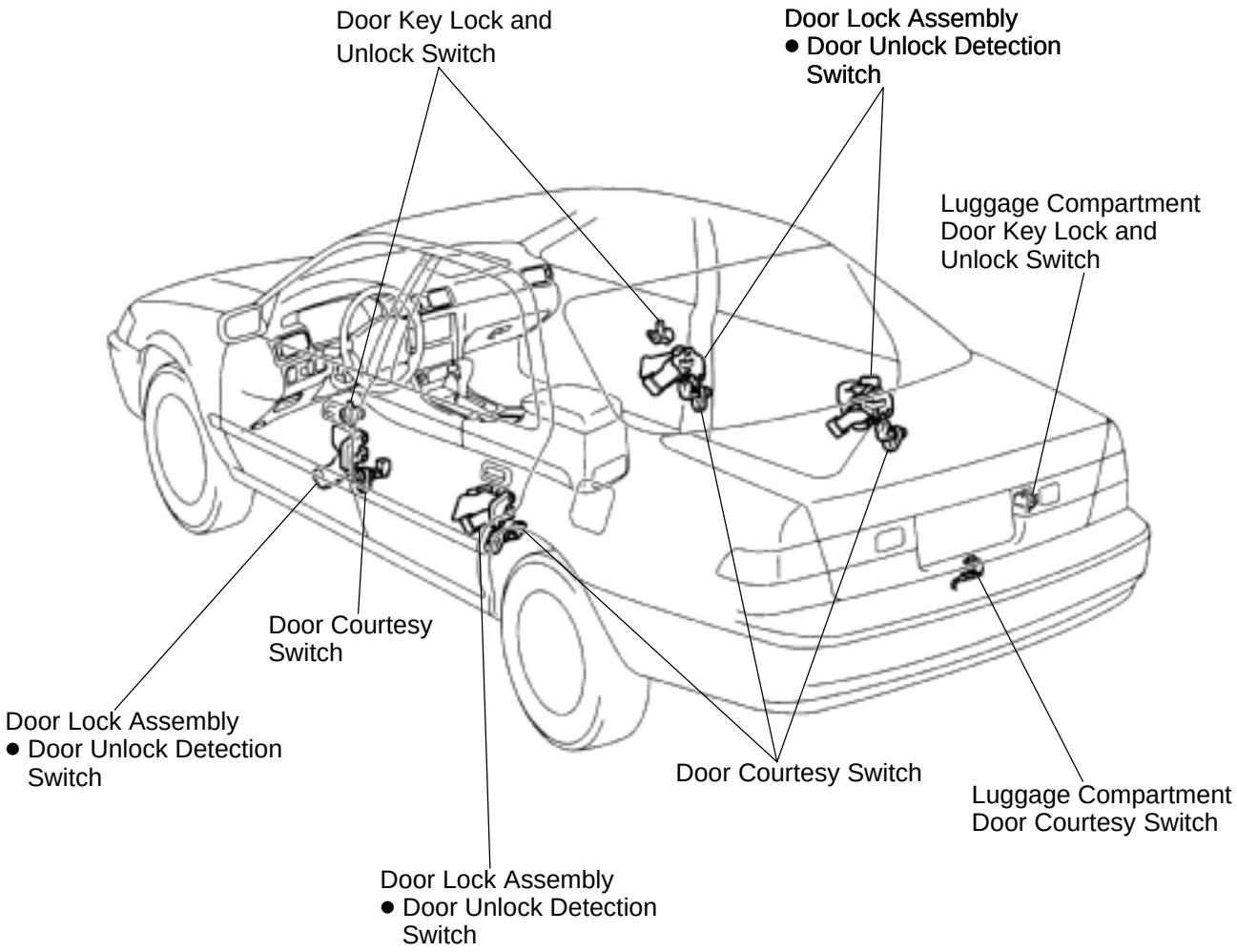
Door Key Lock and Unlock Switch
Door Lock Assembly
● Door Unlock Detection Switch
Luggage Compartment Door Key Lock and Unlock Switch
Door Courtesy Switch
Door Lock Assembly
● Door Unlock Detection Switch
Door Courtesy Switch
Luggage Compartment Door Courtesy Switch
Door Lock Assembly
● Door Unlock Detection Switch
I00235

DI1KV–03

TERMINALS OF ECU

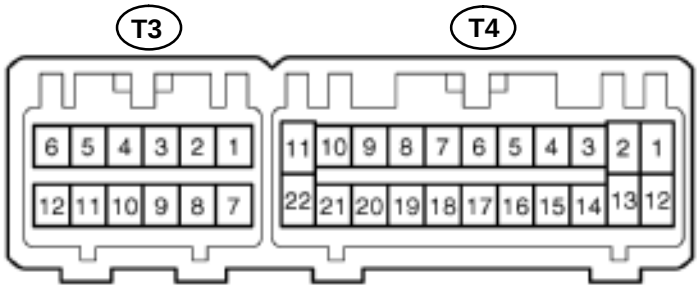

I01920

Symbols (Terminals No.)	Wiring Color	Condition	STD Value
CTY ↔ E (T4–1 ↔ T3–7)	R–W ↔ W–B	Door courtesy switch ”ON” (Rear door opened)	Below 1 Ω
		Door courtesy switch ”OFF” (Rear door closed)	1 MΩ or higher
DSWL ↔ E (T4–2 ↔ T3–7)	R–Y ↔ W–B	Luggage compartment door courtesy switch ”ON” (Luggage compartment door opened)	Below 1 Ω
		Luggage compartment door courtesy switch ”OFF” (Luggage compartment door closed)	1 MΩ or higher
DSWH ↔ E (T4–3 ↔ T3–7)	B ↔ W–B	Engine hood courtesy switch ”ON” (Engine hood opened)	Below 1 Ω
		Engine hood courtesy switch ”OFF” (Engine hood closed)	1 MΩ or higher
DSWD ↔ E (T4–4 ↔ T3–7)	R–G ↔ W–B	Door courtesy switch ”ON” (Driver’s door opened)	Below 1 Ω
		Door courtesy switch ”OFF” (Driver’s door Closed)	1 MΩ or higher
DSWP ↔ E (T4–5 ↔ T3–7)	R–G ↔ W–B	Door courtesy switch ”ON” (Passenger's door opened)	Below 1 Ω
		Door courtesy switch ”OFF” (Passenger’s door closed)	1 MΩ or higher
KSW ↔ E (T4–6 ↔ T3–7)	L–B ↔ W–B	Key unlock warning switch ”ON” (Key inserted)	Below 1 Ω
		Key unlock warning switch ”OFF” (Key removed)	1 MΩ or higher
LUG ↔ E (T4–7 ↔ T3–7)	G–W ↔ W–B	Luggage compartment door key lock and unlock switch ”ON”	Below 1 Ω
		Luggage compartment door key lock and unlock switch ”OFF”	1 MΩ or higher
L2 ↔ E (T4–8 ↔ T3–7)	L–W ↔ W–B	Door key lock and unlock switch ”LOCK” (Driver’s and passenger’s doors)	Below 1 Ω
		Door key lock and unlock switch ”UNLOCK” (Driver’s and passenger’s doors)	1 MΩ or higher
UL3 ↔ E (T4–9 ↔ T3–7)	R–G ↔ W–B	Door key lock and unlock switch ”UNLOCK” (Driver’s door)	Below 1 Ω
		Door key lock and unlock switch ”LOCK” (Driver’s door)	1 MΩ or higher
UL2 ↔ E (T4–10 ↔ T3–7)	L ↔ W–B	Door key lock and unlock switch ”UNLOCK” (passenger’s door)	Below 1 Ω
		Door key lock and unlock switch ”LOCK” (passenger’s door)	1 MΩ or higher

+B1 ↔ Body ground (T4–12 ↔ Body ground)	R ↔ W–B	Always	10 – 14 V
IG ↔ E (T4–13 ↔ T3–7)	B–R ↔ W–B	Ignition switch is turned to ”ON” position	10 – 14 V
LSWD ↔ E (T4–14 ↔ T3–7)	L–R ↔ W–B	Door unlock detection switch ”ON” (Driver’s door)	Below 1 Ω
		Door unlock detection switch ”OFF” (Driver’s door)	1 MΩ or higher
LSWP ↔ E (T4–15 ↔ T3–7)	Y ↔ W–B	Door unlock detection switch ”ON” (Passenger's door)	Below 1 Ω
		Door unlock detection switch ”OFF” (Passenger's door)	1 MΩ or higher
LSWR ↔ E (T4–16 ↔ T3–7)	L–Y ↔ W–B	Door unlock detection switch ”ON” (Rear door)	Below 1 Ω
		Door unlock detection switch ”OFF” (Rear door)	1 MΩ or higher
PANI ↔ E (T4–18 ↔ T3–7)	LG ↔ W–B	It is receiving panic signal from remote keyless entry	Below 1 Ω
		Except above mention	1 MΩ or hegher
+B2 ↔ Body ground (T3–1 ↔ Body ground)	L–W ↔ Body ground	Always	10 – 14 V
IND ↔ E (T3–6 ↔ T3–7)	R–Y ↔ W–B	During set preparation	3 – 5 V
E ↔ Body ground (T3–7 ↔ Body ground)	W–B ↔ Body ground	Always	10 – 14 V
SH ↔ E (T3–9 ↔ T3–7)	W–L ↔ W–B	Always	10 – 14 V
HEAD ↔ E (T3–10 ↔ T3–7)	R–B ↔ W–B	Light control switch ”HEAD”	10 – 14 V
TAIL ↔ E (T3–11 ↔ T3–7)	G–R ↔ W–B	Light control switch ”TAIL” or ”HEAD”	10 – 14 V
HORN ↔ E (T3–12 ↔ T3–7)	G–B ↔ W–B	Horn switch ”OFF”	10 – 14 V

DI06R–06

PROBLEM SYMPTOMS TABLE

Proceed to the reference page shown in the matrix chart below for each malfunction symptom and troubleshoot for each circuit.

HINT:

Troubleshooting of the theft deterrent system is based on the premise that the door lock control system is operating normally. Accordingly, before troubleshooting the theft deterrent system, first make certain that the door lock control system is operating normally.

Details of Problem			Inspecting Circuit*1	See page
The theft deterrent system cannot be set			1. Indicator light circuit	DI–838
			2. ECU power source circuit	DI–840
			3. Key unlock warning switch circuit	DI–853
			4. Luggage compartment door key lock and unlock switch circuit	DI–855
			5. Luggage compartment door courtesy switch circuit	DI–858
			6. Door key lock and unlock switch circuit	DI–855
			7. Door courtesy switch circuit	DI–864
			8. Door unlock detection switch circuit	DI–862
			9. Engine hood courtesy switch circuit	DI–866
The indicator light does not blink when system is set			Indicator light circuit	DI–838
When the system is set	When the rear doors are unlocked	The system does not operate	Door unlock detection switch circuit	DI–862
	When the luggage compartment door is opened by a method other than the key		Luggage compartment door courtesy switch circuit	DI–858
	When the engine hood is opened		Engine hood courtesy switch circuit	DI–866
While the system is in warning operation	Horns do not sound		Horn relay circuit	DI–845
	Theft deterrent horn does not sound		Theft deterrent horn circuit	DI–843
	Headlights do not flash		Headlight control relay circuit	DI–847
	Taillights do not flash		Taillight control relay circuit	DI–849
	The door lock is not locked in unlock condition		Door unlock detection switch circuit	DI–862
When the system is set	It is not canceled when the ignition key is turned to ACC or ON position		Ignition switch circuit	DI–851
	It still operates when the luggage compartment door is opened with the key		Luggage compartment door key lock and unlock switch circuit	DI–855
System is still set even when a rear door is open			Door courtesy switch circuit	DI–864
Even when the system is not set	Horns sound		Horn relay circuit	DI–845
	Theft deterrent horn sounds		Theft deterrent horn circuit	DI–843
	Headlights stay on		Headlight control relay circuit	DI–847
	Taillights stay on		Taillight control relay circuit	DI–849

*1: If numbers are given to the circuit proceed with troubleshooting in the order indicated by those numbers.

DI06S–04

CIRCUIT INSPECTION

Indicator Light Circuit

CIRCUIT DESCRIPTION

When the theft deterrent system is preparing to set, this circuit lights up the indicator light. When the system has been set, it continuously turns the indicator light on for 1 second and turns it off for 1 second, thus blinking the indicator light.

WIRING DIAGRAM

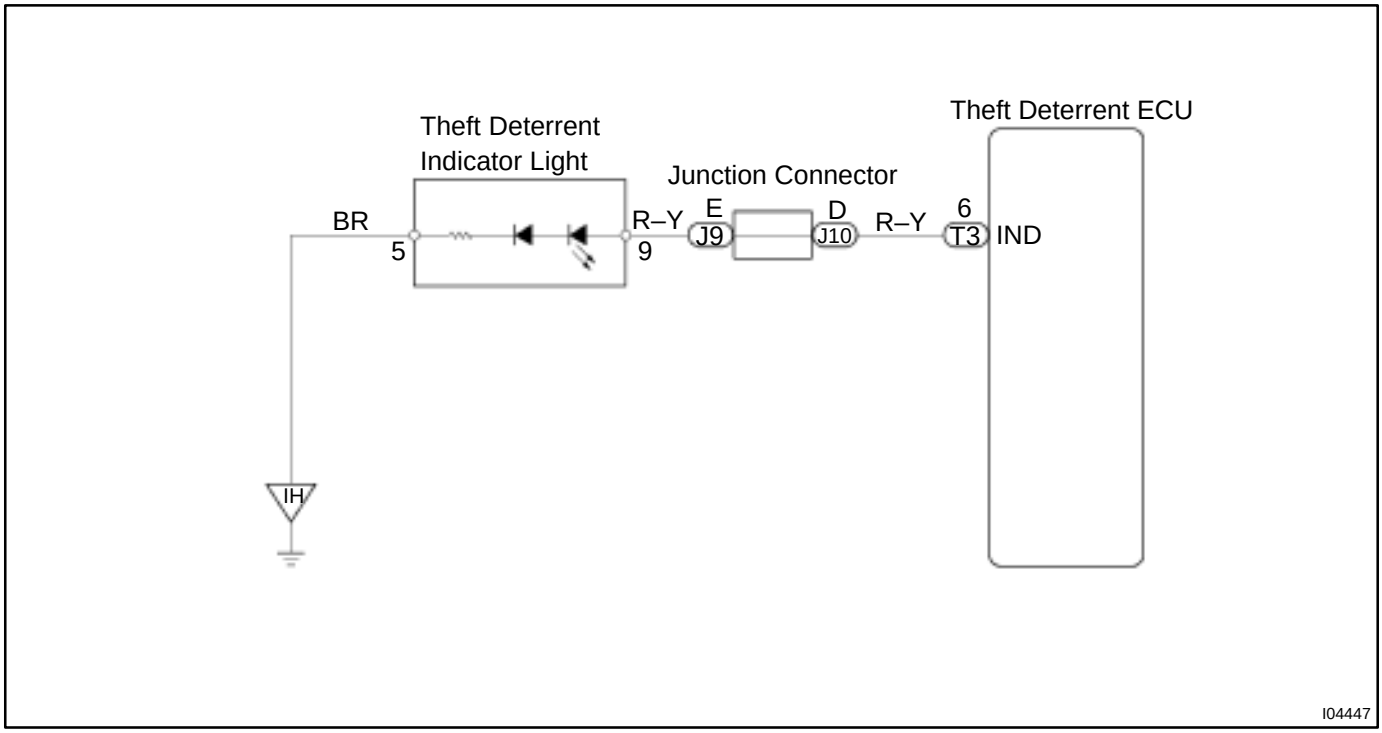

INSPECTION PROCEDURE

1	**Check indicator light.**

PREPARATION:

Remove combination meter.

CHECK:

Connect the positive (+) lead from the battery to terminal C9 and the negative (–) lead to terminal B16 of combination meter connector then check indicator light comes ON.

(See combination meter on page BE–46)

NG → **Replace combination meter.**

OK

2	**Check harness and connector between theft deterrent ECU and indicator light, indicator light and body ground (See page IN–31).**

NG → **Repair or replace harness or connector.**

OK

Check and replace theft deterrent ECU.*1

*1: When there is a malfunction that the theft deterrent system cannot be set, proceed to the next numbered circuit inspection shown on problem symptoms table (See page DI–837).

DI06T–06

ECU Power Source Circuit

CIRCUIT DESCRIPTION

This circuit provides power to operate the theft deterrent ECU.

WIRING DIAGRAM

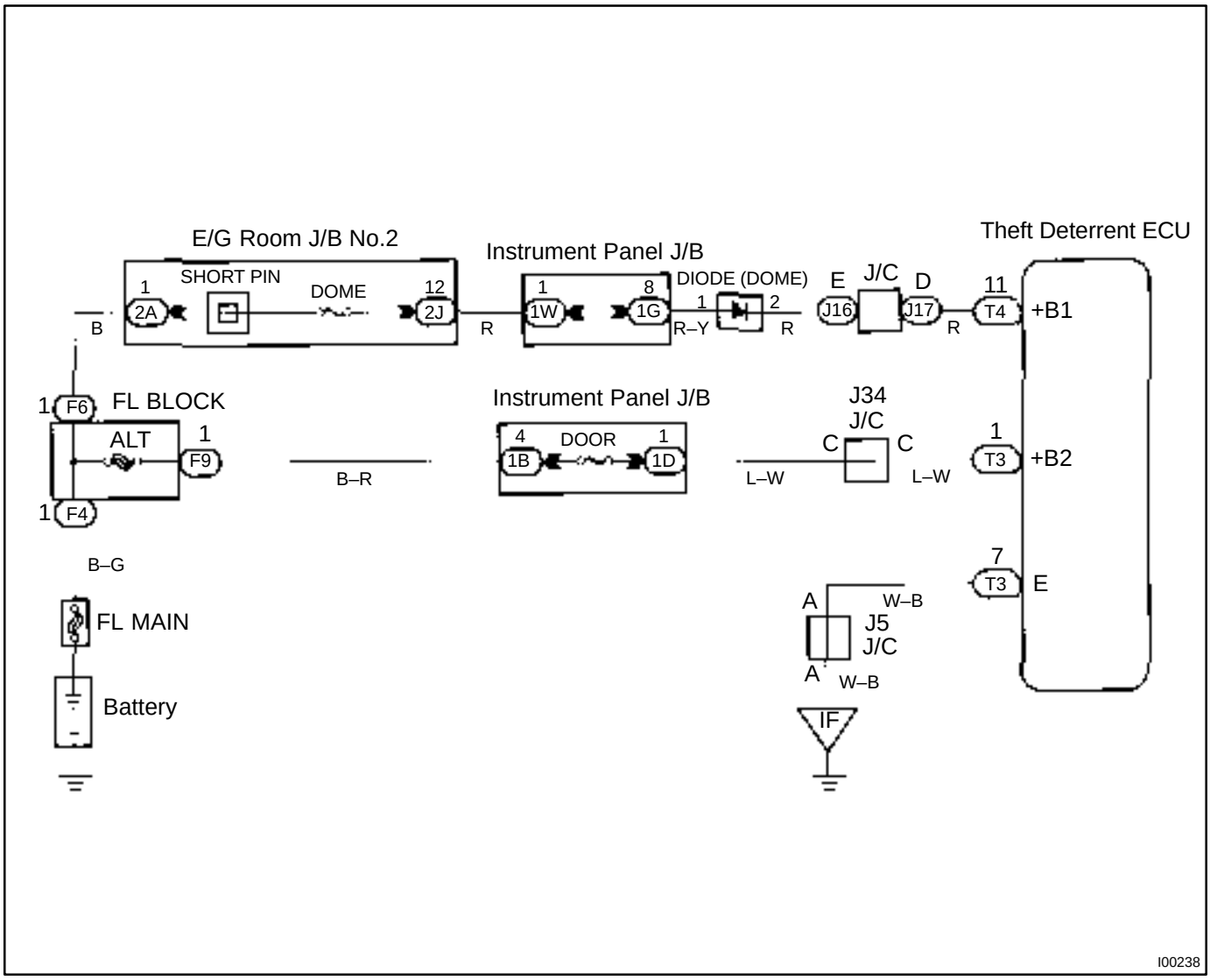

INSPECTION PROCEDURE

1	**Check DOME and DOOR fuses.**

E/G room J/B No.2:

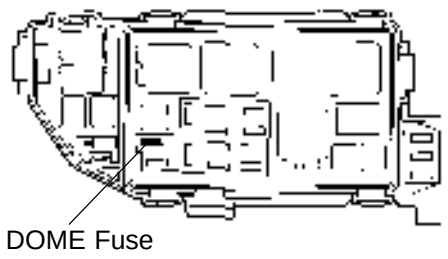

Instrument panel J/B:

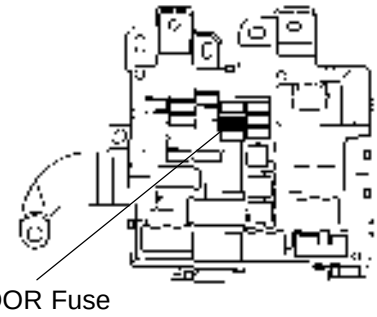

I00268
I00269
I00275

PREPARATION:

(a) Remove DOME fuse from engine room junction block No.2.

(b) Remove DOOR fuse from instrument panel junction block No.1.

CHECK:

Check continuity of DOME and DOOR fuses.

OK:

Continuity

NG → **Check for short in all the harness and components connected to the DOME and DOOR fuses (See attached wiring diagram).**

OK

2	**Check voltage between terminals each of +B1 and +B2 and E of theft deterrent ECU connector.**

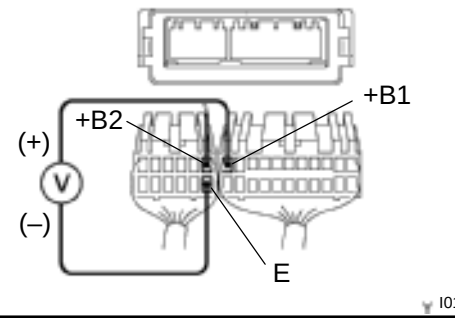

I01922

PREPARATION:

Disconnect the theft deterrent ECU connector.

CHECK:

Measure voltage between terminals each of +B1 and +B2 and E of theft deterrent ECU connector.

OK:

Voltage: 10 – 14 V

OK → **Proceed to next circuit inspection shown on problem symptoms table (See page DI–837).**

NG

3	**Check for open in harness and connector between ECU and body ground (See page IN–31).**

NG → **Repair or replace harness or connector.**

OK

Check and repair harness and connector between ECU and battery.

DI06V–06

Theft Deterrent Horn Circuit

CIRCUIT DESCRIPTION

When the theft deterrent system is activated, the relay in the ECU turns ON and OFF cycles of approximately 0.2 sec., causing the theft deterrent horn to blow (See the wiring diagram below).
In this condition, if any of the following operations is done, the relay in the ECU turns OFF, thus stopping the theft deterrent horn from blowing:

(1) Unlock the front LH or RH door with key.
(2) Turn the ignition switch to ACC or ON position.
(3) Unlock the doors with the wireless door lock control system.
(4) Wait for approximately 60 seconds.
(5) Push the panic switch of the wireless door lock control system.

WIRING DIAGRAM

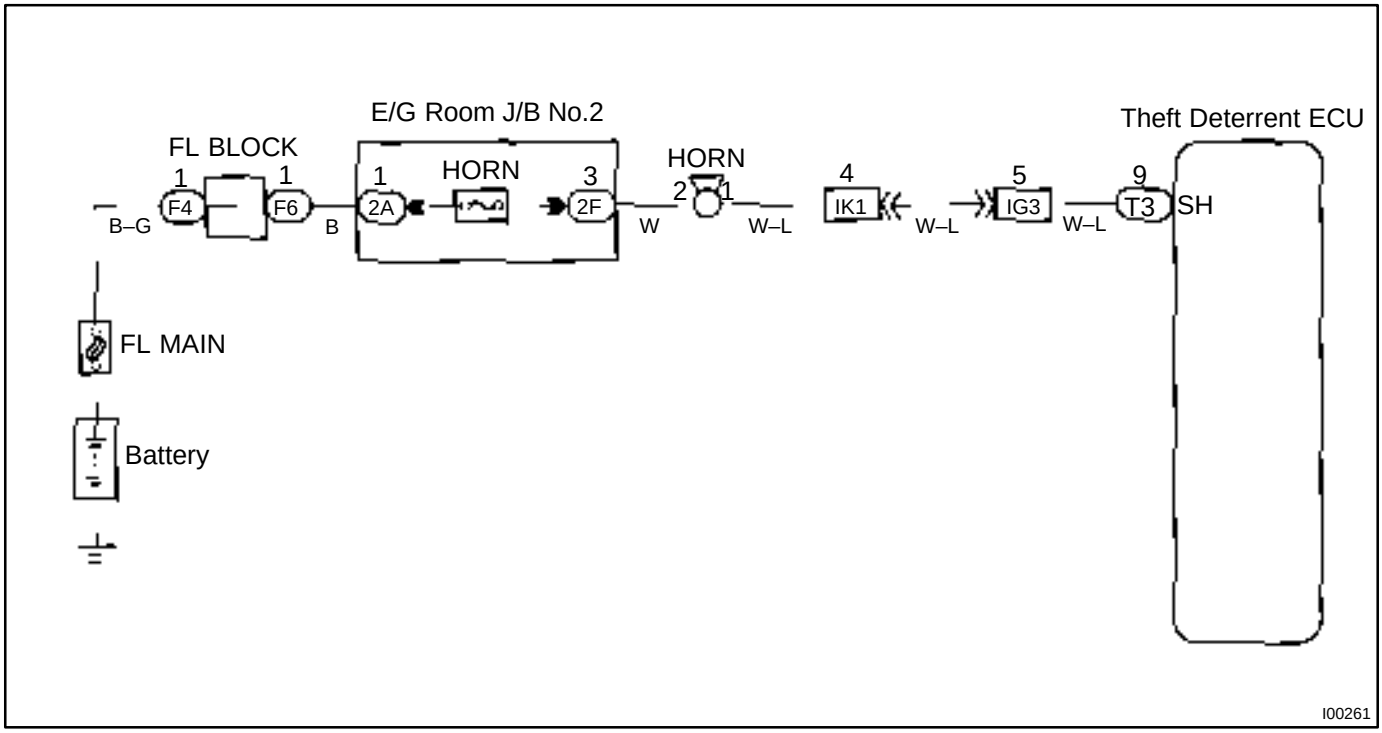

INSPECTION PROCEDURE

1	**Check voltage between terminal 1 of theft deterrent horn connector and body ground.**

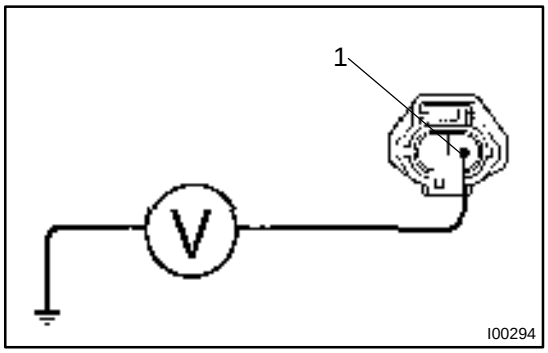

PREPARATION:
Remove the theft deterrent horn and disconnect the connector.
CHECK:
Measure voltage between terminal 1 of theft deterrent horn connector and body ground.
OK:
Voltage: 10 – 14 V

NG	**Check and repair harness and connector between HORN fuse and theft deterrent horn.**

OK

2	**Check theft deterrent horn.**

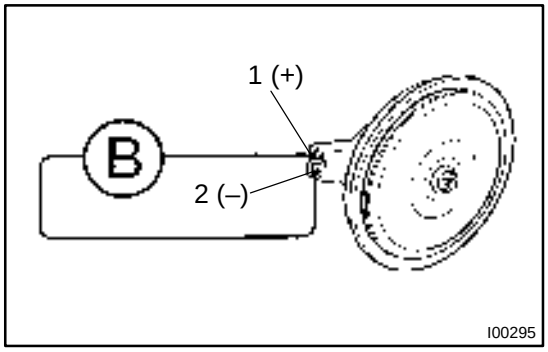

CHECK:
Connect positive (+) lead to terminal 1 and negative (–) lead to terminal 2 to theft deterrent horn connector.
OK:
Theft deterrent horn blows.

NG	**Replace theft deterrent horn.**

OK

3	**Check harness and connector between theft deterrent ECU and theft deterrent horn (See page IN–29).**

NG	**Check and repair harness or connector.**

OK

Check and replace theft deterrent ECU.

DI06W–06

Horn Relay Circuit

CIRCUIT DESCRIPTION

When the theft deterrent system is activated, it causes the Tr in the ECU to switch ON and OFF in approximately 0.4 sec. cycles. This switches the horn relay ON and OFF, thus the horns blow (See the wiring diagram below).

In this condition, if any of the following operations is done, the Tr in the ECU goes off and the horn relay switches off, thus stopping the horns from blowing:

(1) Unlock the front LH or RH door with key.
(2) Turn the ignition switch to ACC or ON position.
(3) Unlock the doors with the wireless door lock control system.
(4) Wait for approximately 60 seconds.
(5) Push the panic switch of the wireless door lock control system.

WIRING DIAGRAM

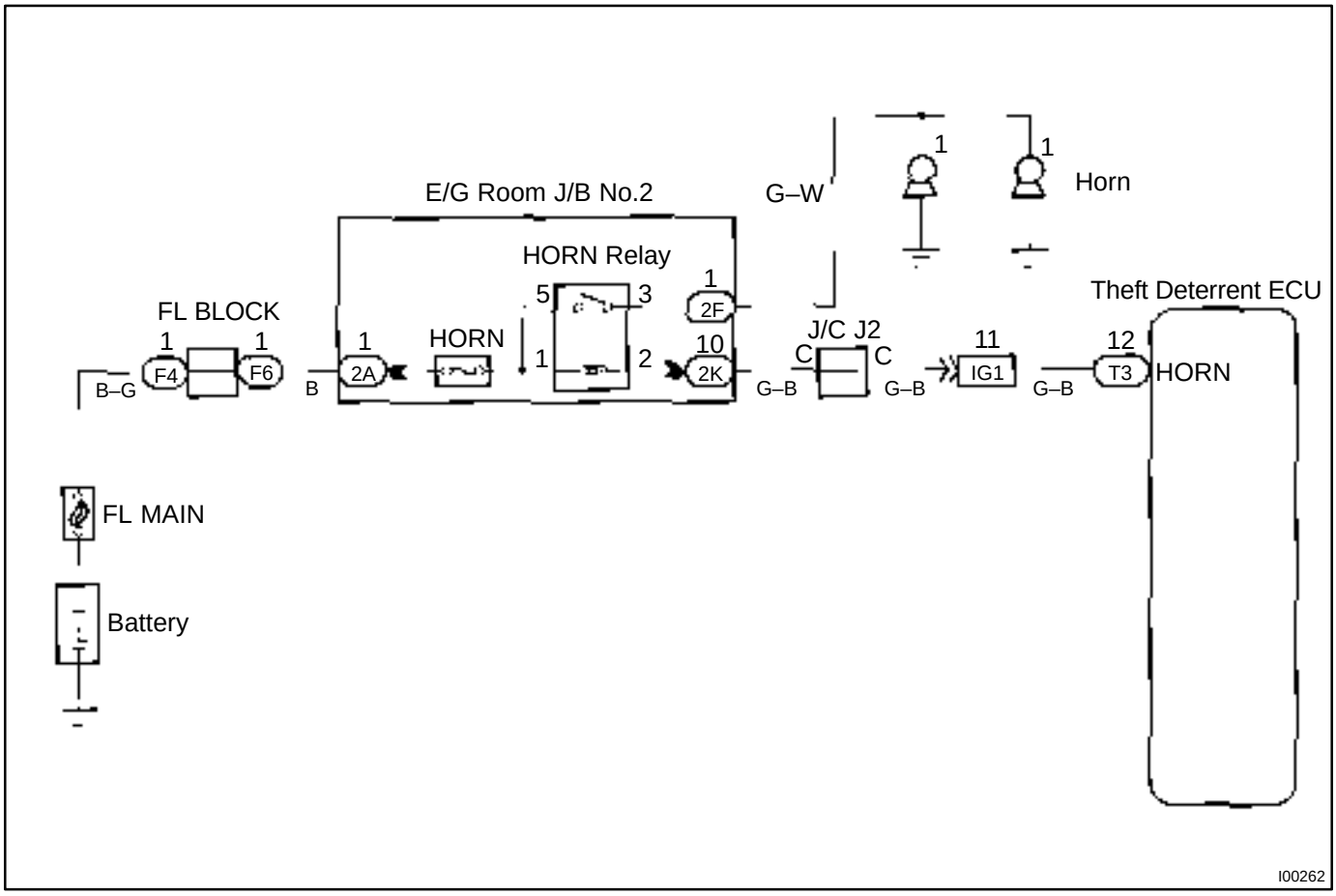

INSPECTION PROCEDURE

HINT:

The flow chart below is based on the premise that the horns blow normally whenever the horn switch is operated. If horn operation is not normal when the horn switch is operated, check the horn switch.

1	**Check voltage between terminal HORN of theft deterrent ECU connector and body ground.**

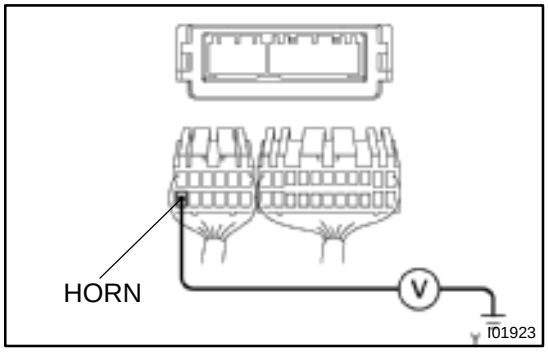

PREPARATION:

Disconnect the theft deterrent ECU connectors.

CHECK:

Measure voltage between terminal HORN of theft deterrent ECU connector and body ground.

OK:

Voltage: 10 – 14 V

NG → **Check and repair harness and connector between theft deterrent ECU and horn relay.**

OK

Check and replace theft deterrent ECU.

DI06X–06

Headlight Control Relay Circuit

CIRCUIT DESCRIPTION

When the theft deterrent system is activated, it causes the Tr in the ECU to switch ON and OFF at approximately 0.4 sec. intervals. This switches the headlight control relay ON and OFF, thus flashing the headlights (See the wiring diagram below).

In this condition, if any of the following operations is done, the Tr in the ECU goes OFF and the headlight control relay switches OFF, thus stopping the headlights flashing:

(1) Unlock the front LH or RH door with key.
(2) Turn the ignition switch to ACC or ON position.
(3) Unlock the doors with the wireless door lock control system.
(4) Wait for approximately 60 seconds.
(5) Push the panic switch of the wireless door lock control system.

WIRING DIAGRAM

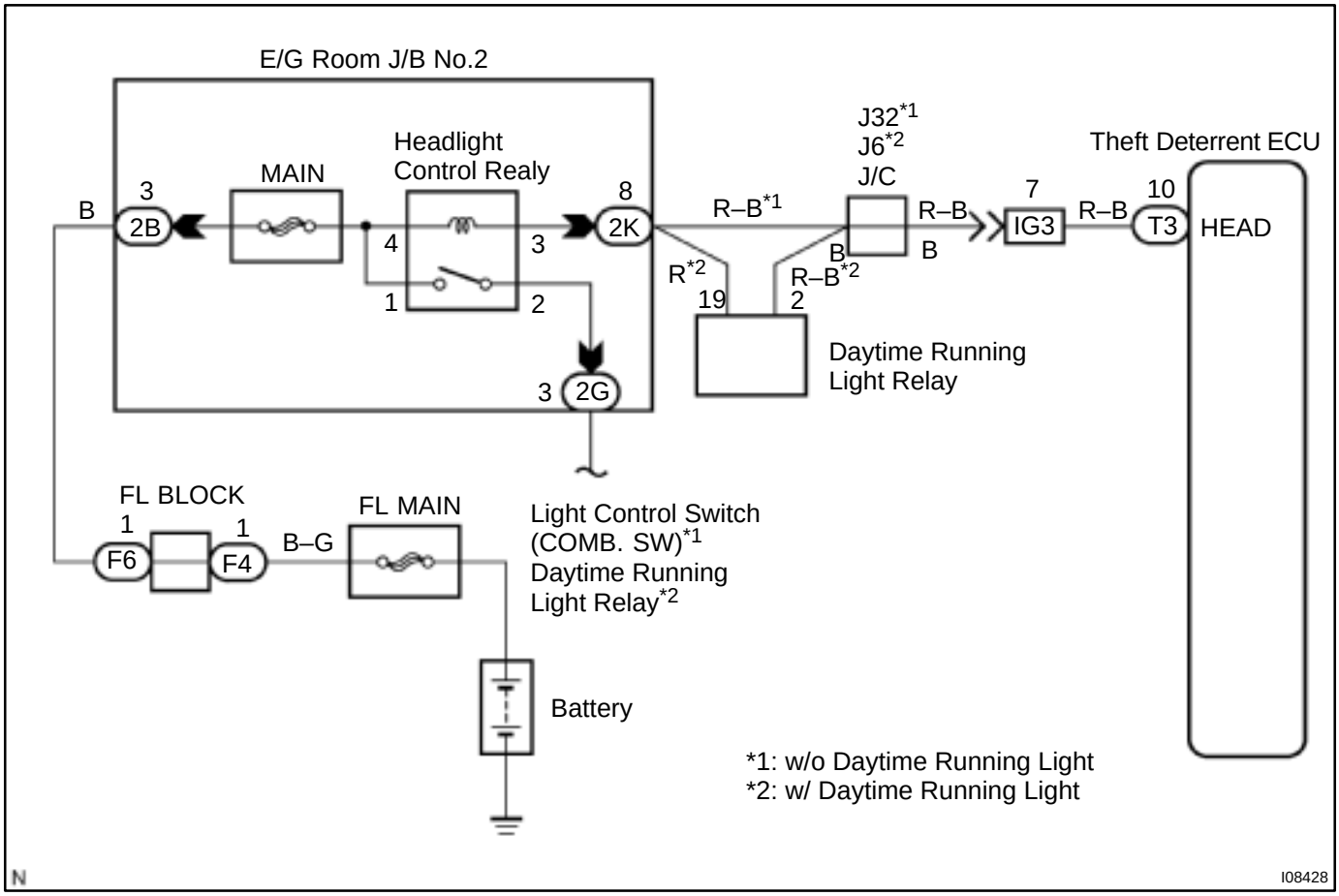

INSPECTION PROCEDURE

HINT:The flow chart below is based on the premise that the headlights light up normally whenever the light control switch is operated. If headlight operation is not normal when the light control switch is operated, proceed to troubleshooting on page BE–2.

1	**Check voltage between terminal HEAD of theft deterrent ECU connector and body ground.**

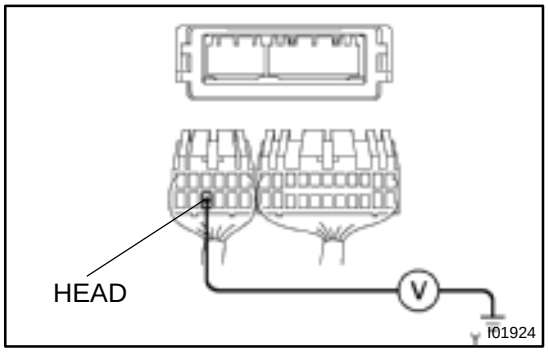

PREPARATION:
Disconnect the theft deterrent ECU connector.
CHECK:
Measure voltage between terminal HEAD of theft deterrent ECU connector and body ground.
OK:
Voltage: 10 – 14 V

NG → **Check and repair harness and connector between theft deterrent ECU and headlight control relay (See page IN–31).**

OK

Check and replace theft deterrent ECU.

DI06Y–06

Taillight Control Relay Circuit

CIRCUIT DESCRIPTION

When the theft deterrent system is activated, it causes the Tr in the ECU to switch ON and OFF at approximately 0.4 sec. intervals. This switches the taillight control relay ON and OFF, thus flashing the taillights (See the wiring diagram below).

In this condition, if any of the following operations is done, the Tr in the ECU goes OFF and the taillight control relay switches OFF, thus stopping the taillights flashing:

(1) Unlock the front LH or RH door with key.
(2) Turn the ignition switch to ACC or ON position.
(3) Unlock the doors with the wireless door lock control system.
(4) Wait for approximately 60 seconds.
(5) Push the panic switch of the wireless door lock control system.

WIRING DIAGRAM

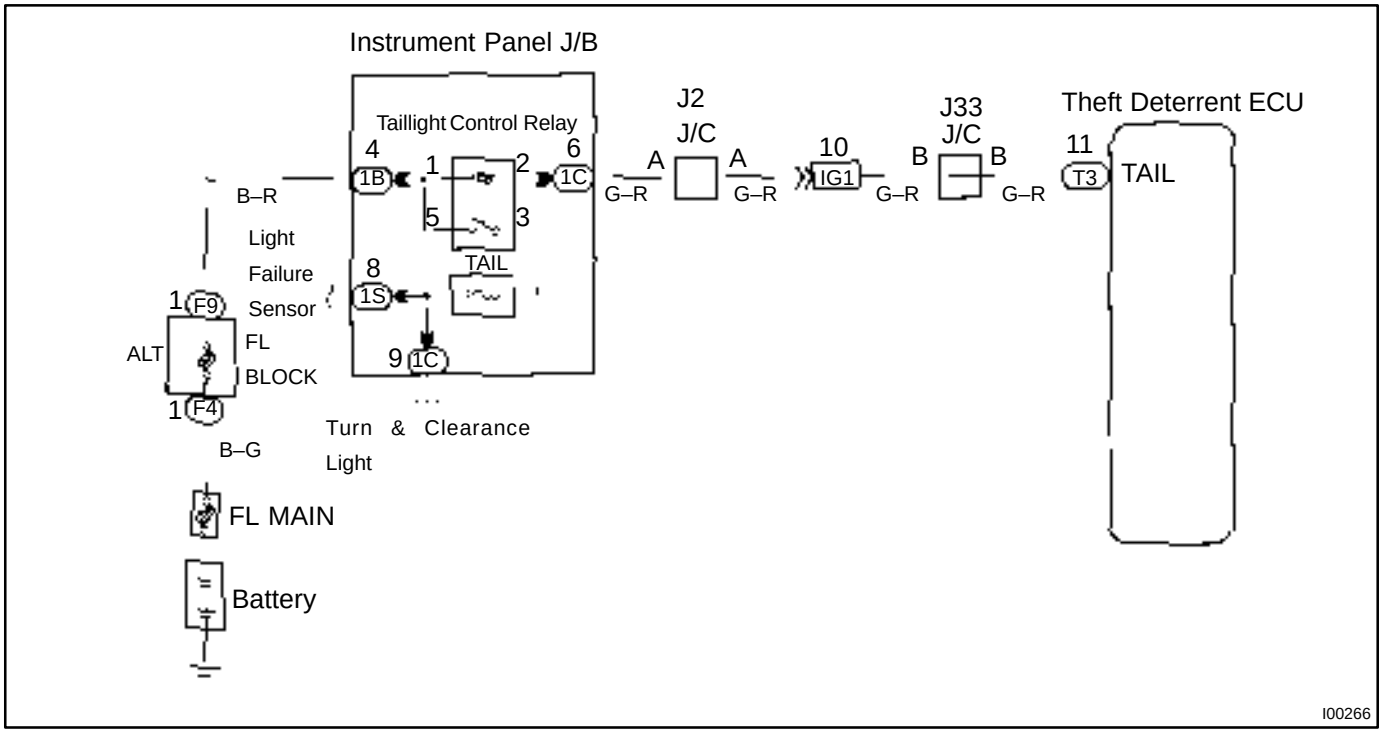

INSPECTION PROCEDURE

HINT:

The flow chart below is based on the premise that the taillights light up normally whenever the light control switch is operated. If taillight operation is not normal when the light control switch is operated, proceed to troubleshooting on page BE–2.

1	**Check voltage between terminal TAIL of theft deterrent ECU connector and body ground.**

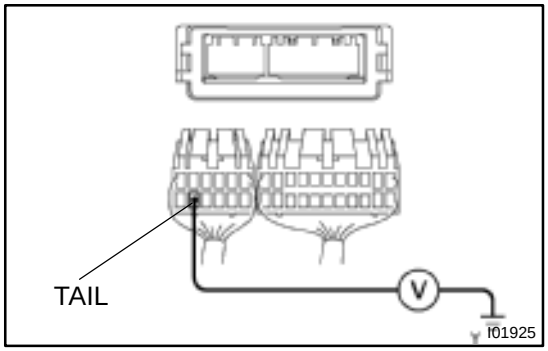

PREPARATION:

Disconnect the theft deterrent ECU connector.

CHECK:

Measure voltage between terminal TAIL of theft deterrent ECU connector and body ground.

OK:

Voltage: 10 – 14 V

NG → **Check and repair harness and connector between theft deterrent ECU and taillight control relay (See page IN–31).**

OK

Check and replace theft deterrent ECU.

DI06Z–06

Ignition Switch Circuit

CIRCUIT DESCRIPTION

When the ignition switch is turned to the ACC position, battery positive voltage is applied to the terminal ACC of the ECU. Also, if the ignition switch is turned to the ON position, battery positive voltage is applied to the terminals ACC and IG of the ECU. When the battery positive voltage is applied to the terminal ACC of the ECU while the theft deterrent system is activated, the warning stops. Furthermore, power supplied from the terminals ACC and IG of the ECU is used as power for the door courtesy switch, and position switch, etc.

WIRING DIAGRAM

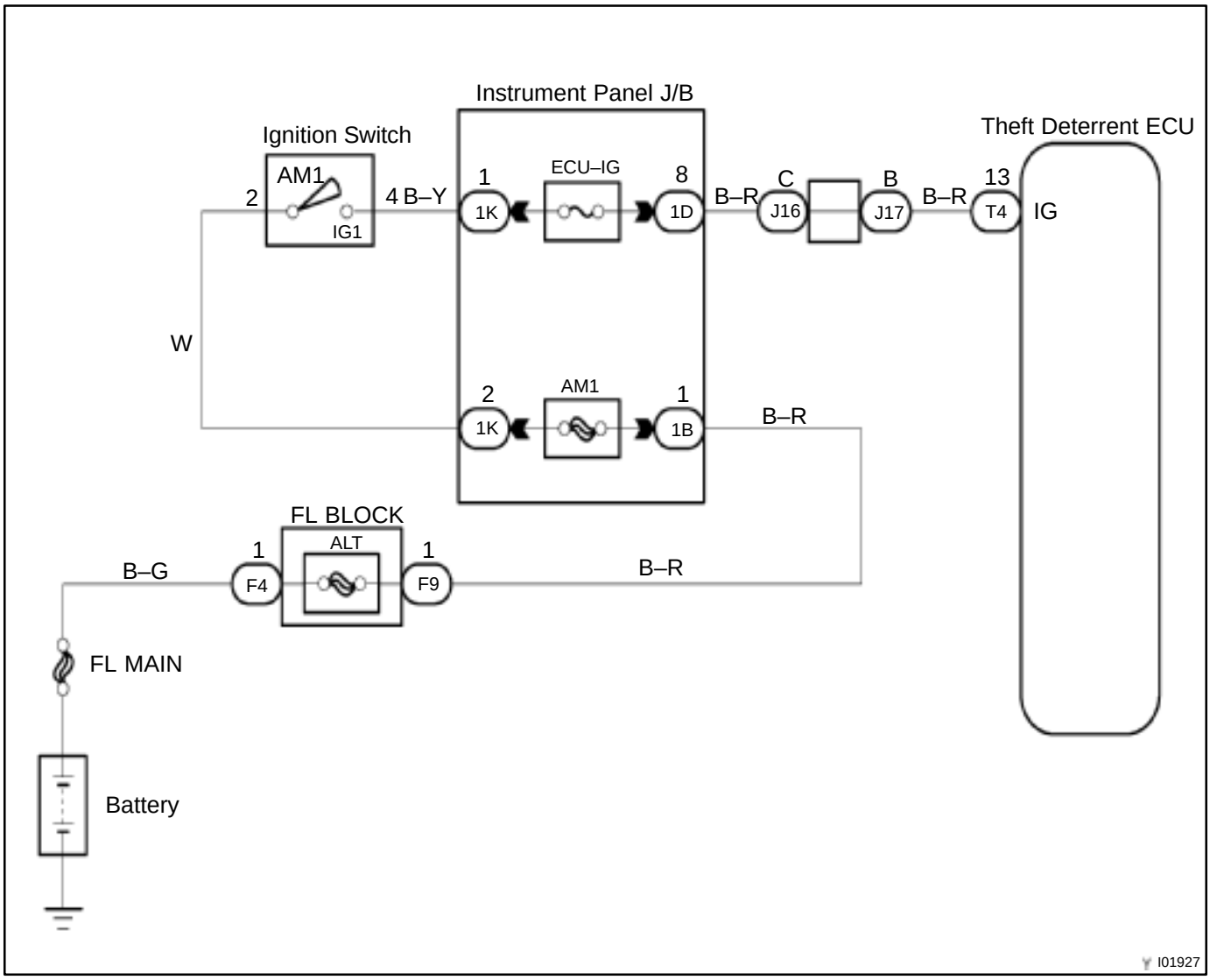

INSPECTION PROCEDURE

1	**Check CIG and ECU–IG fuses.**

Instrument panel J/B:

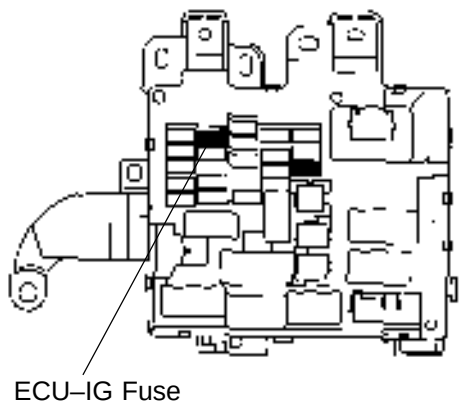

PREPARATION:

(a) Remove the fuse box opening cover.

(b) Remove ECU–IG fuses from instrument panel junction block No.1.

CHECK:

Check continuity of ECU–IG fuses.

OK:

Continuity

NG → **Check for short in all the harness and components connected to the ECU–IG fuses (See attached wiring diagram).**

OK

2	**Check voltage between terminal IG of theft deterrent ECU and body ground.**

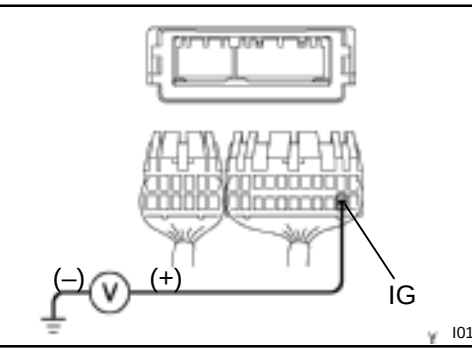

PREPARATION:

(a) Disconnect the theft deterrent ECU connectors.

(b) Turn ignition switch ON.

CHECK:

Measure voltage between terminal IG of theft deterrent ECU connector and body ground.

OK:

Voltage: 10 – 14 V

NG → **Check and repair harness and connector between theft deterrent ECU and battery (See page IN–31).**

OK

Check and replace theft deterrent ECU.

DI070–06

Key Unlock Warning Switch Circuit

CIRCUIT DESCRIPTION

The key unlock warning switch goes ON when the ignition key is inserted in the key cylinder and goes OFF when the ignition key is removed.
The ECU operates the key confinement prevention function while the key unlock warning switch is ON.

WIRING DIAGRAM

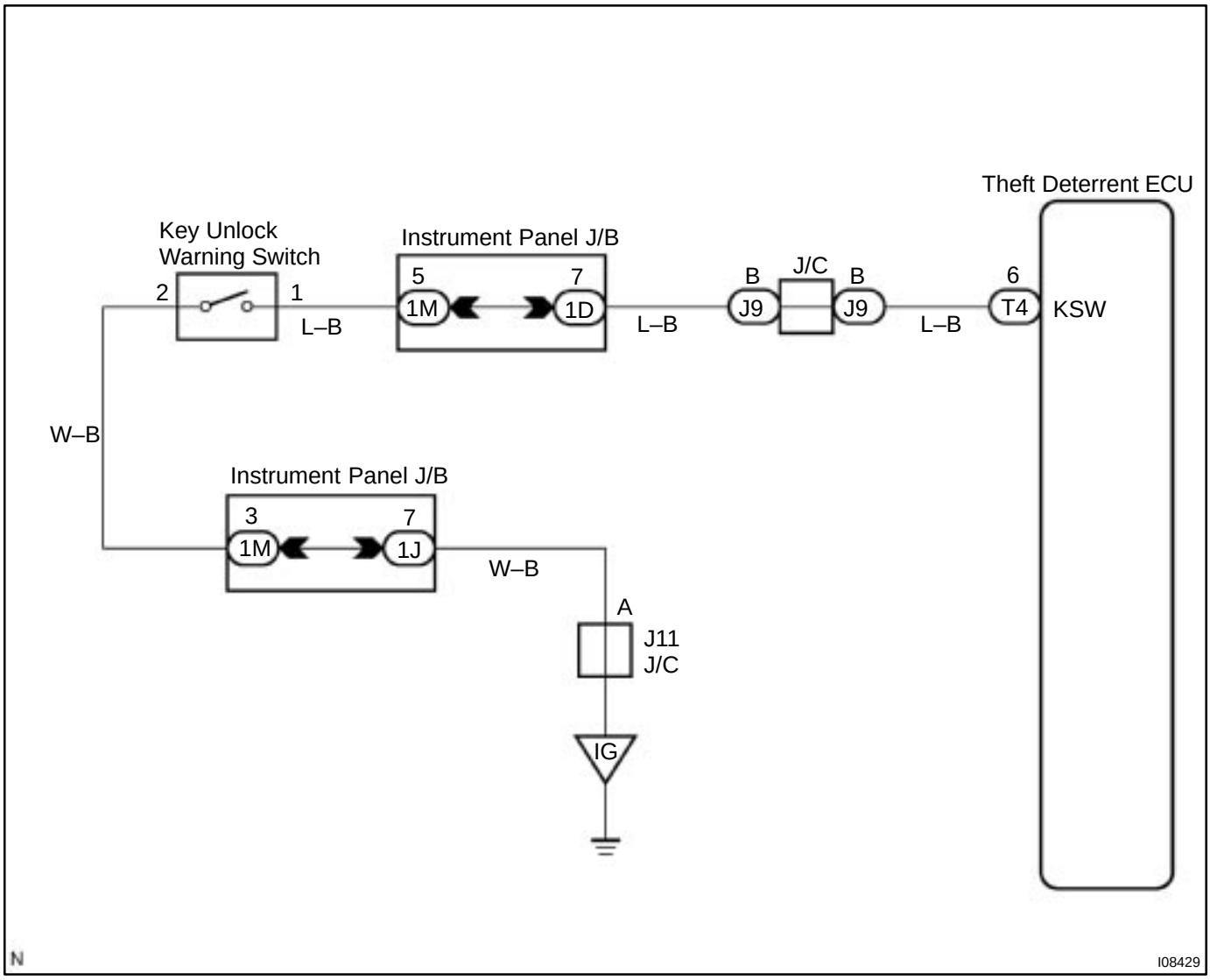

INSPECTION PROCEDURE

1	**Check key unlock warning switch.**

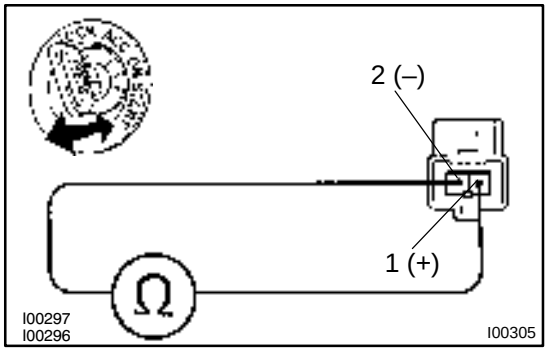

PREPARATION:
Disconnect key unlock warning switch connector.
CHECK:
Check continuity between terminal 1 and 2 of key unlock warning switch connector, when the key is inserted to the key cylinder or removed.
OK:

Switch position	Tester connection	Specified condition
ON (Key inserted)	1 – 2	Continuity
OFF (Key removed)	–	No continuity

NG → **Replace key unlock warning switch.**

OK ↓

2	**Check harness and connectors between ECU and key unlock warning switch, key unlock warning switch and body ground (See page IN–31).**

NG → **Repair or replace harness or connector.**

OK ↓

Check and replace theft deterrent ECU.*1

*1: When there is a malfunction that the theft deterrent system cannot be set, proceed to the next numbered circuit inspection shown on problem symptoms table (See page DI–837).

DI071–04

Luggage Compartment Door Key Lock and Unlock Switch Circuit

CIRCUIT DESCRIPTION

The luggage compartment door key lock and unlock switch goes ON when the luggage compartment door key cylinder is turned to the unlock side with the key.

WIRING DIAGRAM

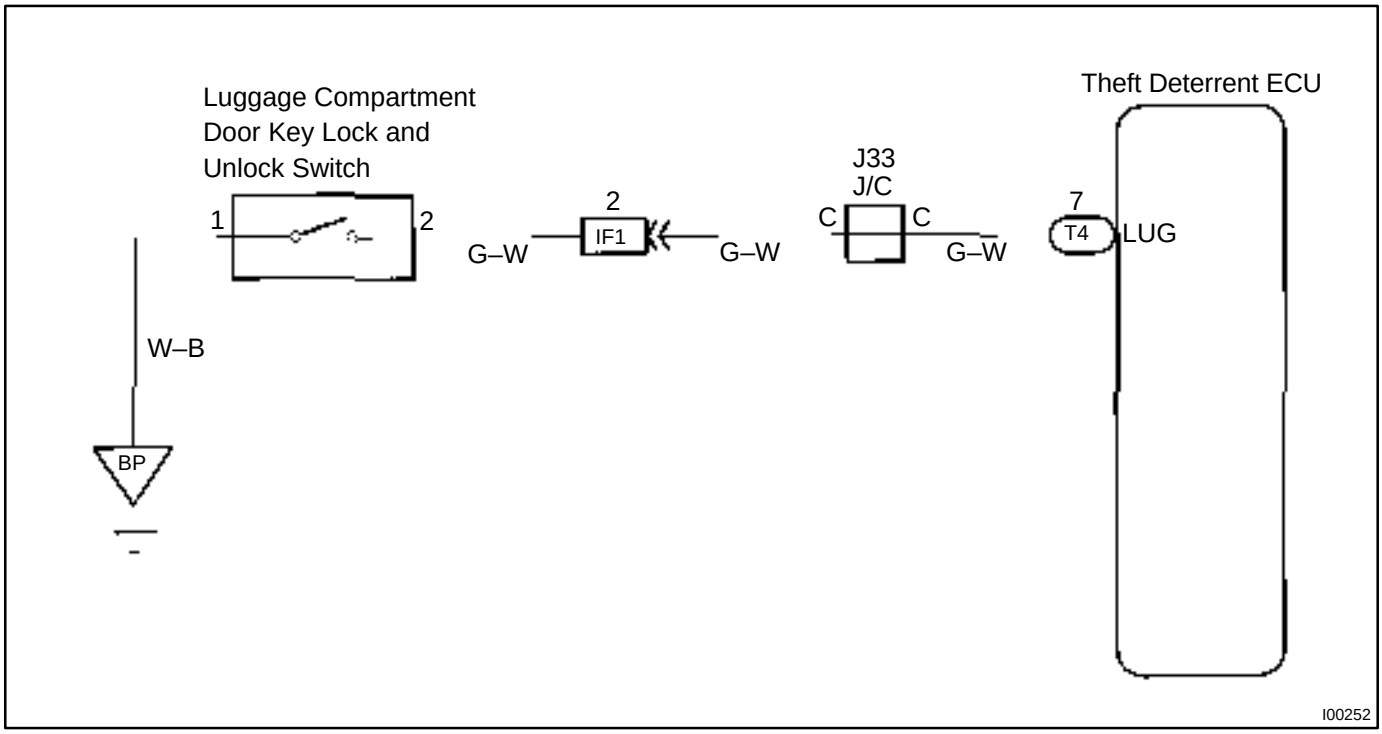

INSPECTION PROCEDURE

1	**Check voltage between terminal 1 of luggage compartment door key lock and unlock switch connector and body ground.**

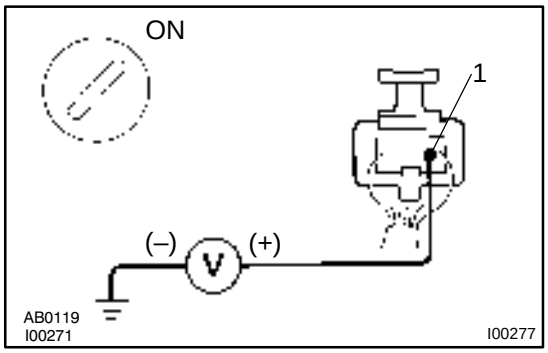

PREPARATION:

(a) Remove luggage compartment door trim.

(b) Turn ignition switch ON.

CHECK:

Measure voltage between terminal 1 of luggage compartment door key lock and unlock switch connector and body ground, when the key is turned to the unlock side and not turned respectively.

OK:

Key operation	Voltage
Turned to the unlock side	0 V
Not turned	Battery positive voltage

OK	**Check and replace theft deterrent ECU.*1**

NG

2	**Check luggage compartment door key lock and unlock switch.**

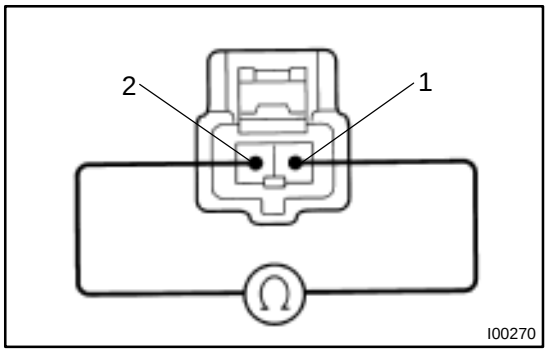

PREPARATION:

Disconnect luggage compartment door key lock and unlock switch connector.

CHECK:

Check continuity between terminals 1 and 2, when the key is turned to the unlock side and not turned respectively.

OK:

Key operation	Tester connection	Specified condition
Turned to unlock	1 – 2	Continuity
Not turned	–	No continuity

NG	**Repair or replace luggage compartment door key lock and unlock switch.**

OK

3	**Check harness and connector between theft deterrent ECU and key lock and unlock switch, key lock and unlock switch and body ground (See page IN–31).**

NG → **Repair or replace harness or connector.**

OK

Check and replace theft deterrent ECU.

*1: When there is a malfunction that the theft deterrent system cannot be set, proceed to the next numbered circuit inspection shown on problem symptoms table (See page DI–837).

DI072–06

Luggage compartment Door Courtesy Switch Circuit

CIRCUIT DESCRIPTION

The luggage compartment door courtesy switch goes ON when luggage compartment door is opened and goes off when the luggage compartment door is closed.

WIRING DIAGRAM

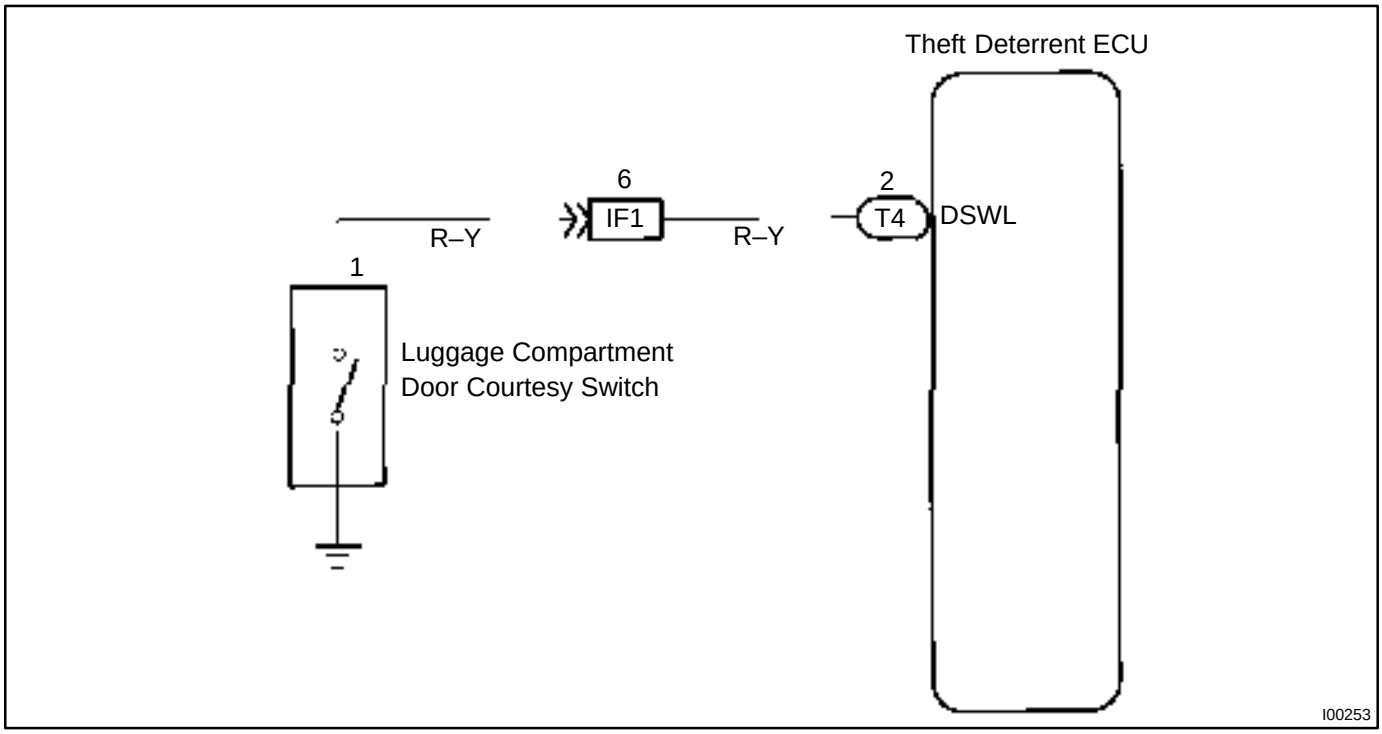

INSPECTION PROCEDURE

1	**Check operation of luggage compartment door courtesy light.**

CHECK:

Check that luggage compartment door courtesy light goes OFF when luggage compartment door courtesy switch is pushed, and comes ON when switch is not pushed.

NG → **Check and repair luggage compartment door courtesy light circuit (See page BE–32).**

OK

2	**Check for open in harness and connector between theft deterrent ECU and luggage compartment door courtesy switch (See page IN–31).**

NG → **Repair or replace harness or connectors.**

OK

Check and replace theft deterrent ECU.*1

*1: When there is a malfunction that the theft deterrent system cannot be set, proceed to the next numbered circuit inspection shown on problem symptoms table (See page DI–837).

DI073–06

Door Key Lock and Unlock Switch Circuit

CIRCUIT DESCRIPTION

The door key lock and unlock switch is built in the door key cylinder. When the key is turned to the lock side, terminal 1 of the switch is grounded and when the key is turned to the unlock side, terminal 2 of the switch is grounded.

WIRING DIAGRAM

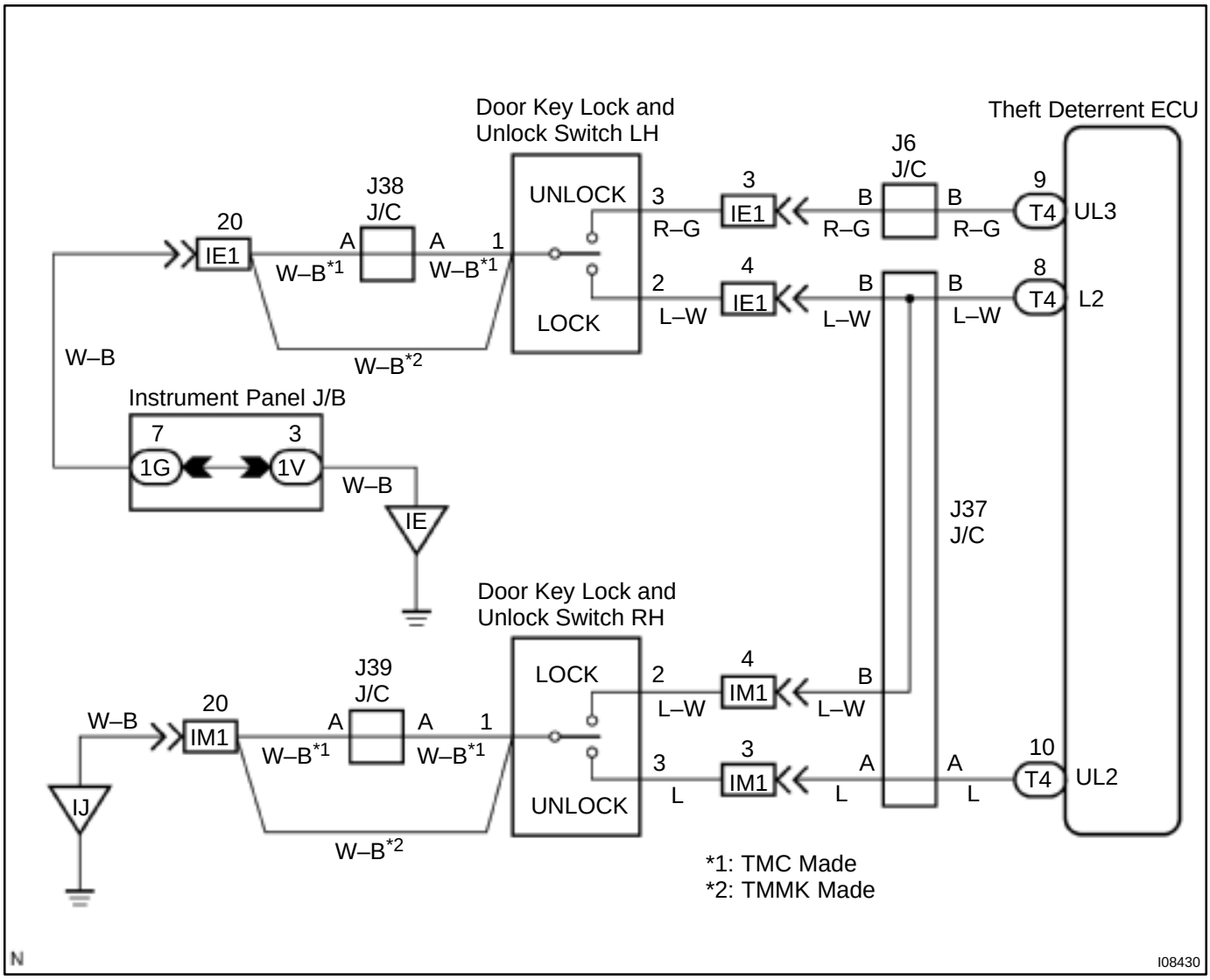

INSPECTION PROCEDURE

1	**Check door key lock and unlock switch.**

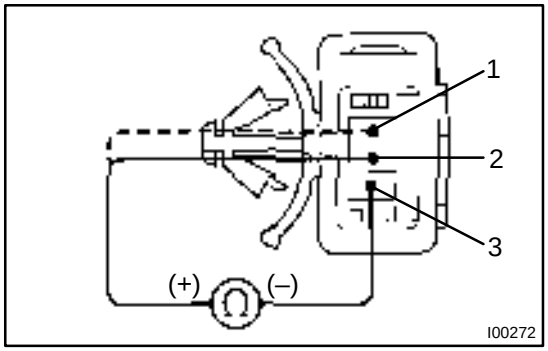

PREPARATION:

(a) Remove the door trim and service hole cover.

(b) Disconnect the door key lock and unlock switch connector.

CHECK:

Check continuity between terminals 1, 2 and 3 of door key lock and unlock switch connector, when each of door key lock and unlock switch is turned to the lock side, unlock side and not turned.

OK:

Switch position	Tester connection	Specified condition
Lock side	2 – 3	Continuity
Unlock side	1 – 3	Continuity
OFF	–	No continuity

NG → **Replace door key lock and unlock switch.**

OK

2	**Check harness and connectors between ECU and switch, switch and body ground (See page IN–31).**

NG → **Repair or replace harness or connector.**

OK

Check and replace theft deterrent ECU.*1

*1: When there is a malfunction that the theft deterrent system cannot be set, proceed to the next numbered circuit inspection shown on problem symptoms table (See page DI–837).

DI074–06

Door Unlock Detection Switch Circuit

CIRCUIT DESCRIPTION

The door unlock detection switch is built in the door lock motor assembly. This switch is ON when the door lock knob is in the unlock position and OFF when the lock knob is in the lock position. The ECU detects the door lock knob conditions in this circuit. It is used as one of the operating conditions for the key confinement prevention function.

WIRING DIAGRAM

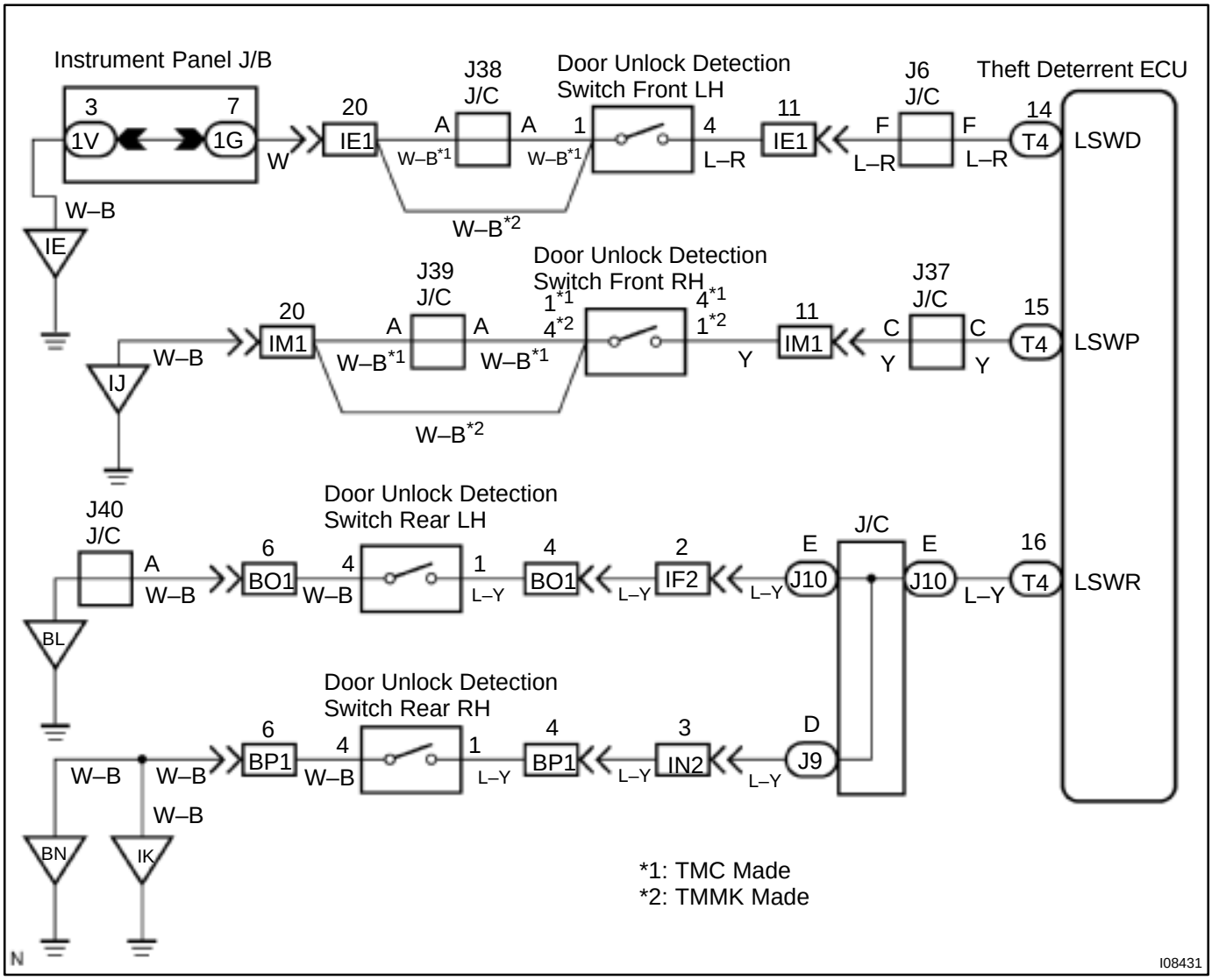

INSPECTION PROCEDURE

1	**Check Door Unlock Detection Switch.**

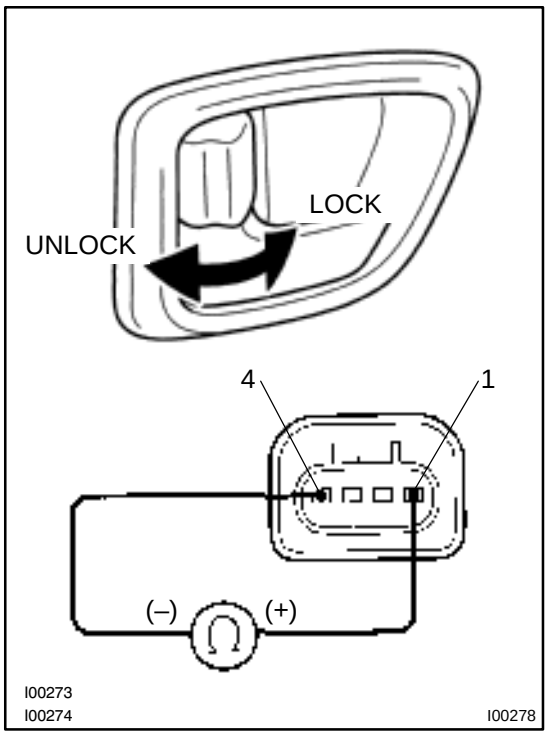

PREPARATION:

(a) Remove the door trim and service hole cover.

(b) Disconnect door unlock detection switch connector.

CHECK:

Check continuity between terminals 1 and 4 of door unlock detection switch connector, when the door lock knob is operated to the lock side and unlock side.

OK:

Switch Condition	Tester connection	Specified condition
Door unlock	1 – 4	Continuity
Door lock	–	No continuity

NG → **Replace door unlock detection switch.**

OK ↓

2	**Check harness and connectors between ECU and door unlock detection switch, door unlock detection switch and body ground (See page IN–31).**

NG → **Repair or replace harness or connector.**

OK ↓

Check and replace theft deterrent ECU.*1

*1: When there is a malfunction that the theft deterrent system cannot be set, proceed to the next numbered circuit inspection shown on problem symptoms table (See page DI–837).

DI075–06

Door Courtesy Switch Circuit

CIRCUIT DESCRIPTION

The door courtesy switch goes ON when the door is opened and goes OFF when the door is closed.

WIRING DIAGRAM

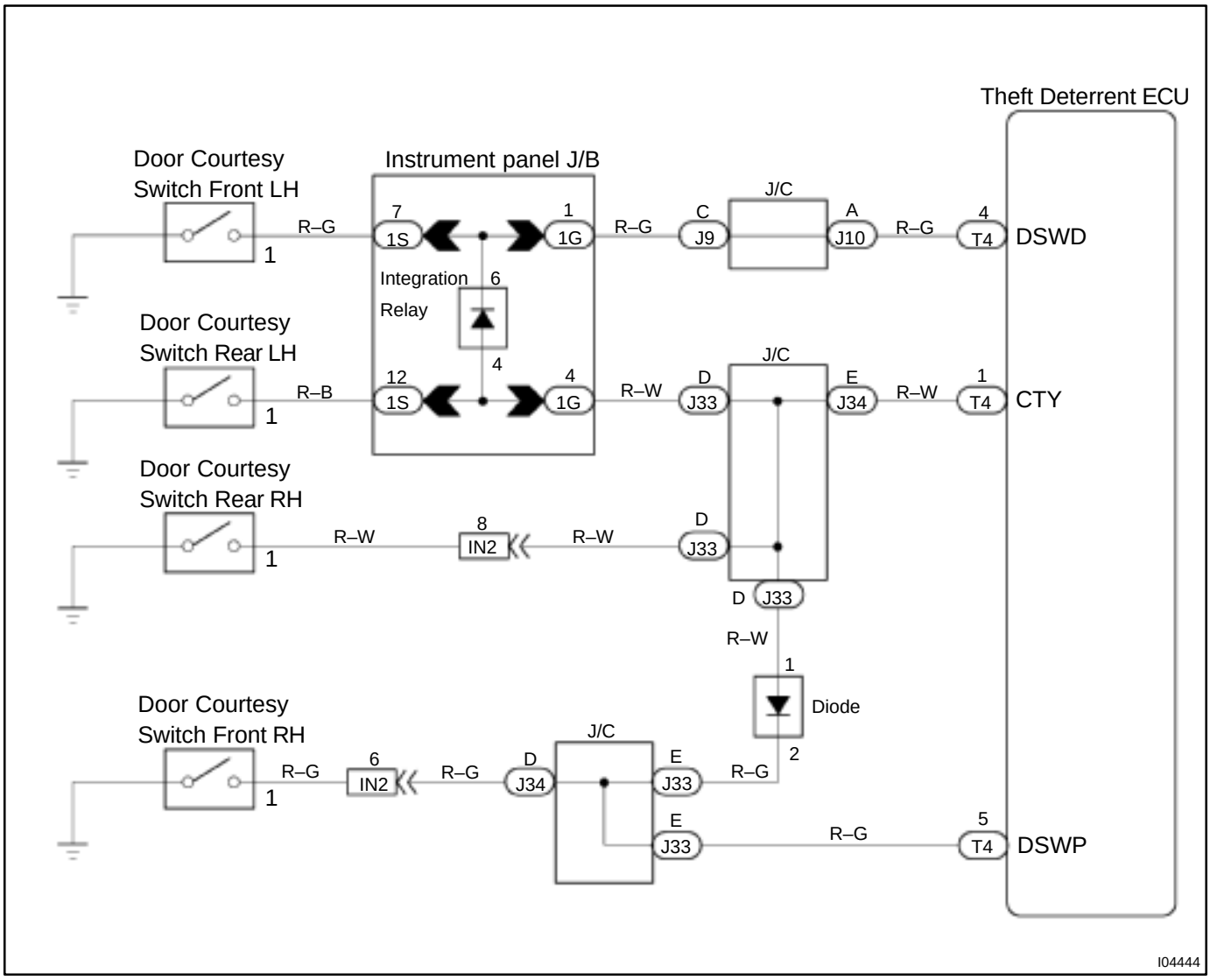

INSPECTION PROCEDURE

1	**Check operation of open door warning light.**

CHECK:

Check that open door warning light comes ON when each door is opened, and goes OFF when all doors are closed.

NG → **Check and repair open door warning light circuit.**

OK

2	**Check for open in harness and connector between theft deterrent ECU and door courtesy switch (See page IN–31).**

NG → **Repair or replace harness or connector.**

OK

Check and replace theft deterrent ECU.*1

*1: When there is a malfunction that the theft deterrent system cannot be set, proceed to the next numbered circuit inspection shown on problem symptoms table (See page DI–837).

DI076–06

Engine Hood Courtesy Switch Circuit

CIRCUIT DESCRIPTION

The engine hood courtesy switch is built into the engine hood lock assembly and goes ON when the engine hood is opened and goes OFF when the engine hood is closed.

WIRING DIAGRAM

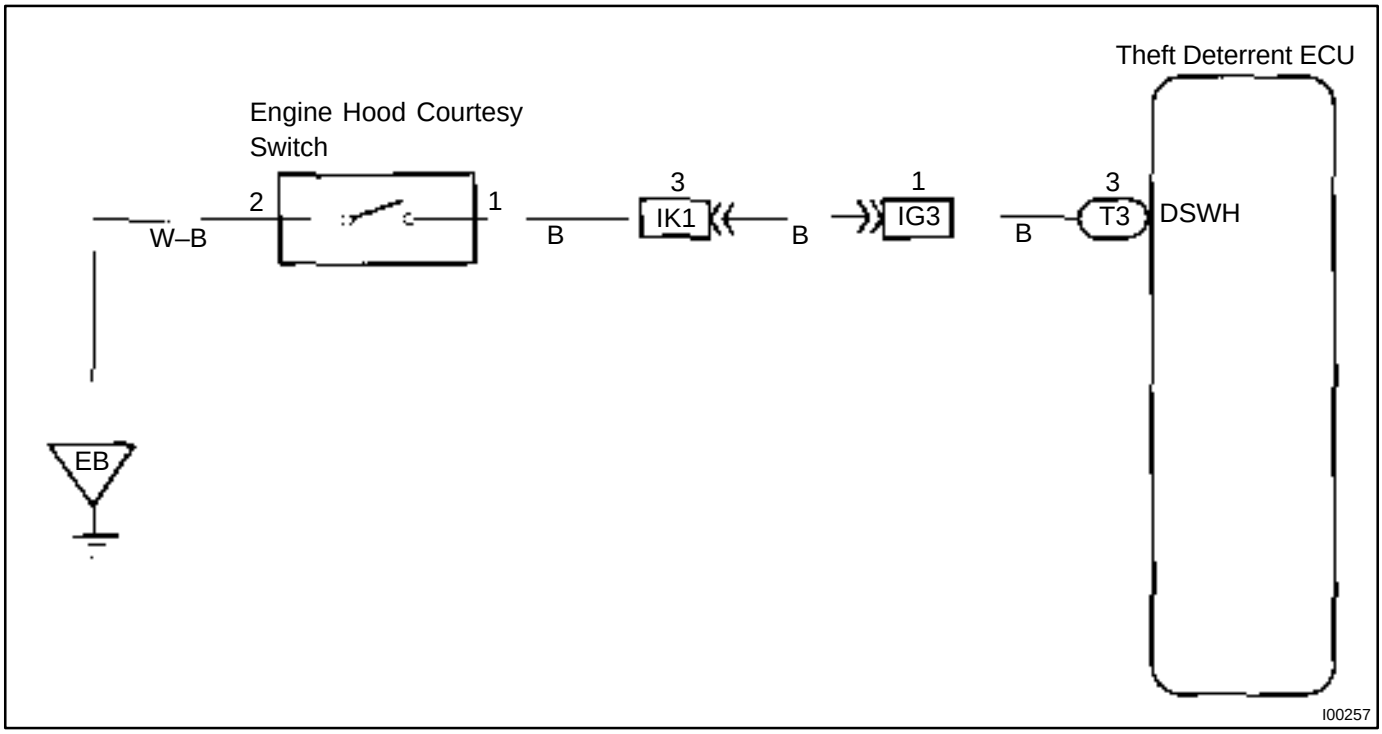

INSPECTION PROCEDURE

1	**Check engine hood courtesy switch.**

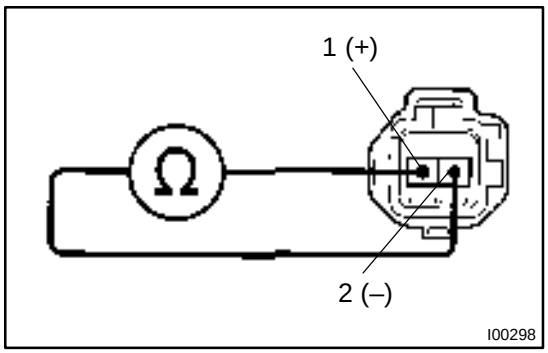

PREPARATION:

(a) Remove engine hood lock assembly.

(b) Disconnect engine hood courtesy switch connector.

CHECK:

Check continuity between terminals 1 and 2 when engine hood lock is locked and unlocked.

OK:

Engine hood lock	Tester connection	Specified condition
LOCK	–	No continuity
UNLOCK	1 – 2	Continuity

NG → **Replace engine hood courtesy switch.**

OK

2	**Check harness and connector between theft deterrent ECU and switch, switch and body ground (See page IN–31).**

NG → **Repair or replace harness or connector.**

OK

Check and replace theft deterrent ECU (See page IN–31).

CRUISE CONTROL SYSTEM

DI08F–11

HOW TO PROCEED WITH TROUBLESHOOTING

Troubleshoot in accordance with the procedure on the following page.

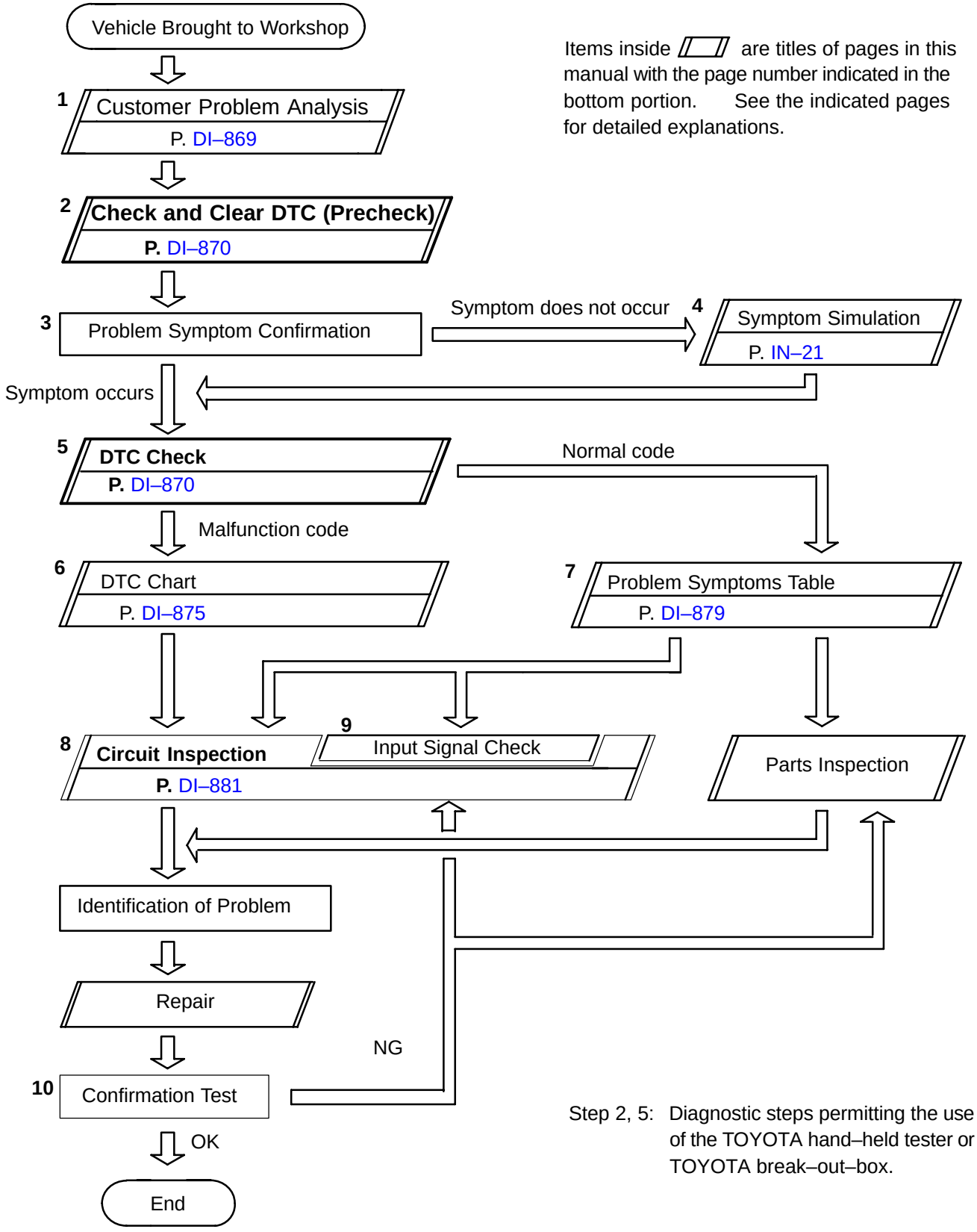

Items inside ▱ are titles of pages in this manual with the page number indicated in the bottom portion. See the indicated pages for detailed explanations.

Step 2, 5: Diagnostic steps permitting the use of the TOYOTA hand–held tester or TOYOTA break–out–box.

DI08G–08

CUSTOMER PROBLEM ANALYSIS CHECK

CRUISE CONTROL SYSTEM Check Sheet

Inspector's name: _____

Customer's Name		**Registration No.**	
		Registration Year	
		Frame No.	
Date Vehicle Brought in	/ /	**Odometer Reading**	**km Mile**

Condition of Problem Occurrence	**Date of Problem Occurrence**	/ /
	How Often does Problem Occurs	☑ Continuous ☑ Intermittent (Times a day)
	Vehicle Speed when Problem Occurred	**km Mile**

Symptoms	☑ Auto cancel occurs	● Driving condition ☐ City driving ☐ Freeway ☐ Up hill ☐ Down hill ● After cancel occurred, did the driver activate cruise control again? ☐ Yes ☐ No
	☐ Cancel does not occur	☐ With brake ON ☐ Except D position shift ☐ At 40 km/h (25 mph) or less ☐ When control SW turns to CANCEL position
	☐ Cruise control malfunction	☐ Slip to acceleration side ☐ Slip to deceleration side ☐ Hunting occurs ☐ O/D cut off does not occur ☐ O/D does not return
	☐ Switch malfunction	☐ SET ☐ ACCEL ☐ COAST ☐ RESUME ☐ CANCEL
	☐	☐ Remains ON ☐ Does not light up ☐ Blinking

DTC Check	**1st Time**	☐ Normal Code ☐ Malfunction Code (Code)
	2nd Time	☐ Normal Code ☐ Malfunction Code (Code)

DI1KS–03

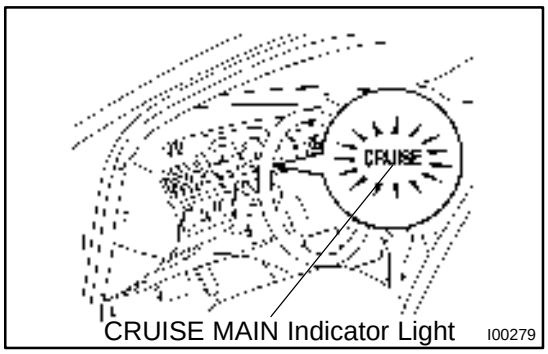

PRE–CHECK

1. DIAGNOSIS SYSTEM

(a) Check the indicator.

(1) Turn the ignition switch ON.

(2) Check that the CRUISE MAIN indicator light comes ON when the cruise control main switch is turned ON, and that the indicator light goes OFF when the main switch is turned OFF.

HINT:

If the indicator check result is not normal, proceed to troubleshooting (See page BE–2) for the combination meter section.

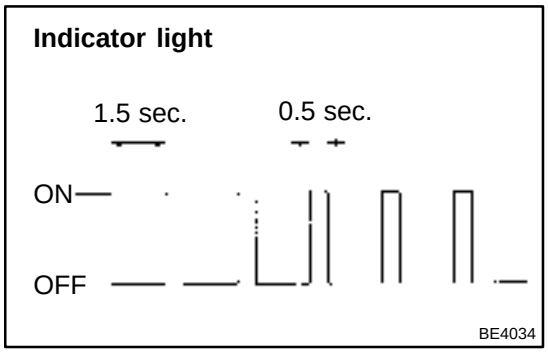

(b) Check the DTC.

HINT:

If a malfunction occurs in the No. 1 vehicle speed sensor or actuator, etc. during cruise control driving, the ECU actuates AUTO CANCEL of the cruise control and turns on and off the CRUISE MAIN indicator light to inform the driver of a malfunction. At the same time, the malfunction is stored in memory as a DTC.

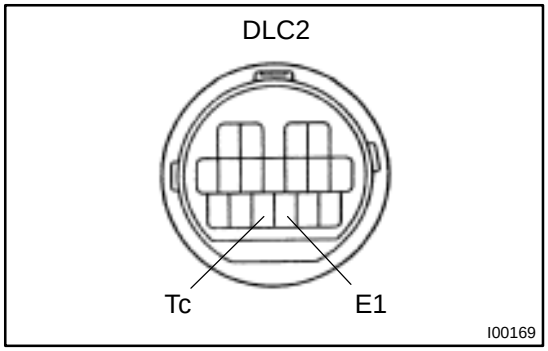

(c) Output of DTC using diagnosis check wire.

(1) Turn the ignition switch ON.

(2) Using SST, connect terminals Tc and E_1 of DLC2.

SST 09843–18020

(3) Read the DTC on the CRUISE MAIN indicator light.

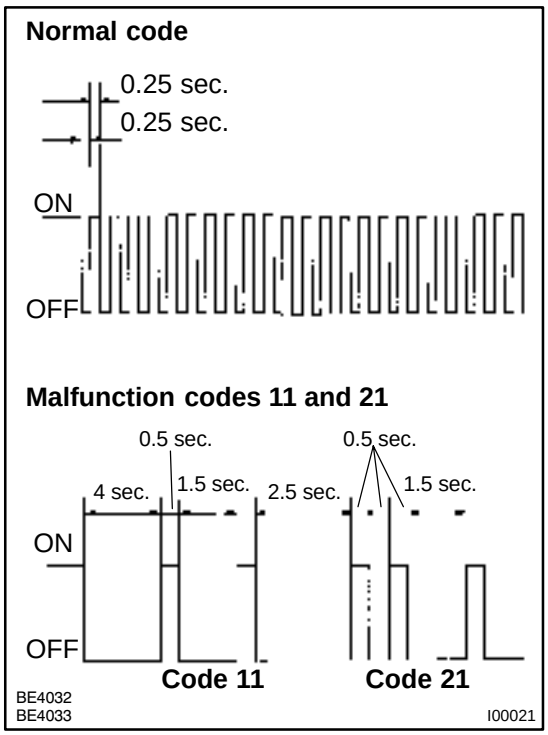

HINT:
If the DTC is not output, inspect the diagnosis circuit (See page DI–916).
As an example, the blinking patterns for codes; normal, 11 and 21 are shown in the illustration.

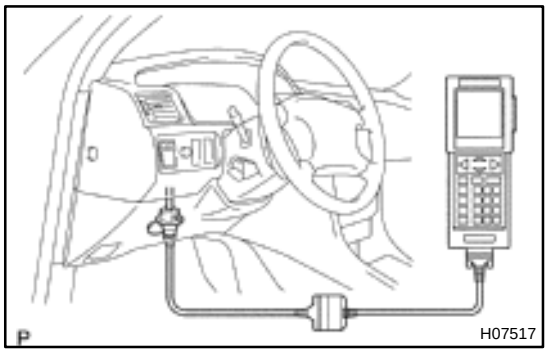

2. USING TOYOTA HAND–HELD TESTER

(a) Hook up the TOYOTA hand–held tester to the DLC2.
(b) Monitor the ECU data by following the prompts on the tester screen.

HINT:
TOYOTA hand–held tester has a ”Snapshot” function which records the monitored data.
Please refer to the TOYOTA hand–held tester operator’s manual for further details.

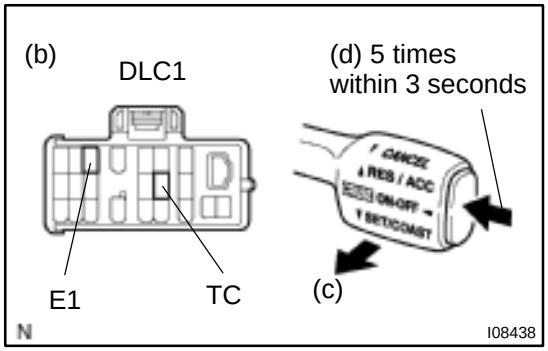

3. DTC CLEARANCE (ERASE MODE)

HINT:
During in the erase mode, diag detection does not work.

(a) Stop the vehicle.
(b) Using SST, connect terminals Tc and E_1 of DLC1.
SST 09843–18020
(c) Pull the cruise control switch to CANCEL.
(d) On the above metioned condition, turn on the cruise control main switch 5 times within 3 seconds.

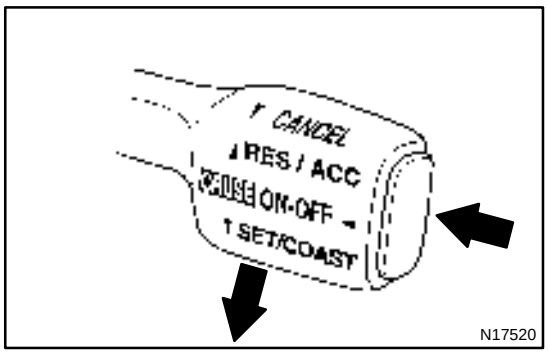

4. PROBLEM SYMPTOM CHECK (ROAD TEST)

(a) Inspect the SET switch.
- (1) Push the main switch ON.
- (2) Drive at a desired speed (40 km/h (25 mph) or higher).
- (3) Press the control switch to the SET/COAST.
- (4) After releasing the switch, check that the vehicle cruises at the desired speed.

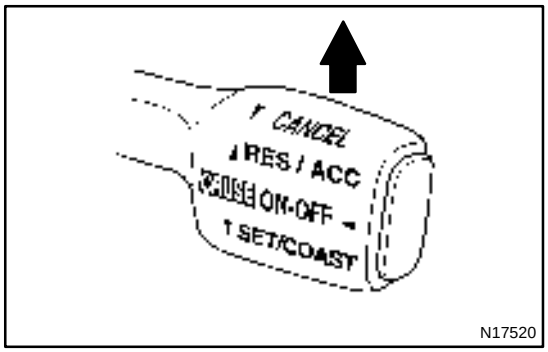

(b) Inspect the ACCEL switch.
- (1) Push the main switch ON.
- (2) Drive at a desired speed (40 km/h (25 mph) or higher).
- (3) Check that the vehicle speed increases while the control switch is turned to RES/ACC, and that the vehicle cruises at the set speed when the switch is released.
- (4) Momentarily raise the control switch upward to the RES/ACC position and then immediately release it. Check that the vehicle speed increases by approx. 1.5 km/h (Tap–up function).

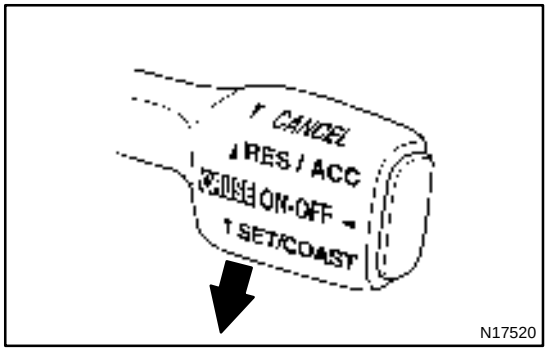

(c) Inspect the COAST switch.
- (1) Push the main switch ON.
- (2) Drive at a desired speed (40 km/h (25 mph) or higher).
- (3) Check that the vehicle speed decreases while the control switch is turned to SET/COAST, and the vehicle cruises at the set speed when the switch is released.
- (4) Momentarily pull the control switch down to SET/COAST, and then immediately release it. Check that the vehicle speed decreases by about 1.5 km/h (Tap–down function).

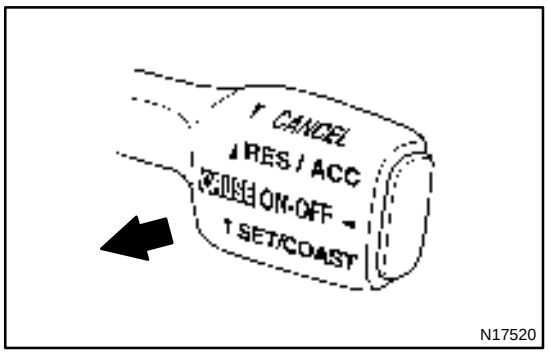

(d) Inspect the CANCEL switch.
(1) Push the main switch ON.
(2) Drive at a desired speed (40 km/h (25 mph) or higher).
(3) When operating one of the following operations, check that the cruise control system is cancelled and that the normal driving mode is reset.
- Depress the brake pedal
- Depress the clutch pedal (M/T)
- Shift to except D position (A/T)
- Push the main switch OFF
- Pull the cruise control switch to CANCEL

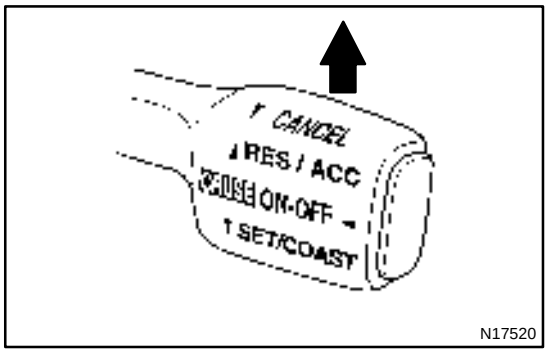

(e) Inspect the RESUME switch.
(1) Push the main switch ON.
(2) Drive at a desired speed (40 km/h (25 mph) or higher).
(3) When operating one of the following operations check that the cruise control system is cancelled and that the normal driving mode is reset.
- Depress the brake pedal
- Depress the clutch pedal (M/T)
- Shift to except D position (A/T)
- Push the main switch OFF
- Pull the cruise control switch to CANCEL

(4) After the control switch is turned to RES/ACC at the driving speed of more than 40 km/h (25 mph), check that the vehicle restores the speed prior to the cancellation.

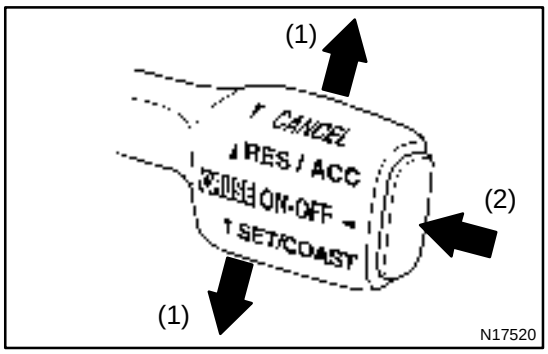

5. INPUT SIGNAL CHECK

HINT:

(1) For check No.1 ~ No.3

- Turn ignition switch ON.

(2) For check No.4

- Jack up the vehicle.
- Start the engine.
- Shift to D position.

(a) Pull the control switch to SET/COAST or RES/ACC position and hold it down or up (1).

(b) Push the main switch ON (2).

(c) Check that the CRUISE MAIN indicator light blinks twice or 3 times repeatedly after 3 seconds.

(d) Turn the SET/COAST or RES/ACC switch OFF.

(e) Operate each switch as listed in the table below.

(f) Read the blinking pattern of the CRUISE MAIN indicator light.

(g) After performing the check, turn the main switch OFF.

HINT:

When 2 or more signals are input to the ECU, the lowest numbered code will be displayed first.

No.	Operation Method	CRUISE MAIN Indicator Light Blinking Pattern	Diagnosis
1	Turn SET/COAST switch ON	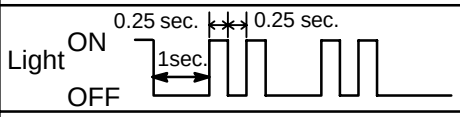	SET/COAST switch circuit is normal
2	Turn RES/ACC switch ON		RES/ACC switch circuit is normal
3	Turn CANCEL switch ON	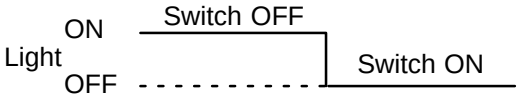	CANCEL switch circuit is normal
	Turn stop light switch ON Depress brake pedal		Stop light switch circuit is normal
	Turn PNP switch OFF (Shift to except D position)	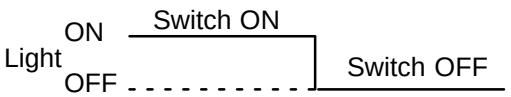	PNP switch circuit is normal
	Turn clutch switch OFF (Depress clutch pedal)		Clutch switch circuit is normal
4	Drive at about 40 km/h (25 mph)or higher		Vehicle Speed Sensor is normal
	Drive at about 40 km/h (25 mph) or below	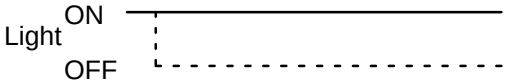	

DI08I–08

DIAGNOSTIC TROUBLE CODE CHART

If a malfunction code is displayed during the DTC check, check the circuit listed for that code in the table below and proceed to the appropriate page.

DTC No. (See Page)	Circuit Inspection	Trouble Area
11, 15 (DI–881)	Actuator Motor Circuit	●Actuator motor ●Harness or connector between cruise control ECU and actuator motor ●Cruise control ECU
12 (DI–883)	Actuator Magnetic Clutch Circuit	●STOP Fuse ●Stop light switch ●Actuator magnetic clutch ●Harness or connector between cruise control ECU and actuator magnetic clutch, actuator magnetic clutch and body ground ●Cruise control ECU
14 (DI–886)	Actuator Mechanical Malfunction	●Actuator motor (actuator lock: motor, arm) ●Cruise control ECU
21 (DI–888)	Open in Vehicle Speed Sensor Circuit	●Combination meter ●Harness or connector between cruise control ECU and combination meter, combination meter and vehicle speed sensor ●Vehicle speed sensor ●Cruise control ECU
23 (DI–891)	Vehicle Speed Signal Abnormal	●Vehicle speed sensor ●Cruise control ECU
32 (DI–892)	Control Switch Circuit	●Cruise control switch ●Harness or connector between cruise control ECU and cruise control switch, cruise control switch and body ground ●Cruise control ECU
41	Cruise control ECU	●Cruise control ECU
42	Source voltage drop	●Power source
51 (DI–895)	Idle Signal Circuit	●Throttle position sensor ●Harness or connector between ECM and throttle position sensor ●Harness or connector between cruise control ECU and ECM ●Cruise control ECU

DI08J–08

PARTS LOCATION

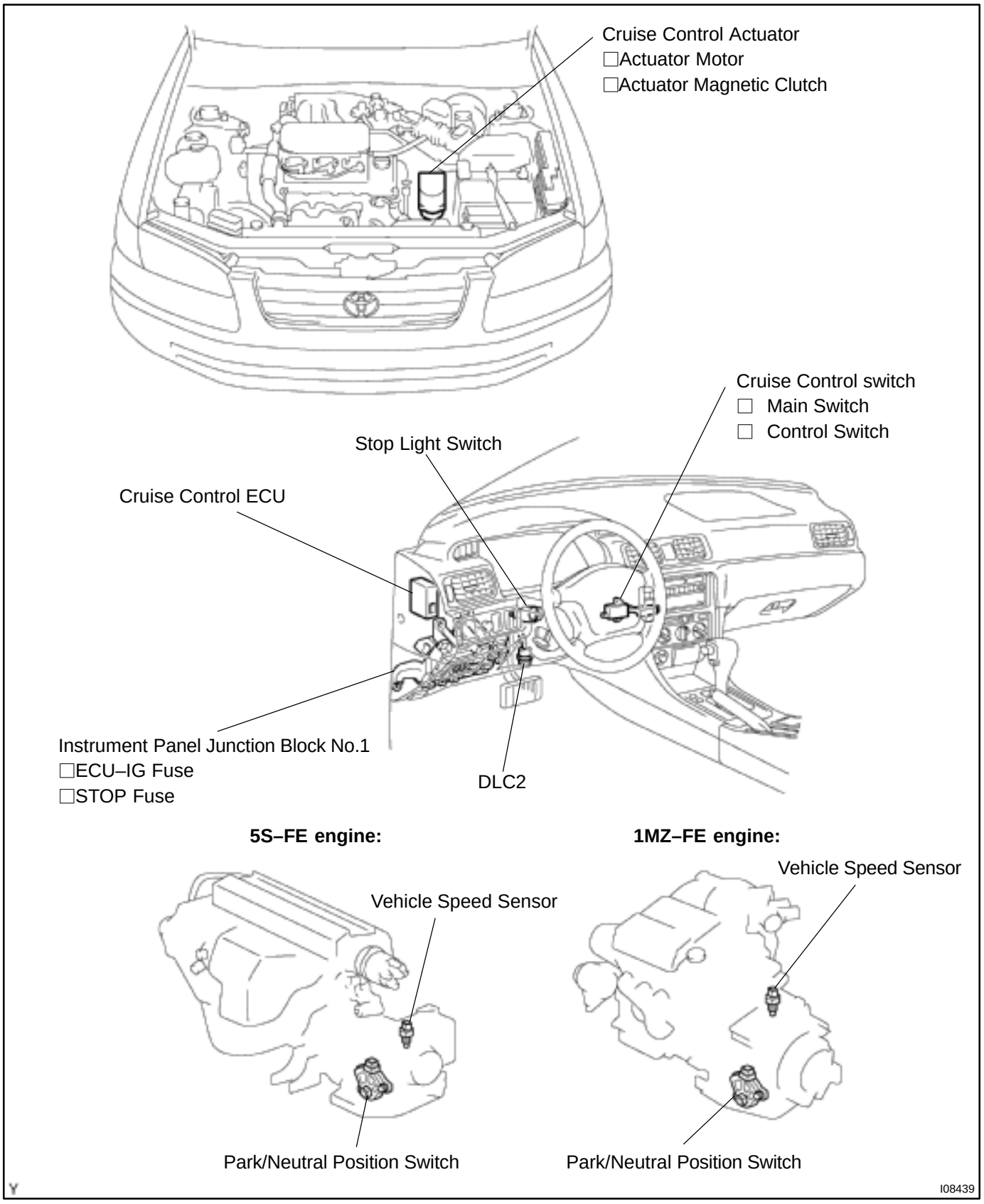

DI1KT–06

TERMINALS OF ECU

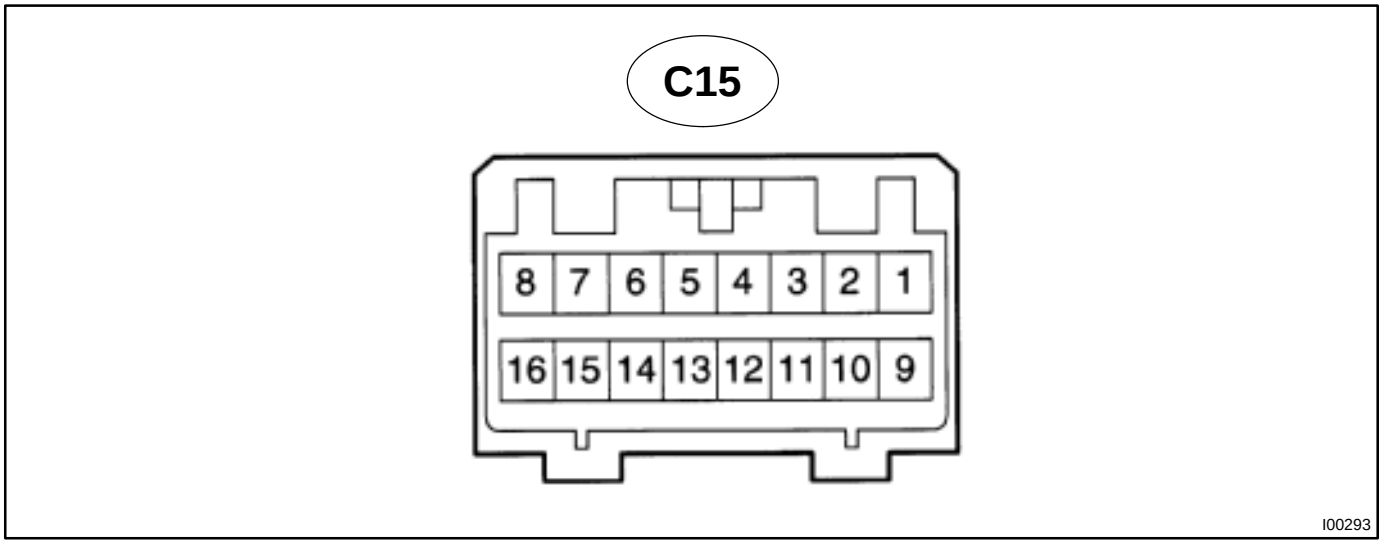

Symbols (Terminals No.)	Wiring Color	Condition	STD Voltage (V)
STP– ↔ GND (C15–2 ↔ C15–16)	G–W ↔ W–B	Depress brake pedal	10 – 16 V
		Release brake pedal	Below 1 V
D ↔ GND (C15–3 ↔ C15–16)	B–R ↔ W–B	Shift to positions except D	Below 1 V
		Shift to D position	10 – 16 V
PI ↔ GND (C15–4 ↔ C15–16)	O ↔ W–B	Ignition switch ON Cruise control main switch ON	Below 1.2 V
		Ignition switch ON Cruise control main switch OFF	10 – 16 V
TC ↔ GND (C15–5 ↔ C15–16)	LG–R ↔ W–B	Ignition switch ON	10 – 16 V
		Ignition switch ON Connect terminals Tc and E1 of diagnostic check connector	Below 1 V
ECT ↔ GND (C15–6 ↔ C15–16)	L–B ↔ W–B	During driving Gear position 3rd	10 – 16 V
		During driving Gear position O/D	Below 1 V
MC ↔ GND (C15–7 ↔ C15–16)	R–B ↔ W–B	During cruise control driving COAST switch held ON	9 – 15 V
		During cruise control driving ACC switch held ON	Below 1 V
L ↔ GND (C15–8 ↔ C15–16)	G–B ↔ W–B	During cruise control driving	9 – 15 V
		Except during cruise control driving	Below 1 V
B ↔ GND (C15–9 ↔ C15–16)	B–R ↔ W–B	Ignition switch ON	10 – 16 V
CCS ↔ GND (C15–10 ↔ C15–16)	W ↔ W–B	Ignition switch ON	10 – 16 V
		Ignition switch ON CANCEL switch held ON	4.2 – 8.8 V
		Ignition switch ON SET/COAST switch held ON	2.5 – 6.3 V
		Ignition switch ON RES/ACC switch held ON	0.8 – 3.7 V

Symbols (Terminals No.)	Wiring Color	Condition	STD Voltage (V)
CMS ↔ GND (C15–11 ↔ C15–16)	W–L ↔ W–B	Ignition switch ON Main switch OFF	10 – 16 V
		Ignition switch ON Main switch ON	Below 0.5 V
SPD ↔ GND (C15–12 ↔ C15–16)	V–W ↔ W–B	Engine start Car stoppage.	Below 1.5 V or 4.7 – 16 V
		During driving (Pulse generated).	3 – 7 V
IDL ↔ GND (C15–13 ↔ C15–16)	L–R ↔ W–B	Ignition switch ON Throttle valve fully opened.	10 – 16 V
		Ignition switch ON Throttle valve fully closed.	Below 1.5 V
OD ↔ GND (C15–14 ↔ C15–16)	Y–B ↔ W–B	During cruise control driving OD switch ON.	10 – 16 V
		During cruise control driving OD switch OFF (3rd driving)	Below 1 V
MO ↔ GND (C15–15 ↔ C15–16)	R–G ↔ W–B	During cruise control driving ACC switch hold ON	9 – 15 V
		During cruise control driving COAST switch hold ON	Below 1 V
GND ↔ Body Ground (C15–16 ↔ Body Ground)	W–B ↔ Body Ground	Constant	Below 1 V

DI08L–13

PROBLEM SYMPTOMS TABLE

Symptom	Suspect AreaSuspect Area	See pageSee page
SET not occurring or CANCEL occurring. (DTC is Normal)	3. Main Switch Circuit (Cruise control switch) 4. Vehicle Speed Sensor 5. Control Switch Circuit (Cruise control switch) 6. Stop Light Switch Circuit 7. Park/Neutral Position Switch Circuit 8. Clutch Switch 9. Actuator Motor Circuit 10. Cruise Control Cable 11. Cruise Control ECU	 DI–912 DI–888 DI–892 DI–898 DI–904 DI–907 DI–881 DI–918 IN–31
SET not occurring or CANCEL occurring. (DTC dose not output)	1. ECU Power Source Circuit 2. Cruise Control ECU	DI–909 IN–31
Actual vehicle speed deviates above or below the set speed.	1. Cruise Control Cable 2. Vehicle Speed Signal Abnormal 3. Electronically Controlled Transmission Communication Circuit 4. Actuator Motor Circuit 5. Idle Signal Circuit (Main throttle position sensor) 6. Cruise Control ECU	DI–918 DI–891 DI–901 DI–881 DI–895 IN–31
Gear shifting frequent between 3rd O/D when driving on uphill road. (Hurting)	1. Electronically Controlled Transmission Communication Circuit 2. Cruise Control ECU	 DI–901 IN–31
Cruise control not cancelled, even when brake pedal is depressed.	1. Cruise Control Cable 2. Stop Light Switch Circuit 3. Actuator Motor Circuit 4. Cruise Control ECU	DI–918 DI–898 DI–881 IN–31
Cruise control not cancelled, even when transmission is shifted to ”N” postion.	1. Cruise Control Cable 2. Park/Neutral Position Switch Circuit 3. Actuator Motor Circuit 4. Cruise Control ECU	DI–918 DI–904 DI–881 IN–31
Cruise control not cancelled, even when clutch pedal is depressed.	1. Cruise Control Cable 2. Clutch Switch Circuit 3. Actuator Motor Circuit 4. Cruise Control ECU	DI–918 DI–907 DI–881 IN–31
Control switch does not operate. (SET/COAST, ACC/RES, CANCEL not possible)	1. Cruise Control Cable 2. Control Switch Circuit 3. Actuator Motor Circuit 4. Cruise Control ECU	DI–918 DI–892 DI–881 IN–31
SET possible at 40 km/h (25 mph) or less, or CANCEL does not operate at 40 km/h (25 mph) or less.	1. Cruise Control Cable 2. Vehicle Speed Signal Abnormal 3. Actuator Motor Circuit 4. Cruise Control ECU	DI–918 DI–891 DI–881 IN–31
Poor response is in ACCEL and RESUME modes.	1. Cruise Control Cable 2. Electronically Controlled Transmission Communication Circuit 3. Actuator Motor Circuit 4. Cruise Control ECU	DI–918 DI–901 DI–881 IN–31
O/D does not resume, even though the road is not uphill.	1. Electronically Controlled Transmission Communication Circuit 2. Cruise Control ECU	 DI–901 IN–31

DTC memory is erased.	1. Cruise Control ECU	IN–31
DTC is not output, or is output when should not be.	1. Diagnosis Circuit 2. Cruise Control ECU	DI–916 IN–31
Cruise MAIN indicator light remains ON or falls to light up.	1. Cruise MAIN Indicator Light Switch Circuit	DI–914

DI08M–12

CIRCUIT INSPECTION

DTC	11, 15	Actuator Motor Circuit

CIRCUIT DESCRIPTION

The actuator motor is operated by signals from the ECU. Acceleration and deceleration signals are transmitted according to changes in the Duty Ratio (See below).

Duty Ratio

The duty ratio is the ratio of the period of continuity in one cycle. For example, if A is the period of continuity in one cycle, and B is the period of non–continuity.

$$\text{Duty Ratio} = \frac{A}{A + B} \times 100\ (\%)$$

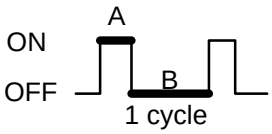

DTC No.	Detection Item	Trouble Area
11	Short in actuator motor circuit.	□Actuator motor □Harness or connector between cruise control ECU and actuator motor □Cruise control ECU
15	Open in actuator motor circuit.	□Actuator motor

WIRING DIAGRAM

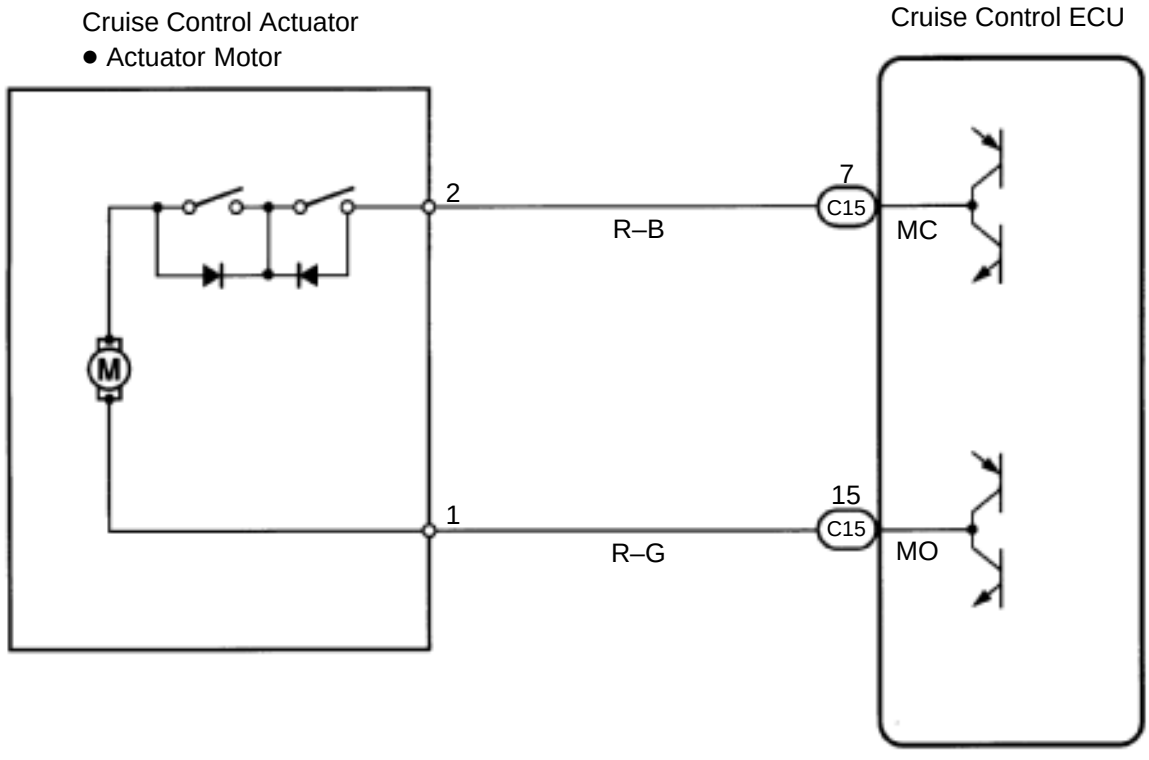

I00280

INSPECTION PROCEDURE

1	**Check resistance between terminals MO and MC of actuator motor.**

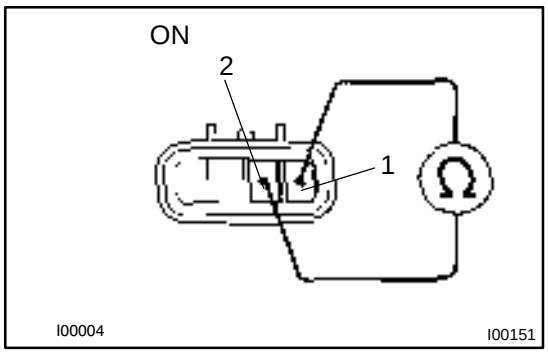

PREPARATION:

(a) Turn ignition switch ON.

(b) Disconnect the actuator connector.

CHECK:

Measure resistance between terminals 1 and 2.

HINT:

If control plate is in fully opened or fully closed positions, resistance can not be measured.

OK:

Resistance: more than 4.2 Ω

NG → **Replace cruise control actuator.**

OK

2	**Check for open and short in harness and connectors between cruise control ECU and actuator motor (See page IN–31).**

NG → **Repair or replace harness or connector.**

OK

Check and replace cruise control ECU. (See page IN–31).

DI08N–12

DTC	12	Actuator Magnetic Clutch Circuit

CIRCUIT DESCRIPTION

This circuit turns on the magnetic clutch inside the actuator during cruise control operation according to the signal from the ECU. If a malfunction occurs in the actuator or speed sensor, etc. during cruise control operation, the rotor shaft between the motor and control plate is released.
When the brake pedal is depressed, the stop light switch turns on, supplying electrical power to the stop light. Power supply to the magnetic clutch is mechanically cut and the magnetic clutch is turned OFF.
When driving downhill, if the vehicle speed exceeds the set speed by 15 km/h (9 mph), the ECU turns the safety magnet clutch OFF. If the vehicle speed later drops to within 10 km/h (6 mph), cruise control at the set speed is resumed.

DTC No.	Detection Item	Trouble Area
12	Short in actuator magnetic clutch circuit. Open (0.8 sec.) in actuator magnetic clutch circuit.	□ STOP Fuse □ Stop light switch □ Actuator magnetic clutch □ Harness or connector between cruise control ECU and actuator magnetic clutch, actuator magnetic clutch and body ground □ Cruise control ECU

WIRING DIAGRAM

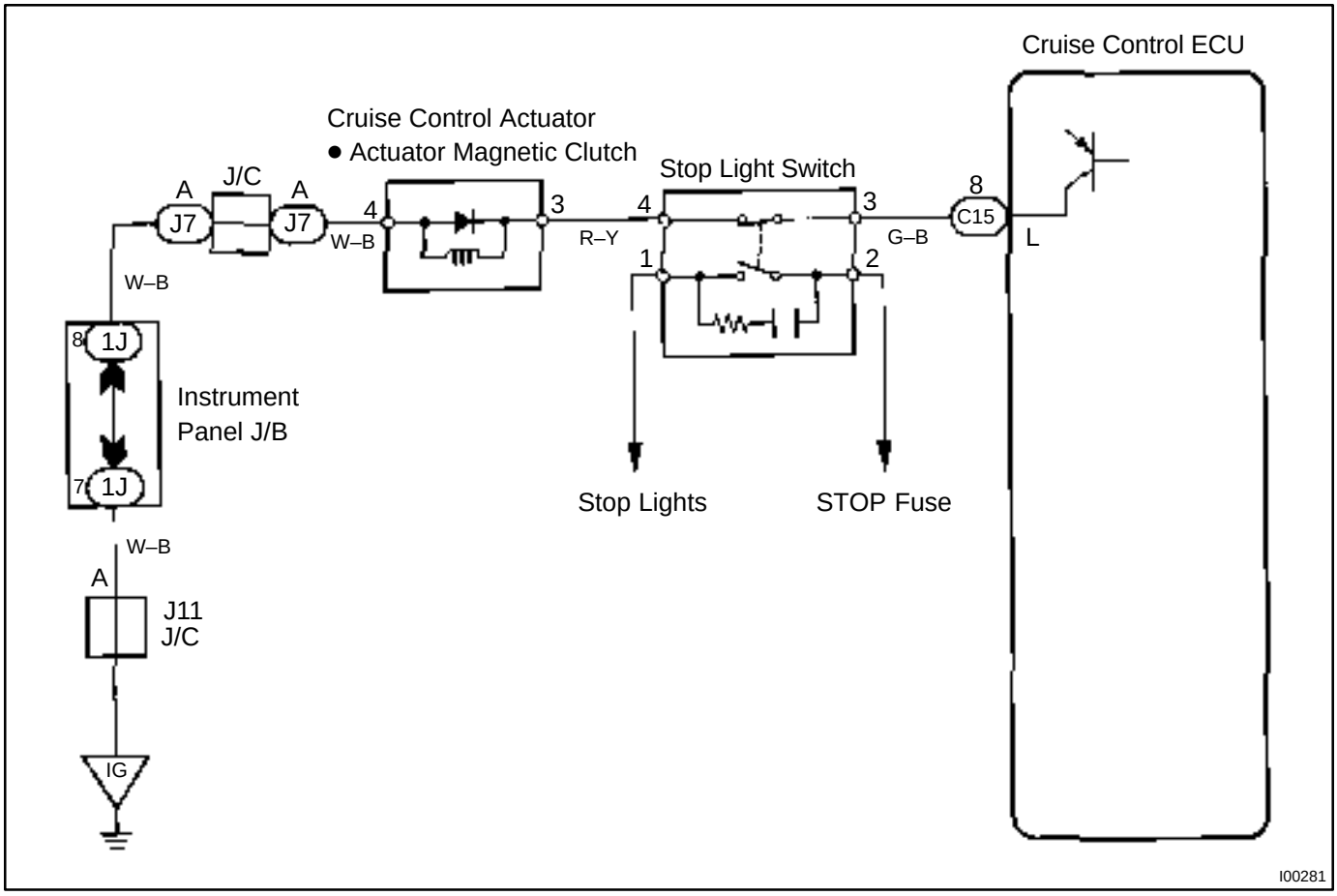

INSPECTION PROCEDURE

1	Check STOP fuse.

Instrument panel junction block No.1:

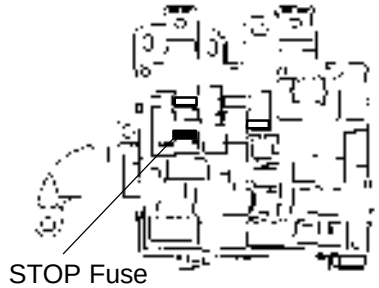

PREPARATION:

(a) Turn ignition switch OFF.

(b) Remove the STOP fuse from instrument panel junction block No.1.

CHECK:

Check fuse continuity.

OK:

There is continuity.

NG → **Replace STOP fuse.**

OK

2	Check stop light switch.

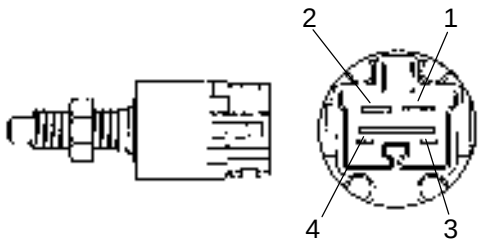

PREPARATION:

Disconnect the stop light switch connector.

CHECK:

Check continuity between terminals.

Switch position	Continuity
Switch pin free (Brake pedal depressed)	1 – 2
Switch pin pushed in (Brake pedal released)	3 – 4

NG → **Replace stop light switch.**

OK

3	**Check resistance between terminals L and GND of actuator magnetic clutch.**

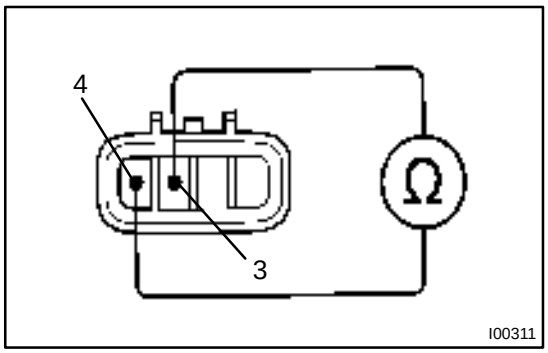

PREPARATION:

(a) Turn ignition switch OFF.

(b) Disconnect the actuator connector.

CHECK:

Measure resistance between terminals 3 and 4.

OK:

Resistance: 34.65 – 42.35 Ω.

NG → **Replace cruise control actuator.**

OK

4	**Check for open and short in harness and connectors between cruise control ECU and actuator magnetic clutch, actuator magnetic clutch and body ground (See page IN–31).**

NG → **Repair or replace harness or connector.**

OK

Check and replace cruise control ECU (See page IN–31).

DI08O–12

DTC	14	Actuator Mechanical Malfunction

CIRCUIT DESCRIPTION

The circuit detects the rotation position of the actuator control plate and sends a signal to the ECU.

DTC No.	Detection Item	Trouble Area
14	Cruise control actuator mechanical malfunction.	●Actuator lock: (motor, arm) ●Actuator motor ●Cruise control ECU

WIRING DIAGRAM

See page DI–881.

INSPECTION PROCEDURE

1	Check cruise control actuator arm locking operation

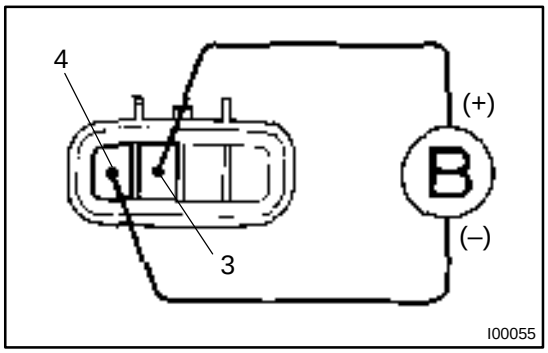

PREPARATION:

(a) Turn ignition switch OFF.

(b) Disconnect the actuator connector.

CHECK:

Connect the positive (+) lead from the battery to the terminal 3 of actuator and the negative (–) lead to terminal 4.

NOTICE:

Do not connect the high tension cables to the wrong battery terminal. The cruise control actuator will be damaged.

Move the control plate by hand.

OK:

Control plate doesn't move.

NG → **Replace cruise control actuator.**

OK

2	Check cruise control actuator operation.

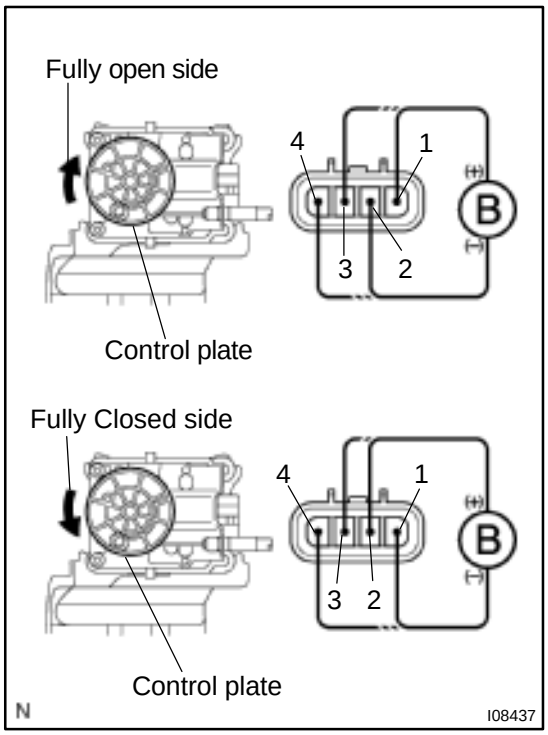

PREPARATION:

(a) Turn ignition switch OFF.

(b) Disconnect the actuator connector.

CHECK:

Connect the positive (+) lead from the battery to terminals 1 and 3 of actuator, connect the negative (–) lead to terminals 2 and 4 of actuator.

OK:

Control arm moves to fully open side

CHECK:

Connect the positive (+) lead from the battery to terminals 2 and 3 of actuator, connect the negative (–) lead to terminals 1 and 4 of actuator.

OK:

Control arm moves to fully colsed side

NG → **Replace cruise control actuator.**

OK

3	Check harness and connector between cruise control ECU and cruise control actuator (See page IN–31).

NG → **Repair or replace harness or connector.**

OK

Check and replace cruise control ECU (See page IN–31).

DI08P–12

DTC	21	Open in Vehicle Speed Sensor Circuit

CIRCUIT DESCRIPTION

The signal from the vehicle speed sensor circuit is sent to cruise control ECU as vehicle speed signal.
The rotor shaft is driven by the gear of the transmission.
For each rotation of the shaft, the vehicle speed sensor sends a 4–pulse signal through the combination meter to the cruise control ECU (See the following installation).
This signal is converted inside the combination meter and sent as a 4–pulse signal to the cruise control ECU.
The ECU calculates the vehicle speed from this pulse frequency.

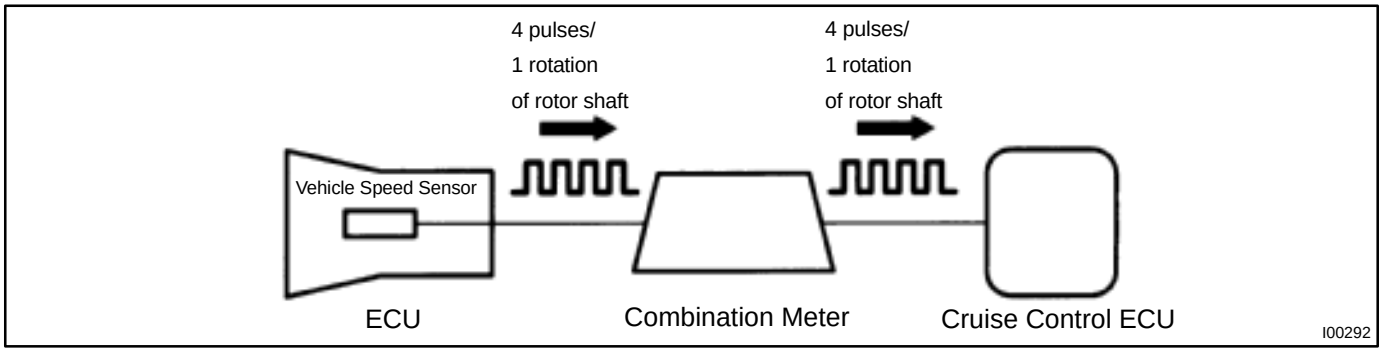

DTC No.	Detection Item	Trouble Area
21	Speed signal is not input to the cruise control ECU while cruise control is set.	●Combination meter ●Harness or connector between cruise control ECU and combination meter, combination meter and vehicle speed sensor ●Vehicle speed sensor ●Cruise control ECU

WIRING DIAGRAM

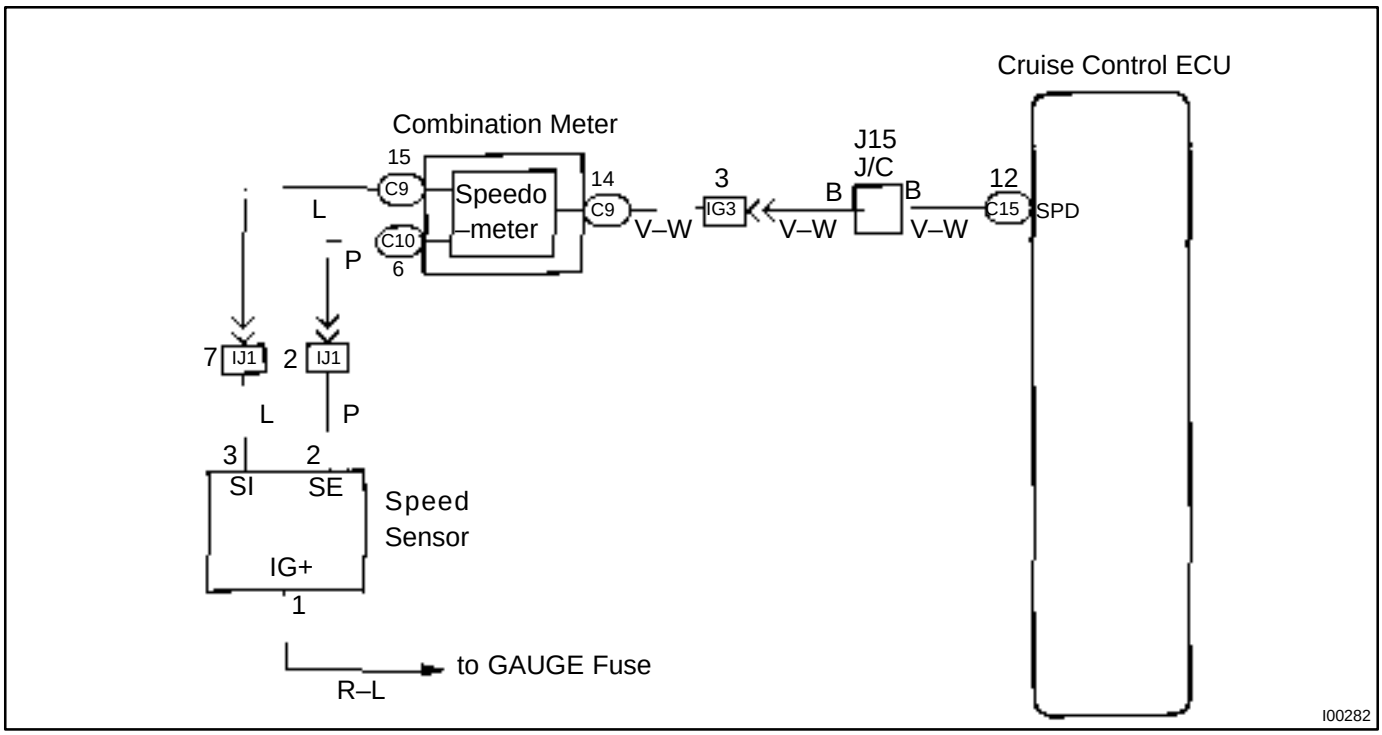

INSPECTION PROCEDURE

1	**Input signal check.**

Input Signal	Indicator Light Blinking Pattern
Drive at about 40 km/h (25 mph) or below	Light: ON — OFF
Drive at about 40 km/h (25 mph) or higher	Light: ON / OFF (blinking)

CHECK:

(a) See input signal check on page DI–870.

(b) Check indicator light operation when driving with vehicle speed above 40 km/h (25 mph), and with vehicle speed below 40 km/h (25 mph).

OK:

Vehicle speed above 40 km/h (25 mph):
Indicator light blinks

Vehicle speed below 40 km/h (25 mph):
Indicator light stays on

OK	**Check and replace cruise control ECU (See page IN–31).**

NG

2	**Check speedometer circuit (See Combination meter troubleshooting on page BE–2).**

NG	**Repair or replace harness, connector or combination meter assembly.**

OK

3	**Check harness and connector between cruise control ECU and combination meter, combination meter and vehicle speed sensor (See page IN–31).**

NG	**Repair or replace harness or connector.**

OK

4	Check vehicle speed sensor (See page BE–47).

NG → Replace vehicle speed sensor.

OK →

Check and replace cruise control ECU (See page IN–31).

DI08Q–10

DTC	23	Vehicle Speed Signal Abnormal

CIRCUIT DESCRIPTION

See page DI–888.

DTC No.	Detection Item	Trouble Area
23	Vehicle speed sensor pulse is abnormal.	●Vehicle speed sensor ●Cruise control ECU

WIRING DIAGRAM

See page DI–888.

INSPECTION PROCEDURE

1	**Check vehicle speed sensor (See page BE–47).**

NG → **Replace vehicle speed sensor.**

OK

Check and replace cruise control ECU (See page IN–31).

DTC	32	Control Switch Circuit (Cruise Control Switch)

CIRCUIT DESCRIPTION

This circuit carries the SET/COAST, RESUME/ACCEL and CANCEL signals (each voltage) to the ECU.

DTC No.	Detection Item	Trouble Area
32	Short in control switch circuit.	□ Cruise control switch □ Harness or connector between cruise control ECU and cruise control switch, cruise control switch and body ground □ Cruise control ECU

WIRING DIAGRAM

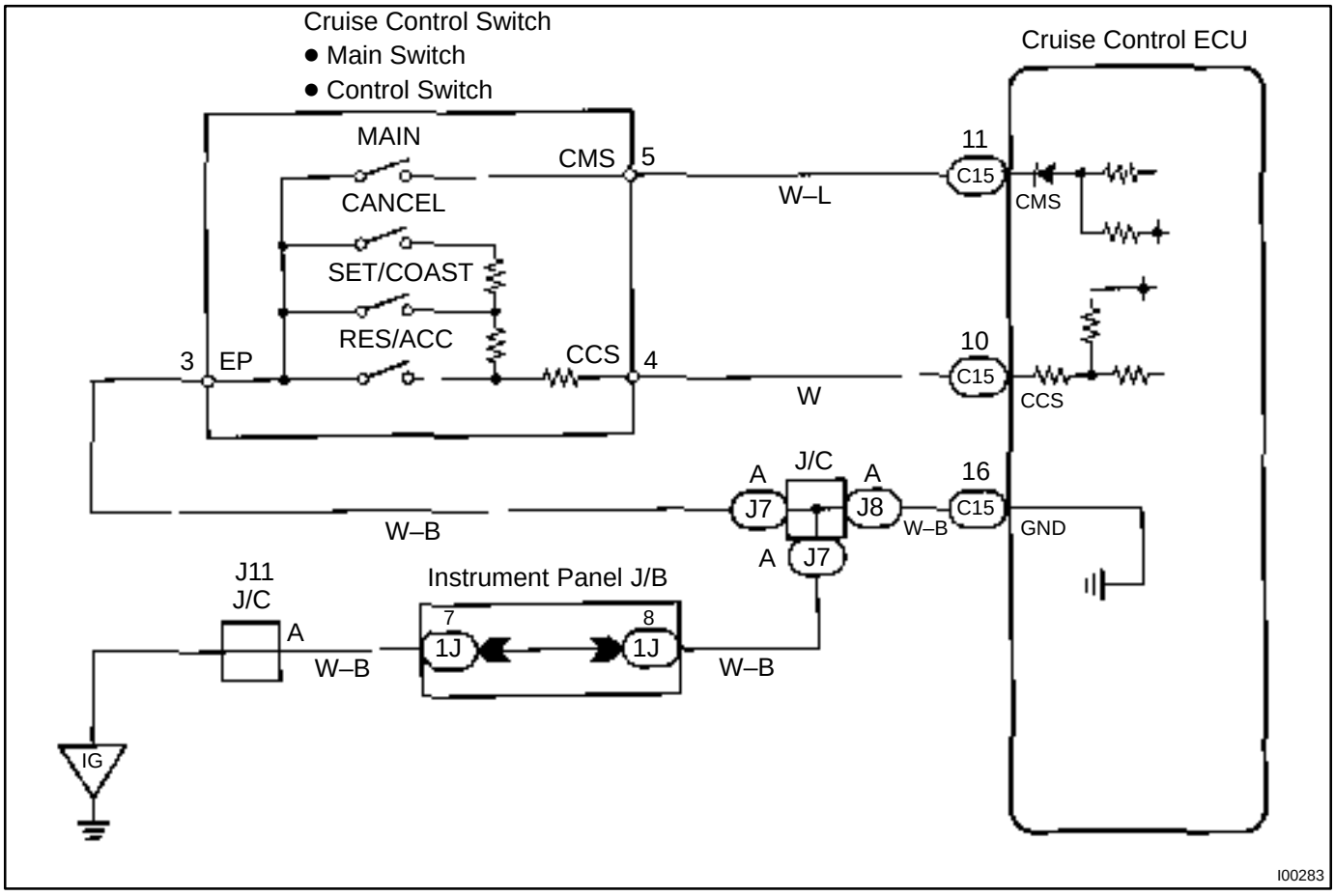

INSPECTION PROCEDURE

1	**Input signal check.**

Input Signal	Indicator Light Blinking Pattern
SET/COAST switch	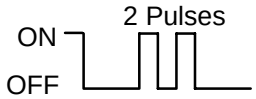
RESUME/ACCEL switch	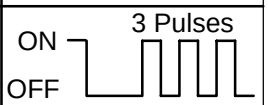
CANCEL switch	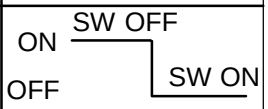

PREPARATION:

See input signal check on page DI–870.

CHECK:

Check the indicator light operation when each of the SET/COAST, RESUME/ACCEL and CANCEL is turned on.

OK:

SET/COAST, RESUME/ACCEL switch

The signals shown in the table on the left should be output when each switch is ON. The signal should disappear when the switch is turned OFF.

CANCEL switch

The indicator light goes off when the cancel switch is turned ON.

OK	**Wait and see.**

NG

2	**Check voltage between terminals CCS of cruise control ECU connector and body ground.**

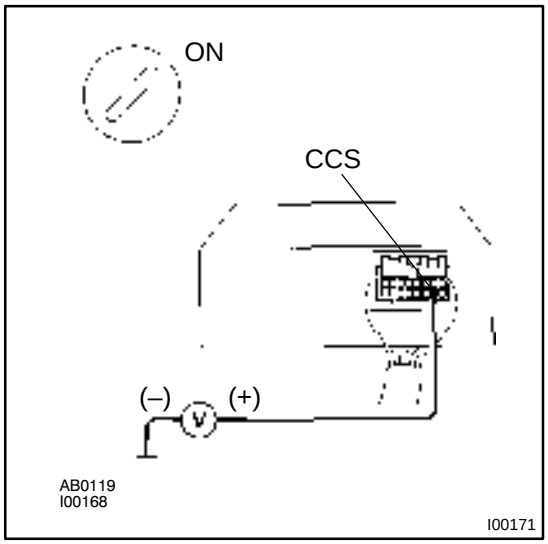

PREPARATION:

(a) Remove the ECU with connector still connected.

(b) Turn ignition switch ON.

CHECK:

Measure voltage between terminals 18 of ECU connector and body ground, when each of the SET/COAST, RESUME/ACCEL and CANCEL is turned ON.

Switch position	Resistance (V)
Neutral	10 – 16 V
RES/ACC	0.8 – 3.7 V
SET/COAST	2.5 – 6.3 V
CANCEL	4.2 – 8.8 V

NG	**Proceed to next circuit inspection shown on problem symptoms table (See page DI–879).**

OK

3	**Check control switch.**

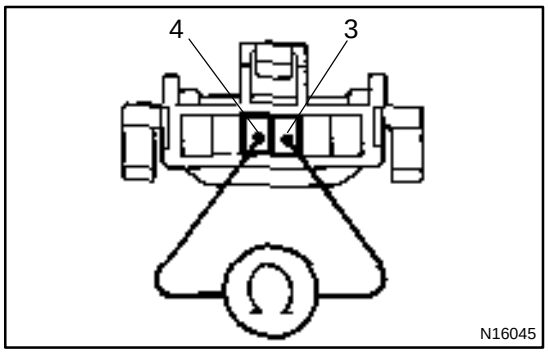

PREPARATION:

(a) Remove steering wheel center pad.

(b) Disconnect the control switch connector.

CHECK:

Measure resistance between terminals 3 and 4 of control switch connector when control switch is operated.

Switch position	Resistance (Ω)
Neutral	∞ (No continuity)
RES/ACC	50 – 80
SET/COAST	180 – 220
CANCEL	400 – 440

NG → **Replace control switch.**

OK ↓

4	**Check harness and connector between cruise control ECU and cruise control switch, cruise control switch and body ground (See page IN–31).**

NG → **Repair or replace harness or connector.**

OK ↓

5	**Input signal check (See step 1).**

OK → **Wait and see.**

NG ↓

Check and replace cruise control ECU (See page IN–31).

DI08S–10

DTC	51	Idle Signal Circuit

CIRCUIT DESCRIPTION

When the idle switch is turned ON, a signal is sent to the ECU. The ECU uses this signal to correct the discrepancy between the throttle valve position and the actuator position sensor value to enable accurate cruise control at the set speed. If the idle switch is malfunctioning, problem symptoms also occur in the engine, so also inspect the engine.

DTC No.	Detection Item	Trouble Area
51	Short in idle signal circuit.	●Harness or connector between ECM and throttle position sensor ●Throttle position sensor ●Harness or connector between cruise control ECU and ECM ●Cruise control ECU

WIRING DIAGRAM

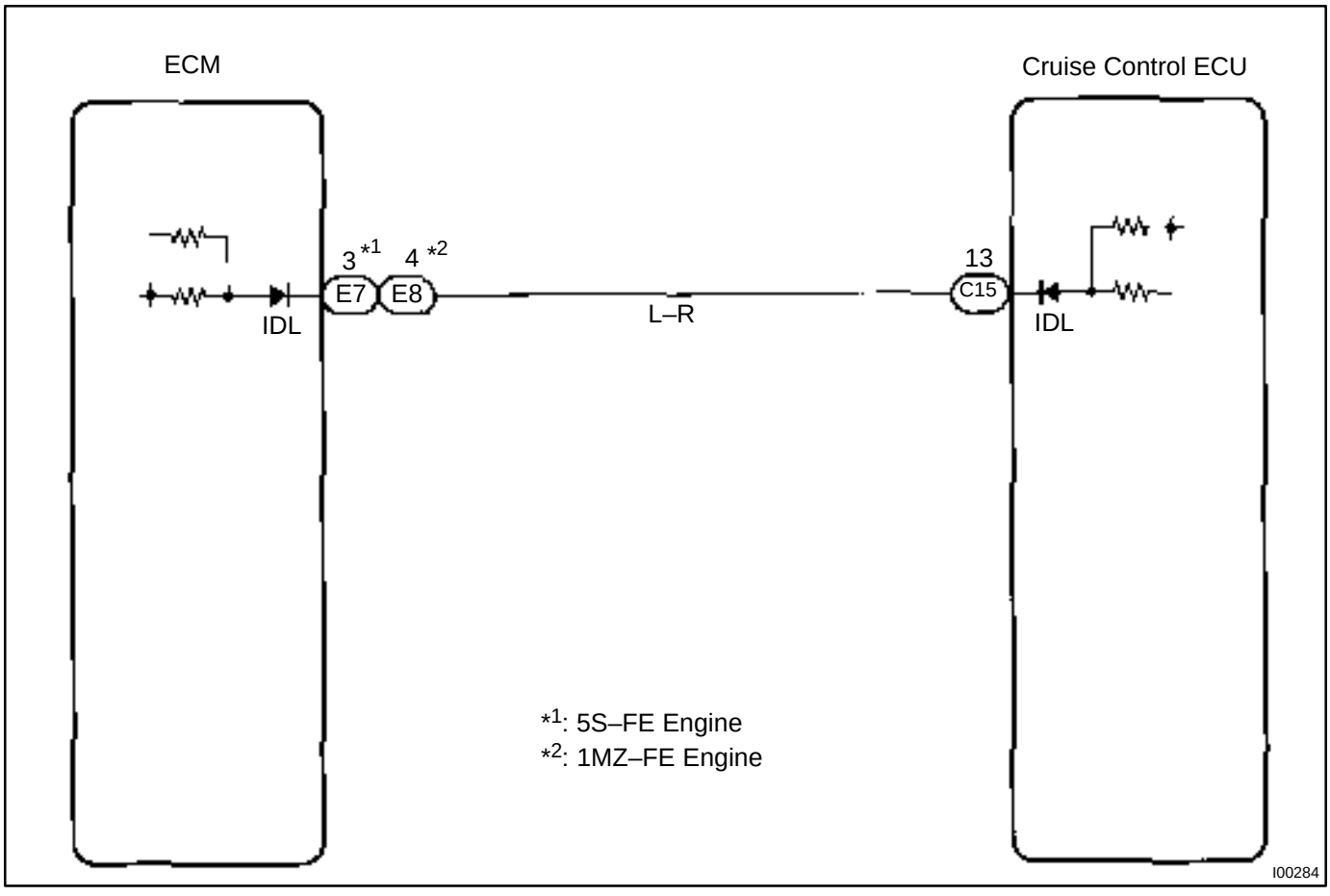

INSPECTION PROCEDURE

1	**Check voltage between terminal IDL of cruise control ECU connector and body ground.**

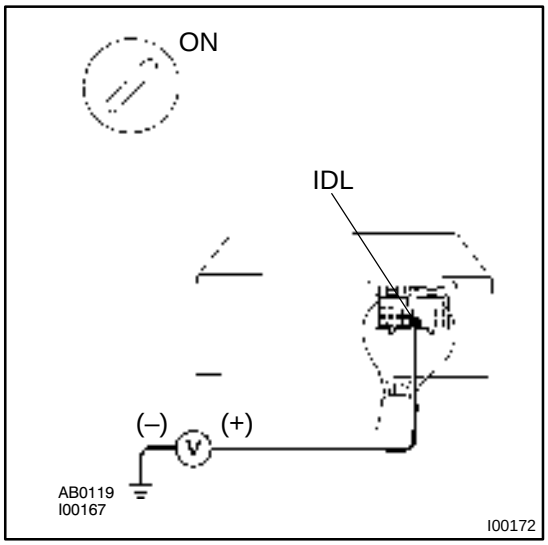

PREPARATION:

(a) Remove the ECU with connector still connected.
(b) Disconnect the ECM connector.
(c) Turn ignition switch ON.

CHECK:

Measure voltage between terminal IDL of ECU connector and body ground when the throttle valve is fully closed and fully opened.

OK:

Throttle valve position	Voltage
Fully opened	10 – 14 V
Fully closed	Below 2 V

OK → **Proceed to next circuit inspection shown on problem symptoms table (See page DI–879).**

NG

2	**Check harness and connector between ECM and throttle position sensor (See page IN–31).**

NG → **Repair or replace harness or connector.**

OK

3	**Check throttle position sensor circuit (See page DI–243).**

NG → **Replace throttle position sensor.**

OK

4	Check throttle position sensor.

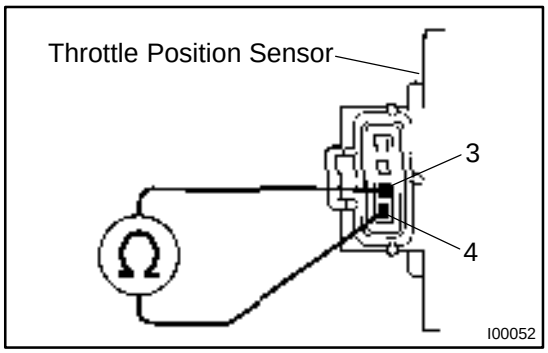

PREPARATION:

Disconnect the throttle position sensor connector.

CHECK:

Measure resistance between terminals 3 and 4 of throttle position sensor connector when the throttle valve is fully closed and fully opened.

OK:

Throttle valve position	Resistance
Fully opened	1 MΩ or higher
Fully closed	Below 2.3 kΩ

NG → **Replace throttle position sensor.**

OK

5	Check for open and short in harness and connector between cruise control ECU and ECM (See page IN–31).

NG → **Repair or replace harness or connector.**

OK

Check and replace cruise control ECU (See page IN–31).

DI08T–11

Stop Light Switch Circuit

CIRCUIT DESCRIPTION

When the brake pedal is depressed, the stop light switch sends a signal to the ECU. When the ECU receives this signal, it cancels the cruise control.
A fail–safe function is provided so that the cancel functions normally, even if there is a malfunction in the stop light signal circuit.
The cancel conditions are: Battery positive voltage at terminal STP–
When the brake is ON, battery positive voltage normally is applied through the STOP fuse and stop light switch to terminal STP– of the ECU, and the ECU turns the cruise control OFF.
If the harness connected to terminal STP– has an open circuit, terminal STP– will have battery positive voltage and the cruise control will be turned OFF.
Also, when the brake is ON, the magnetic clutch circuit is cut mechanically by the stop light switch, turning the cruise control OFF. (See page DI–883 for operation of the magnetic clutch)

WIRING DIAGRAM

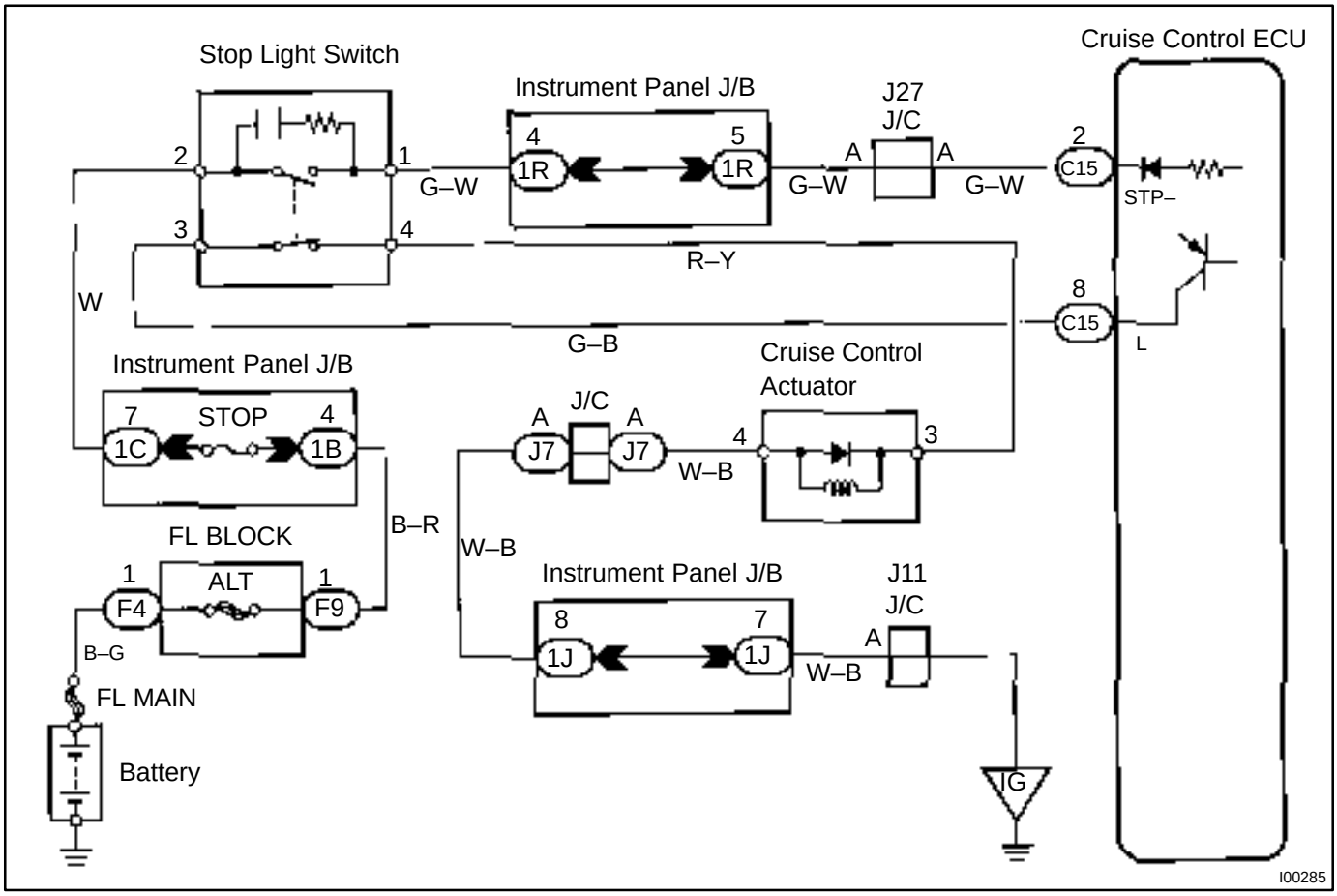

INSPECTION PROCEDURE

1	**Check operation of stop light.**

CHECK:

Check that stop light comes ON when brake pedal is depressed, and turns OFF when brake pedal is released.

NG → **Check stop light system (See page BE–2).**

OK

2	**Input signal check.**

Input Signal	Indicator Light Blinking Pattern
Stop Light switch ON	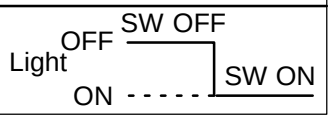

CHECK:

(a) See input signal check on DI–870.

(b) Check the indicator light when the brake pedal is depressed.

OK:

The indicator light goes OFF when the brake pedal is depressed.

OK → **Proceed to next circuit inspection shown on problem symptoms table (See page DI–879).**

NG

3	Check voltage between terminal STP– of cruise control ECU connector and body ground.

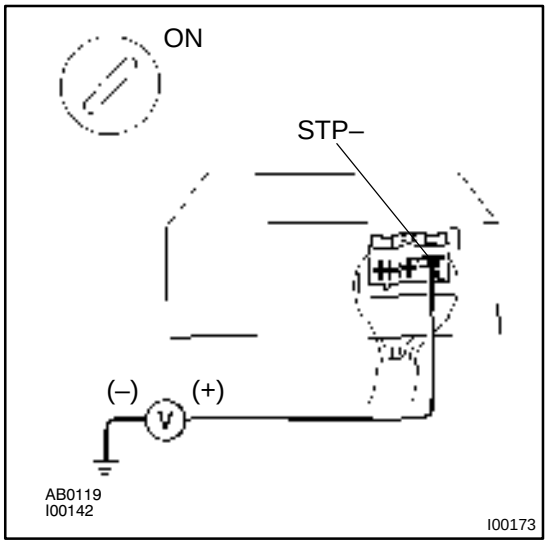

PREPARATION:

(a) Remove the ECU with connectors still connected.

(b) Turn ignition switch ON.

CHECK:

Measure voltage between terminal STP– of cruise control ECU connector and body ground, when the brake pedal is depressed and released.

OK:

Depressed	10 – 14 V
Released	Below 1 V

OK → **Proceed to next circuit inspection shown on problem symptoms table (See page DI–879).**

NG

4	Check for open in harness and connectors between terminal STP– of cruise control ECU and stop light switch (See page IN–31).

NG → **Repair or replace harness or connector.**

OK

Check and replace cruise control ECU (See page IN–31).

DI08U–11

Electronically Controlled Transmission Communication Circuit

CIRCUIT DESCRIPTION

When driving uphill under the cruise control, in order to reduce shifting due to ON–OFF overdrive operation and to provide smooth driving, when down shifting in the electronically controlled transmission occurs, a signal to prevent upshift until the end of the uphill slope is sent from the cruise control ECU to the electronically controlled transmission.

Terminal ECT of the cruise control ECU detects the shift change signal (output to electronically controlled transmission No. 2 solenoid) from the ECM.

If the vehicle speeds down, also when terminal ECT of the cruise control ECU receives down shifting signal, it sends a signal from terminal OD to ECM to cut overdrive until the end of the uphill slope, and the gear shifts are reduced and gear shift points in the electronically controlled transmission are changed.

WIRING DIAGRAM

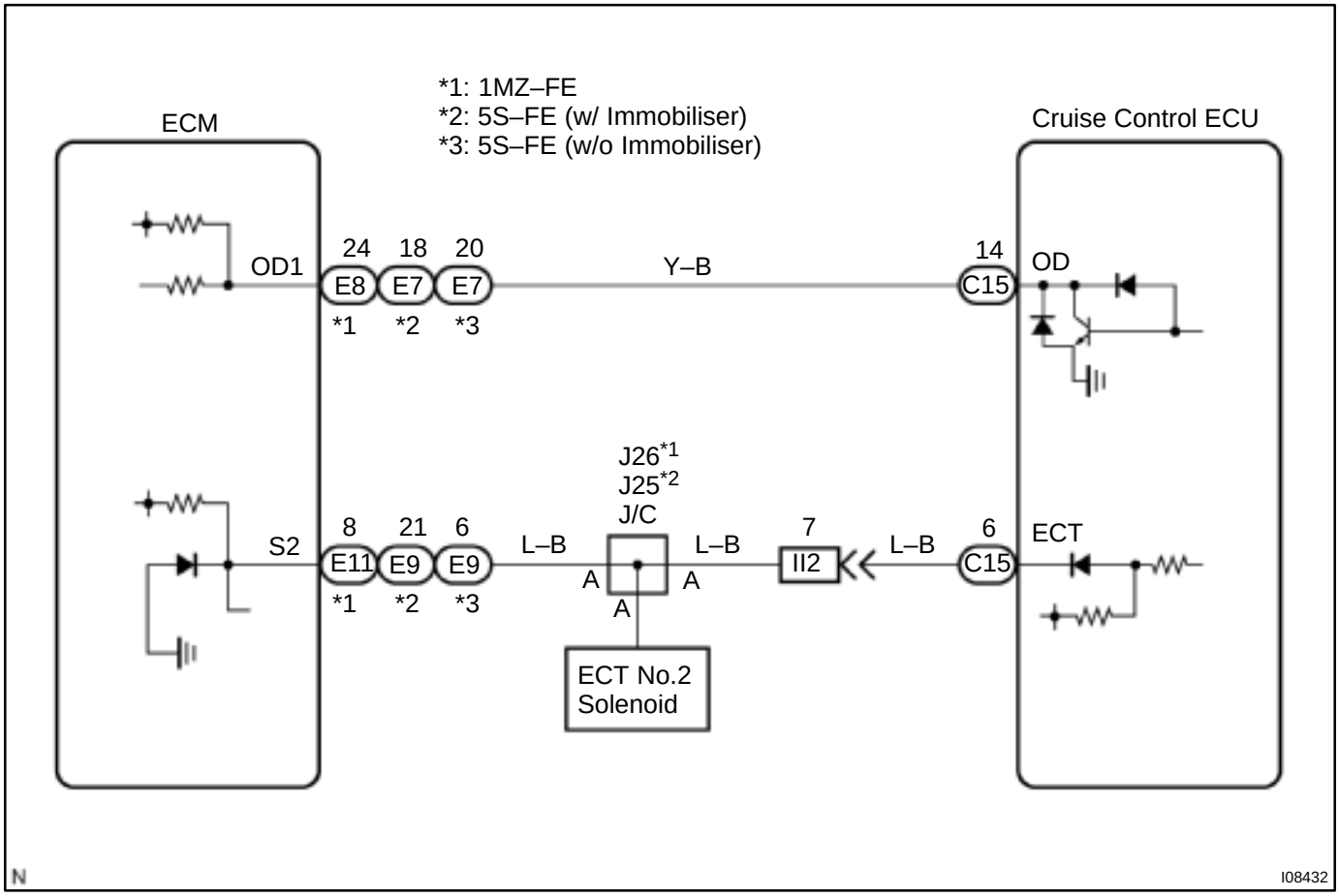

INSPECTION PROCEDURE

1	**Check operation of overdrive.**

PREPARATION:

Test drive after engine warms up.

CHECK:

Check that overdrive ON ↔ OFF occurs by operation of OD switch ON–OFF.

NG → **Check and repair electronically controlled transmission (See page DI–389).**

OK

2	**Check voltage between terminal OD of harness side connector of cruise control ECU and body ground.**

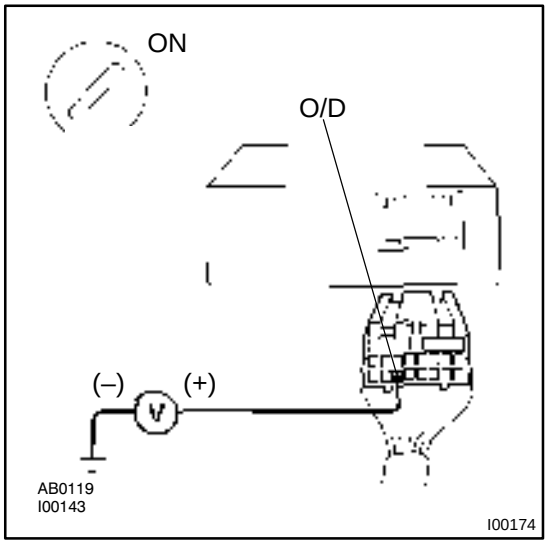

PREPARATION:

(a) Remove the ECU with connector still connected.
(b) Turn ignition switch ON.
(c) Disconnect the ECU connector.

CHECK:

Measure voltage between terminal OD of harness side connector of ECU and body ground.

OK:

Voltage: 10 – 14 V

NG → **Go to step 5.**

OK

3	Check voltage between terminal ECT of cruise control ECU connector and body ground (On test drive).

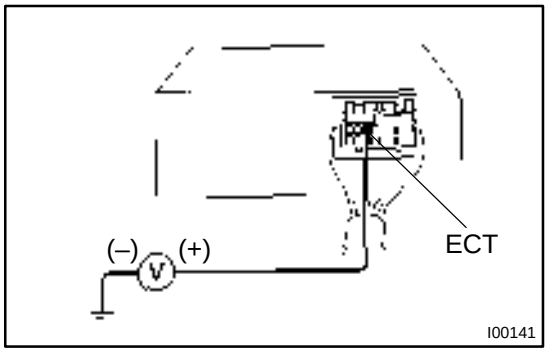

PREPARATION:

(a) Connect the ECU connector.

(b) Test drive after engine warms up.

CHECK:

Check voltage between terminal ECT of ECU connector and body ground when OD switch is ON and OFF.

OK:

OD switch position	Voltage
ON	8 – 14 V
OFF	Below 0.5 V

OK → **Proceed to next circuit inspection shown on problem symptoms table (See page DI–879).**

NG

4	Check harness and connector between terminal ECT of cruise control ECU and electronically controlled transmission solenoid (See page IN–31).

NG → **Repair or replace harness or connector.**

OK

Check and replace cruise control ECU.

5	Check harness and connector between terminal OD of cruise control ECU and terminal OD1 of ECM (See page IN–31).

NG → **Repair or replace harness or connector.**

OK

Check and replace cruise control ECU (See page IN–31).

Park/Neutral Position Switch Circuit

CIRCUIT DESCRIPTION

When the shift position is except D, a signal is sent from the park/neutral position switch to the ECU. When this signal is input during cruise control driving, the ECU cancels the cruise control.

WIRING DIAGRAM

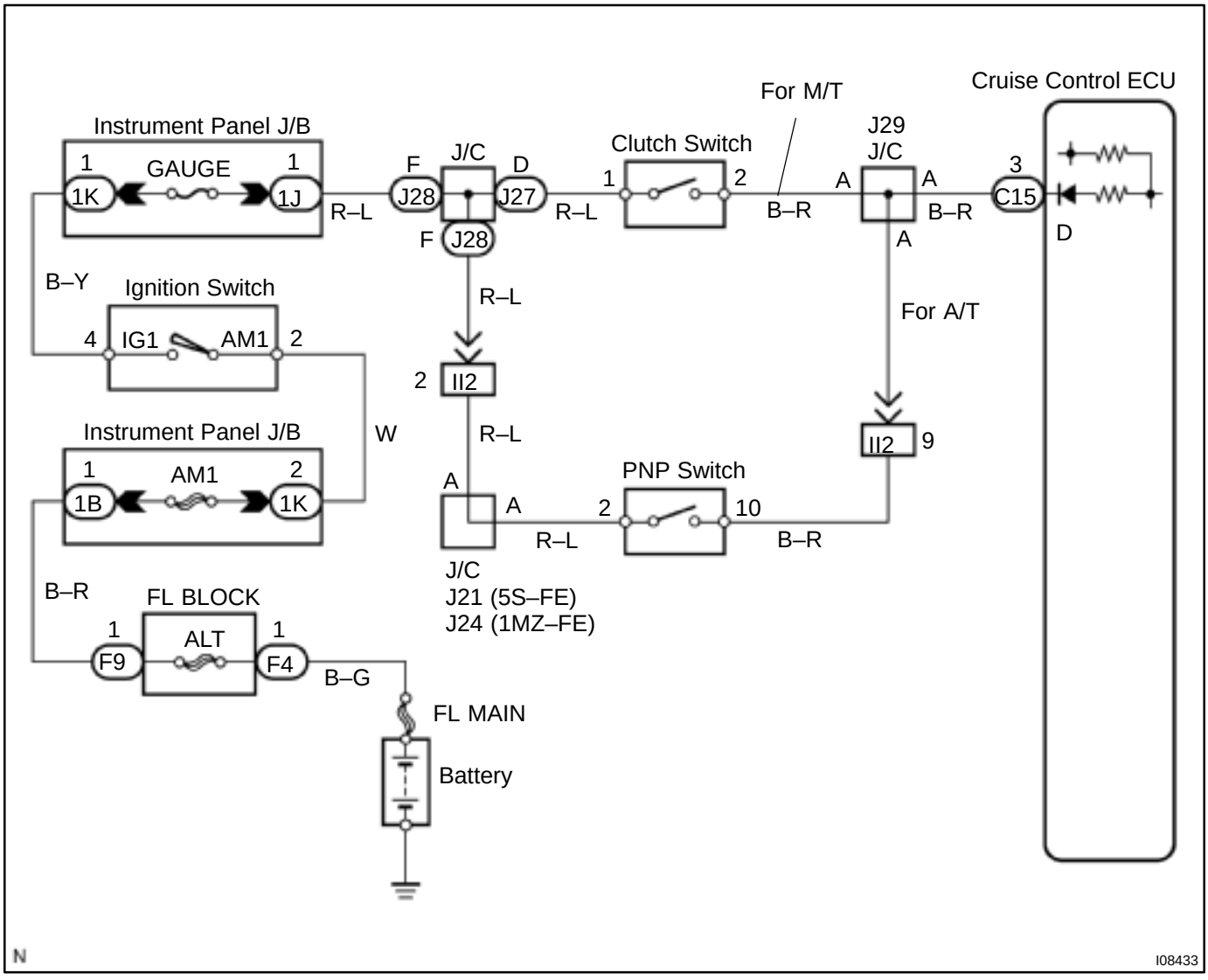

INSPECTION PROCEDURE

1	**Check starter operation.**

CHECK:

Check that the starter operates normally and that the engine starts.

NG → **Proceed to engine troubleshooting. (5S–FE: See page ST–1) (1MZ–FE: See page ST–1).**

OK

2	**Input signal check.**

Input Signal	Indicator Light Blinking Pattern
Turn PNP switch OFF (Shift to positions except D)	Light: ON — SW ON; OFF — SW OFF

PREPARATION:

See input signal check on page DI–870.

CHECK:

Check the indicator light when shifting into positions except D.

OK:

The indicator light goes off when shifting into positions except D.

OK → **Proceed to next circuit inspection shown on problem symptoms table (See page DI–879).**

NG

3	**Check voltage between terminal D of cruise control ECU connector and body ground.**

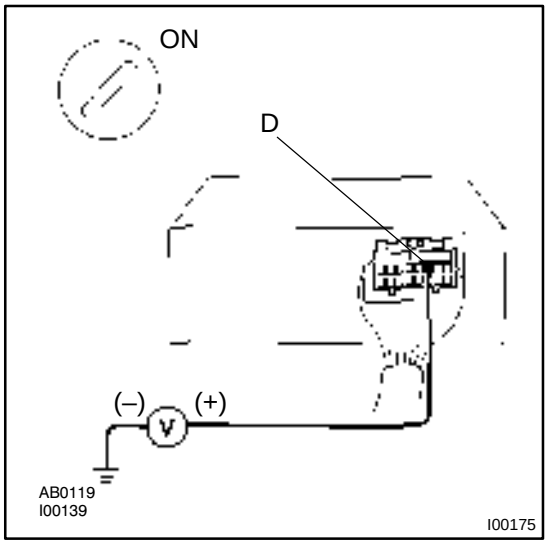

PREPARATION:

Turn ignition switch ON.

CHECK:

Measure voltage between terminal D of ECU connector and body ground when shifting into D position and other positions.

OK:

Shift Position	Voltage
D position	10 – 14 V
Other positions	Below 1 V

OK → **Proceed to next circuit inspection shown on problem symptoms table (See page DI–879).**

NG

4	**Check harness and connector between cruise control ECU and park/neutral position switch (See page IN–31).**

NG → **Repair or replace harness or connector.**

OK

Check and replace cruise control ECU (See page IN–31).

DI08W–04

Clutch Switch Circuit

CIRCUIT DESCRIPTION

When the clutch pedal is depressed, the clutch switch sends a signal to the cruise control ECU. When the signal is input to the cruise control ECU during cruise control driving, the cruise control ECU cancels cruise control.

WIRING DIAGRAM

Refer to PNP switch circuit on page DI–904.

INSPECTION PROCEDURE

1	**Check starter operation.**

CHECK:

Check that the starter operates normally and that the engine starts.

NG → **Proceed to engine troubleshooting (5S–FE: See page ST–1) (1MZ–FE: See page ST–1).**

OK

2	**Input signal check.**

Input Signal	Indicator Light Blinking Pattern
Clutch switch OFF (Depress clutch pedal)	Light: ON (SW ON) / OFF (SW OFF)

PREPARATION:

See input signal check on page DI–870.

CHECK:

Check the indicator lights when clutch pedal is depressed.

OK:

The indicator light goes off when shifting into clutch pedal is depressed.

OK → **Proceed to next circuit inspection shown on problem symptoms table (See page DI–879).**

NG

3	**Check voltage between terminal D of cruise control ECU and body ground.**

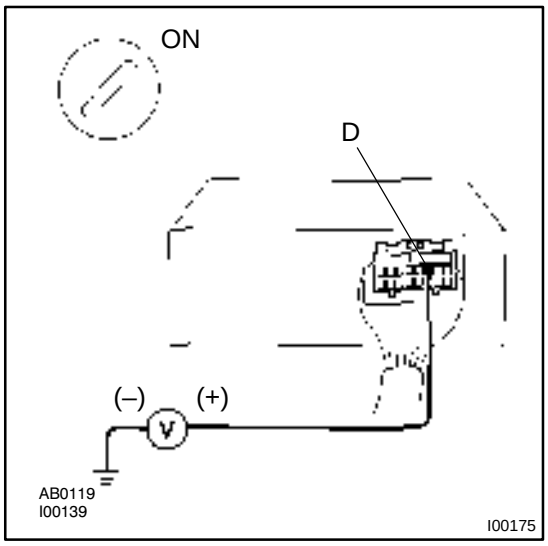

PREPARATION:

Turn ignition switch ON.

CHECK:

Measure voltage between terminal D of cruise control ECU connector and body ground when clutch pedal is depressed and pushed in.

OK:

Shift Position	Voltage
Clutch pedal depressed	10 – 14 V
Clutch pedal pushed in	Below 1 V

OK → **Proceed to next circuit inspection shown on problem symptoms table (See page DI–879).**

NG

4	**Check for open in harness and connector between ECU and GAUGE fuse (See page IN–31).**

NG → **Repair or replace harness or connector.**

OK

Check and replace cruise control ECU (See page IN–31).

DI08X–11

ECU Power Source Circuit

CIRCUIT DESCRIPTION

The ECU power source supplies power to the actuator and sensors, etc, when terminal GND and the cruise control ECU case are grounded.

WIRING DIAGRAM

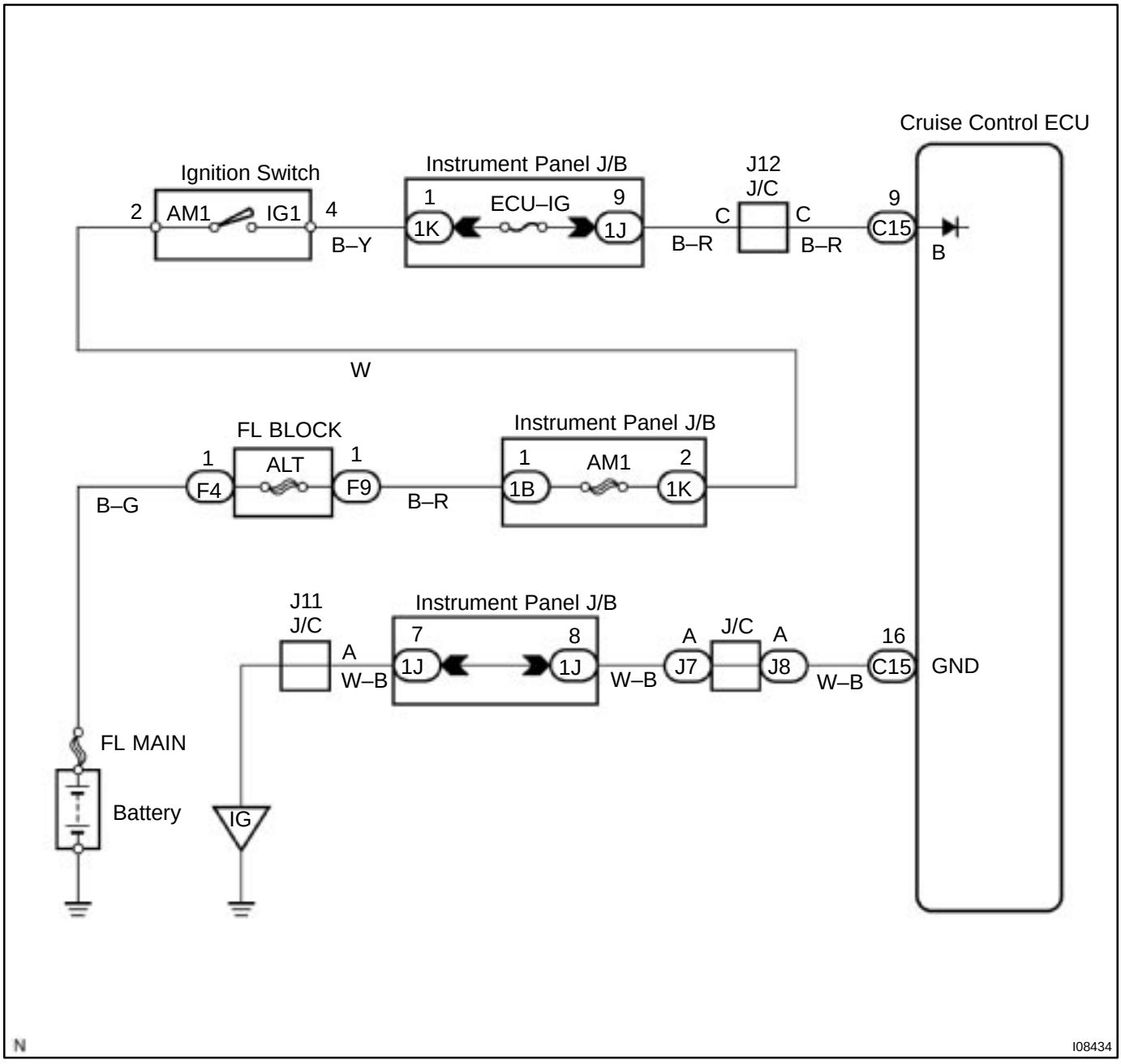

INSPECTION PROCEDURE

1	Check ECU–IG fuse.

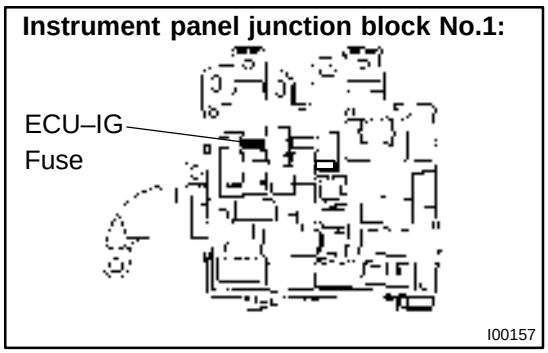

PREPARATION:
Remove the ECU–IG fuse from instrument panel junction block No.1.
CHECK:
Check continuity of ECU–IG fuse.
OK:
Continuity

NG → **Check for short in all the harness and components connected to ECU–IG fuse.**

OK

2	Check voltage between terminals B and GND of cruise control ECU connector.

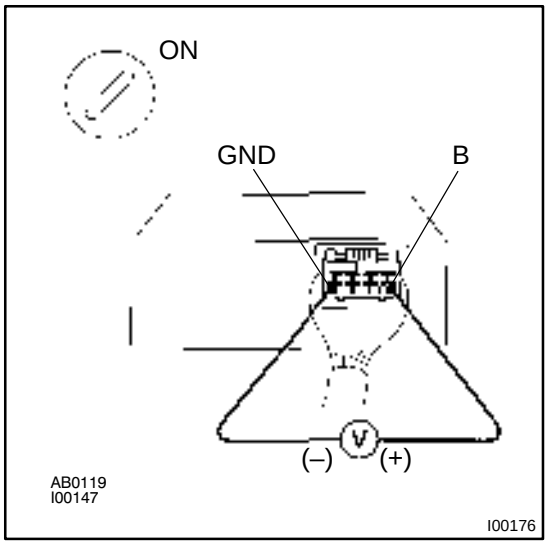

PREPARATION:
(a) Remove the ECU with connector still connected.
(b) Turn ignition switch ON.
CHECK:
Measure voltage between terminals B and GND of ECU connector.
OK:
10 – 14 V

OK → **Proceed to next circuit inspection shown on problem symptoms table (See page DI–879).**

NG

3	**Check resistance between terminal GND of cruise control ECU connector and body ground.**

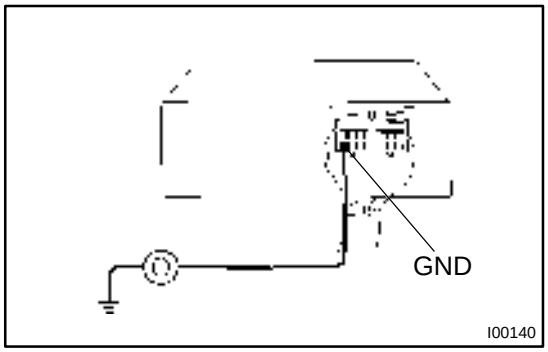

CHECK:

Measure resistance between terminal GND of ECU connector and body ground.

OK:

Resistance: Below 1 Ω

NG → **Repair or replace harness or connector.**

OK

Check and repair harness and connector between cruise control ECU and battery (See page IN–31).

DI08Z–16

Main Switch Circuit (Cruise Control Switch)

CIRCUIT DESCRIPTION

When the cruise control main switch is turned OFF, the cruise control does not operate.

WIRING DIAGRAM

See page DI–892.

INSPECTION PROCEDURE

1	**Check voltage between terminal CMS of cruise control ECU connector and body ground.**

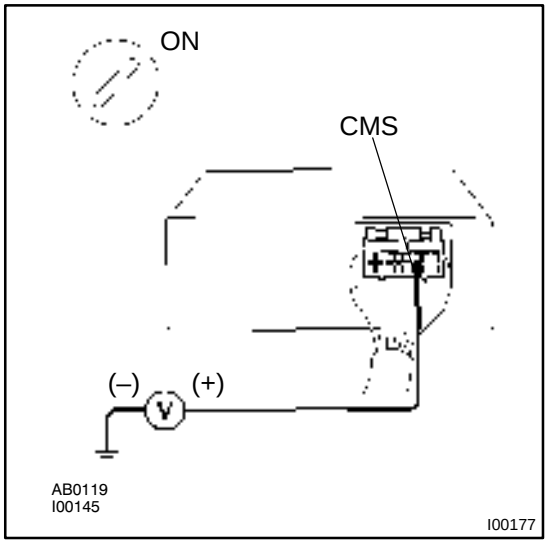

PREPARATION:

(a) Remove the ECU with connector still connected.

(b) Turn ignition switch ON.

CHECK:

Measure voltage between terminal CMS of cruise control ECU connector when main switch is held ON and OFF.

OK:

Main switch	Voltage
OFF	10 – 14 V
ON	Below 0.5 V

OK

Proceed to next circuit inspection shown on problem symptoms table (See page DI–879).

NG

2	**Check main switch continuity.**

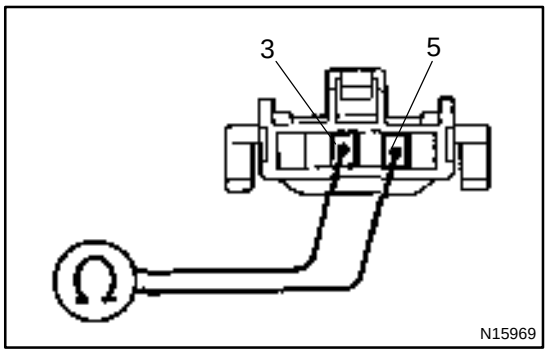

PREPARATION:

(a) Remove steering wheel center pad. (See page SR–11)

(b) Disconnect the control switch connector.

CHECK:

Check continuity between terminals 3 and 5 of control switch connector when main switch is held ON and OFF.

OK:

Switch position	Tester connection	Specified condition
OFF	3 – 5	No continuity
Hold ON	3 – 5	Continuity

NG → **Replace control switch.**

OK

3	**Check harness and connector between cruise control ECU and main switch (See page IN–31).**

NG → **Repair or replace harness or connector.**

OK

Check and replace cruise control ECU (See page IN–31).

CRUISE MAIN Indicator Light Circuit

CIRCUIT DESCRIPTION

When the cruise control main switch is turned ON, CRUISE MAIN indicator light lights up.

WIRING DIAGRAM

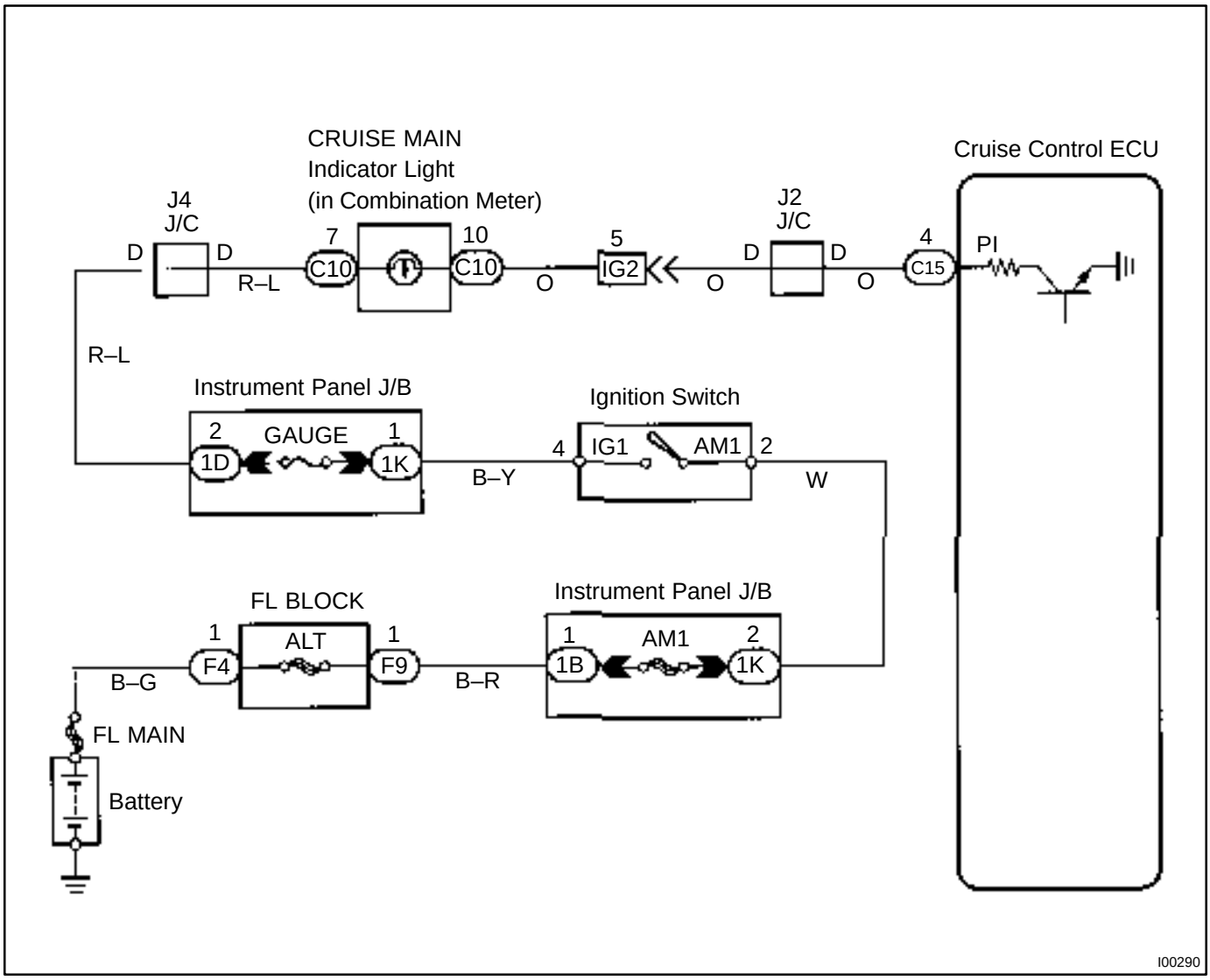

INSPECTION PROCEDURE

1	**Check voltage between terminals PI and GND of cruise control ECU connector.**

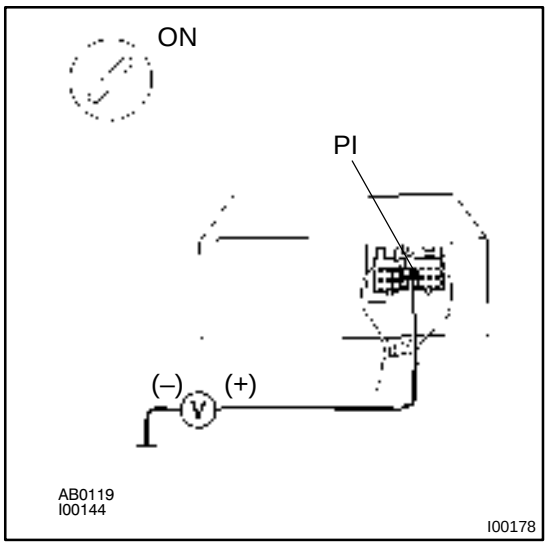

PREPARATION:
Tun ignition switch ON.
CHECK:
Measure voltage between terminals PI and GND of cruise control ECU connector when main switch is ON and OFF.
OK:

Switch position	Voltage
OFF	10 – 16 V
ON	Below 1.2 V

OK → **Proceed to next circuit inspection shown on problem symptoms table (See page DI–879).**

NG

2	**Check combination meter (See page BE–2).**

NG → **Replace combination meter.**

OK

Check and replace cruise control ECU (See page IN–31).

DI091–11

Diagnosis Circuit

CIRCUIT DESCRIPTION

This circuit sends a signal to the ECU that outputs DTC.

WIRING DIAGRAM

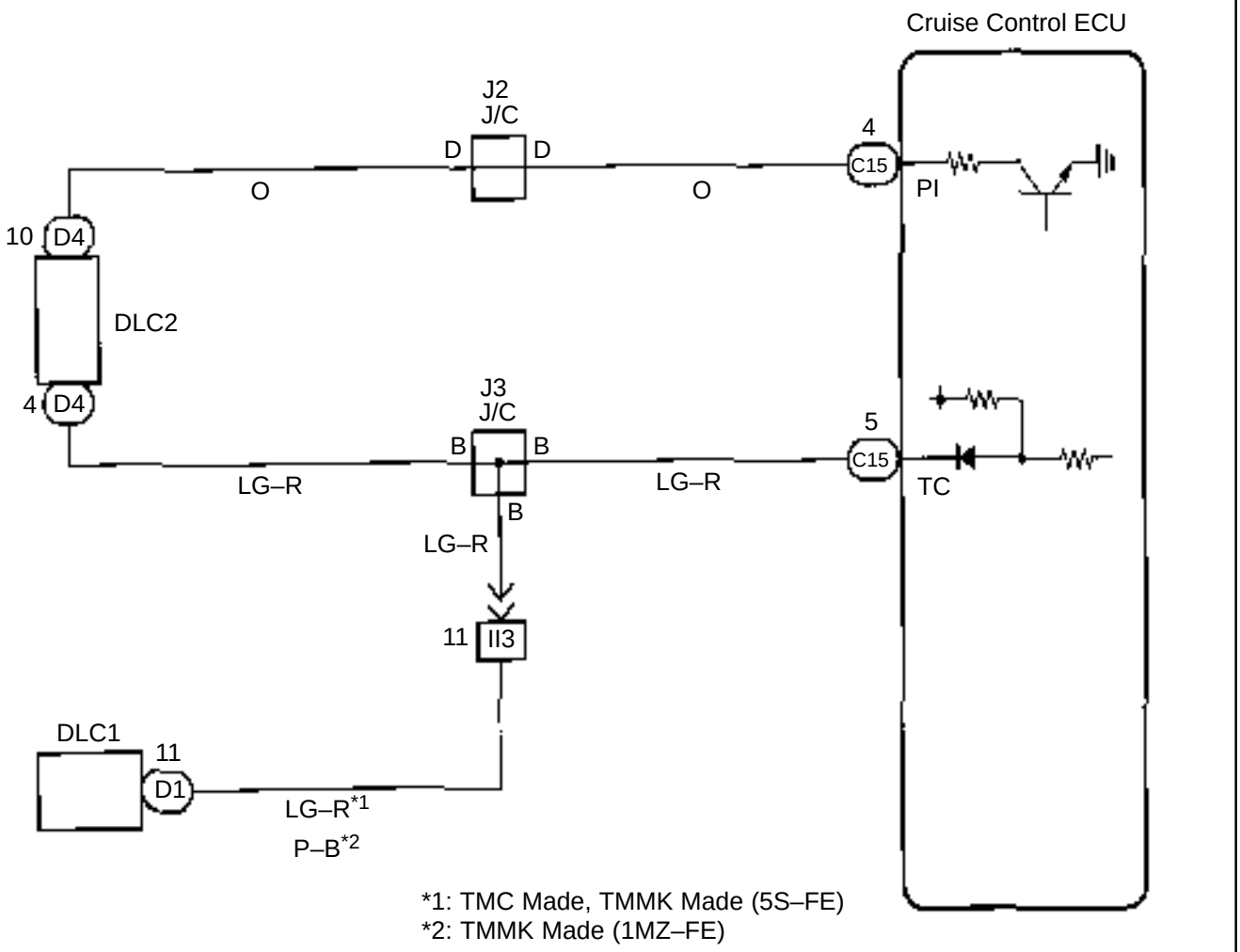

INSPECTION PROCEDURE

1	**Check voltage between terminals Tc and E_1 of DLC2.**

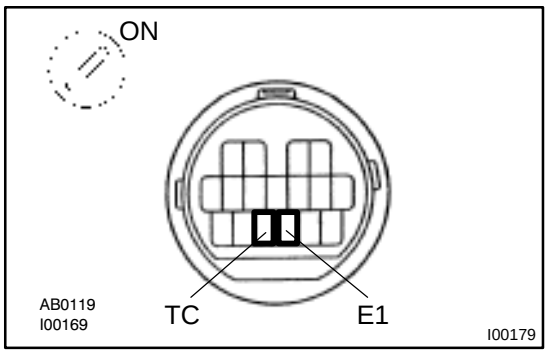

PREPARATION:
Turn ignition switch ON.
CHECK:
Measure voltage between terminals Tc and E_1 of DLC2.
OK:
Voltage: 10 – 14 V

OK → **Proceed to next circuit inspection shown on problem symptoms table (See page DI–879).**

NG

2	**Check harness and connector between cruise control ECU and DLC2, DLC2 and body ground (See page IN–31).**

NG → **Repair or replace harness or connector.**

OK

Check and replace cruise control ECU (See page IN–31).

DI092–07

Actuator Control Cable

INSPECTION PROCEDURE

1	**Actuator control cable inspection**

OK:

(a) Check that the actuator and control cable throttle link are properly installed and that the cable and link are connected correctly.

(b) Check that the actuator and bell crank operate smoothly.

(c) Check that the cable is not loose or too tight.

OK:

Freeplay: less than 10 mm

HINT:

- If the control cable is very loose, the vehicle's loss of speed going uphill will be large.
- If the control cable is too tight, the idle RPM will become high.

ENGINE IMMOBILISER SYSTEM

DI1KE–04

HOW TO PROCEED WITH TROUBLESHOOTING

Troubleshooting in accordance with the procedure on the following pages.

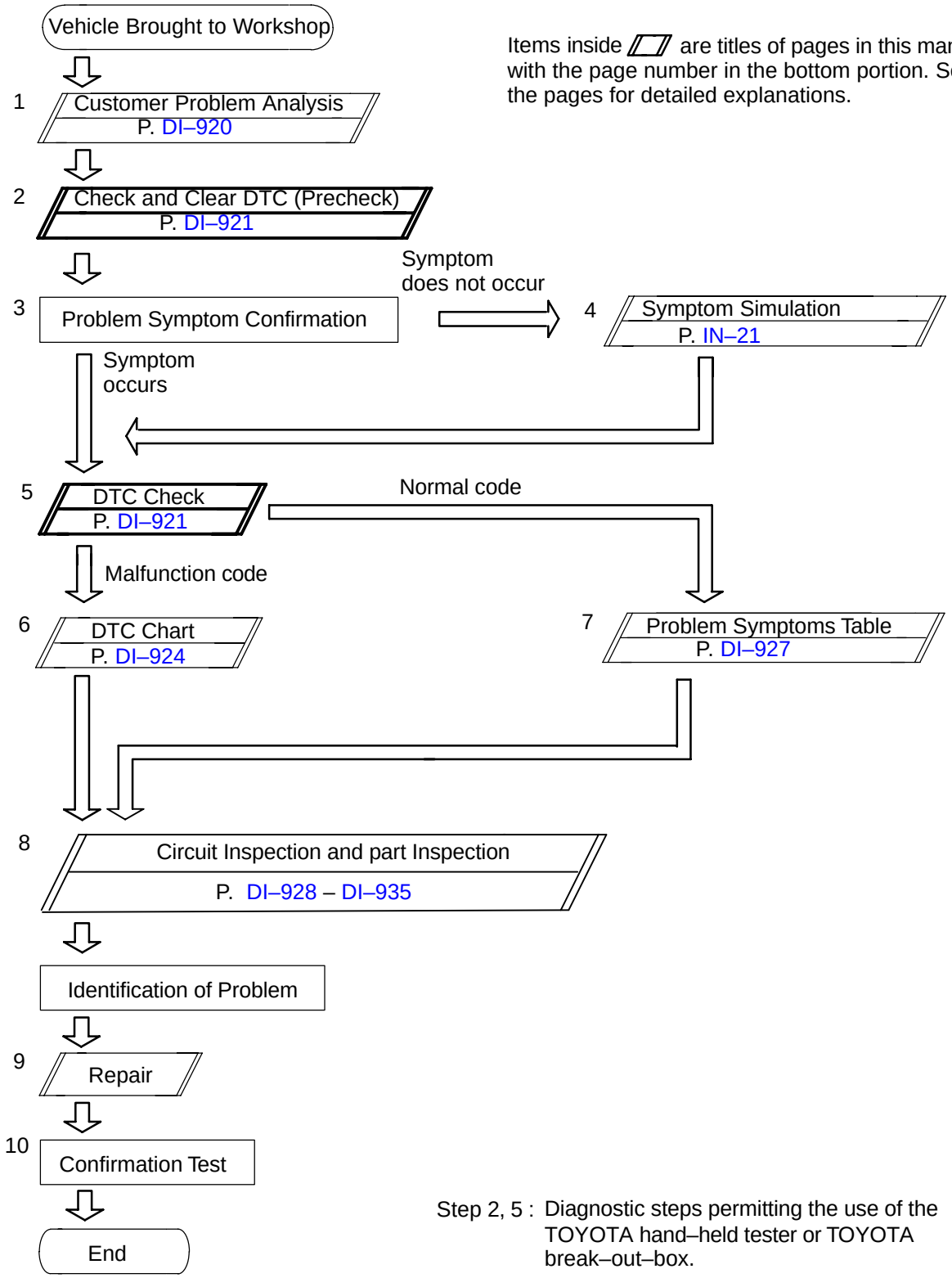

Items inside ▱ are titles of pages in this manual, with the page number in the bottom portion. See the pages for detailed explanations.

Step 2, 5 : Diagnostic steps permitting the use of the TOYOTA hand–held tester or TOYOTA break–out–box.

DI1KF–04

CUSTOMER PROBLEM ANALYSIS CHECK

ENGINE IMMOBLISER Check Sheet

Inspector's Name :

Customer's Name		**Registration No.**	
		Registration Year	/ /
		Frame No.	
Date Vehicle Brought In	/ /	**Odometer Reading**	km miles

Date Problem First Occurred	/ /
Frequency Problem Occurs	☐ Continuous ☐ Intermittent (times a day)

Symptoms	☐ Immobiliser is not set. (Engine starts with key codes other than the registered key code.)
	☐ Engine does not start.

Check Item	**Malfunction Indicator Lamp**	☐ Normal ☐ Remains ON ☐ Does not Light Up

DTC Check	**1st Time**	☐ Normal Code ☐ Malfunction Code (Code)
	2nd Time	☐ Normal Code ☐ Malfunction Code (Code)

DI1KG–04

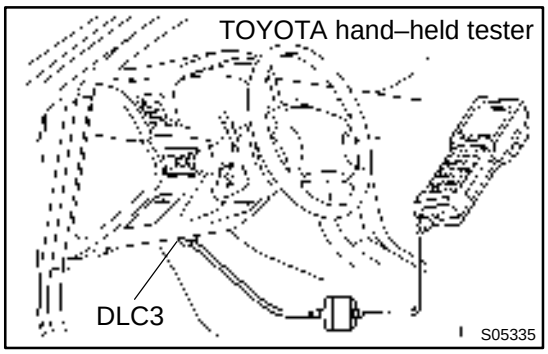

PRE–CHECK

1. DIAGNOSIS SYSTEM

(a) Description

ECM controls the function of immobiliser on this vehicle. Data of the immobiliser or DTC can be read form DLC3 of the vehicle. When a trouble occurs in immobiliser, MIL does not light ON but DTC inspection is performed.

Therefore when there seems to be a trouble with immobiliser, use TOYOTA hand–held tester or SST to check and troubleshoot it.

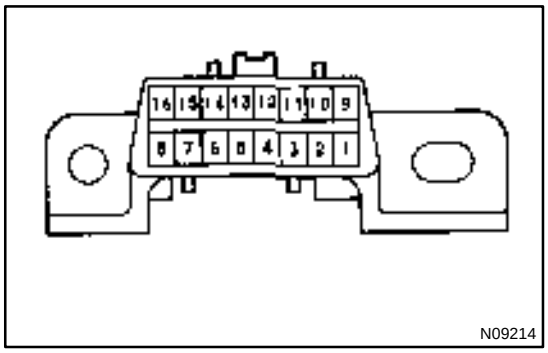

(b) DLC3 INSPECTION

The vehicle's ECM uses ISO 9141–2 for communication. The terminal arrangement of DLC3 complies with SAEJ1962 and matches the ISO 9141–2 format.

Tester connection	condition	Specified condition
7 (Bus ~ Line) – 5 (Signal ground)	During communication	Pulse generation
4 (chassis Ground) – Body	Always	1 Ω or less
5 (Signal Ground) – Body	Always	1 Ω or less
16 (B+) – Body	Always	9 – 14 V

HINT:

If your display shows "UNABLE TO CONNECT TO VEHICLE" when you have connected the cable of OBD ll scan tool or TOYOTA hand–held tester to DLC3, turned the ignition switch ON and operated the scan tool, there is a problem on the vehicle side or tool side.

(1) If communication is normal when the tool is connected to another vehicle, inspect DLC3 on the original vehicle.

(2) If communication is still impossible when the tool is connected to another vehicle, the problem is probably in the tool itself, so consult the Service Department listed in the tool's instruction manual.

2. INSPECT DIAGNOSIS

(a) Check the DTC (Using TOYOTA hand–held tester)

(1) Prepare the OBD ll scan tool (complying with SAEJ 1978) or TOYOTA hand–held tester.

(2) Connect the OBD ll scan tool or TOYOTA hand–held tester to DLC3 under the instrument panel lower pad.

(3) Turn the ignition switch ON and turn the OBD ll scan tool or TOYOTA hand–held tester switch ON.

(4) Use the OBD ll scan tool or TOYOTA hand–held tester to check the DTCs and freeze frame data; note them down. (For operating instructions, see the OBD ll scan tool's instruction book.)

(5) See page DI–924 to confirm the details of the DTCs.

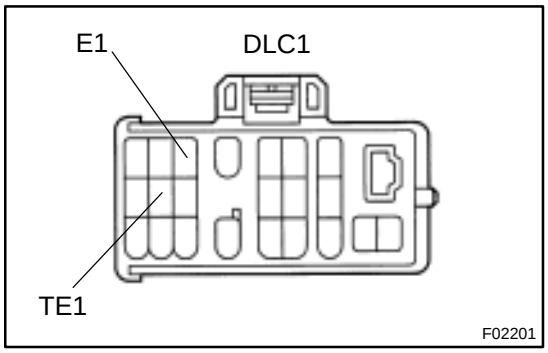

(b) Check the DTC (Using diagnosis check wire)

(1) Turn ignition switch ON.

(2) Using SST, connect between terminals 8 (TE1) and 3 (E1) of DLC1.
SST 09843–18040

(3) Read the diagnostic trouble code from malfunction indicator lamp.

HINT:

- If a diagnostic trouble code is not output, check the Tc terminal circuit .
- ECM controls the immobiliser function on this vehicle, DTC is out put with DTC of engine.

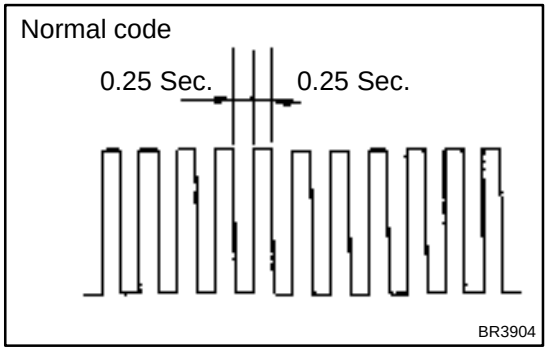

As an example, the blinking patterns for codes; normal, 12 and 99 are as shown in the illustration.

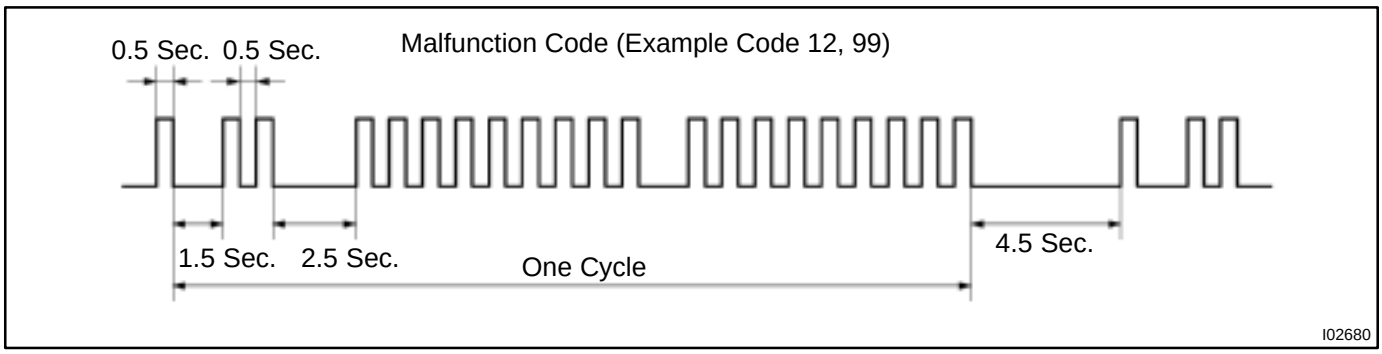

(4) When DTC ”99” is output, there is a trouble with immobiliser. Start troubleshooting referring to PROBLEM SYMPTOM TABLE.

(5) After completing the check, disconnect terminals 13 (TC) and 4 (CG) and turn OFF the display.

HINT:

In the event of 2 or more malfunction codes. indication will begin from the smaller numbered code and continue in order to the larger.

(c) Clear the DTC

The following procedures will erase the DTCs and freeze frame data.

(1) Operating the OBD ll scam tool (complying with SAEJ1978) or TOYOTA hand–held tester to erase the codes. (See the OBD ll scan tool’s instruction book for operating instructions.)

(2) Disconnecting the battery terminals or EFI fuse.

DI1KH–03

DIAGNOSTIC TROUBLE CODE CHART

DTC No. (See page)	Detection Item	Trouble Area
B2795 (DI–928)	Unmatched key code	●Key ●Unregistered key inserted before
B2796 (DI–929)	No communication in immobiliser system	●Key ●Transponder key coil ●Amplifier ●Wirehaness ●ECM
B2797 (DI–932)	Communication malfunction No.1	●Communication contests ●Unregistered key inserted before
B2798 (DI–935)	Communication malfunction No.2	●Key ●Transponder key coil ●Amplifier ●Wirehaness ●ECM

HINT:
To reduce the unnecessary exchange of ECM, check that a trouble occurs with the original ECM at the time of exchanging ECM and the trouble will disappear with a new ECM.

DI1KI–04

PARTS LOCATION

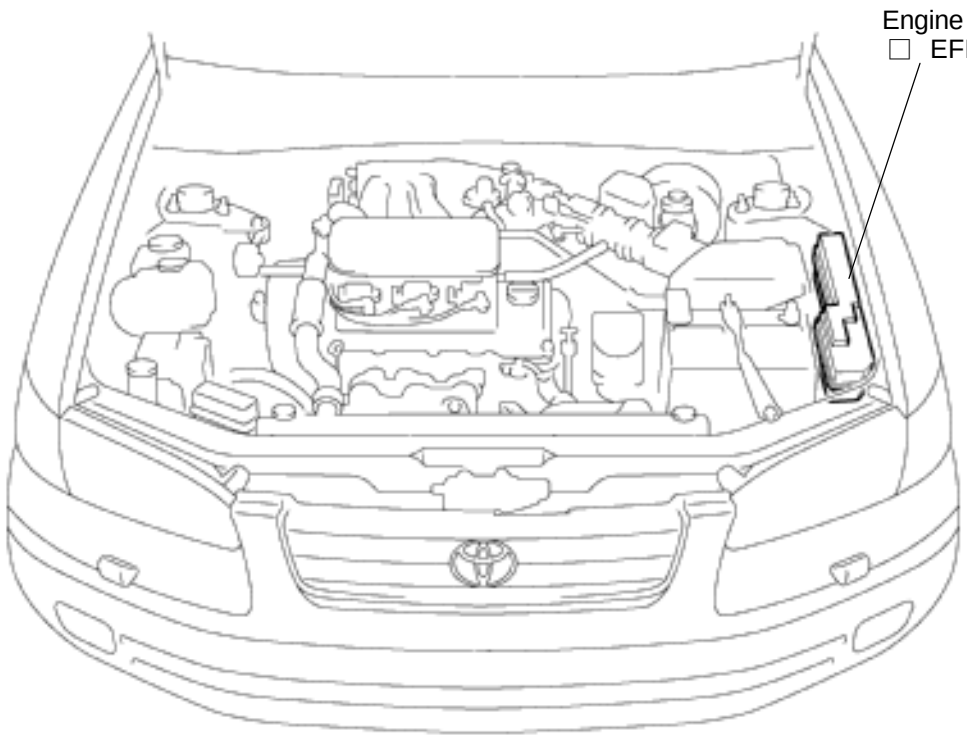

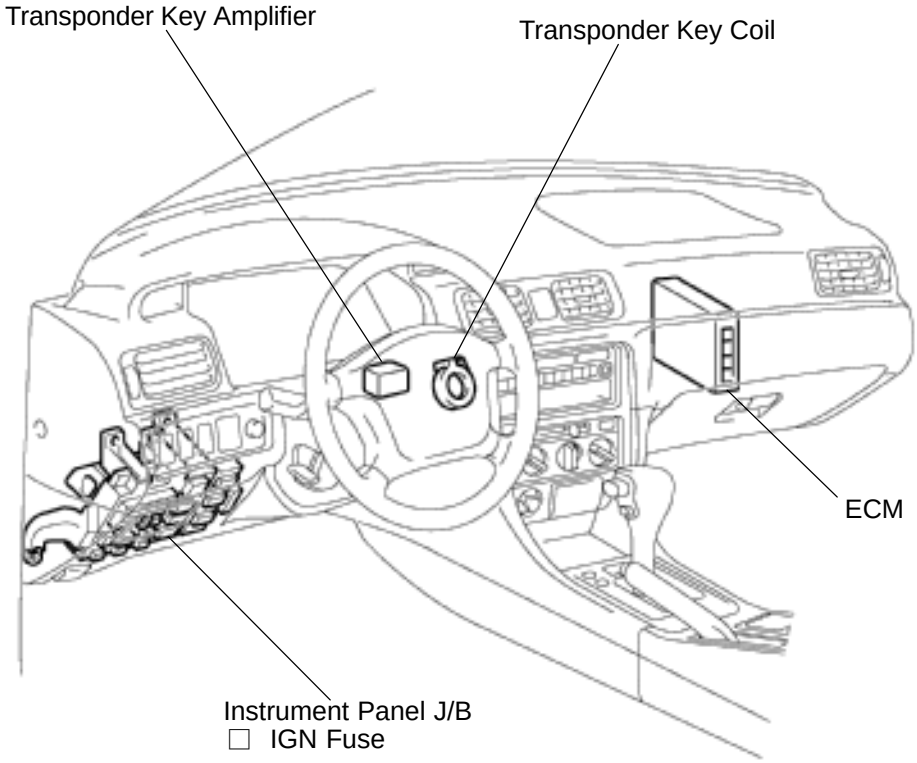

I02682

DI1KJ–04

TERMINALS OF ECM

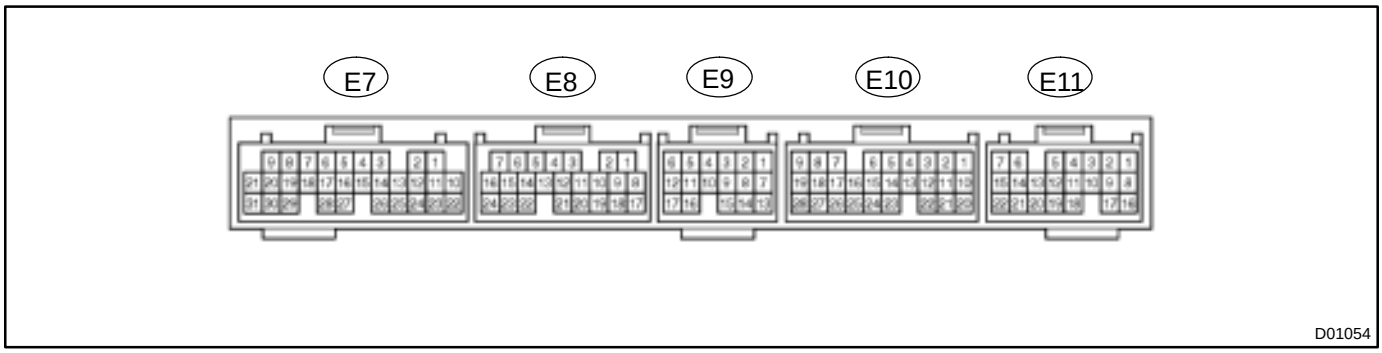

5S–FE engine:

Symbols (Terminals No.)	Wiring Color	Condition	STD Voltage (V)
CODE – E1 (E10–8 ↔ E9–24)	G–W ↔ BR	Ignition Switch ON	10 – 14
TXCK – E1 (E10–9 ↔ E9–24)	L–Y ↔ BR	Ignition Switch ON	10 – 14
RXCK – E1 (E10–3 ↔ E9–24)	R–L ↔ BR	Ignition Switch ON	10 – 14

1MZ–FE engine:

Symbols (Terminals No.)	Wiring Color	Condition	STD Voltage (V)
CODE – E1 (E9–4 ↔ E10–17)	G–W ↔ BR	Ignition Switch ON	10 – 14
TXCK – E1 (E9–10 ↔ E10–17)	L–Y ↔ BR	Ignition Switch ON	10 – 14
RXCK – E1 (E9–5 ↔ E10–17)	R–L ↔ BR	Ignition Switch ON	10 – 14

DI1KK–03

PROBLEM SYMPTOMS TABLE

Symptom	Suspect Area	See page
Immobiliser is not set. (Engine starts with key codes other than the registered key code.)	2. ECM	IN–31
Engine does not start.	1. Key 2. Wire harness 3. Transponder key coil 4. Amplifier 5. ECM	*1 IN–31 BE–128 IN–31
Security indicator is always ON.	1. Security indicator 2. Wire harness 3. ECM	*2 IN–31 IN–31
Security indicator is always ON. (Although code has been registered in the automatic registration mode, indicator is not OFF.)	1. Wire harness 2. Transponder key coil 3. Amplifier 4. ECM	IN–31 BE–128 IN–31
Security indicator is OFF (When DTC of immobiliser is output)	1. Wire harness 2. Transponder key coil 3. Amplifier 4. ECM	IN–31 BE–128 IN–31
Security indicator is OFF. (When DTC of immobiliser is not output)	1. Wire harness 2. ECM	IN–31 IN–31
Security indicator is abnormally brinking.	1. Wire harness 2. ECM	IN–31 IN–31

*1 : Check that the key which did not start the engine has been registered and that it is possible to start with other already registered key codes.

*2 : Finish the automatic registration mode because the mode might still remain.

DI1KN–02

CIRCUIT INSPECTION

DTC	B2795/99	Unmatched Key Code

This DTC is output when an unregistered key is inserted. When this DTC is output, delete DTC and insert the key that a customer keeps to check that B2795 is output.
When a key that outputs B2795 is found, register this key. When B2795 is not output, there is a possibility that the unregistered key has been inserted before. (ECM is normal.)
Inquire of a customer about the condition of using the system to find the cause of the trouble.
(Example: Another key has been inserted, etc.)

DI4FF–01

DTC	B2796/99	No Communication in Immobiliser system

CIRCUIT DESCRIPTION

DTC No.	DTC Detecting Condition	Trouble Area
B2796/99	No communication	●Key ●Transponder Key Coil ●Transponder Key Amplifier ●Wireharness ●ECM

WIRING DIAGRAM

5S–FE engine:

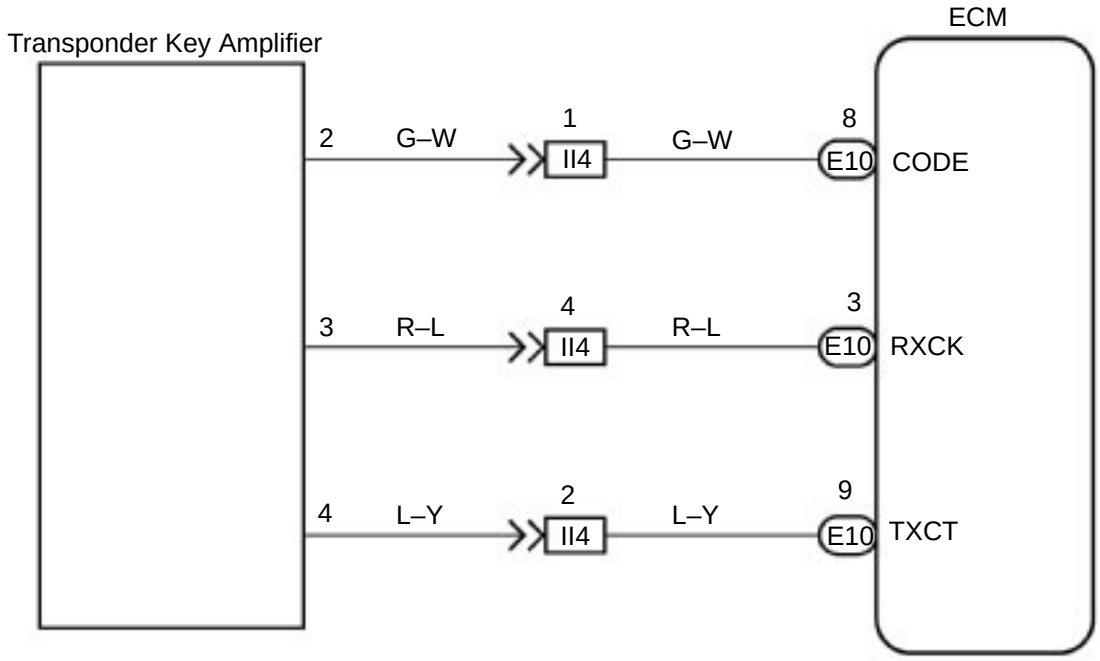

1MZ–FE engine:

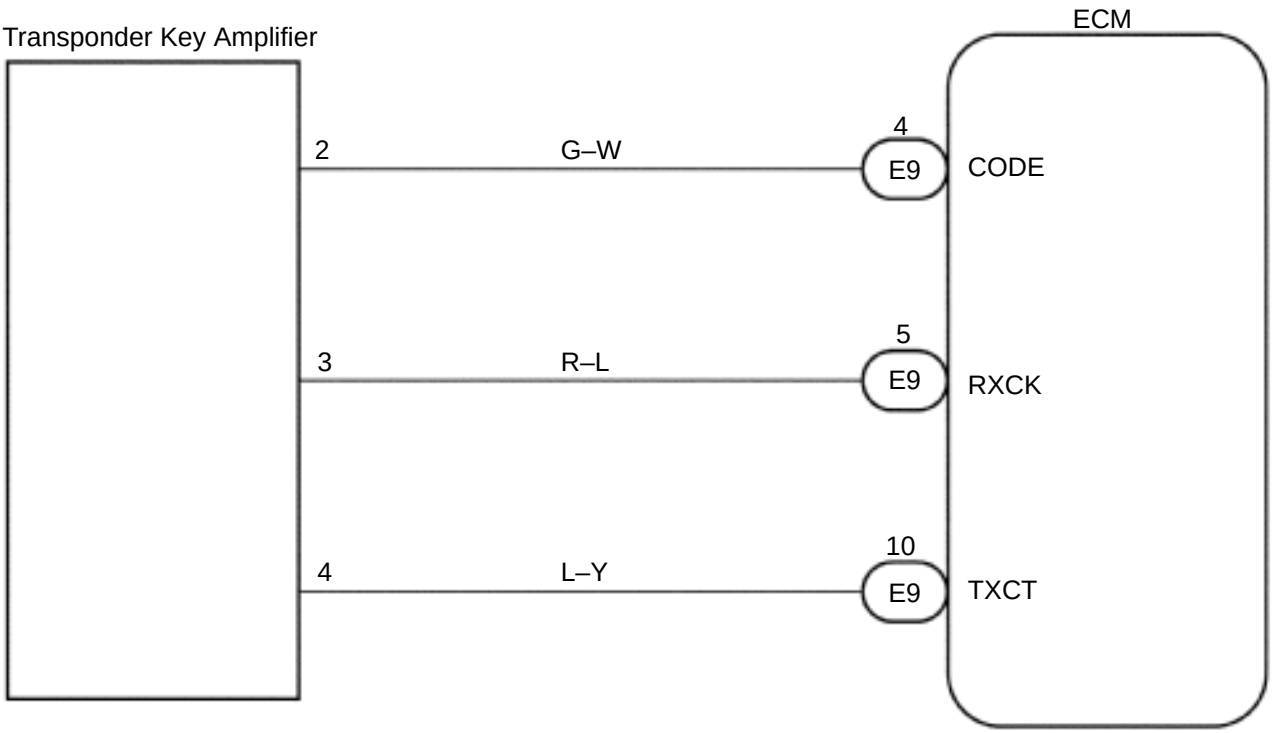

INSPECTION PROCEDURE

1	Check transponder key coil (See page BE–128).

NG → Replace transponder key coil.

OK ↓

2	Check harness and connector between transponder key amplifier and ECM.

NG → Repair or replace harness and connector.

OK ↓

3	Does it operate normally after replacement of transponder key amplifier?

Yes → Replace transponder key amplifier.

No ↓

Replace ECM.

DI4FG–01

DTC	B2797/99	Communication Malfunction No.1

CIRCUIT DESCRIPTION

This code is detected when although the communication has been performed normally, an error occurs. (Example. Some noise is inclueded in communication line.)

DTC No.	DTC Detecting Condition	Trouble Area
B2797/99	Communication error	●Wire Harness ●Transponder Key Amplifier ●ECM

WIRING DIAGRAM

5S–FE engine:

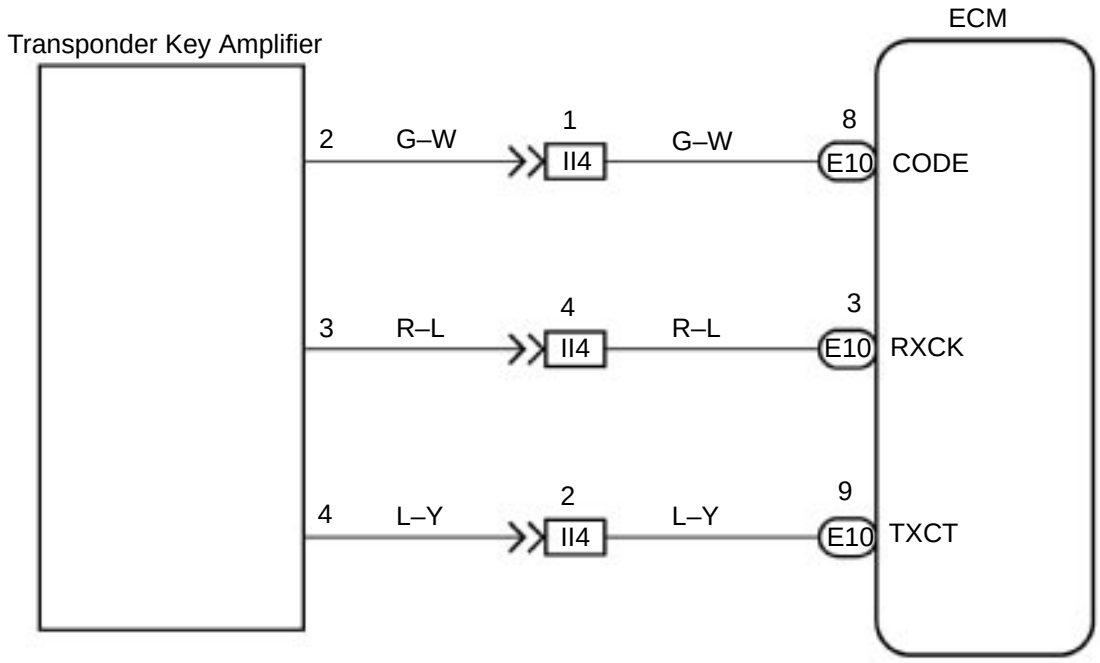

N

I08435

1MZ–FE engine:

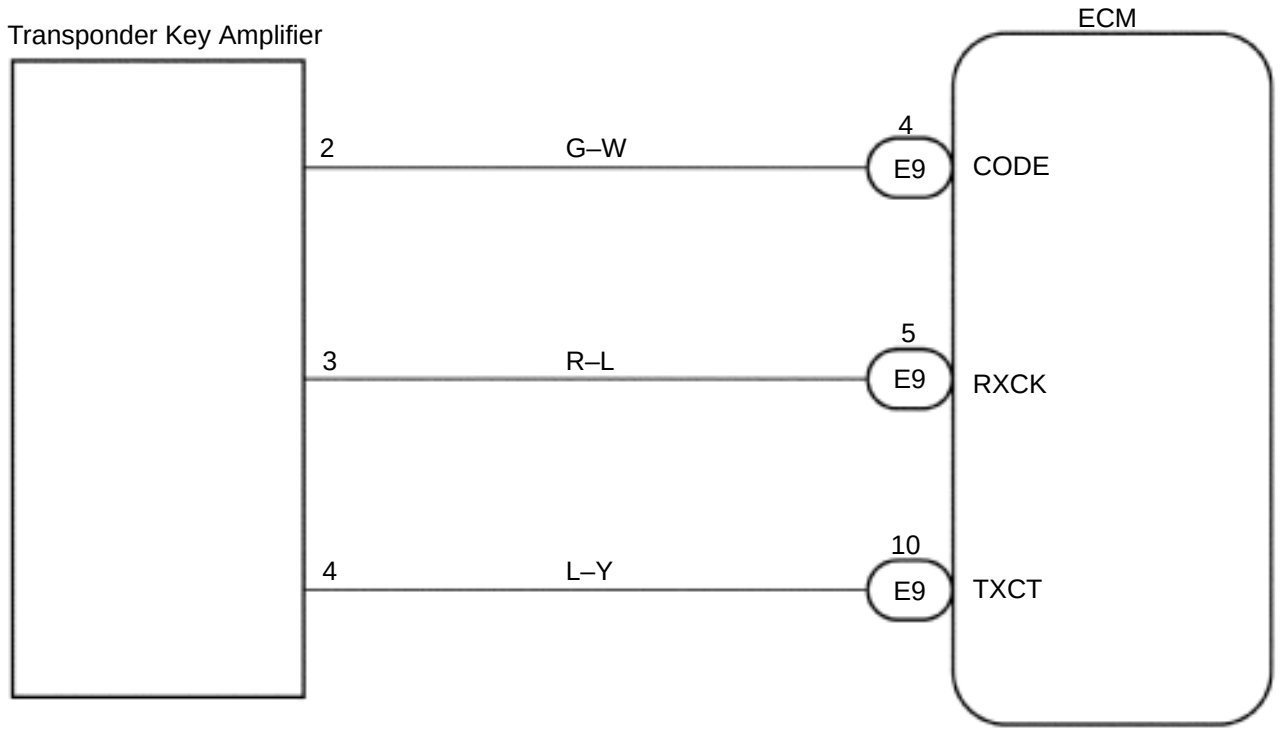

INSPECTION PROCEDURE

1	Noise check

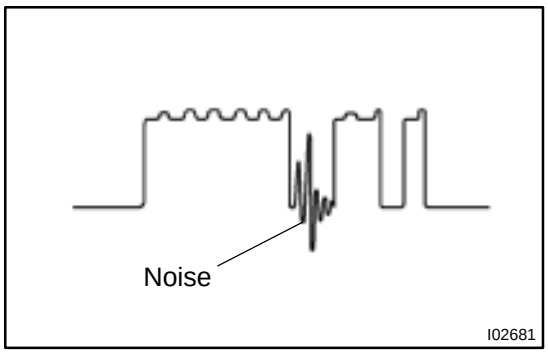

PREPARATION:
Insert already registered master key in the key cylinder.
CHECK:
Using an oscilloscope or TOYOTA hand–held tester, check that noise is included in the CODE terminal of ECM.
OK:
No noise is detected.

NG → **Try to find the cause of the noise and remove it.**

OK

2	Does it operate normally after replacement of transponder key amplifier?

Yes → **Replace transponder key amplifier.**

No

Replace ECM.

DI4FH–01

DTC	B2798/99	Communication malfunction No.2

CIRCUIT DESCRIPTION

DTC No.	DTC Detecting Condition	Trouble Area
B2798/99	Communication error	●Key ●Transponder Key Coil ●Transponder Key Amplifier ●Wireharness ●ECM

WIRING DIAGRAM

5S–FE engine:

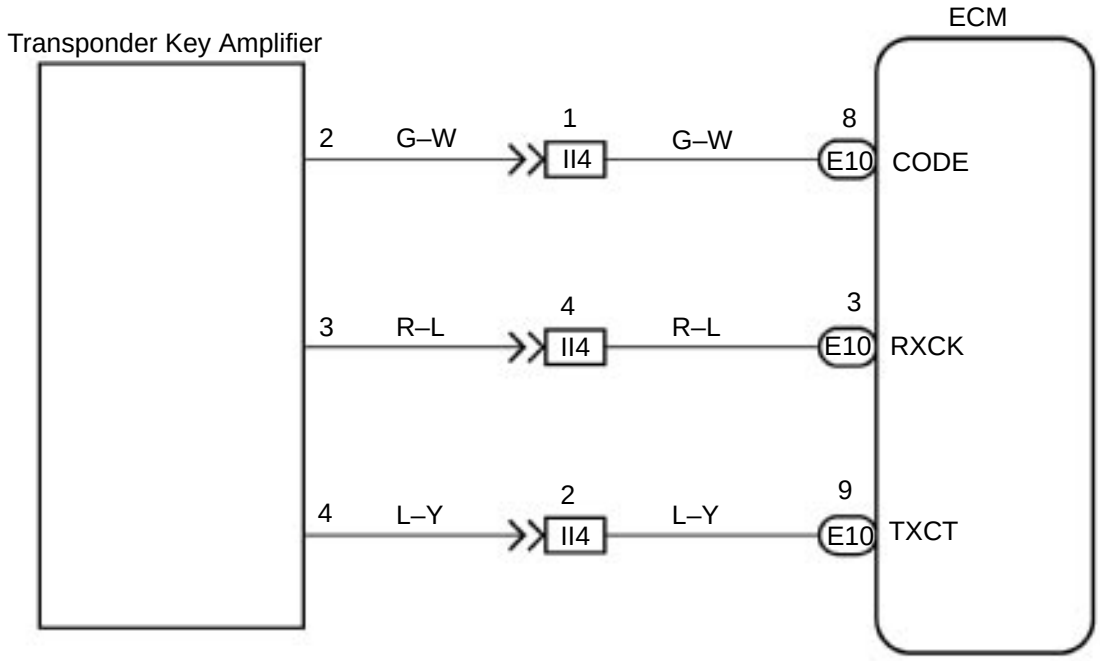

1MZ–FE engine:

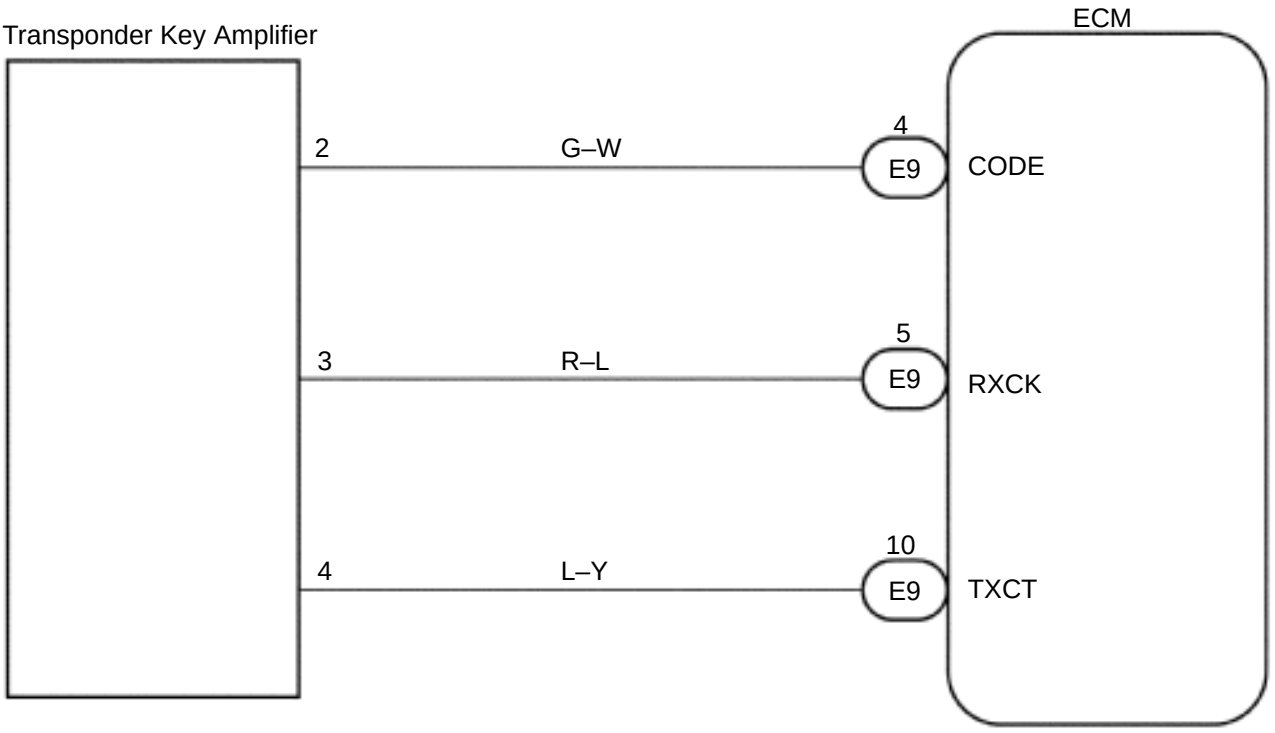

INSPECTION PROCEDURE

1	Check transponder key coil (See page BE–128).

NG → Replace transponder key coil

OK →

2	Check harness and connector between transponder key amplifier and ECM.

NG → Repair or replace harness and connector

OK →

3	Does it operate normally after replacement of transponder key amplifier?

Yes → Replace transponder key amplifier.

No →

Replace ECM.

EMISSION CONTROL SYSTEM

EC039–05

PURPOSE

The emission control systems are installed to reduce the amount of HC, CO and NOx exhausted from the engine ((3), (4) and (5)), to prevent the atmospheric release of blow–by gas–containing HC (1) and evaporated fuel containing HC being released from the fuel tank (2).
The function of each system is shown in the following table.

System	Abbreviation	Function
(1) Positive Crankcase Ventilation	PCV	Reduces HC
(2) Evaporative Emission Control	EVAP	Reduces evaporated HC
(3) Exhaust Gas Recirculation	EGR	Reduces NOx
(4) Three–Way Catalytic Converter	TWC	Reduces HC, CO and NOx
(5) Sequential Multiport Fuel Injection*	SFI	Injects a precisely timed, optimum amount of fuel for reduced exhaust emissions

Remark: * For inspection and repair of the SFI system, refer to the SFI section in this manual.

PARTS LAYOUT AND SCHEMATIC DRAWING

EC03A–03

LOCATION

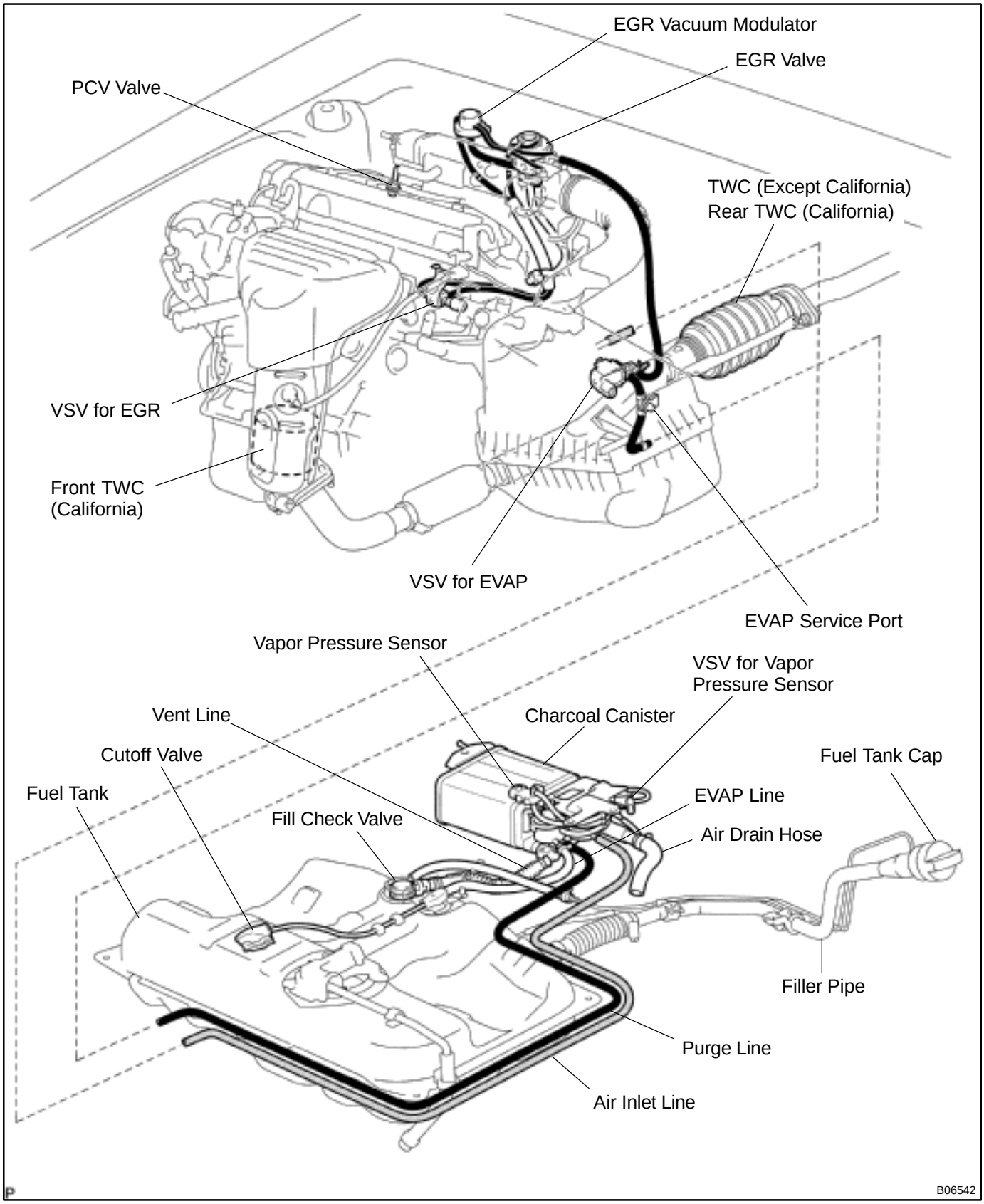

EC03B–03

DRAWING

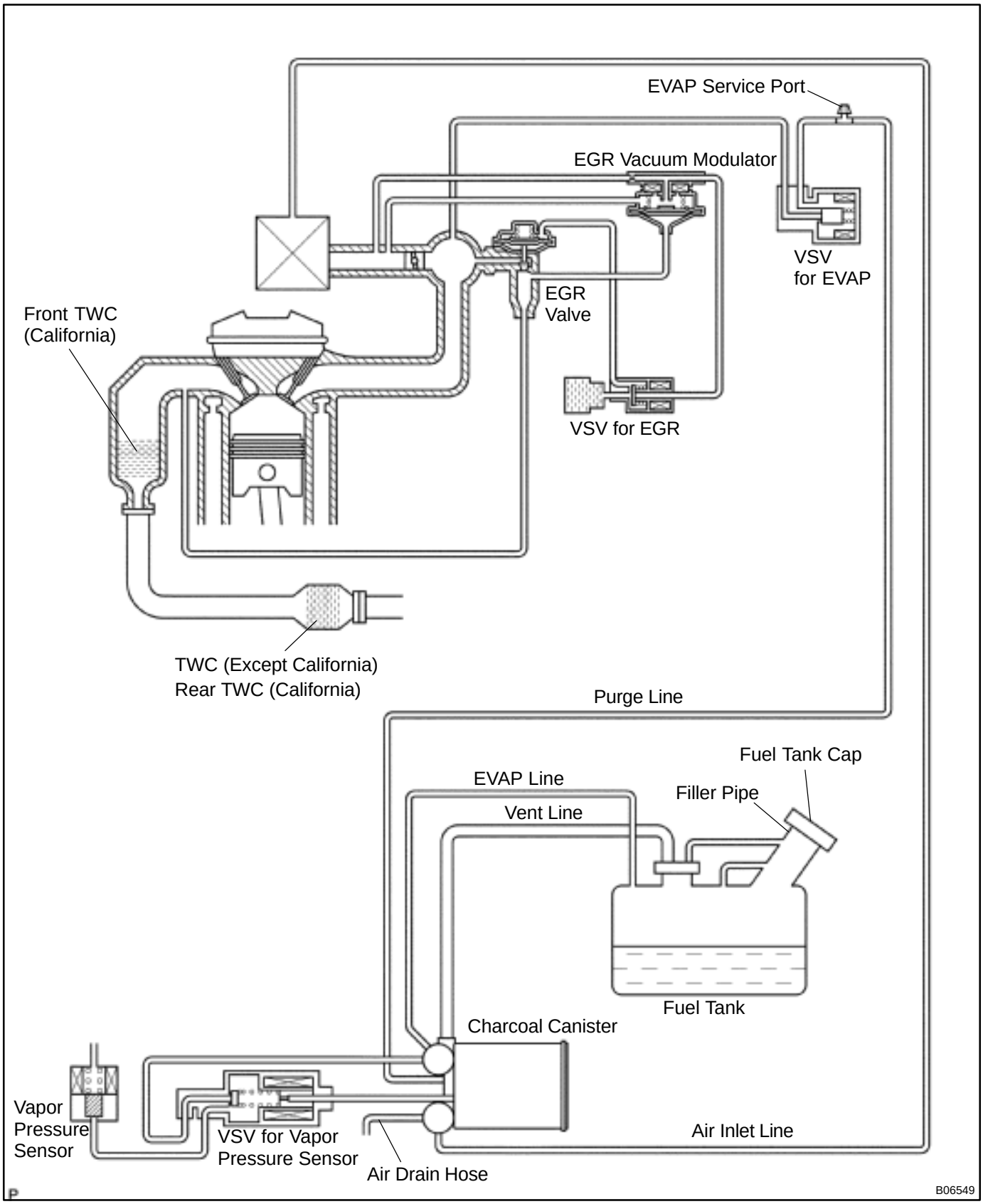

POSITIVE CRANKCASE VENTILATION (PCV) SYSTEM

EC03C–05

INSPECTION

1. INSPECT PCV VALVE

(a) Remove the PCV valve.

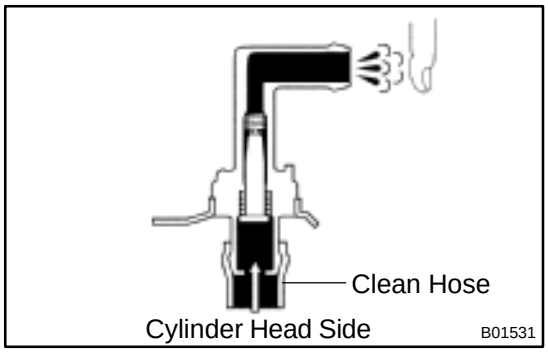

(b) Install a clean hose to the PCV valve.

(c) Inspect the PCV valve operation.

(1) Blow air into the cylinder head side, and check that air passes through easily.

CAUTION:
Do not suck air through the valve. Petroleum substances inside the valve are harmful.

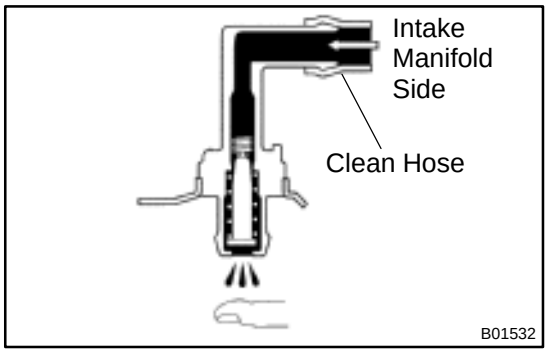

(2) Blow air into the intake manifold side, and check that air passes through with difficulty.

If operation is not as specified, replace the PCV valve.

(d) Remove the clean hose from the PCV valve.

(e) Reinstall the PCV valve.

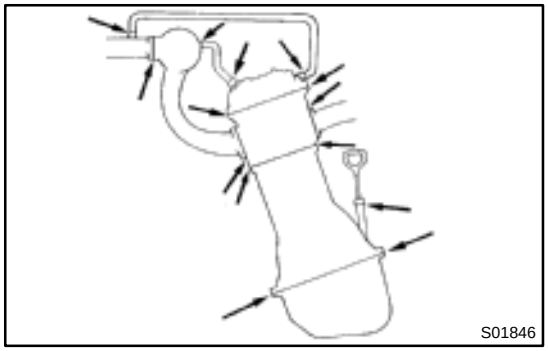

2. INSPECT HOSES, CONNECTIONS AND GASKETS

Visually check for cracks, leaks or damage.

EVAPORATIVE EMISSION (EVAP) CONTROL SYSTEM

EC03D–05

COMPONENTS

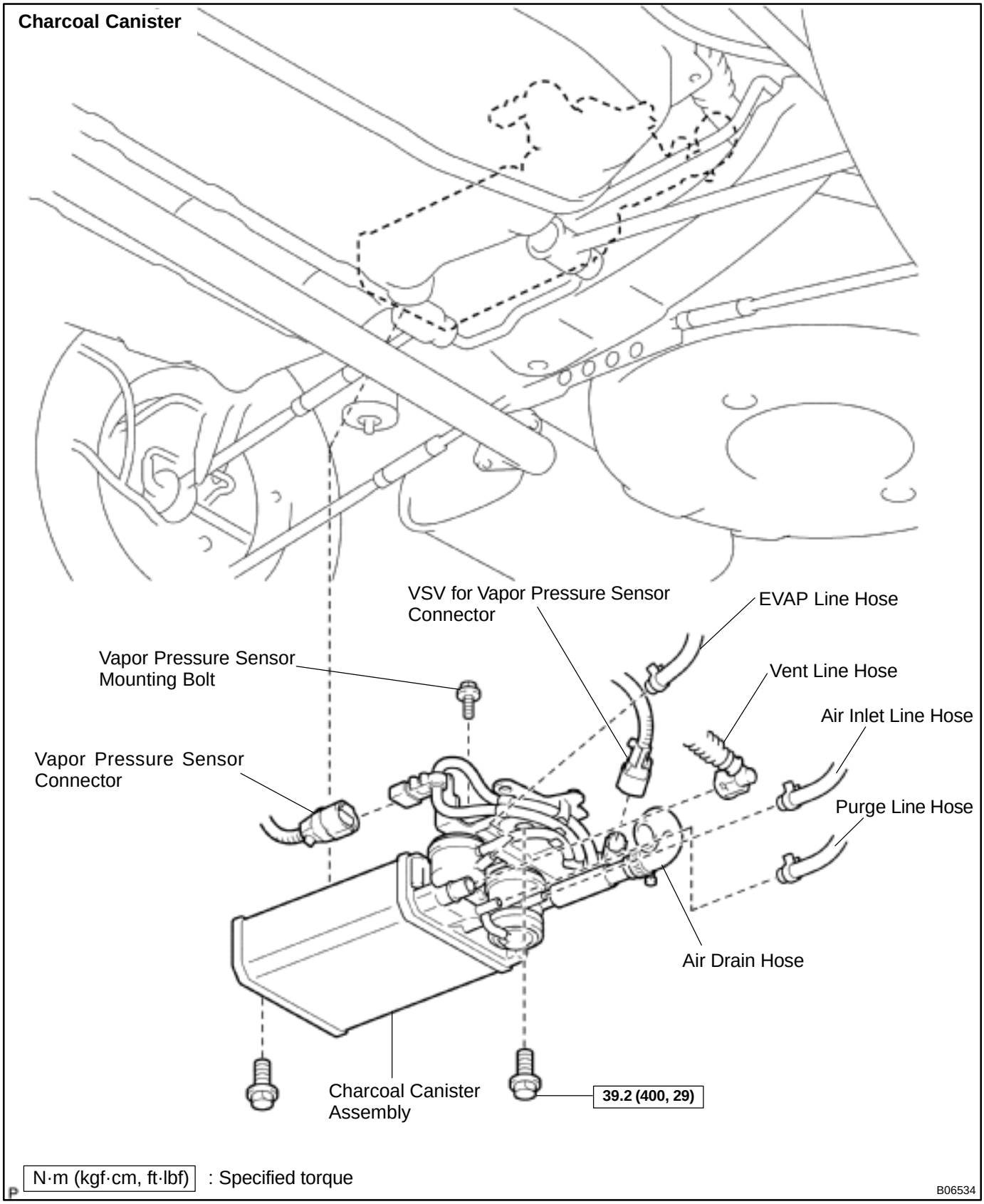

EC03E–05

INSPECTION

1. INSPECT LINES AND CONNECTORS

Visually check for loose connections, sharp bends or damage.

2. INSPECT FUEL TANK FILLER PIPE

Visually check for deformation, cracks or fuel leakage.

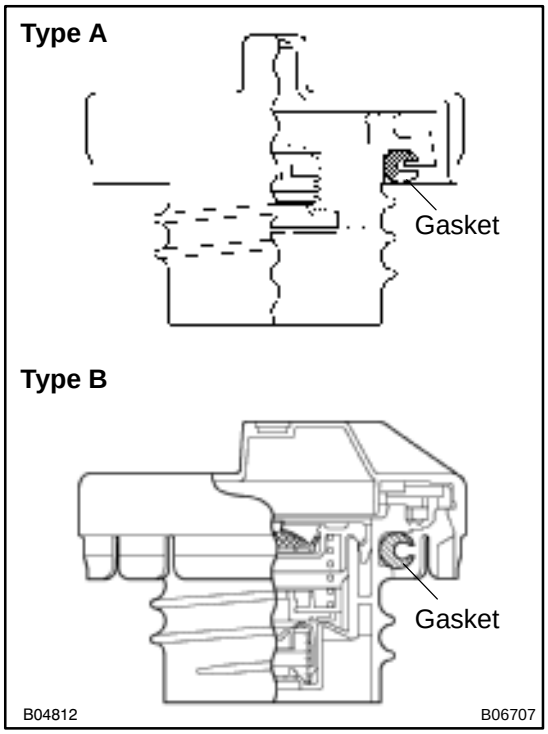

3. INSPECT FUEL TANK CAP

Visually check if the cap and/or gasket are deformed or damaged.

If necessary, repair or replace the cap.

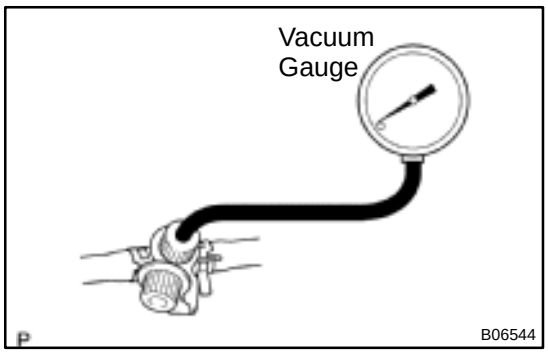

4. INSPECT EVAP SYSTEM LINE

(a) Warm up the engine and stop the engine.
Allow the engine to warm up to normal operating temperature.

(b) Install a vacuum gauge (EVAP control system test equipment vacuum gauge) to the EVAP service port on the purge line.

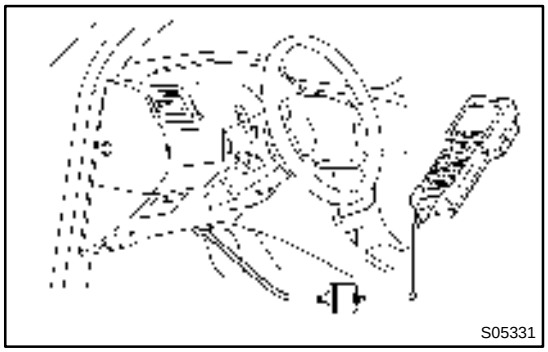

(c) TOYOTA Hand–Held Tester:
Forced driving of the VSV for the EVAP.
(1) Connect a TOYOTA hand–held tester to the DLC3.
(2) Start the engine.
(3) Push the TOYOTA hand–held tester main switch ON.
(4) Use the ACTIVE TEST mode on the TOYOTA hand–held tester to operate the VSV for the EVAP.

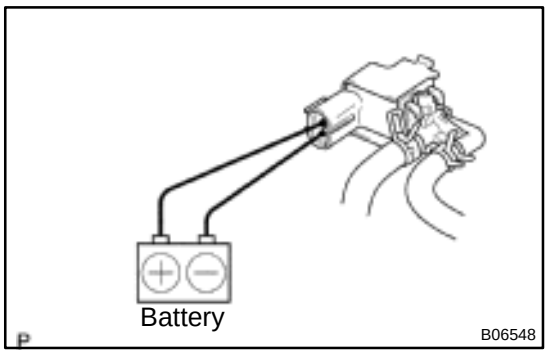

(d) If you have no TOYOTA Hand–Held Tester:
Forced driving of the VSV for the EVAP.
(1) Disconnect the VSV connector for the EVAP.
(2) Connect the positive (+) and negative (–) leads from the battery to the VSV terminals for the EVAP.
(3) Start the engine.

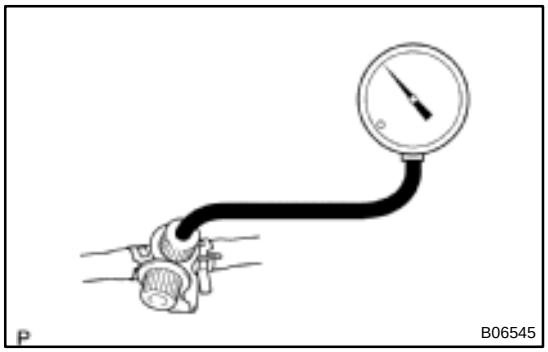

(e) Check the vacuum at idle.
Vacuum:
Maintain at 0.368 – 19.713 in.Hg (5 – 268 in.Aq) for over 5 seconds

HINT:
If the vacuum does not change, you can conclude that the hose connecting the VSV to the service port has come loose or is blocked, or the VSV is malfunctioning.

(f) TOYOTA Hand–Held Tester:
Conclude forced driving of the VSV for the EVAP.
(1) Stop the engine.
(2) Disconnect the TOYOTA hand–held tester from the DLC3.

(g) If you have no TOYOTA Hand–Held Tester:
Conclude forced driving of the VSV for the EVAP.
(1) Stop the engine.
(2) Disconnect the positive (+) and negative (–) leads from the battery from the VSV terminals for the EVAP.
(3) Connect the VSV connector for the EVAP.

(h) Disconnect the vacuum gauge from the EVAP service port on the purge line.

(i) Connect a pressure gauge to the EVAP service port on the purge line.

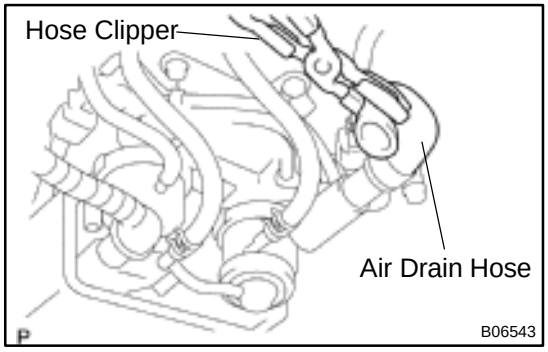

(j) Check the pressure.
(1) Close off the air drain hose at the marked position of the canister with a hose clipper or similar instrument.

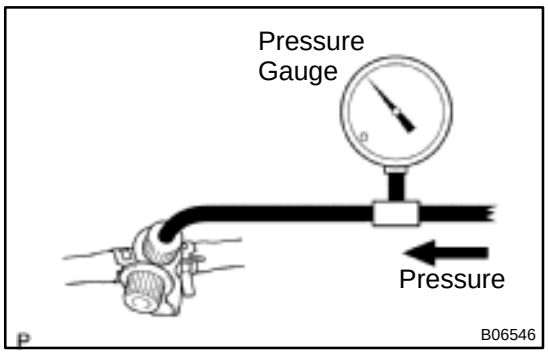

(2) Add the pressure (13.5 – 15.5 in.Aq) from the EVAP service port.

Pressure:

2 minutes after the pressure is added, the gauge should be over 7.7 – 8.8 in.Aq.

HINT:

If you can't add pressure, you can conclude that the hose connecting the VSV ~ canister ~ fuel tank has slipped off or the VSV is open.

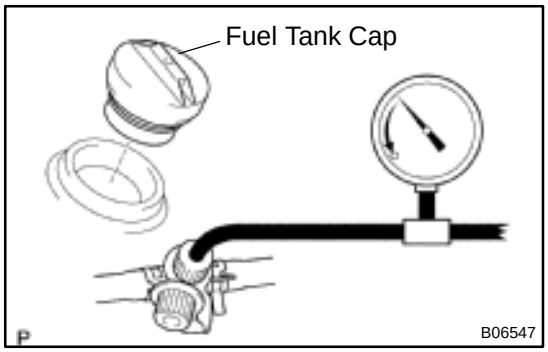

(3) Check if the pressure decreases when the fuel tank cap is removed while adding pressure.

HINT:

If the pressure does not decrease when the filler cap is removed, then you can conclude that the hose connecting the service port to the fuel tank is blocked, etc.

(k) Disconnect the pressure gauge from the EVAP service port on the purge line.

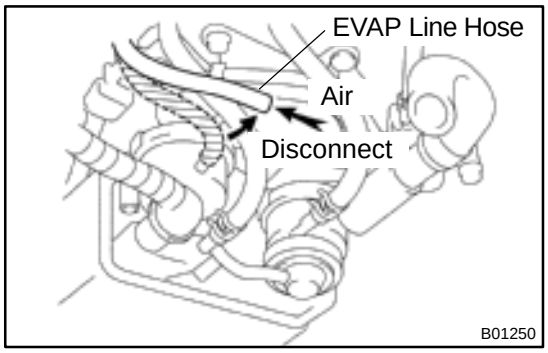

5. CHECK AIRTIGHTNESS IN FUEL TANK AND FILLER PIPE

(a) Disconnect the EVAP line hose from the charcoal canister side and then pressurize and make the internal pressure in the fuel tank 4 kPa (41 gf/cm^2, 0.58 psi).

(b) Check that the internal pressure of the fuel tank can be hold for 1 minute.

(c) Check the connected portions of each hose and pipe.

(d) Check the installed parts on the fuel tank.

If there is no abnormality, replace the fuel tank and filler pipe.

(e) Reconnect the EVAP line hose to the charcoal canister.

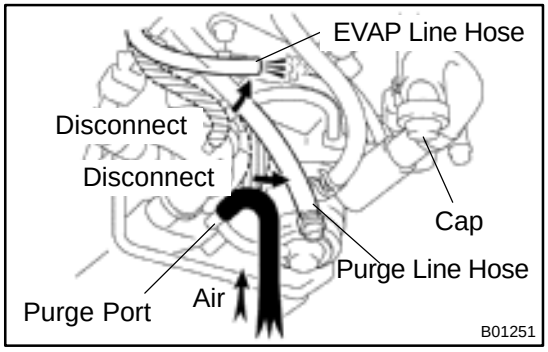

6. INSPECT FUEL CUTOFF VALVE AND FILL CHECK VALVE

(a) Disconnect the purge line hose and EVAP line hose from the charcoal canister.

(b) Plug the cap to the air drain hose.

(c) Pressurize 4 kPa (41 gf/cm^2, 0.58 psi) to the purge port and check that there is ventilation through the EVAP line hose.

HINT:
In the condition that the fuel fuel is full, as the float value of the fill check valve is closed and has no ventilation, it is necessary to check the fuel amount (volume).

(d) Check if there is any struck in the vent line hose and EVAP line hose.

If there is no stuck in hoses, replace the fuel cutoff valve and fill check valve.

(e) Reconnect the purge line hose and EVAP line hose to the charcoal canister.

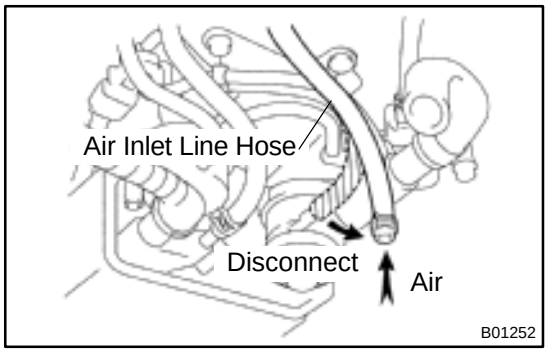

7. CHECK AIR INLET LINE

(a) Disconnect the air inlet line hose from the charcoal canister.

(b) Check that there is ventilation in the air inlet line.

(c) Reconnect the air inlet line hose to the charcoal canister.

8. REMOVE CHARCOAL CANISTER ASSEMBLY

(a) Disconnect the VSV connector.

(b) Disconnect the vapor pressure sensor connector.

(c) Disconnect the purge line hose, EVAP line hose and air inlet line hose from the charcoal canister.

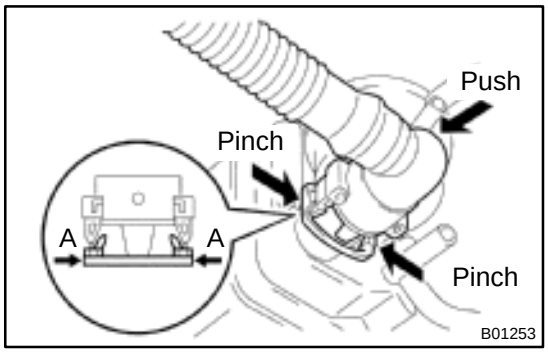

(d) Disconnect the vent line hose from the charcoal canister.
   (1) Push the connector deep inside.
   (2) Pinch portion A.
   (3) Pull out the connector.

(e) Remove the 2 charcoal canister mounting bolts.

(f) Remove the vapor pressure sensor mounting bolt.

(g) Remove the charcoal canister assembly.

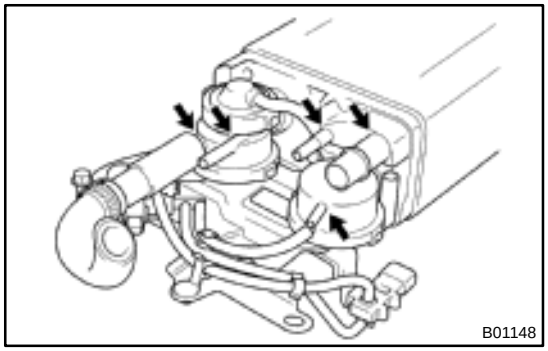

9. INSPECT CHARCOAL CANISTER

(a) Visually check the charcoal canister for cracks or damage.

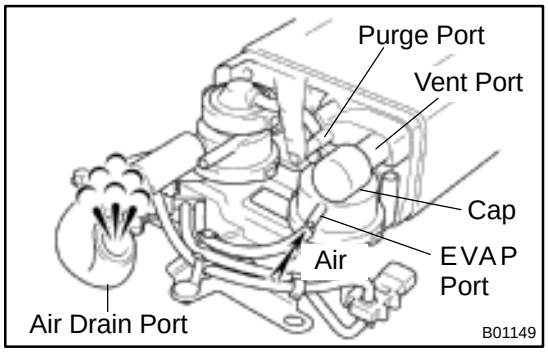

(b) Inspect the charcoal canister operation.
   (1) Plug the vent port with a cap.
   (2) While holding the purge port closed, blow air (1.76 kPa, 18 gf/cm^2, 0.26 psi) into the EVAP port and check that air flows from the air drain port.

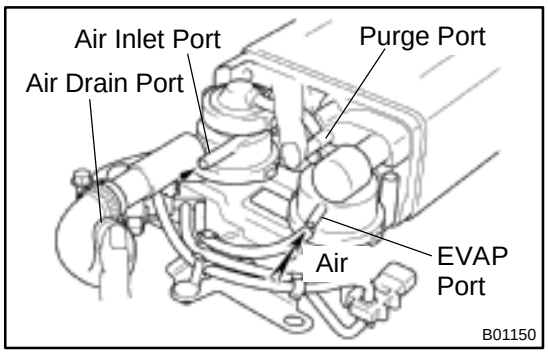

(3) While holding the purge port and the air drain port closed, blow air (1.76 kPa, 18 gf/cm^2, 0.26 psi) into the EVAP port and check that air does not flow from the air inlet port.

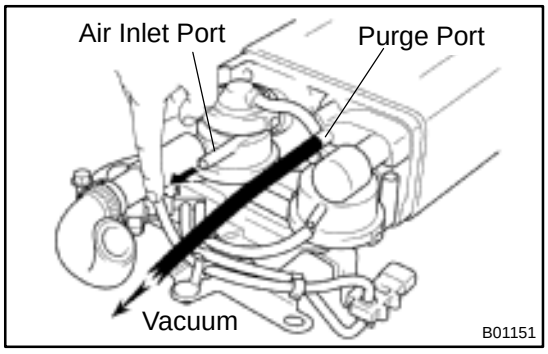

(4) Apply vacuum (3.43 kPa, 25.7 mmHg, 1.01 in.Hg) to the purge port, check that the vacuum does not decrease when the air inlet port is closed, and check that the vacuum decreases when the air inlet port is released.

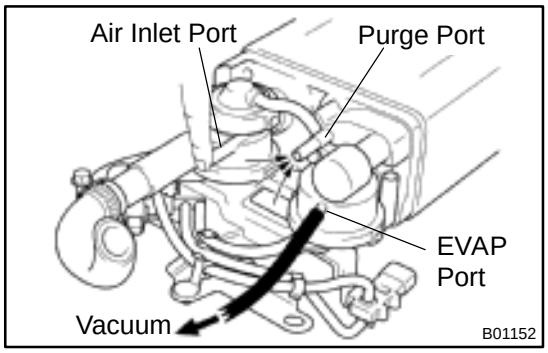

(5) While holding the air inlet port closed, apply vacuum (3.43 kPa, 25.7 mmHg, 1.01 in.Hg) to the EVAP port and check that air flows into the purge port.

If operation is not as specified, replace the charcoal canister.

(6) Remove the cap from the vent port.

10. INSPECT VSV FOR EVAP (See page SF–45)

11. INSPECT VSV FOR VAPOR PRESSURE SENSOR (See page SF–47)

12. INSPECT VAPOR PRESSURE SENSOR (See page SF–55)

13. REINSTALL CHARCOAL CANISTER ASSEMBLY

EXHAUST GAS RECIRCULATION (EGR) SYSTEM

COMPONENTS

EC03F–03

EGR Valve

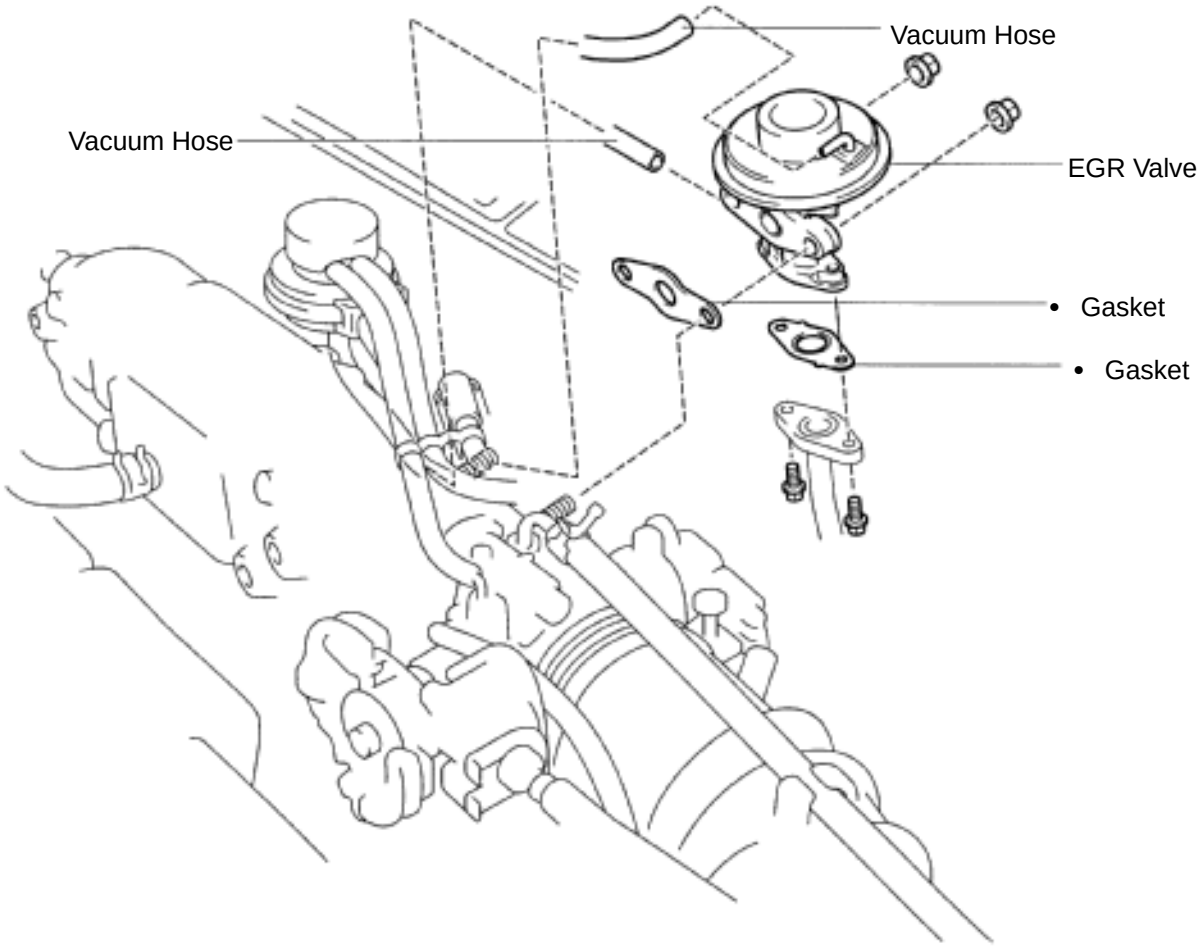

• Non–reusable part

S05556

EC03G–04

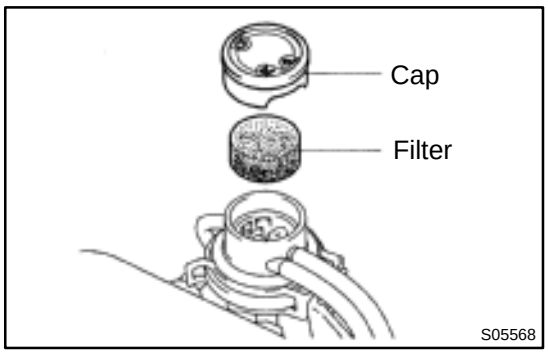

INSPECTION

1. INSPECT EGR SYSTEM

(a) Inspect and clean the filter in the EGR vacuum modulator.
  (1) Remove the cap and filter.
  (2) Check the filter for contamination or damage.
  (3) Using compressed air, clean the filter.
  (4) Reinstall the filter and cap.

HINT:
Install the filter with the coarser surface facing the atmospheric side (outward).

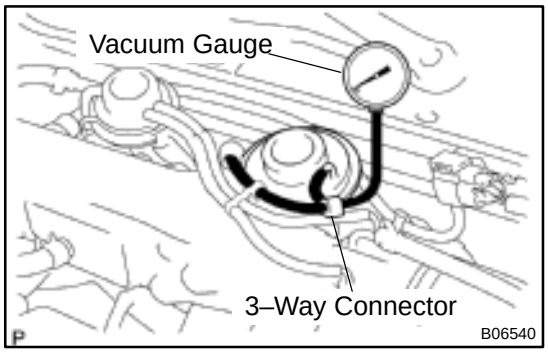

(b) Using a 3–way connector, connect a vacuum gauge to the hose between the EGR valve and VSV.

(c) Inspect seating of the EGR valve.
Start the engine and check that the engine starts and runs at idle.

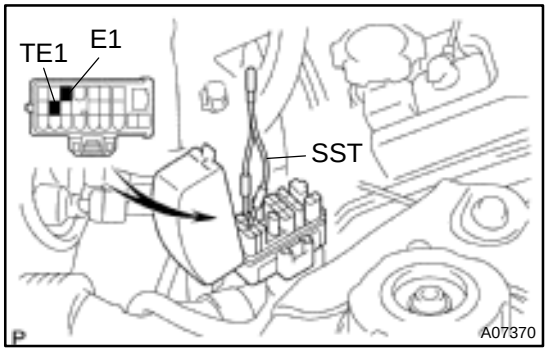

(d) Using SST, connect terminals TE1 and E1 of the DLC1.
SST 09843–18020

(e) Inspect the VSV operation with the cold engine.
  (1) The engine coolant temperature should be below 55˚C (131˚F).
  (2) Check that the vacuum gauge indicates zero at 2,500 rpm.

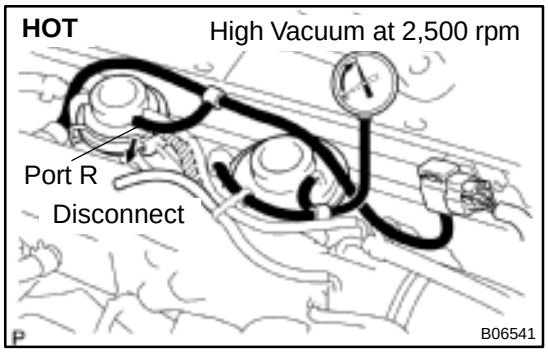

(f) Inspect the operation of the VSV and EGR vacuum modulator with the hot engine.
  (1) Warm up the engine to above 60˚C (140˚F).
  (2) Check that the vacuum gauge indicates low vacuum at 2,500 rpm.
  (3) Disconnect the vacuum hose port R of the EGR vacuum modulator and connect port R directly to the intake manifold with another hose.
  (4) Check that the vacuum gauge indicates high vacuum at 2,500 rpm.

HINT:
As a large amount of exhaust gas enters, the engine will misfire slightly.

(g) Remove the vacuum gauge, and reconnect the vacuum hoses to the proper locations.

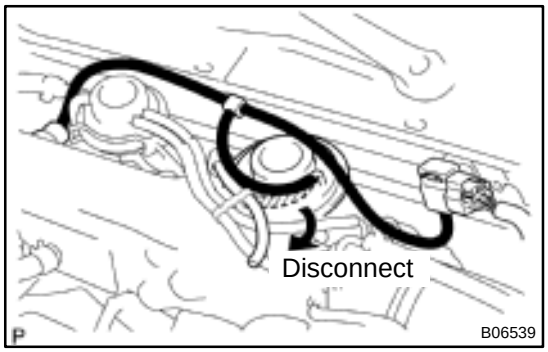

(h) Inspect the EGR valve.
  (1) Apply vacuum directly to the EGR valve with the engine idling.
  (2) Check that the engine runs rough or dies.
  (3) Reconnect the vacuum hoses to the proper locations.

HINT:
As exhaust gas is increasingly recirculated, the engine will start to misfire.

(i) Remove the SST from the DLC1.
  SST 09843–18020

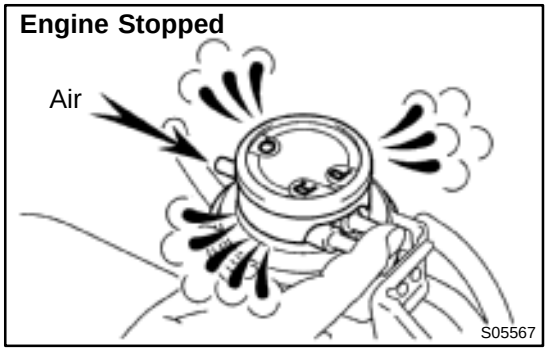

2. INSPECT EGR VACUUM MODULATOR

(a) Disconnect the vacuum hoses from ports P, Q and R of the EGR vacuum modulator.
(b) Block ports P and R with your finger.
(c) Blow air into port Q, and check that the air passes through to the air filter side freely.

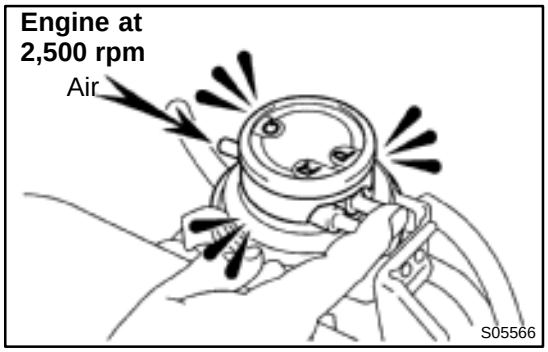

(d) Start the engine, and maintain speed at 2,500 rpm.
(e) Repeat the above test. Check that there is a strong resistance to air flow.
(f) Reconnect the vacuum hoses to the proper locations.

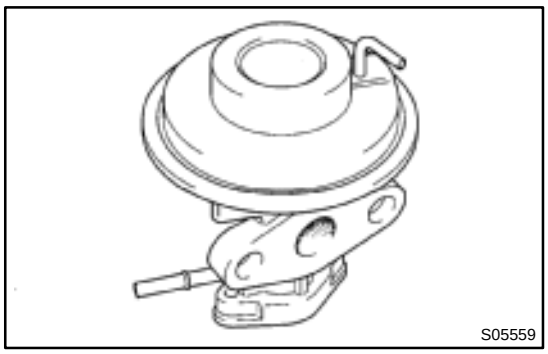

3. INSPECT EGR VALVE

(a) Remove the EGR valve.
  (1) Disconnect the 2 vacuum hoses from the EGR valve.
  (2) Remove the 2 bolts, 2 nuts, EGR valve and 2 gaskets.

(b) Check the EGR valve for sticking and heavy carbon deposits.

If a problem is found, replace the valve.

(c) Reinstall the EGR valve.
  (1) Temporarily 2 new gasket and the EGR valve with the 2 nuts and 2 bolts.
  (2) Tighten the nuts.

Torque: 13.3 N·m (136 kgf·cm, 10 ft·lbf)

  (3) Tighten the bolts.

Torque: 10 N·m (102 kgf·cm, 7 ft·lbf)

  (4) Connect the 2 vacuum hoses to the EGR valve.

4. INSPECT VSV FOR EGR (See page SF–43)

THREE–WAY CATALYTIC CONVERTER (TWC) SYSTEM

EC03H–03

ON–VEHICLE INSPECTION

1. INSPECT EXHAUST PIPE ASSEMBLY

(a) Check the connections for looseness or damage.

(b) Check the clamps for weakness, cracks or damage.

2. INSPECT REAR TWC

Check for dents or damage.

If any part of the protector is damaged or dented to the extent that it contacts the TWC, repair or replace it.

3. INSPECT REAR TWC HEAT INSULATOR

(a) Check the heat insulator for damage.

(b) Check for adequate clearance between the catalytic converter and heat insulator.

EC03I–04

COMPONENTS

Front TWC (California)

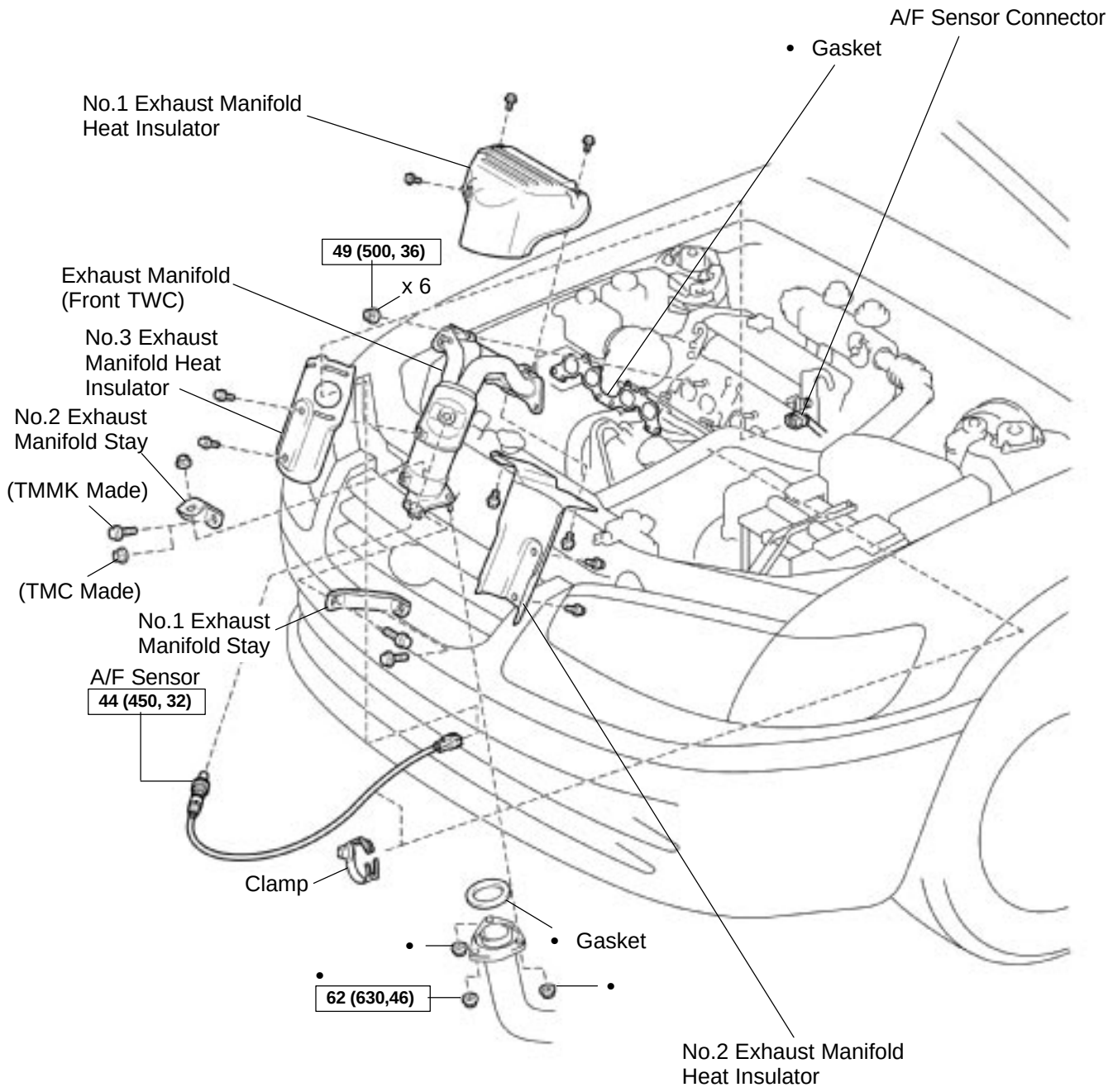

N·m (kgf·cm, ft·lbf) : Specified torque

• Non–reusable part

B06537

TWC (Except California)
Rear TWC (California)

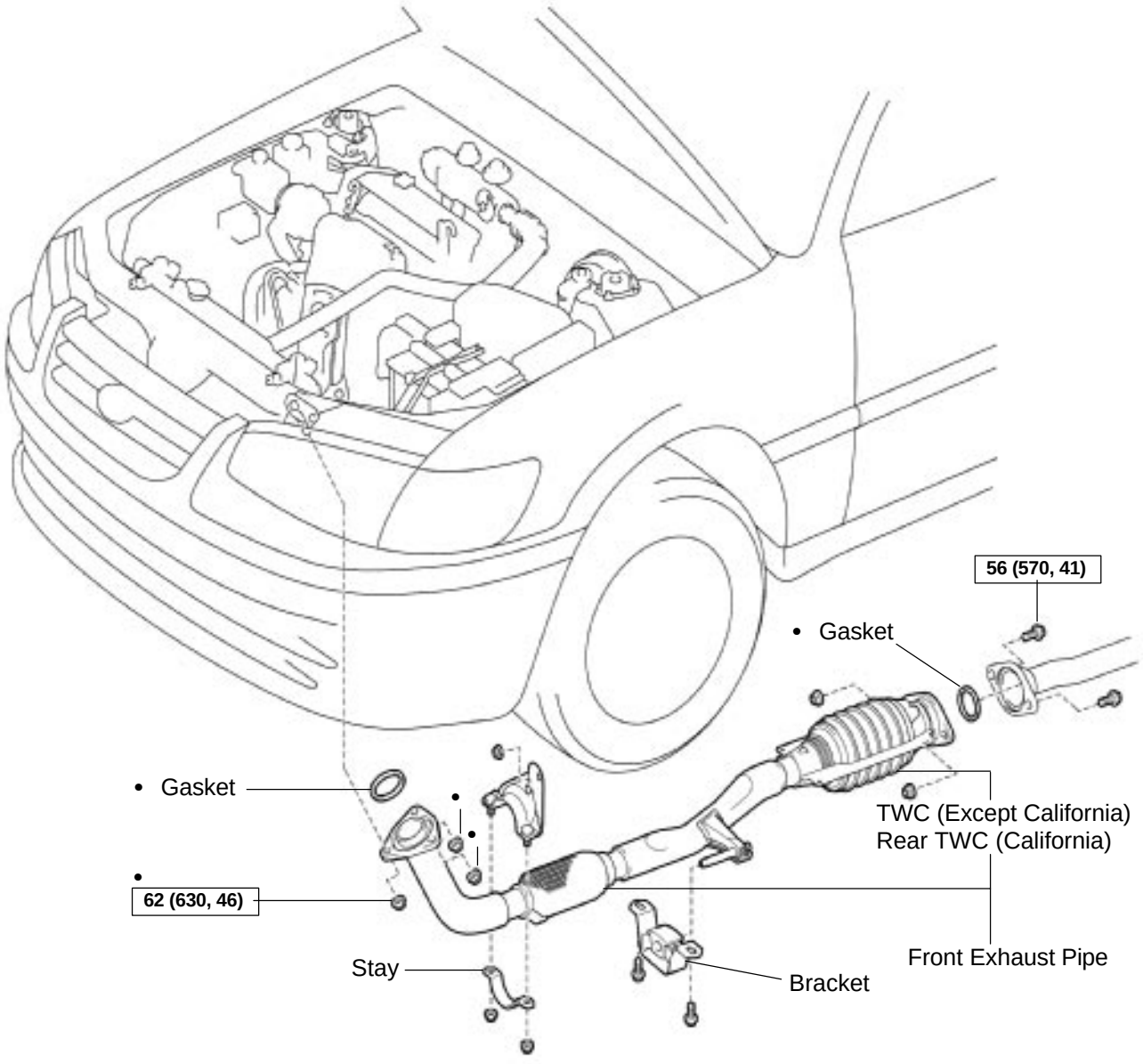

N·m (kgf·cm, ft·lbf): Specified torque
• Non–reusable part

B06538

EMISSION CONTROL SYSTEM

EC01U–03

PURPOSE

The emission control systems are installed to reduce the amount of CO, HC and NOx exhausted from the engine ((3), (4), (5) and (6)), to prevent the atmospheric release of blow–by gas–containing HC (1) and evaporated fuel containing HC being released from the fuel tank (2).
The function of each system is shown in these table.

System	Abbreviation	Function
(1) Positive Crankcase Ventilation	PCV	Reduces HC
(2) Evaporative Emission Control	EVAP	Reduces evaporated HC
(3) Exhaust Gas Recirculation	EGR	Reduces NOx
(4) Warm Up Three–Way Catalytic Converter	WU–TWC	Reduces HC, CO and NOx
(5) Three–Way Catalytic Converter	TWC	Reduces HC, CO and NOx
(6) Sequential Multiport Fuel Injection*	SFI	Injects a precisely timed, optimum amount of fuel for reduced exhaust emissions

Remark: * For inspection and repair of the SFI system, refer to the SF section of this manual.

PARTS LAYOUT AND SCHEMATIC DRAWING

EC01V–03

LOCATION

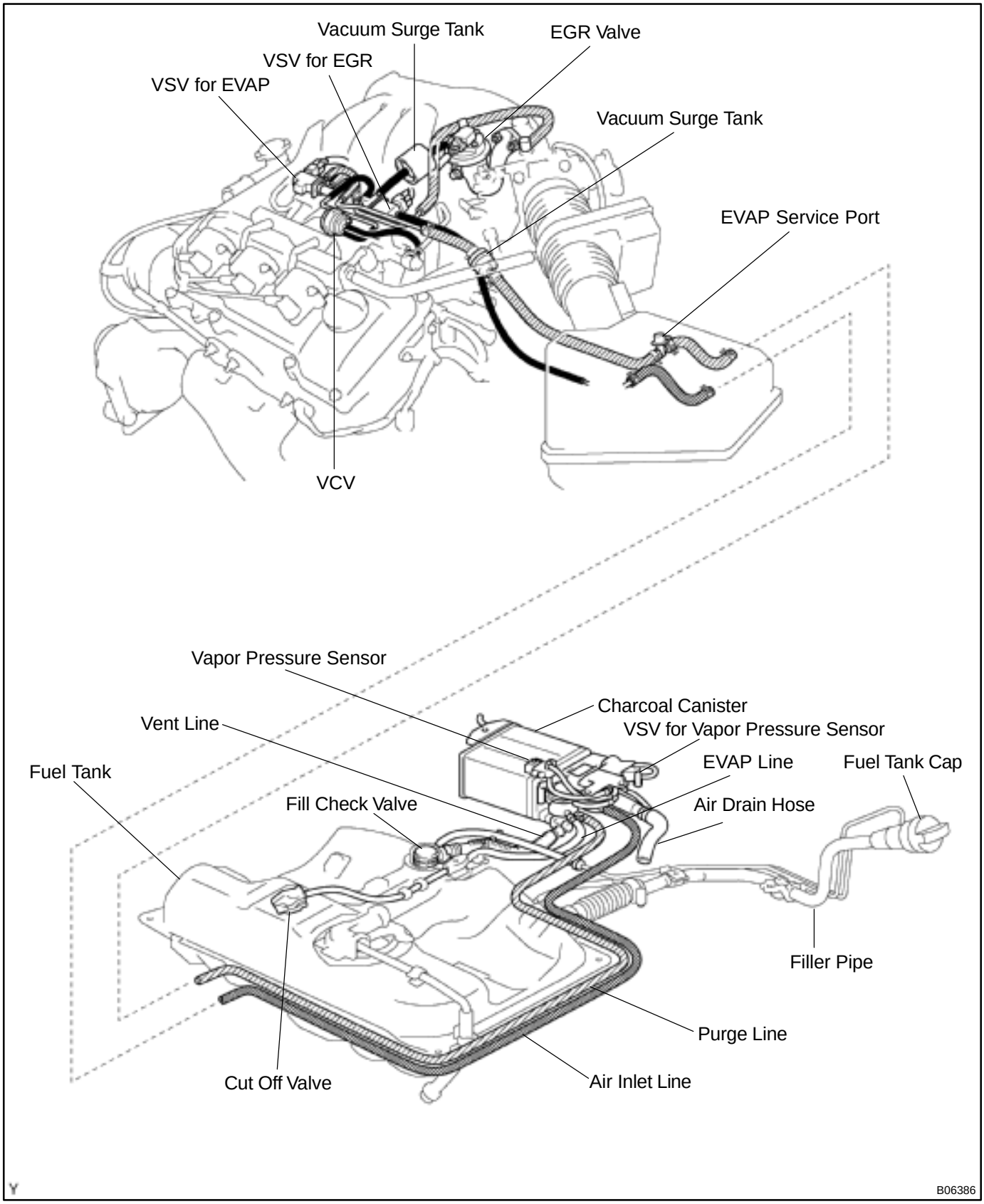

EC01W–03

DRAWING

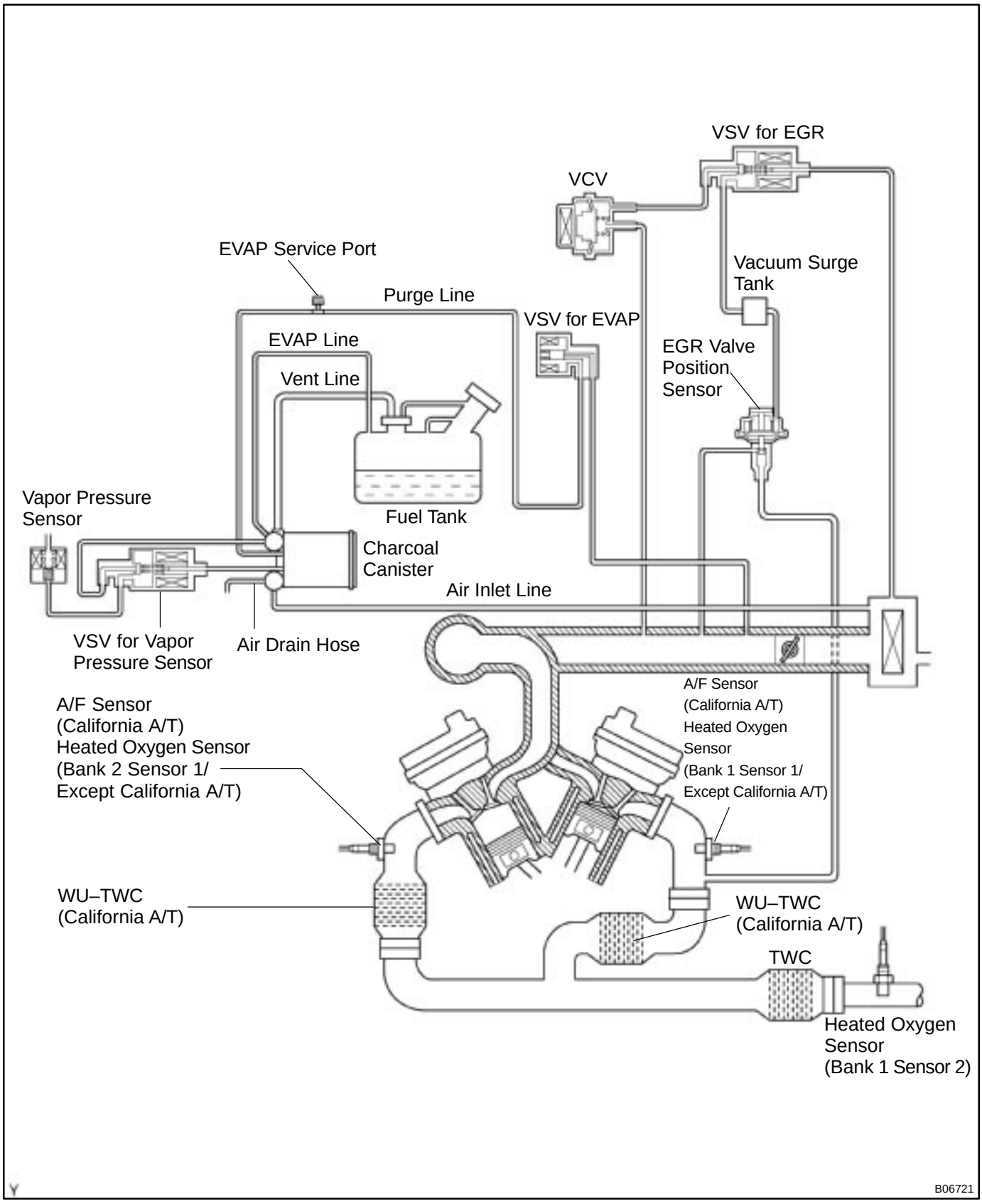

POSITIVE CRANKCASE VENTILATION (PCV) SYSTEM

EC01X–03

INSPECTION

1. INSPECT PCV VALVE

(a) Remove the PCV valve.

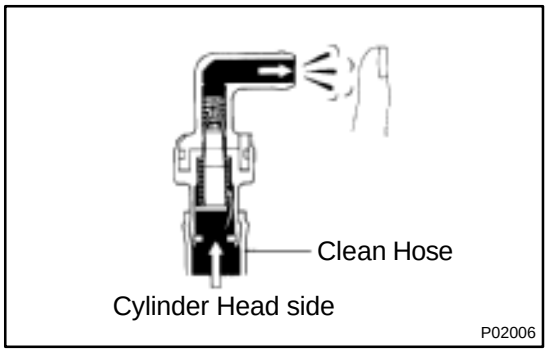

(b) Install clean hose to the PCV valve.

(c) Inspect the PCV valve operation.

(1) Blow air into the cylinder head side, and check that air passes through easily.

CAUTION:
Do not suck air through the valve.
Petroleum substances inside the valve are harmful.

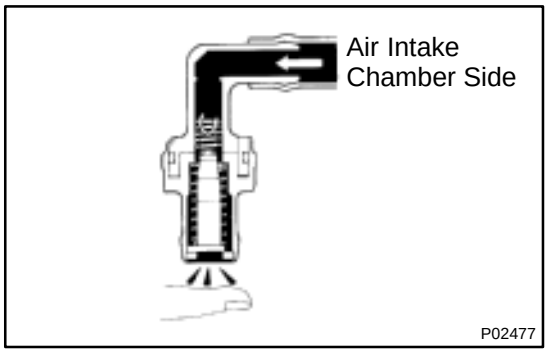

(2) Blow air into the air intake chamber side, and check that air passes through with difficulty.

If operation is not as specified, replace the PCV valve.

(d) Remove clean hose from the PCV valve.

(e) Reinstall the PCV valve.

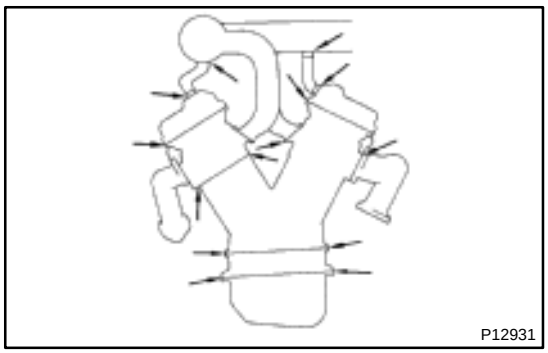

2. INSPECT HOSES, CONNECTIONS AND GASKETS

Visually check for cracks, leaks or damage.

EVAPORATIVE EMISSION (EVAP) CONTROL SYSTEM

EC0AU–01

COMPONENTS

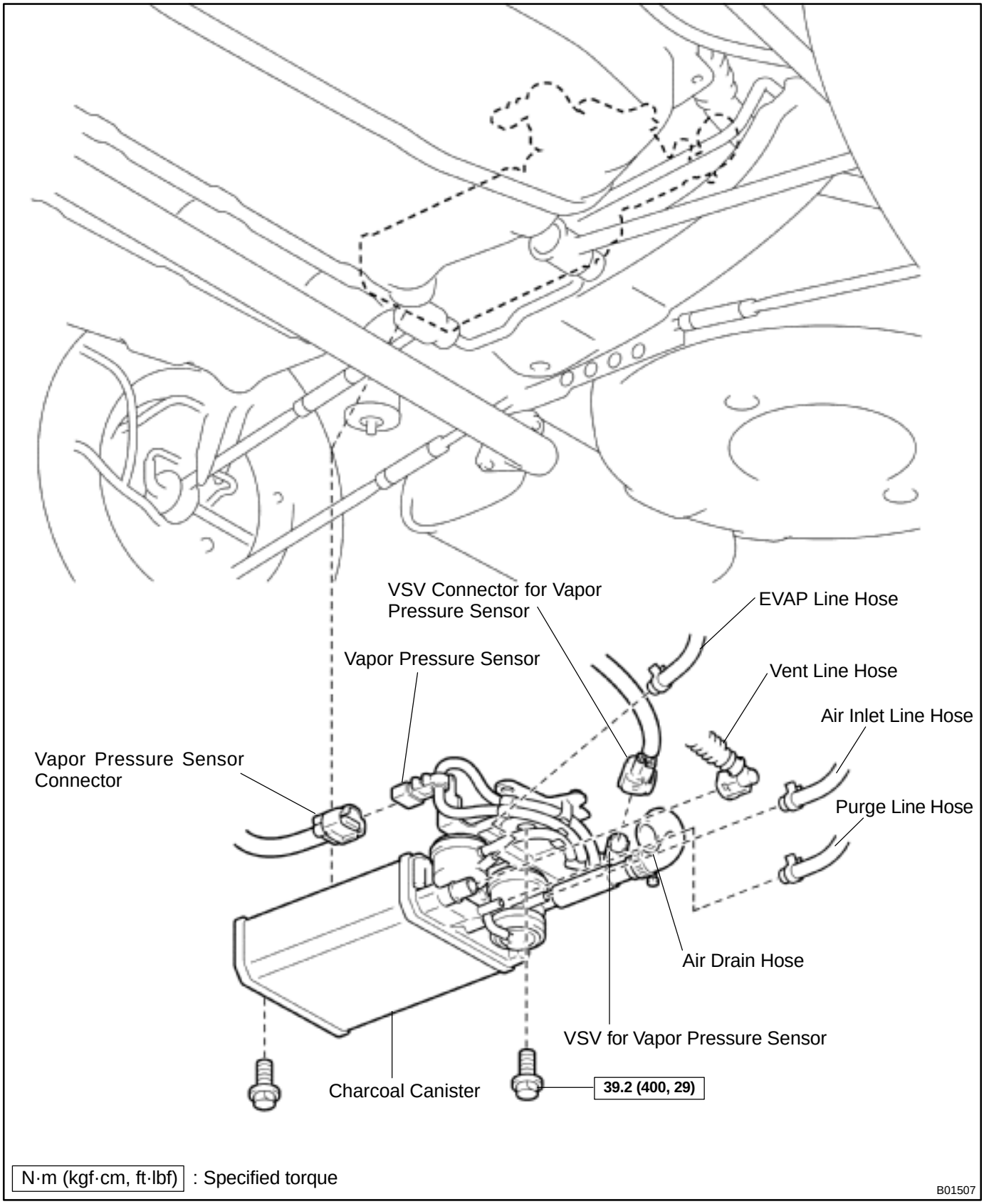

EC0AV–01

INSPECTION

1. INSPECT LINES AND CONNECTORS

Visually check for loose connections, sharp bends or damage.

2. INSPECT FUEL TANK FILLER PIPE

Visually check for deformation, cracks or fuel leakage.

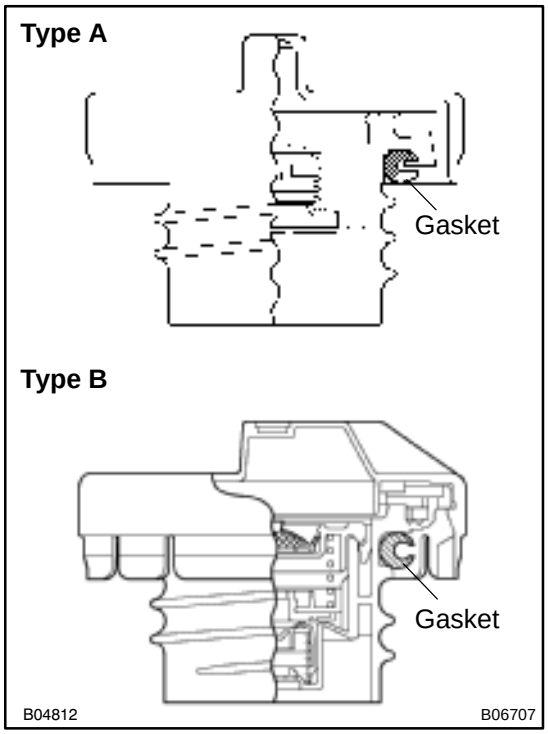

3. INSPECT FUEL TANK CAP

Visually check if the cap and/or gasket are deformed or damaged.

If necessary, repair or replace the cap.

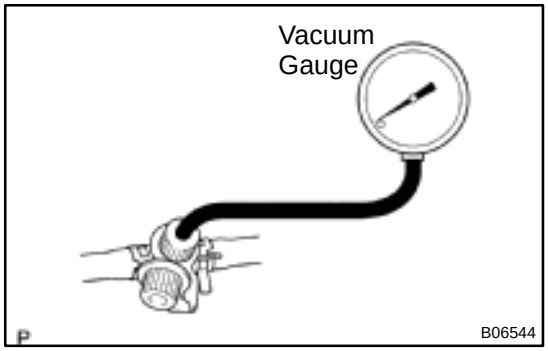

4. INSPECT EVAP SYSTEM LINE

(a) Warm up the engine and stop the engine.
Allow the engine to warm up to normal operating temperature.

(b) Install a vacuum gauge (EVAP control system test equipment vacuum gauge) to the EVAP service port on the purge line.

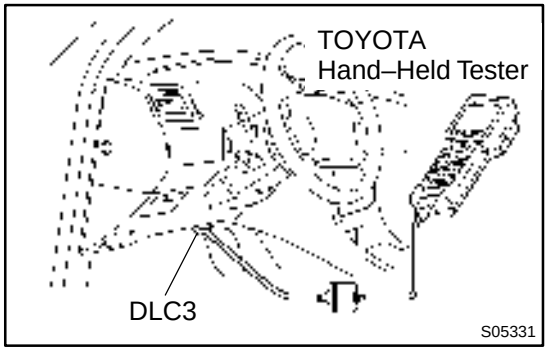

(c) TOYOTA Hand–Held Tester:
Forced driving of the VSV for the EVAP.
(1) Connect a TOYOTA hand–held tester to the DLC3.
(2) Start the engine.
(3) Push the TOYOTA hand–held tester main switch ON.
(4) Use the ACTIVE TEST mode on the TOYOTA hand–held tester to operate the VSV for the EVAP.

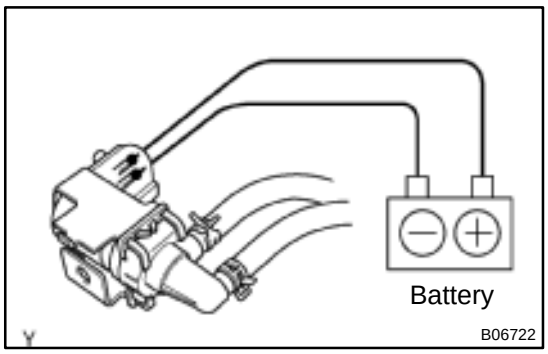

(d) If you have no TOYOTA Hand–Held Tester:
Forced driving of the VSV for the EVAP.
(1) Disconnect the VSV connector for the EVAP.
(2) Connect the positive (+) and negative (–) leads from the battery to the VSV terminals for the EVAP.
(3) Start the engine.

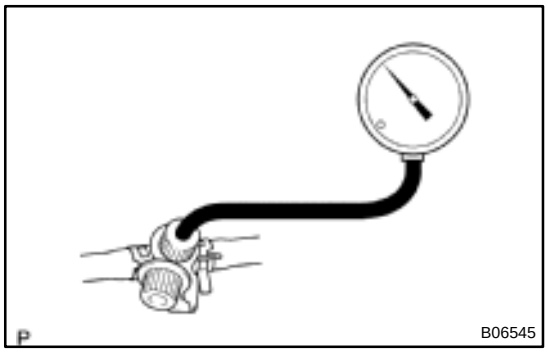

(e) Check the vacuum at idle.
Vacuum:
Maintain at 0.368 – 19.713 in.Hg (5 – 268 in.Aq) for over 5 seconds

HINT:
If the vacuum does not change, you can conclude that the hose connecting the VSV to the service port has come loose or is blocked, or the VSV is malfunctioning.

(f) TOYOTA Hand–Held Tester:
Conclude forced driving of the VSV for the EVAP.
(1) Stop the engine.
(2) Disconnect the TOYOTA hand–held tester from the DLC3.

(g) If you have no TOYOTA Hand–Held Tester:
Conclude forced driving of the VSV for the EVAP.
(1) Stop the engine.
(2) Disconnect the positive (+) and negative (–) leads from the battery from the VSV terminals for the EVAP.
(3) Connect the VSV connector for the EVAP.

(h) Disconnect the vacuum gauge from the EVAP service port on the purge line.

(i) Connect a pressure gauge to the EVAP service port on the purge line.

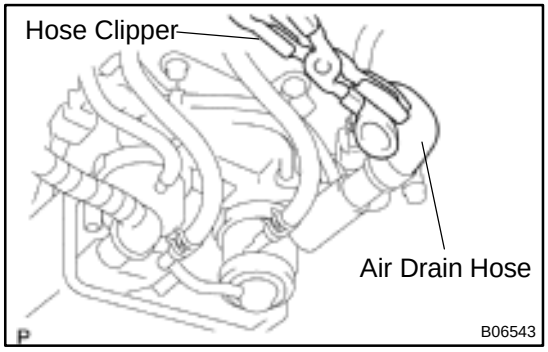

(j) Check the pressure.
(1) Close off the air drain hose at the marked position of the canister with a hose clipper or similar instrument.

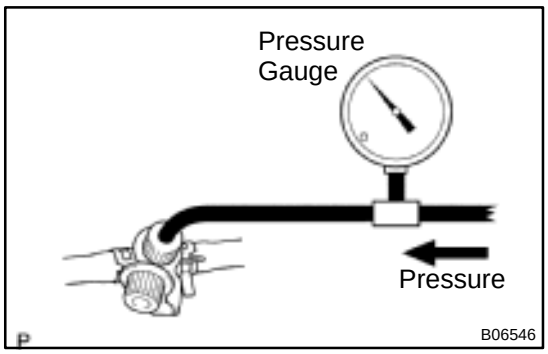

(2) Add the pressure (13.5 – 15.5 in.Aq) from the EVAP service port.

Pressure:

2 minutes after the pressure is added, the gauge should be over 7.7 – 8.8 in.Aq.

HINT:

If you can't add pressure, you can conclude that the hose connecting the VSV ~ canister ~ fuel tank has slipped off or the VSV is open.

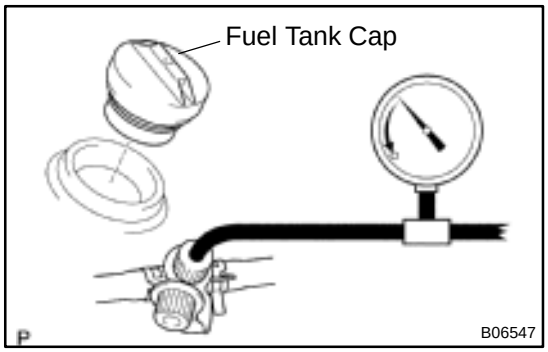

(3) Check if the pressure decreases when the fuel tank cap is removed while adding pressure.

HINT:

If the pressure does not decrease when the filler cap is removed, then you can conclude that the hose connecting the service port to the fuel tank is blocked, etc.

(k) Disconnect the pressure gauge from the EVAP service port on the purge line.

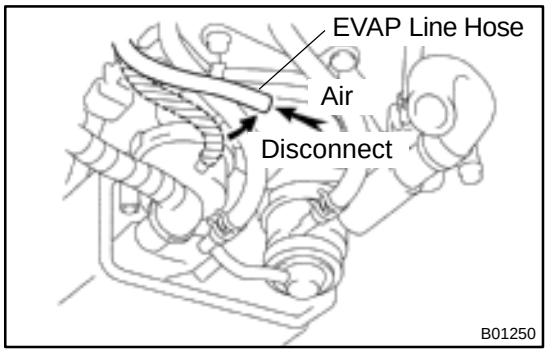

5. CHECK AIRTIGHTNESS IN FUEL TANK AND FILLER PIPE

(a) Disconnect the EVAP line hose from the charcoal canister side and then pressurize and make the internal pressure in the fuel tank 4 kPa (41 gf/cm^2, 0.58 psi).

(b) Check that the internal pressure of the fuel tank can be hold for 1 minute.

(c) Check the connected portions of each hose and pipe.

(d) Check the installed parts on the fuel tank.

If there is no abnormality, replace the fuel tank and filler pipe.

(e) Reconnect the EVAP line hose to the charcoal canister.

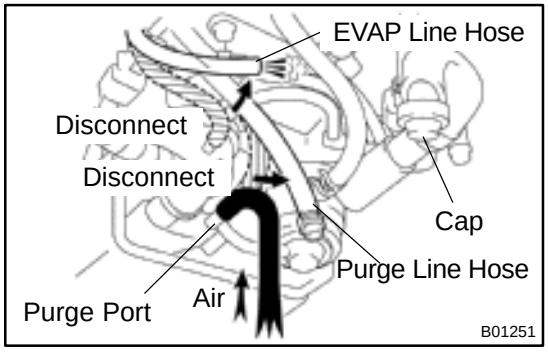

6. INSPECT FUEL CUTOFF VALVE AND FILL CHECK VALVE

(a) Disconnect the purge line hose and EVAP line hose from the charcoal canister.

(b) Plug the cap to the air drain hose.

(c) Pressurize 4 kPa (41 gf/cm^2, 0.58 psi) to the purge port and check that there is ventilation through the EVAP line hose.

HINT:
In the condition that the fuel fuel is full, as the float value of the fill check valve is closed and has no ventilation, it is necessary to check the fuel amount (volume).

(d) Check if there is any struck in the vent line hose and EVAP line hose.

If there is no stuck in hoses, replace the fuel cutoff valve and fill check valve.

(e) Reconnect the purge line hose and EVAP line hose to the charcoal canister.

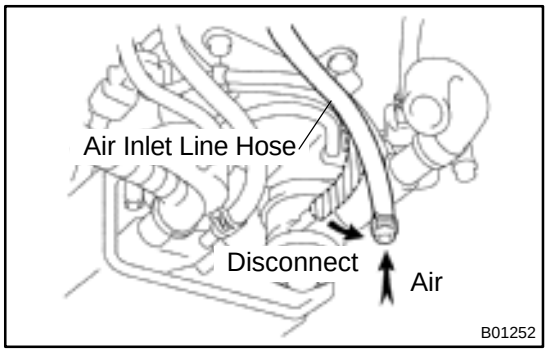

7. CHECK AIR INLET LINE

(a) Disconnect the air inlet line hose from the charcoal canister.

(b) Check that there is ventilation in the air inlet line.

(c) Reconnect the air inlet line hose to the charcoal canister.

8. REMOVE CHARCOAL CANISTER ASSEMBLY

(a) Disconnect the VSV connector.

(b) Disconnect the vapor pressure sensor connector.

(c) Disconnect the purge line hose, EVAP line hose and air inlet line hose from the charcoal canister.

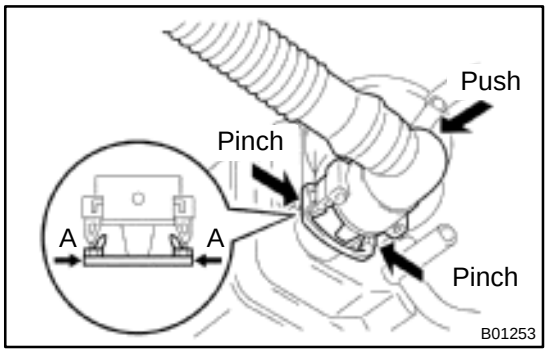

(d) Disconnect the vent line hose from the charcoal canister.
   (1) Push the connector deep inside.
   (2) Pinch portion A.
   (3) Pull out the connector.

(e) Remove the 2 charcoal canister mounting bolts.

(f) Remove the vapor pressure sensor mounting bolt.

(g) Remove the charcoal canister assembly.

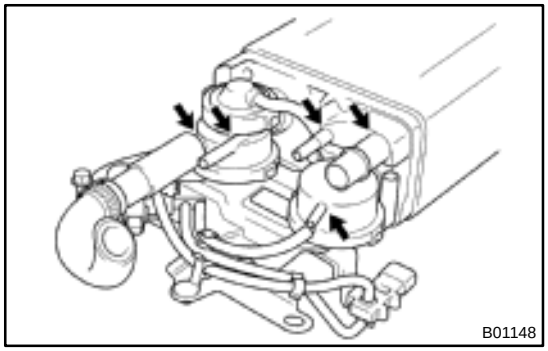

9. INSPECT CHARCOAL CANISTER

(a) Visually check the charcoal canister for cracks or damage.

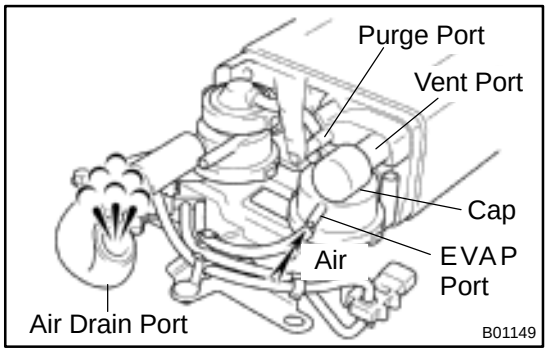

(b) Inspect the charcoal canister operation.
   (1) Plug the vent port with a cap.
   (2) While holding the purge port closed, blow air (1.76 kPa, 18 gf/cm^2, 0.26 psi) into the EVAP port and check that air flows from the air drain port.

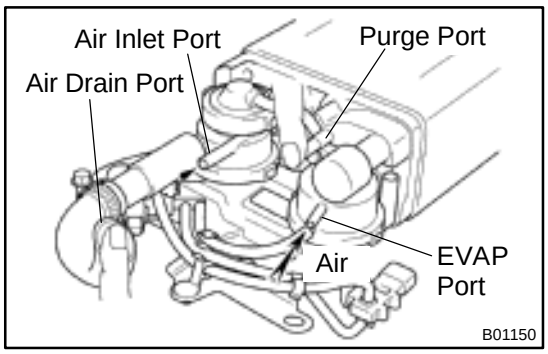

(3) While holding the purge port and the air drain port closed, blow air (1.76 kPa, 18 gf/cm^2, 0.26 psi) into the EVAP port and check that air does not flow from the air inlet port.

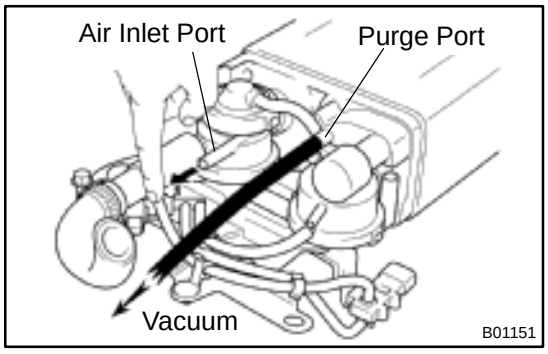

(4) Apply vacuum (3.43 kPa, 25.7 mmHg, 1.01 in.Hg) to the purge port, check that the vacuum does not decrease when the air inlet port is closed, and check that the vacuum decreases when the air inlet port is released.

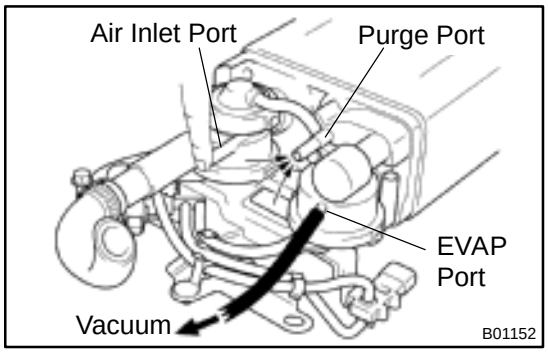

(5) While holding the air inlet port closed, apply vacuum (3.43 kPa, 25.7 mmHg, 1.01 in.Hg) to the EVAP port and check that air flows into the purge port.

If operation is not as specified, replace the charcoal canister.

(6) Remove the cap from the vent port.

10. INSPECT VSV FOR EVAP (See page SF–58)

11. INSPECT VSV FOR VAPOR PRESSURE SENSOR (See page SF–62)

12. INSPECT VAPOR PRESSURE SENSOR (See page SF–65)

13. REINSTALL CHARCOAL CANISTER ASSEMBLY

EXHAUST GAS RECIRCULATION (EGR) SYSTEM

EC0AW–01

INSPECTION

1. INSPECT EGR SYSTEM (See page DI–358)

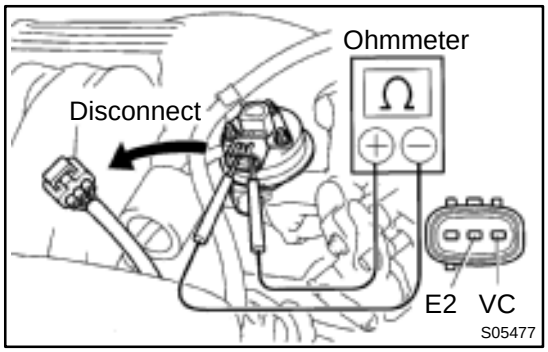

2. INSPECT EGR VALVE POSITION SENSOR

(a) Inspect the resistance of the EGR valve position sensor.

(1) Disconnect the EGR valve position sensor connector.

(2) Using an ohmmeter, measure the resistance between the terminals VC and E2.

Resistance: 1.5 – 4.3 kΩ

If the resistance is not as specified, replace the EGR valve position sensor.

(3) Reconnect the EGR valve position sensor connector.

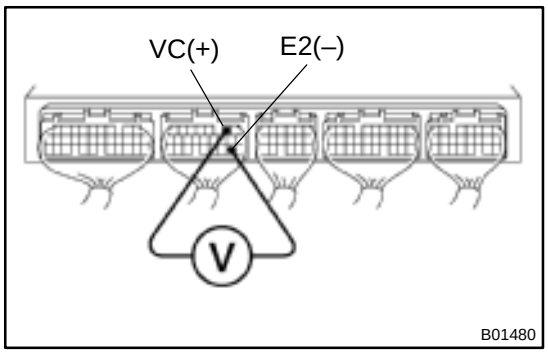

(b) Inspect the power output voltage of the EGR valve position sensor.

(1) Disconnect the vacuum hose from the EGR valve.

(2) Turn the ignition switch ON.

(3) Connect a voltmeter to terminals VC and E2 of the ECM, and measure the power source voltage.

Voltage: 4.5 – 5.5 V

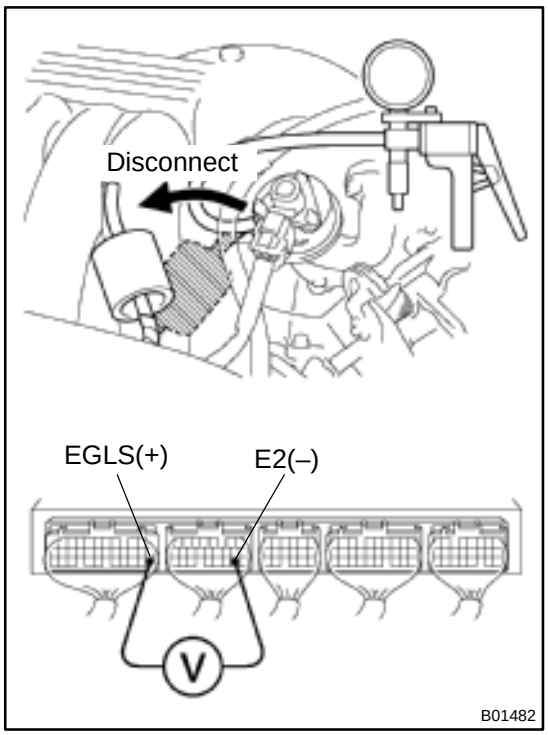

(4) Connect a voltmeter to terminals EGLS and E2 of the ECM, and measure the power outlet voltage under the following conditions:
- Using a MITYVAC (Hand–Held Vacuum Pump), apply a vacuum (17.3 kPa, 130 mmHg, 5.1 in.Hg) to the EGR valve.

Voltage: 3.2 – 5.1 V
- Release the vacuum from the EGR valve.

Voltage: 0.4 – 1.6 V

If the voltage is not as specified, replace the EGR valve position sensor.

(5) Reconnect the vacuum hose to the EGR valve.

3. REMOVE EGR POSITION SENSOR

Remove the 3 nuts and EGR valve position sensor from the EGR valve.

Torque: 2 N·m (20 kgf·cm, 17 in.·lbf)

4. REINSTALL EGR POSITION SENSOR

Installation is the reverse order of removal.

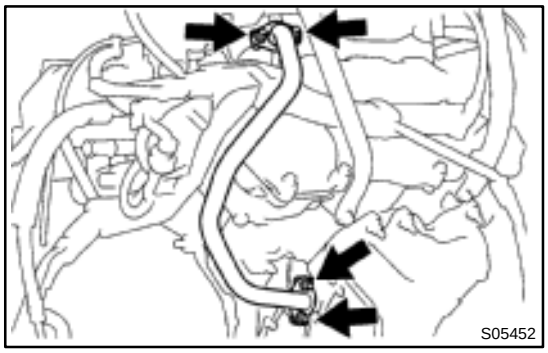

5. REMOVE EGR VALVE

(a) Remove the EGR pipe.
- Remove the 4 nuts, EGR pipe and 2 gaskets.

HINT:

At the time of installation, please refer to the following items.

Install 2 new gaskets.

Torque: 12 N·m (120 kgf·cm, 9 ft·lbf)

(b) Disconnect the EGR gas temperature sensor connector and clamp.

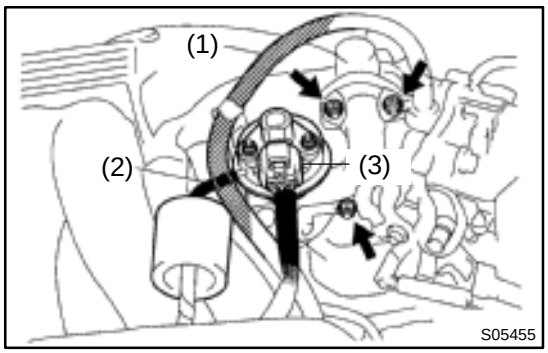

(c) Remove the EGR valve.
(1) Disconnect the EVAP hose from the EGR valve hook.
(2) Disconnect the vacuum hose from the EGR valve.
(3) Disconnect the EGR valve position sensor connector.

(d) Remove the 3 nuts, EGR valve and gasket.

HINT:

At the time of installation, please refer to the following items.

Install a new gasket.

Torque: 12 N·m (120 kgf·cm, 9 ft·lbf)

(e) Remove the EGR gas temperature sensor.

Torque: 20 N·m (200 kgf·cm, 14 ft·lbf)

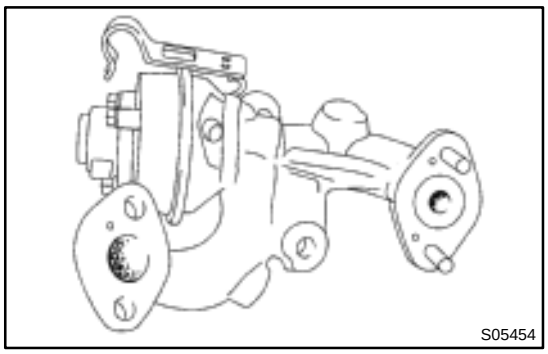

6. INSPECT EGR VALVE

Check for sticking and heavy carbon deposits.

If a problem is found, replace the EGR valve.

7. REINSTALL EGR VALVE

Installation is the reverse order of removal.

8. REMOVE VCV

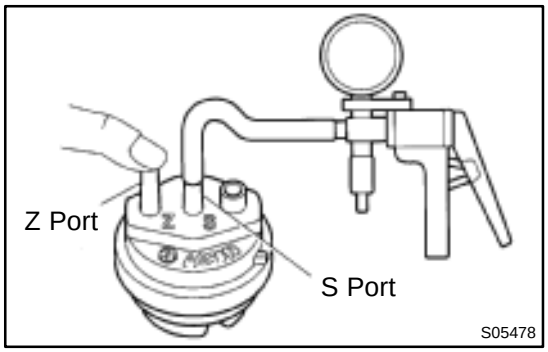

9. INSPECT VCV

(a) Connect the MITYVAC (Hand–Held Vacuum Pump) to port S of the VCV.

(b) Plug port Z completely with fingers.

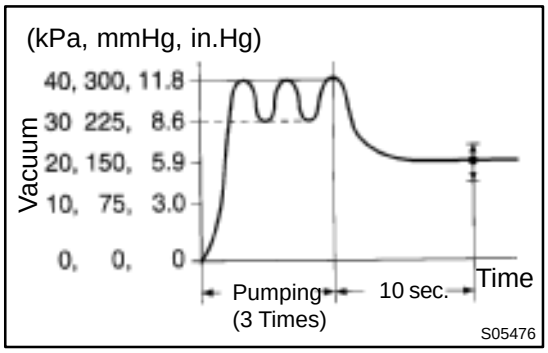

(c) Perform pumping 3 times and apply vacuum as shown in the illustration.

(d) Stop the performing pumping and check the indicated value of the MITYVAC after about 10 seconds.

Standard value:

15 – 24 kPa (112 – 180 mmHg, 4.4 – 7.1 in.Hg)

If the indicated value is not as specified, replace the VCV.

10. REINSTALL VCV

11. INSPECT VSV FOR EGR (See page SF–56)

WARM UP THREE–WAY CATALYTIC CONVERTER (WU–TWC) SYSTEM (California A/T)

EC020–04

ON–VEHICLE INSPECTION

1. INSPECT EXHAUST PIPE ASSEMBLY

(a) Check the connections for looseness or damage.

(b) Check the clamps for weakness, cracks or damage.

2. INSPECT WU–TWC

Check for dents or damage.

If any part of the protector is damaged or dented to the extent that it contacts the WU–TWC, repair or replace it.

3. INSPECT WU–TWC HEAT INSULATOR

(a) Check the heat insulator for damage.

(b) Check for adequate clearance between the catalytic converter and heat insulator.

EC021–04

COMPONENTS

WU–TWC for Bank 1

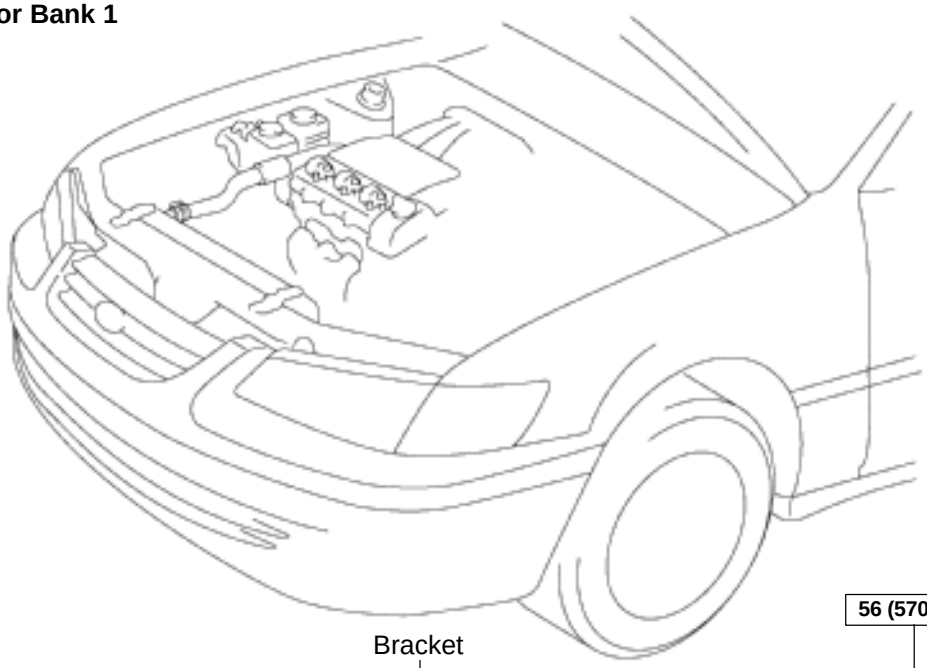

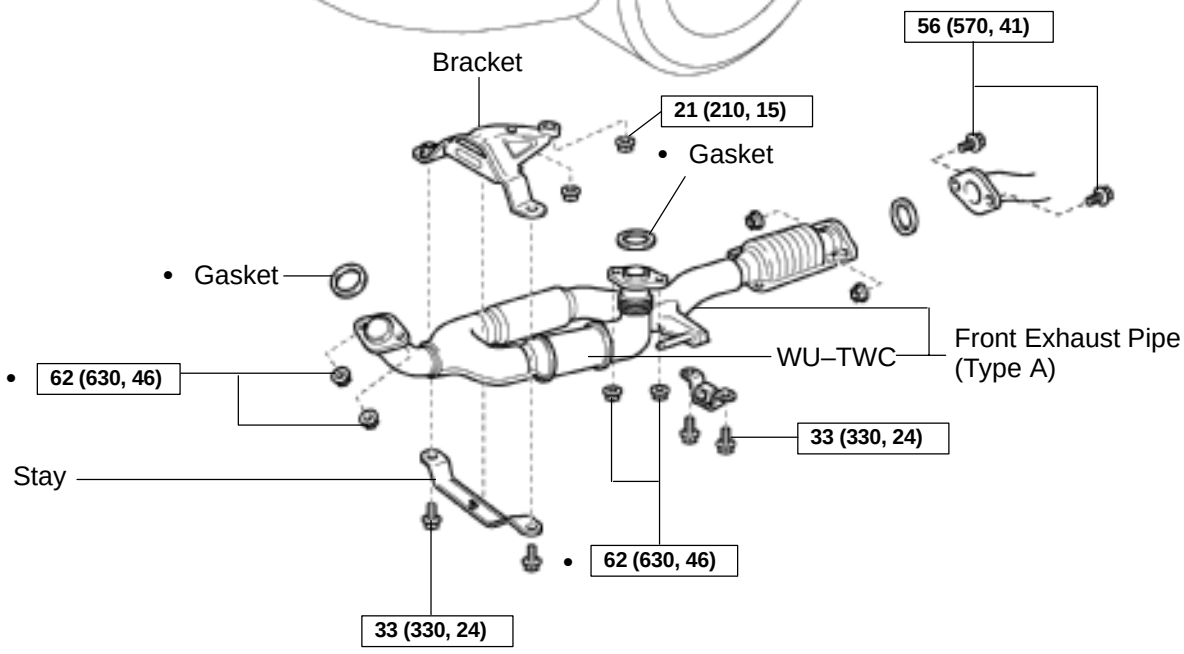

Type B

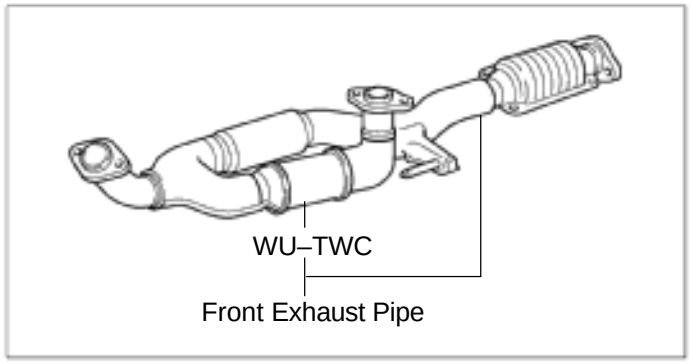

N·m (kgf·cm, ft·lbf) : Specified torque

• Non–reusable part

B06395

WU–TWC for Bank 2

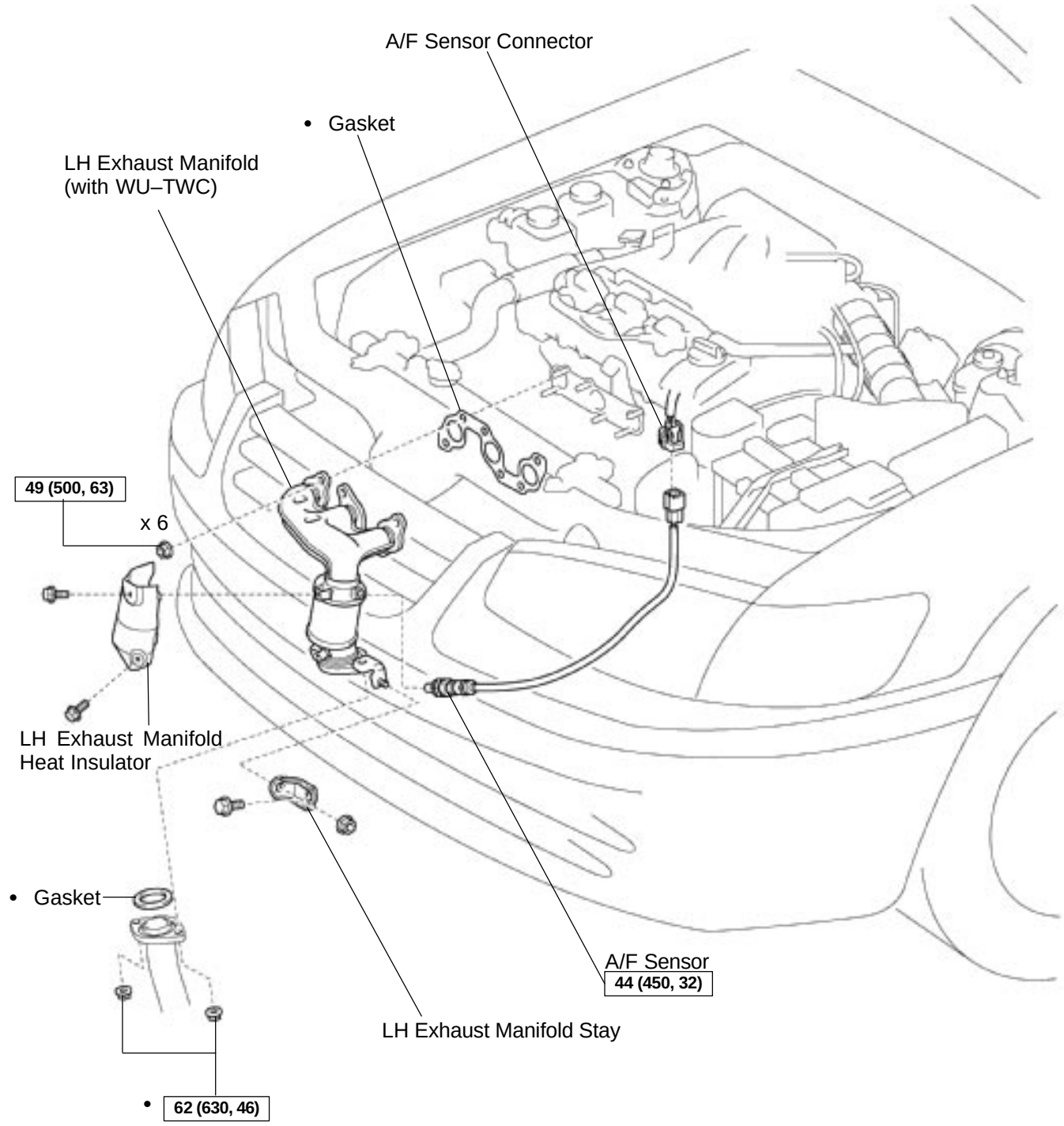

N·m (kgf·cm, ft·lbf) : Specified torque
• Non–reusable part

B06478

THREE–WAY CATALYTIC CONVERTER (TWC) SYSTEM

EC022–04

ON–VEHICLE INSPECTION

1. INSPECT EXHAUST PIPE ASSEMBLY

(a) Check the connections for looseness or damage.

(b) Check the clamps for weakness, cracks or damage.

2. INSPECT TWC

Check for dents or damage.

If any part of the protector is damaged or dented to the extent that it contacts the TWC, repair or replace it.

3. INSPECT TWC HEAT INSULATOR

(a) Check the heat insulator for damage.

(b) Check for adequate clearance between the catalytic converter and heat insulator.

EC023–04

COMPONENTS

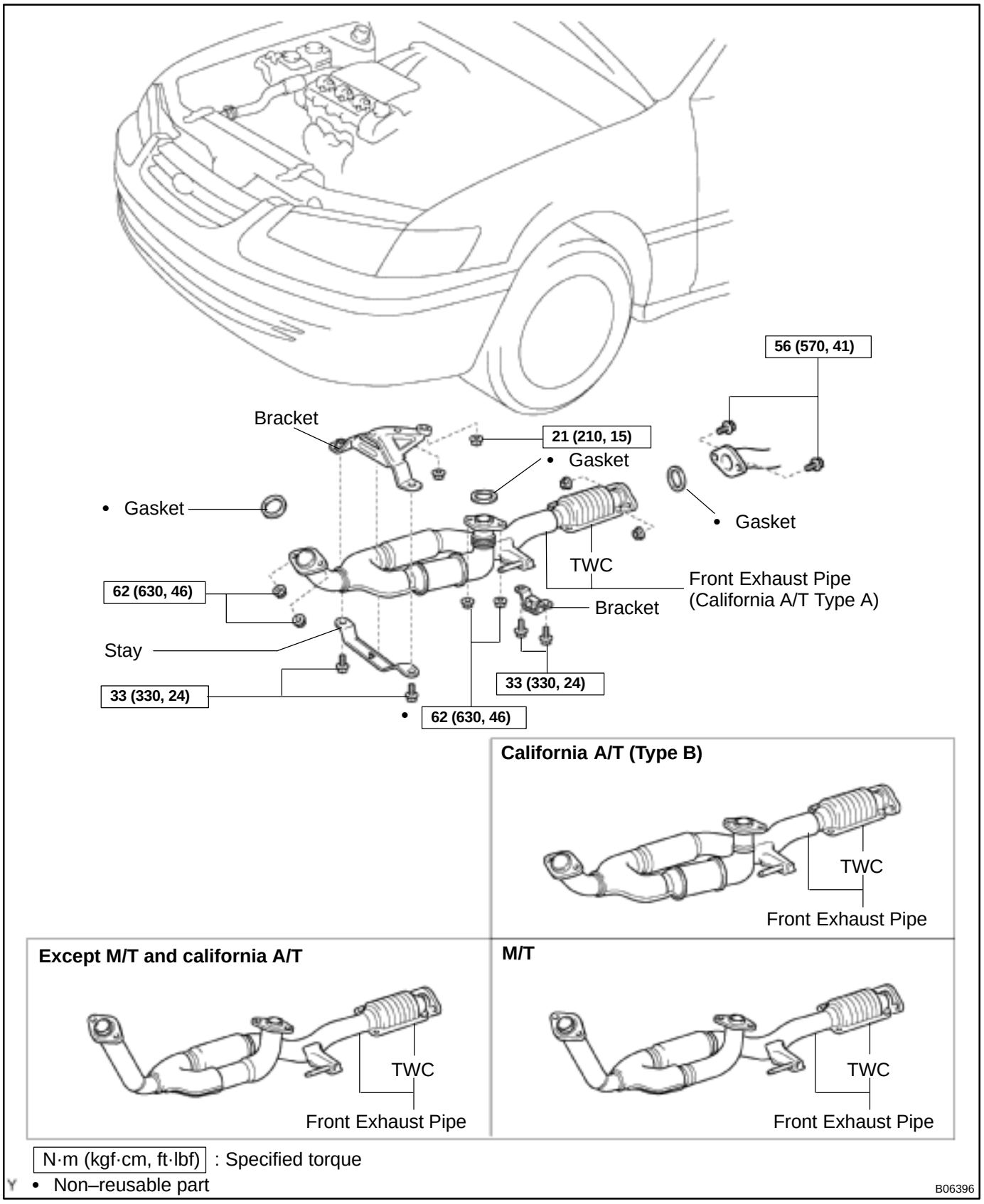

N·m (kgf·cm, ft·lbf) : Specified torque

• Non–reusable part

B06396

CO/HC

INSPECTION

EM07X–05

HINT:

This check is used only to determine whether or not the idle CO/HC complies with regulations.

1. INITIAL CONDITIONS

(a) Engine at normal operating temperature
(b) Air cleaner installed
(c) All pipes and hoses of air induction system connected
(d) All accessories switched OFF
(e) All vacuum lines properly connected

HINT:

All vacuum hoses for EGR system, etc. should be properly connected.

(f) SFI system wiring connectors fully plugged
(g) Ignition timing checked correctly
(h) Transmission in neutral position
(i) Tachometer and CO/HC meter calibrated by hand

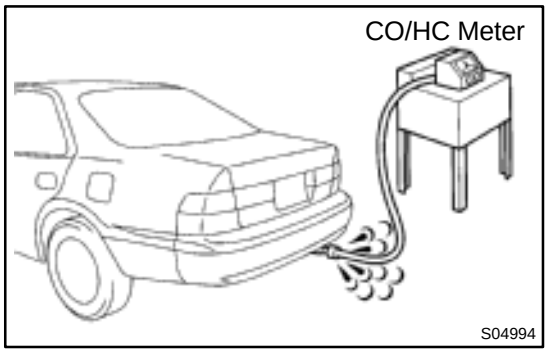

2. START ENGINE

3. RACE ENGINE AT 2,500 RPM FOR APPROX. 180 SECONDS

4. INSERT CO/HC METER TESTING PROBE AT LEAST 40 cm (1.3 ft) INTO TAILPIPE DURING IDLING

5. IMMEDIATELY CHECK CO/HC CONCENTRATION AT IDLE AND/OR 2,500 RPM

Complete the measuring within 3 minutes.

HINT:

When performing the 2 mode (2,500 rpm and idle) test, follow the measurement order prescribed by the applicable local regulations.

If the CO/HC concentration does not comply with regulations, troubleshoot in the order given below.

(1) Check oxygen sensor operation.
(See page DI–66)

(2) See the table below for possible causes, then inspect and correct the applicable causes if necessary.

CO	HC	Symptom	Causes
Normal	High	Rough idle	1. Faulty ignitions: Incorrect timing Fouled, shorted or improperly gapped plugs Open or crossed high–tension cords 2. Incorrect valve clearance 3. Leaky EGR valve 4. Leaky intake and exhaust valves 5. Leaky cylinder
Low	High	Rough idle (Fluctuating HC reading)	1. Vacuum leaks: PCV hose EGR valve Intake manifold Throttle body IAC valve Brake booster line 2. Lean mixture causing misfire
High	High	Rough idle (Black smoke from exhaust)	1. Restricted air filter 2. Faulty SFI system Faulty pressure regulator Defective ECT sensor Defective IAT sensor Faulty ECM Faulty injector Faulty throttle position sensor MAP sensor

COMPRESSION

EM07Y–05

INSPECTION

HINT:

If there is lack of power, excessive oil consumption or poor fuel economy, measure the compression pressure.

1. WARM UP AND STOP ENGINE

Allow the engine to warm up to normal operating temperature.

2. DISCONNECT IGNITION COIL CONNECTORS

3. REMOVE SPARK PLUGS (See page IG–1)

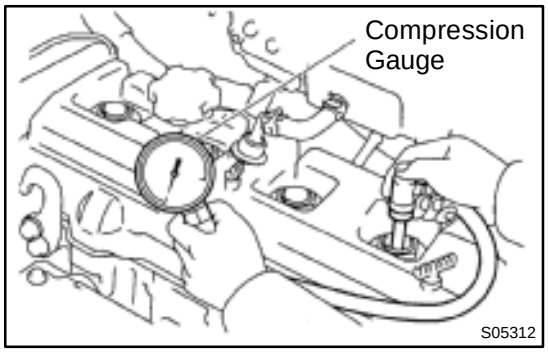

4. INSPECT CYLINDER COMPRESSION PRESSURE

(a) Insert a compression gauge into the spark plug hole.

(b) Fully open the throttle.

(c) While cranking the engine, measure the compression pressure.

HINT:

Always use a fully charged battery to obtain engine speed of 250 rpm or more.

(d) Repeat steps (a) through (c) for each cylinder.

NOTICE:

This measurement must be done in as short a time as possible.

Compression pressure:
1,226 kPa (12.5 kgf/cm^2, 178 psi) or more
Minimum pressure: 981 kPa (10.0 kgf/cm^2, 142 psi)
Difference between each cylinder:
98 kPa (1.0 kgf/cm^2, 14 psi) or less

(e) If the cylinder compression in one or more cylinders is low, pour a small amount of engine oil into the cylinder through the spark plug hole and repeat steps (a) through (c) for cylinders with low compression.

If adding oil helps the compression, it is likely that the piston rings and/or cylinder bore are worn or damaged.

If pressure stays low, a valve may be sticking or seating is improper, or there may be leakage past the gasket.

5. REINSTALL SPARK PLUGS (See page IG–1)

6. RECONNECT IGNITION COIL CONNECTORS

VALVE CLEARANCE

INSPECTION

EM07Z–03

HINT:

Inspect and adjust the valve clearance when the engine is cold.

1. REMOVE CYLINDER HEAD COVER

(a) Disconnect the 4 high–tension cords from the clamps on the cylinder head cover.

(b) Disconnect the 4 high–tension cords from the spark plugs.

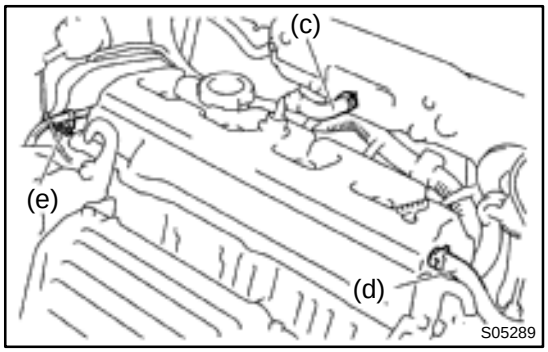

(c) Disconnect the PCV hose from the intake manifold.

(d) Disconnect the PCV hose from the cylinder head cover.

(e) Disconnect the engine wire clamp from the mounting bolt of the No.2 timing belt cover.

(f) Remove the cylinder head cover. (See page EM–33)

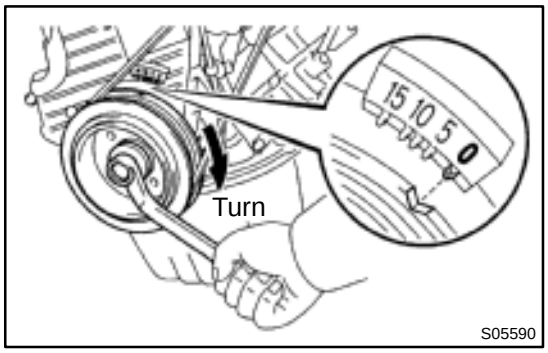

2. SET NO.1 CYLINDER TO TDC/COMPRESSION

(a) Turn the crankshaft pulley, and align its groove with timing mark ”0” of the No.1 timing belt cover.

(b) Check that the valve lifters on the No.1 cylinder are loose and valve lifters on the No.4 are tight.

If not, turn the crankshaft one revolution (360˚) and align the mark as above.

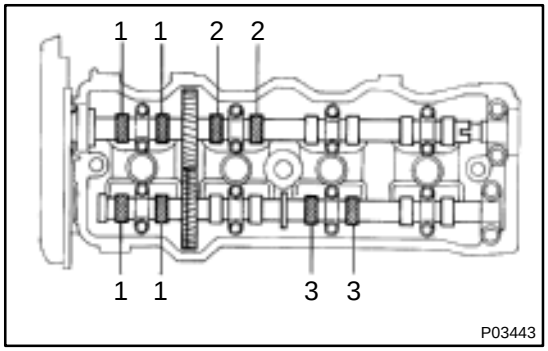

3. INSPECT VALVE CLEARANCE

(a) Check only the valves indicated.

(1) Using a feeler gauge, measure the clearance between the valve lifter and camshaft.

(2) Record the out–of–specification valve clearance measurements. They will be used later to determine the required replacement adjusting shim.

Valve clearance (Cold):

Intake	0.19 – 0.29 mm (0.007 – 0.011 in.)
Exhaust	0.28 – 0.38 mm (0.011 – 0.015 in.)

(b) Turn the crankshaft one revolution (360˚) and align the mark as above.

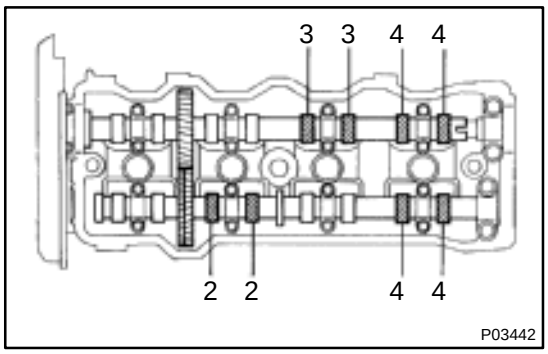

(c) Check only the valves indicated as shown. Measure the valve clearance. (See step (a))

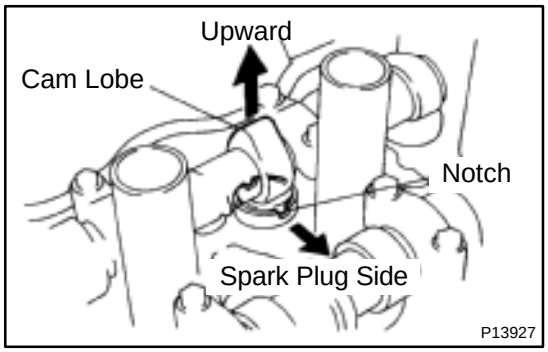

4. ADJUST VALVE CLEARANCE

(a) Remove the adjusting shim.

(1) Turn the crankshaft so that the cam lobe of the camshaft on the adjusting valve points upward.

(2) Position the notch of the valve lifter facing the spark plug side.

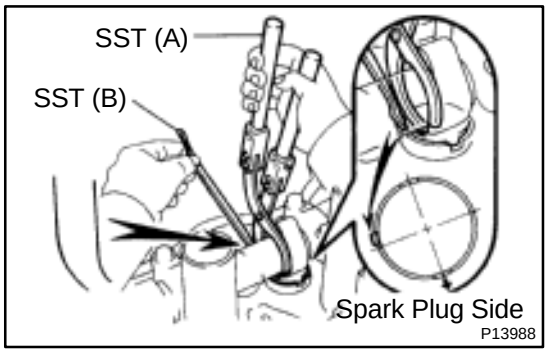

(3) Using SST (A), press down the valve lifter and place SST (B) between the camshaft and valve lifter. Remove SST (A).

SST 09248–55040 (09248–05410, 09248–05420)

HINT:

Apply SST (B) at slight angle on the side marked with ”9”, at the position shown in the illustration.

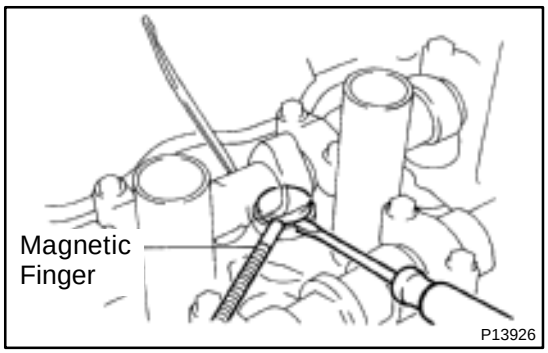

(4) Remove the adjusting shim with a small screwdriver and magnetic finger.

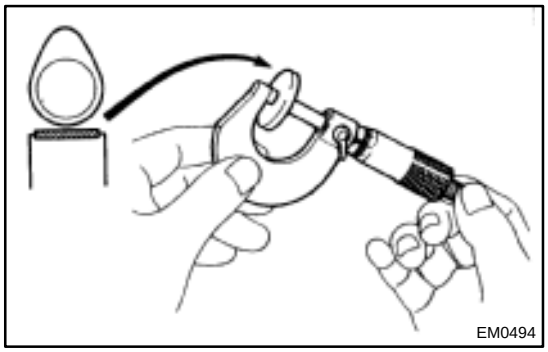

(b) Determine the replacement adjusting shim size by following the Formula or Charts:

(1) Using a micrometer, measure the thickness of the removed shim.

(2) Calculate the thickness of a new shim so that the valve clearance comes within specified value.

T ..... Thickness of removed shim

A ..... Measured valve clearance

N ..... Thickness of new shim

Intake: N = T + (A – 0.24 mm (0.009 in.))

Exhaust: N = T + (A – 0.33 mm (0.013 in.))

(3) Select a new shim with a thickness as close as possible to the calculated value.

HINT:

Shims are available in 17 sizes in increments of 0.05 mm (0.0020 in.), from 2.50 mm (0.0984 in.) to 3.30 mm (0.1299 in.).

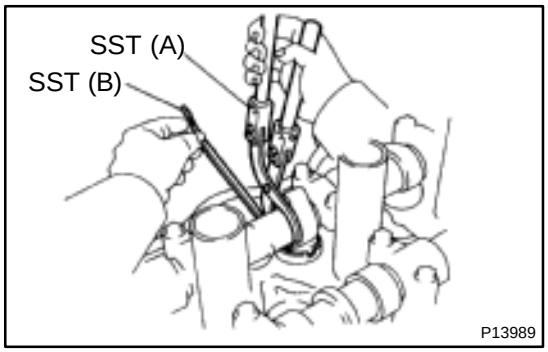

(c) Install a new adjusting shim.
  (1) Place a new adjusting shim on the valve lifter.
  (2) Using SST (A), press down the valve lifter and remove SST (B).

  SST 09248–55040 (09248–05410, 09248–05420)

(d) Recheck the valve clearance.

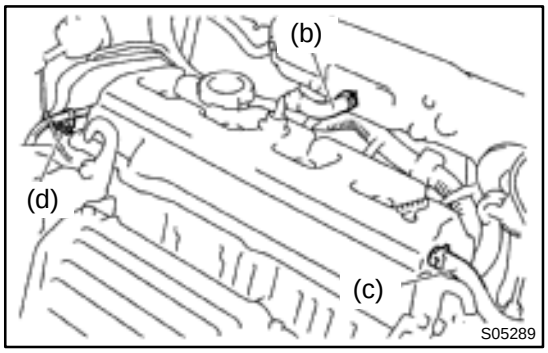

5. REINSTALL CYLINDER HEAD COVER

(a) Install the cylinder head cover. (See page EM–53)
(b) Connect the PCV hose to the intake manifold.
(c) Connect the PCV hose to the cylinder head cover.
(d) Install the engine wire clamp to the mounting bolt of the No.2 timing belt cover.
(e) Install the 4 high–tension cords to the clamps on the cylinder head cover.
(f) Connect the 4 high–tension cords to the spark plugs.

Adjusting Shim Selection Chart (Intake)

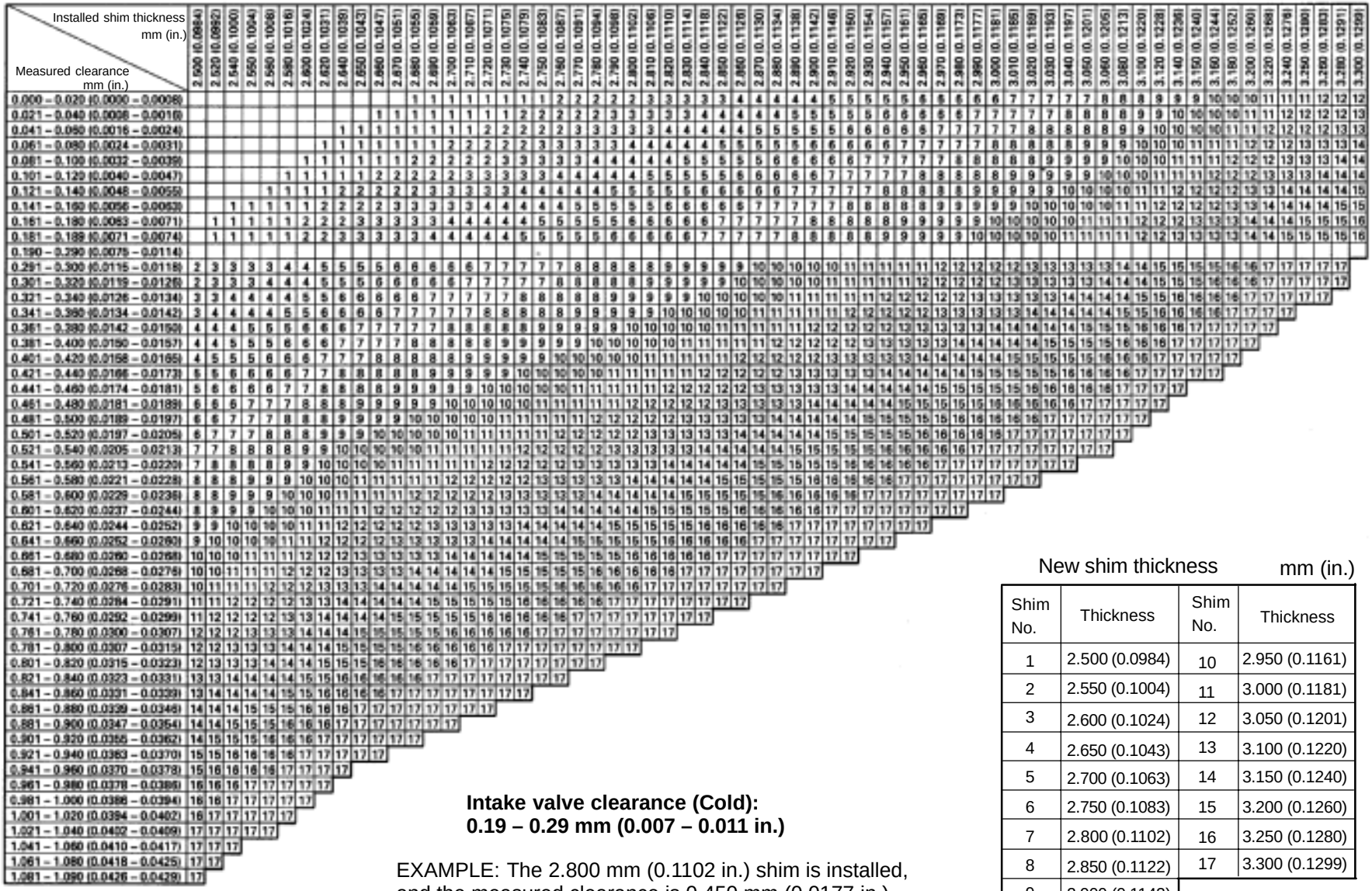

P03440

Intake valve clearance (Cold):
0.19 – 0.29 mm (0.007 – 0.011 in.)

EXAMPLE: The 2.800 mm (0.1102 in.) shim is installed, and the measured clearance is 0.450 mm (0.0177 in.). Replace the 2.800 mm (0.1102 in.) shim with a new No.11 shim.

New shim thickness mm (in.)

Shim No.	Thickness	Shim No.	Thickness
1	2.500 (0.0984)	10	2.950 (0.1161)
2	2.550 (0.1004)	11	3.000 (0.1181)
3	2.600 (0.1024)	12	3.050 (0.1201)
4	2.650 (0.1043)	13	3.100 (0.1220)
5	2.700 (0.1063)	14	3.150 (0.1240)
6	2.750 (0.1083)	15	3.200 (0.1260)
7	2.800 (0.1102)	16	3.250 (0.1280)
8	2.850 (0.1122)	17	3.300 (0.1299)
9	2.900 (0.1142)		

HINT: New shims have the thickness in millimeters imprinted on the face.

Adjusting Shim Selection Chart (Exhaust)

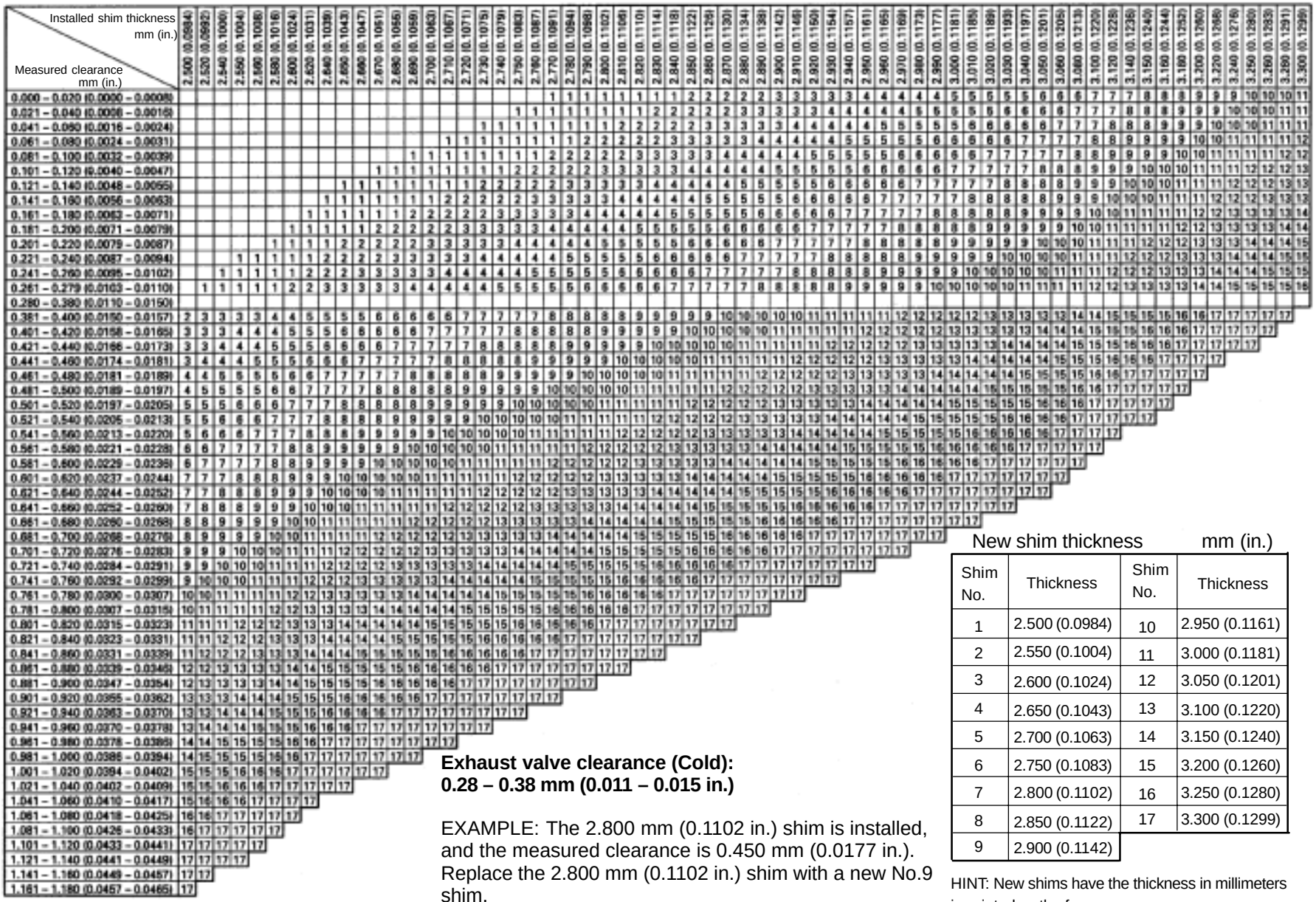

P03441

Exhaust valve clearance (Cold):
0.28 – 0.38 mm (0.011 – 0.015 in.)

EXAMPLE: The 2.800 mm (0.1102 in.) shim is installed, and the measured clearance is 0.450 mm (0.0177 in.). Replace the 2.800 mm (0.1102 in.) shim with a new No.9 shim.

New shim thickness mm (in.)

Shim No.	Thickness	Shim No.	Thickness
1	2.500 (0.0984)	10	2.950 (0.1161)
2	2.550 (0.1004)	11	3.000 (0.1181)
3	2.600 (0.1024)	12	3.050 (0.1201)
4	2.650 (0.1043)	13	3.100 (0.1220)
5	2.700 (0.1063)	14	3.150 (0.1240)
6	2.750 (0.1083)	15	3.200 (0.1260)
7	2.800 (0.1102)	16	3.250 (0.1280)
8	2.850 (0.1122)	17	3.300 (0.1299)
9	2.900 (0.1142)		

HINT: New shims have the thickness in millimeters imprinted on the face.

V00868

Author : Date : 1180

IGNITION TIMING

EM080–03

INSPECTION

1. WARM UP ENGINE

Allow the engine to warm up to normal operating temperature.

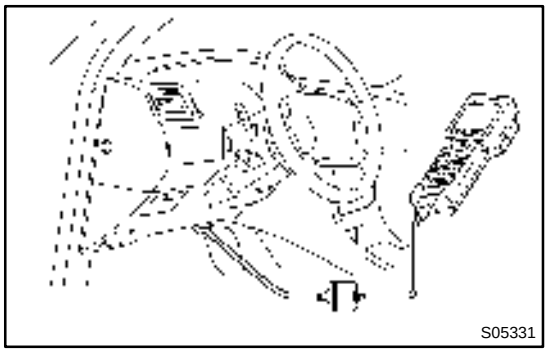

2. CONNECT TOYOTA HAND–HELD TESTER OR OBDII SCAN TOOL

(a) Remove the fuse cover on the instrument panel.

(b) Connect a TOYOTA hand–held tester or OBDII scan tool to the DLC3.

(c) Please refer to the TOYOTA hand–held tester or OBDII scan tool operator's manual for further details.

3. CONNECT TIMING LIGHT TO ENGINE

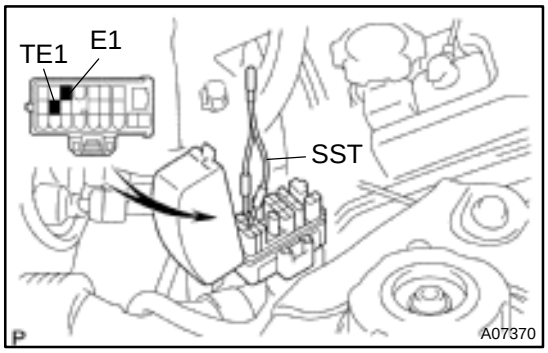

4. INSPECT IGNITION TIMING

(a) Using SST, connect terminals TE1 and E1 of the DLC1.
SST 09843–18020

HINT:

After engine rpm is kept at 1,000 – 1,300 rpm for 5 seconds, check that it returns to idle speed.

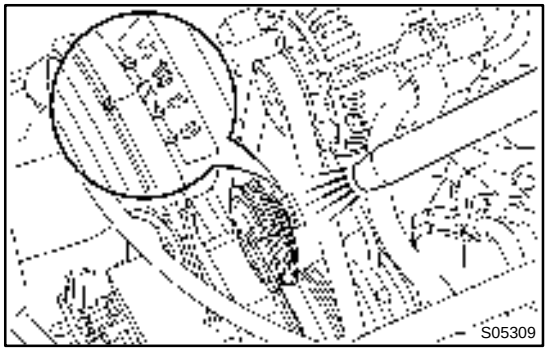

(b) Using a timing light, check the ignition timing.
Ignition timing: 8 – 12˚ BTDC @ idle (Transmission in neutral position)

(c) Remove the SST from the DLC1.
SST 09843–18020

5. FURTHER CHECK IGNITION TIMING
Ignition timing: 0 – 10˚ BTDC @ idle (Transmission in neutral position)

HINT:

The timing mark moves in a range between 0˚ and 10˚.

6. DISCONNECT TIMING LIGHT FROM ENGINE

7. DISCONNECT TOYOTA HAND–HELD TESTER OR OBDII SCAN TOOL

IDLE SPEED

EM081–05

INSPECTION

1. INITIAL CONDITIONS

(a) Engine at normal operating temperature
(b) Air cleaner installed
(c) All pipes and hoses of air induction system connected
(d) All vacuum lines properly connected
(e) SFI system wiring connectors fully plugged
(f) All operating accessories switched OFF
(g) Ignition timing check correctly
(h) Transmission in neutral position
(i) Air conditioning switched OFF

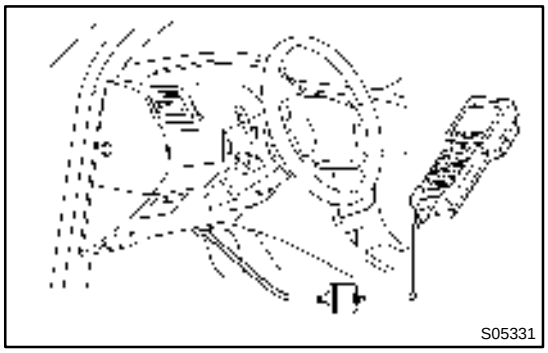
S05331

2. CONNECT TOYOTA HAND–HELD TESTER OR OBDII SCAN TOOL

(a) Remove the fuse cover on the instrument panel.
(b) Connect a TOYOTA hand–held tester or OBDII scan tool to the DLC3.
(c) Please refer to the TOYOTA hand–held tester or OBDII scan tool operator's manual for further details.

3. INSPECT IDLE SPEED

(a) Race the engine at 2,500 rpm for approx. 90 seconds.
(b) Check the idle speed.

Idle speed (w/ Cooling fan OFF): 700 ± 50 rpm

If the idle speed is not as specified, check the IAC valve and air intake system.

4. DISCONNECT TOYOTA HAND–HELD TESTER OR OBDII SCAN TOOL

BALANCE SHAFT BACKLASH

EM082–04

ON–VEHICLE INSPECTION

1. REMOVE OIL PAN AND OIL STRAINER
(See page LU–7)

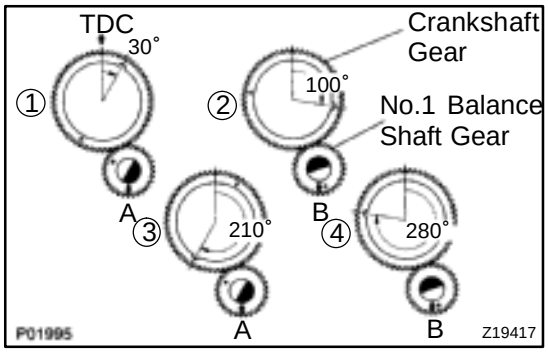

2. INSPECT BACKLASH OF CRANKSHAFT GEAR AND NO.1 BALANCE SHAFT GEAR

NOTICE:

Backlash between the crankshaft gear and No.1 balance shaft gear varies with the rotation of the balance shaft and the deviation of the crankshaft gear. Accordingly, it is necessary to measure the backlash at the 4 points shown in the illustration on the left.

(a) Turn the crankshaft 2 or 3 times to settle the crankshaft gear and No.1 balance shaft gear.

(b) When No.1 piston is at TDC, check that the punch marks C shown in the illustration of the balance shafts are aligned with the grooves of the No.2 housing.

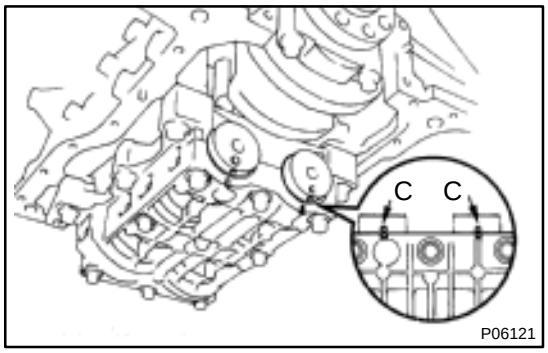

(c) Check that punch marks A and B are at the positions on the No.1 balance shaft indicated in the illustration.

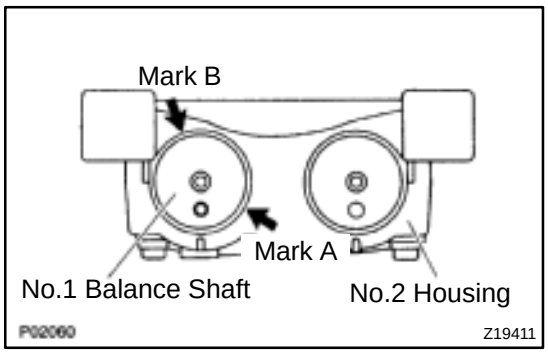

(d) First turn the crankshaft clockwise, and align the groove of the No.2 balance shaft housing with punch mark A of the No.1 balance shaft.

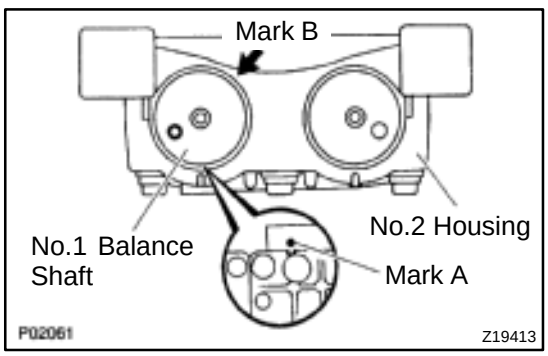

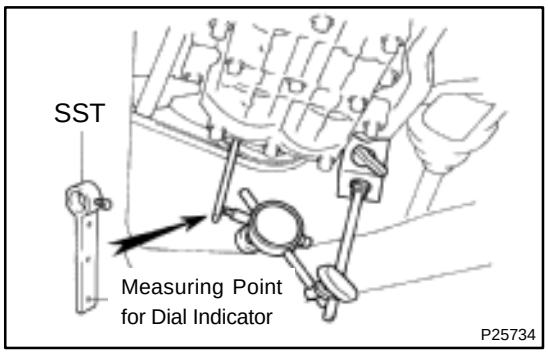

(e) Set SST and a dial indicator as shown in the illustration.
SST 09224–74010

HINT:

Make sure that the stem of the dial indicator is perpendicular to the SST and that it is placed in the middle of the 3rd indentation.

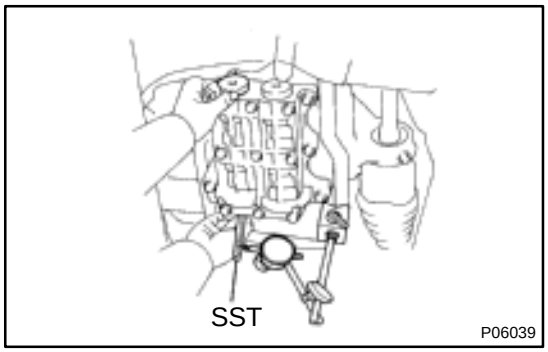

(f) Lightly turn the No.1 balance shaft by hand until resistance is felt, and measure the backlash.

HINT:

Turn the No.1 balance shaft 4 or 5 times to provide a steady backlash reading.

To prevent excessive backlash due to thrust clearance, measure the backlash while pressing on the rear of the No.1 balance shaft.

Standard backlash (at punch mark A):
0.025 – 0.065 mm (0.0010 – 0.0026 in.)

NOTICE:

Do not turn the No.1 balance shaft strongly.

(g) Remove the dial indicator and SST.

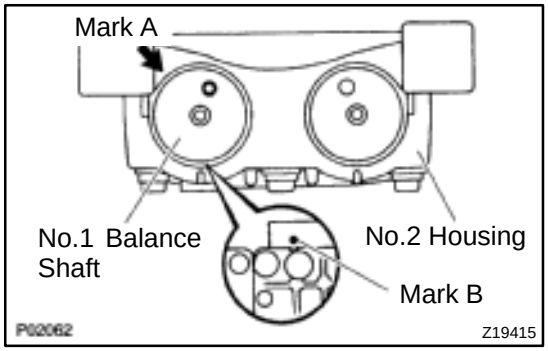

(h) Turn the crankshaft clockwise to align the groove of the No.2 housing with punch mark B.

(i) Set the dial indicator. (See step (e))

(j) Measure the backlash. (See step (f))

Standard backlash (at punch mark B):
0.025 – 0.085 mm (0.0010 – 0.0033 in.)

(k) Remove the dial indicator.

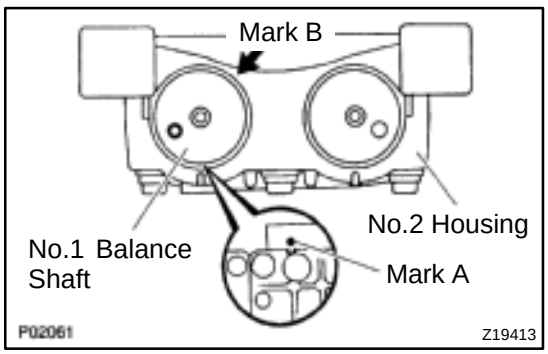

(l) Turn the crankshaft clockwise again to align the groove of the No.2 housing with punch mark A.

(m) Set the dial indicator. (See step (e))

(n) Measure the backlash. (See step (f))

Standard backlash (at punch mark A):
0.025 – 0.065 mm (0.0010 – 0.0026 in.)

(o) Remove the dial indicator.

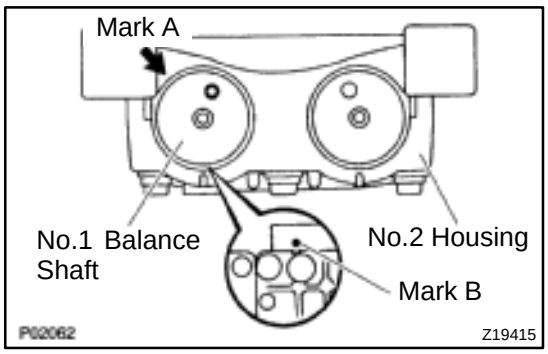

(p) Turn the crankshaft clockwise again to align the groove of the No.2 housing with punch mark B.
(q) Set the dial indicator. (See step (e))
(r) Measure the backlash. (See step (f))
Standard backlash (at punch mark B):
0.025 – 0.085 mm (0.0010 – 0.0033 in.)
(s) Remove the dial indicator.

If even one of the 4 points measured above exceeds the backlash specification, adjust the backlash with new spacers.

NOTICE:

Use the same size spacers for both the left and right sides.

HINT:

Varying the spacer thickness by 0.02 mm (0.0008 in.) changes the backlash by about 0.014 mm (0.0006 in.).

If the backlash is greater than the permitted maximum, select a thinner shim.

If the backlash is less than the specification, select a thicker shim.

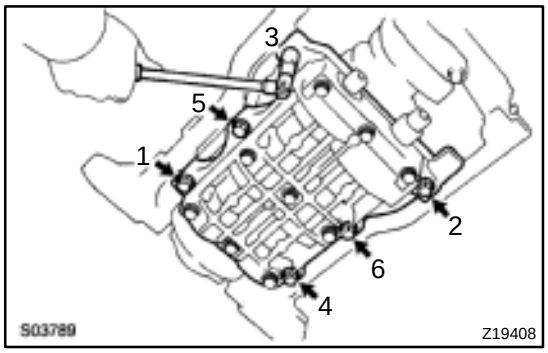

3. REPLACE NEW SPACERS

(a) Uniformly loosen the 6 bolts in the sequence shown.
(b) Replace the spacers with new ones.

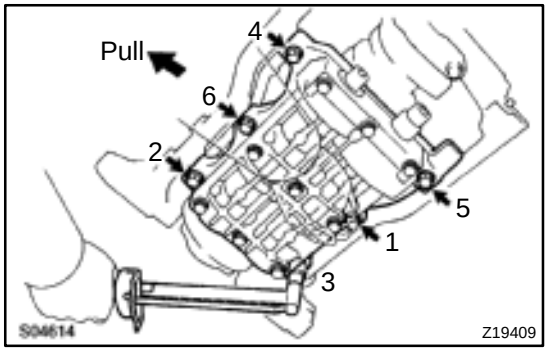

4. TIGHTEN BALANCE SHAFT ASSEMBLY

While pulling the center part of the engine balancer in the direction of the arrow, uniformly tighten the 6 bolts in several passes, in the sequence shown.

Torque: 49 N·m (500 kgf·cm, 36 ft·lbf)

5. INSPECT AND ADJUST BACKLASH OF CRANKSHAFT GEAR AND NO.1 BALANCE SHAFT GEAR (See step 2)

6. REINSTALL OIL STRAINER AND OIL PAN (See page LU–13)

Adjusting Spacer Selection Chart (On–Vehicle)

Measured backlash mm (in.) \ Installed spacer No.	01	02	03	04	05	06	07	08	09	10	11	12	13	14	15	16	17	18	19	20	21	22	23	24	25	26	27	28	29	30	31	32	33	34	35	36	37	38	39	40
0.000–0.008 (0.0000–0.0003)	07	07	09	09	11	11	13	13	15	15	17	17	19	19	21	21	23	23	25	25	27	27	29	29	31	31	33	33	35	35	37	37	39	39	39	39				
0.009–0.015 (0.0004–0.0006)	05	05	07	07	09	09	11	11	13	13	15	15	17	17	19	19	21	21	23	23	25	25	27	27	29	29	31	31	33	33	35	35	37	37	39	39	39			
0.016–0.024 (0.0006–0.0009)	03	05	05	07	07	09	09	11	11	13	13	15	15	17	17	19	19	21	21	23	23	25	25	27	27	29	29	31	31	33	33	35	35	37	37	39	39	39		
0.025–0.065 (0.0010–0.0026)																																								
0.066–0.071 (0.0026–0.0028)		01	01	01	01	01	03	03	05	05	07	07	09	09	11	11	13	13	15	15	17	17	19	19	21	21	23	23	25	25	27	27	29	29	31	31	33	33	35	35
0.072–0.078 (0.0028–0.0031)		01	01	01	01	01	01	03	03	05	05	07	07	09	09	11	11	13	13	15	15	17	17	19	19	21	21	23	23	25	25	27	27	29	29	31	31	33	33	35
0.079–0.085 (0.0031–0.0033)			01	01	01	01	01	01	03	03	05	05	07	07	09	09	11	11	13	13	15	15	17	17	19	19	21	21	23	23	25	25	27	27	29	29	31	31	33	33
0.086–0.092 (0.0034–0.0036)				01	01	01	01	01	03	03	05	05	07	07	09	09	11	11	13	13	15	15	17	17	19	19	21	21	23	23	25	25	27	27	29	29	31	31	33	33
0.093–0.099 (0.0032–0.0035)					01	01	01	01	01	01	03	03	05	05	07	07	09	09	11	11	13	13	15	15	17	17	19	19	21	21	23	23	25	25	27	27	29	29	31	31		
0.100–0.106 (0.0039–0.0042)						01	01	01	01	01	01	03	03	05	05	07	07	09	09	11	11	13	13	15	15	17	17	19	19	21	21	23	23	25	25	27	27	29	29	31		
0.107–0.113 (0.0042–0.0044)							01	01	01	01	01	03	03	05	05	07	07	09	09	11	11	13	13	15	15	17	17	19	19	21	21	23	23	25	25	27	27	29	29		
0.114–0.120 (0.0045–0.0047)								01	01	01	01	01	03	03	05	05	07	07	09	09	11	11	13	13	15	15	17	17	19	19	21	21	23	23	25	25	27	27	29		
0.121–0.127 (0.0048–0.0050)									01	01	01	01	01	03	03	05	05	07	07	09	09	11	11	13	13	15	15	17	17	19	19	21	21	23	23	25	25	27	27		
0.128–0.134 (0.0050–0.0053)										01	01	01	01	01	03	03	05	05	07	07	09	09	11	11	13	13	15	15	17	17	19	19	21	21	23	23	25	25	27		
0.135–0.141 (0.0053–0.0056)											01	01	01	01	01	03	03	05	05	07	07	09	09	11	11	13	13	15	15	17	17	19	19	21	21	23	23	25	25		
0.142–0.148 (0.0056–0.0058)												01	01	01	01	01	03	03	05	05	07	07	09	09	11	11	13	13	15	15	17	17	19	19	21	21	23	23	25		
0.149–0.155 (0.0059–0.0061)													01	01	01	01	01	01	03	03	05	05	07	07	09	09	11	11	13	13	15	15	17	17	19	19	21	21	23	23	
0.156–0.162 (0.0061–0.0064)														01	01	01	01	01	01	03	03	05	05	07	07	09	09	11	11	13	13	15	15	17	17	19	19	21	21	23	
0.163–0.169 (0.0064–0.0066)															01	01	01	01	01	01	03	03	05	05	07	07	09	09	11	11	13	13	15	15	17	17	19	19	21	21	
0.170–0.176 (0.0067–0.0069)																01	01	01	01	01	01	03	03	05	05	07	07	09	09	11	11	13	13	15	15	17	17	19	19	21	
0.177–0.183 (0.0070–0.0072)																	01	01	01	01	01	01	03	03	05	05	07	07	09	09	11	11	13	13	15	15	17	17	19	19	
0.184–0.190 (0.0072–0.0075)																		01	01	01	01	01	01	03	03	05	05	07	07	09	09	11	11	13	13	15	15	17	17	19	
0.191–0.197 (0.0075–0.0078)																			01	01	01	01	01	01	03	03	05	05	07	07	09	09	11	11	13	13	15	15	17	17	
0.198–0.204 (0.0078–0.0080)																				01	01	01	01	01	01	03	03	05	05	07	07	09	09	11	11	13	13	15	15	17	
0.205–0.211 (0.0081–0.0083)																					01	01	01	01	01	01	03	03	05	05	07	07	09	09	11	11	13	13	15	15	
0.212–0.218 (0.0083–0.0086)																						01	01	01	01	01	01	03	03	05	05	07	07	09	09	11	11	13	13	15	
0.219–0.225 (0.0086–0.0089)																							01	01	01	01	01	01	03	03	05	05	07	07	09	09	11	11	13	13	
0.226–0.232 (0.0089–0.0091)																								01	01	01	01	01	01	03	03	05	05	07	07	09	09	11	11	13	
0.233–0.239 (0.0092–0.0094)																									01	01	01	01	01	03	03	05	05	07	07	09	09	11	11		
0.240–0.246 (0.0094–0.0097)																										01	01	01	01	01	03	03	05	05	07	07	09	09	11		
0.247–0.253 (0.0097–0.0100)																											01	01	01	01	01	03	03	05	05	07	07	09	09		
0.254–0.260 (0.0100–0.0102)																												01	01	01	01	03	03	05	05	07	07	09		
0.261–0.267 (0.0103–0.0105)																													01	01	01	01	03	03	05	05	07	07		
0.268–0.274 (0.0106–0.0108)																														01	01	01	01	01	03	03	05	05	07	
0.275–0.281 (0.0108–0.0111)																															01	01	01	01	01	01	03	03	05	05
0.282–0.288 (0.0111–0.0113)																																01	01	01	01	01	01	03	03	05
0.289–0.295 (0.0114–0.0116)																																	01	01	01	01	01	01	03	03
0.296–0.302 (0.0117–0.0119)																																		01	01	01	01	01	01	03
0.303–0.309 (0.0120–0.0122)																																			01	01	01	01	01	01
0.310–0.316 (0.0122–0.0124)																																				01	01	01	01	01
0.317–0.323 (0.0125–0.0127)																																					01	01	01	01
0.324–0.330 (0.0128–0.0130)																																						01	01	01
0.331–0.338 (0.0130–0.0133)																																							01	01

Standard backlash (at punch mark A):
0.025 – 0.065 mm (0.0010 – 0.0026 in.)

EXAMPLE: The No.25 spacers are installed,
and the measured backlash is 0.110 mm (0.0043 in.).
Replace the No.25 spacers with new No.15 spacers.

New spacer thickness mm (in.)

No.	Thickness	No.	Thickness	No.	Thickness	No.	Thickness
01	1.74 (0.0685)	11	1.84 (0.0724)	21	1.94 (0.0764)	31	2.04 (0.0803)
03	1.76 (0.0693)	13	1.86 (0.0732)	23	1.96 (0.0772)	33	2.06 (0.0811)
05	1.78 (0.0701)	15	1.88 (0.0740)	25	1.98 (0.0780)	35	2.08 (0.0819)
07	1.80 (0.0709)	17	1.90 (0.0748)	27	2.00 (0.0787)	37	2.10 (0.0827)
09	1.82 (0.0717)	19	1.92 (0.0756)	29	2.02 (0.0795)	39	2.12 (0.0835)

A01918

TIMING BELT

COMPONENTS

EM083–03

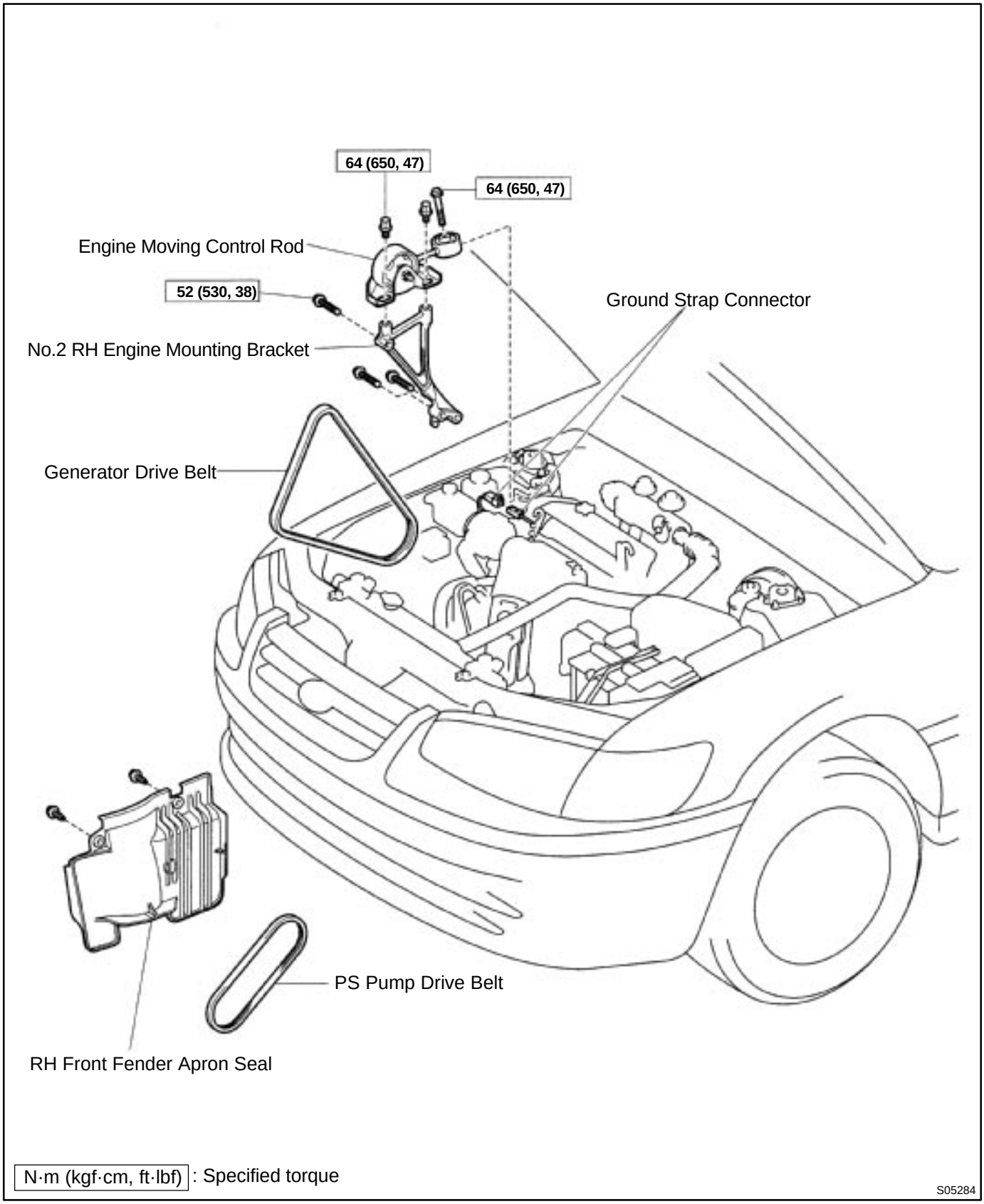

N·m (kgf·cm, ft·lbf) : Specified torque

S05284

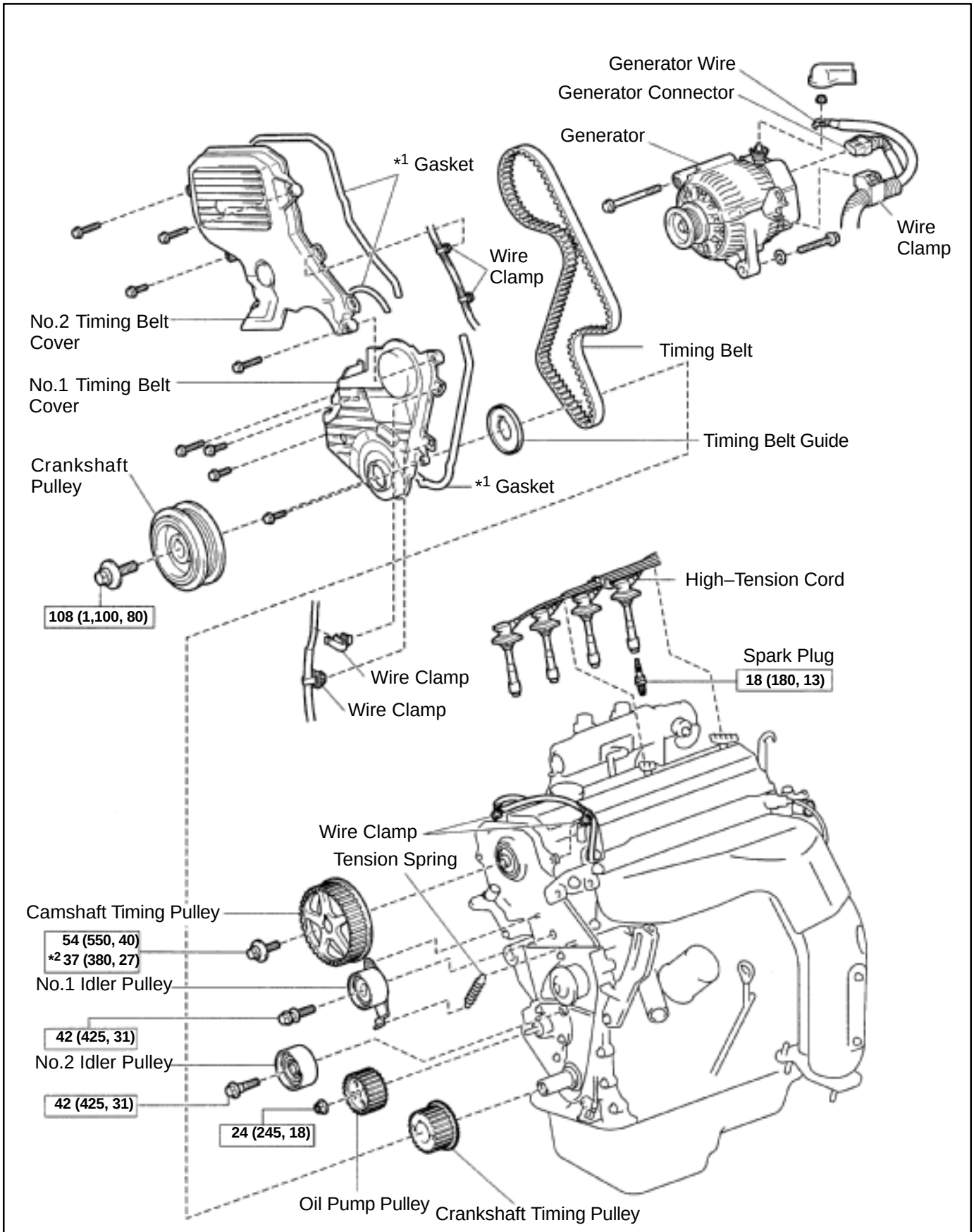

N·m (kgf·cm, ft·lbf) : Specified torque
*1 Replace only if damaged
*2 For use with SST

S05937

EM084–04

REMOVAL

1. REMOVE GENERATOR (See page CH–6)

2. REMOVE RH FRONT WHEEL

3. REMOVE RH FRONT FENDER APRON SEAL

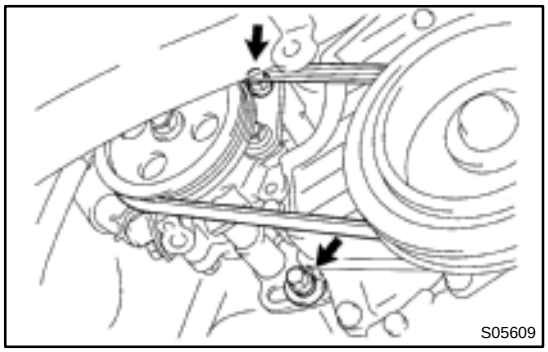

4. REMOVE PS PUMP DRIVE BELT

Loosen the 2 bolts, and remove the drive belt.

5. DISCONNECT GROUND STRAP CONNECTOR

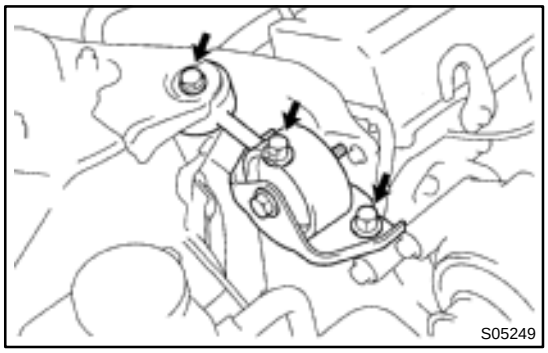

6. REMOVE ENGINE MOVING CONTROL ROD

Remove the 3 bolts and control rod.

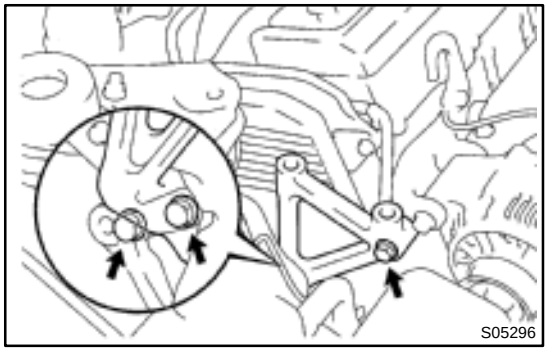

7. REMOVE NO.2 RH ENGINE MOUNTING BRACKET

Remove the 3 bolts and mounting bracket.

8. REMOVE SPARK PLUGS

(a) Disconnect the 4 high–tension cords from the clamps on the cylinder head cover.

(b) Disconnect the 4 high–tension cords from the spark plug.

(c) Remove the 4 spark plugs.

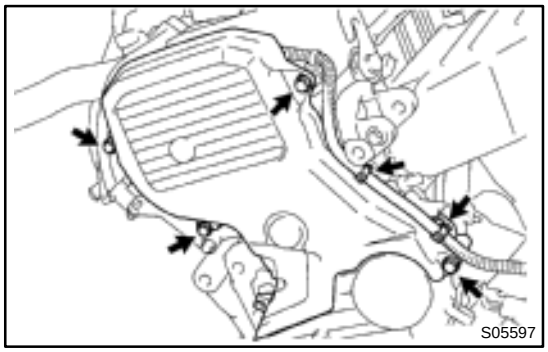

9. REMOVE NO.2 TIMING BELT COVER

(a) Disconnect the 2 engine wire clamps from the timing belt cover.

(b) Remove the 4 bolts and timing belt cover.

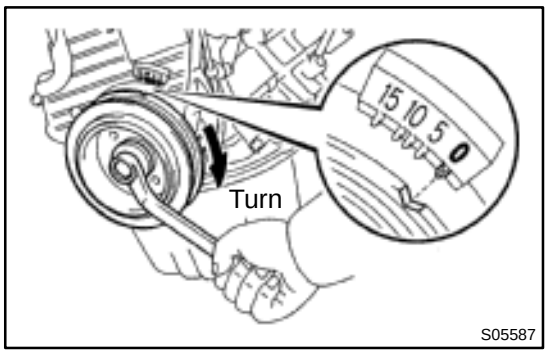

10. SET NO.1 CYLINDER TO TDC/COMPRESSION

(a) Turn the crankshaft pulley, and align its groove with timing mark ”0” of the No.1 timing belt cover.

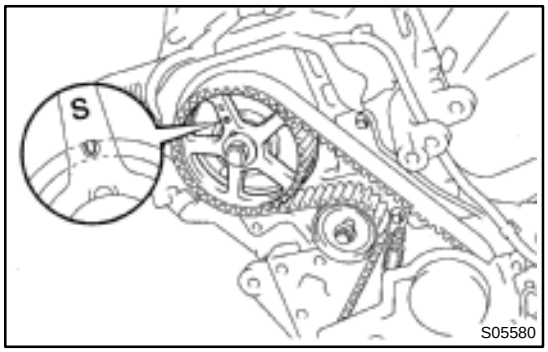

(b) Check that the hole of the camshaft timing pulley is aligned with the timing mark of the bearing cap.

If not, turn the crankshaft 1 revolution (360˚).

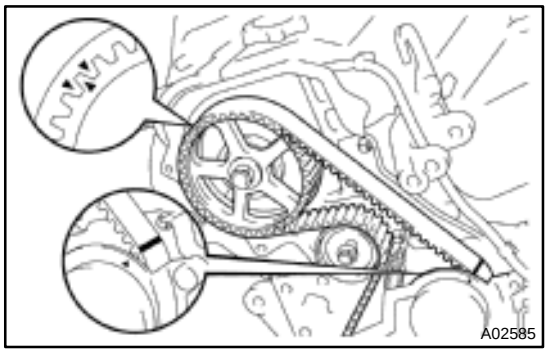

11. REMOVE TIMING BELT FROM CAMSHAFT TIMING PULLEY

HINT:

When re–using timing belt:

Affix the matching marks on the timing belt and the camshaft timing pulley, and the timing belt and the No. 1 timing belt cover.

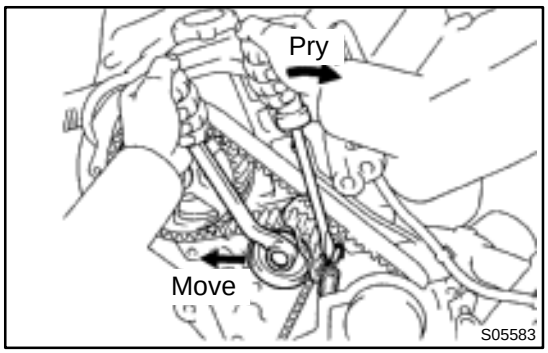

(a) Loosen the mounting bolt of the No.1 idler pulley, and shift the pulley toward the left as far as it will go, and temporarily tighten it.

(b) Remove the timing belt from the camshaft timing pulley.



12. REMOVE CAMSHAFT TIMING PULLEY

(a) Using SST, loosen the pulley bolt.

SST 09249–63010, 09960–10010 (09962–01000, 09963–01000)

(b) Remove the bolt and timing pulley.

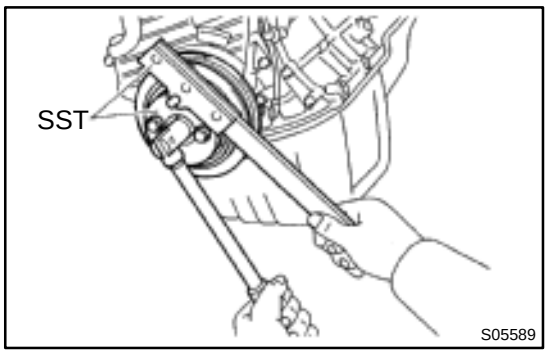

13. REMOVE CRANKSHAFT PULLEY

(a) Using SST (and bolt), loosen the pulley bolt.
SST 09213–54015 (91651–60855), 09330–00021

HINT:

Either of 2 types of pulley may be used, each with its own bolt size, type A (91651–60885) and type B (part No. 91121–40665).

When using bolt type B, a plate washer must be inserted between the bolt and SST.

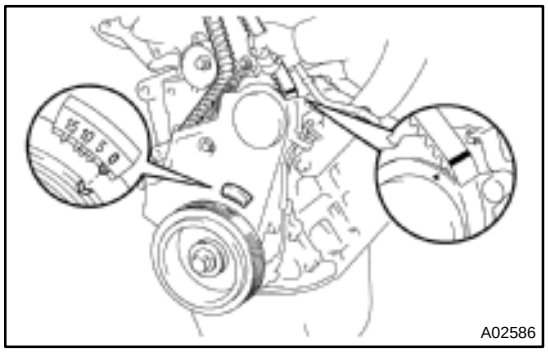

HINT:

When re–using timing belt:

After loosing the crankshaft pulley bolt and matching the ditch of the crankshaft pulley with the ”0” of the timing mark of No.1 timing belt cover, check that matching mark meets.

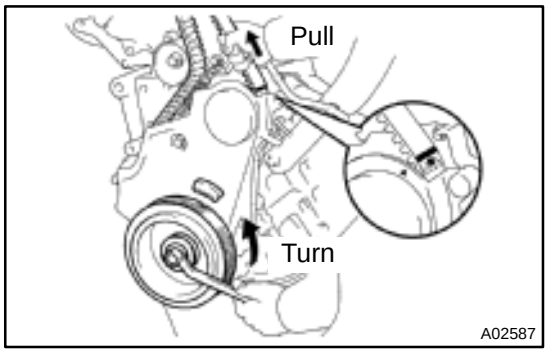

When matchmark is misaligned clockwise:

If the matchmark does not align, align as follows:

(1) Align the matchmark by pulling the timing belt up on the water pump pulley side while turning the crankshaft pulley counterclockwise.

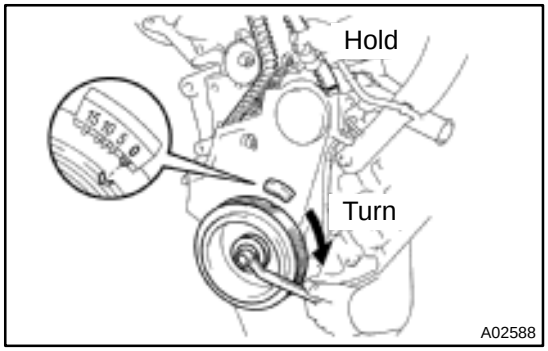

(2) After aligning the matchmark, hold the timing belt. And turn the crankshaft pulley clockwise, and align its groove with timing mark ”0” of the No.1 timing belt cover.

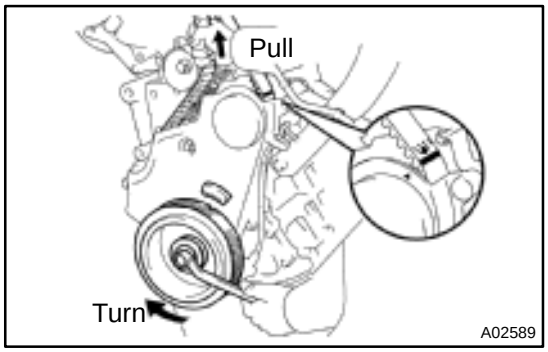

When matchmark is misaligned counterclockwise:

If the matchmark does not align, align as follows:

(1) Align the matchmark by pulling the timing belt up on the No.1 idler pulley side while turning the crankshaft pulley clockwise.

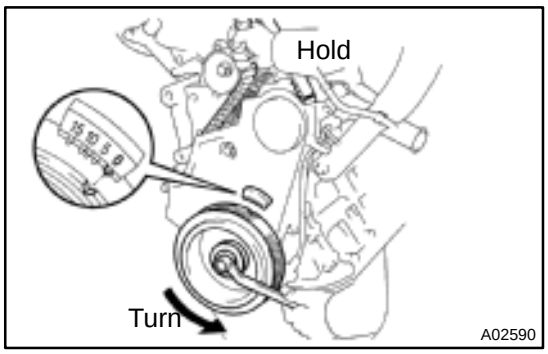

(2) After aligning the matchmark, hold the timing belt. And turn the crankshaft pulley counterclockwise, and align its groove with timing mark ”0” of the No.1 timing belt cover.

(b) Remove the pulley bolt.

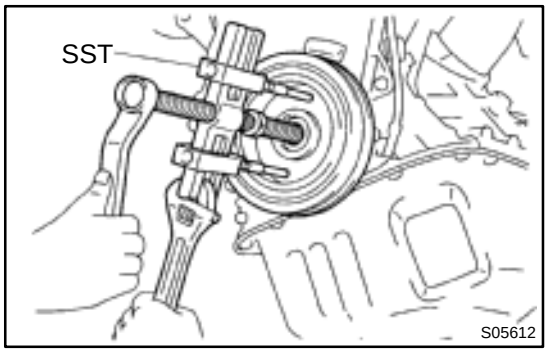

(c) Using SST, remove the pulley.

SST 09950–50012 (09951–05010, 09952–05010, 09953–05010, 09953–05020, 09954–05020, 09954–05010)

HINT:

Either of 2 types of pulley may be used, each with its own bolt size, type A(09954–05020) and type B (09954–05010).

When re–using timing belt:

Remove the pulley without turning it.

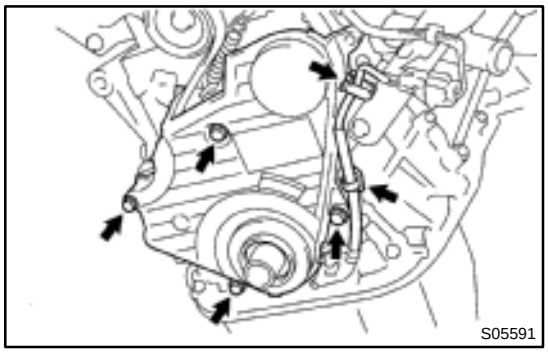

14. REMOVE NO.1 TIMING BELT COVER

(a) Disconnect the crankshaft position sensor wire from the clamp on the timing belt cover.

(b) Disconnect the clamp of the crankshaft position sensor wire from the timing belt cover.

(c) Remove the 4 bolts and timing belt cover.

15. REMOVE TIMING BELT GUIDE

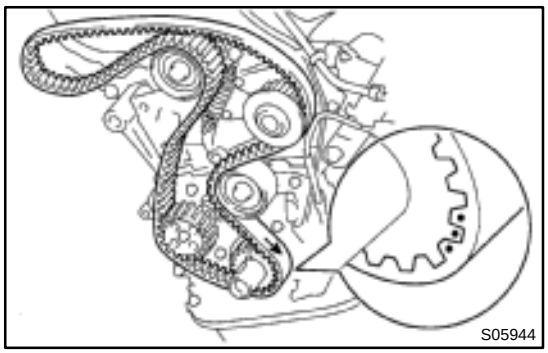

16. REMOVE TIMING BELT

HINT:

When re–using timing belt:

Draw a direction arrow on the timing belt (in the direction of engine revolution), and place matchmarks on the timing belt and crankshaft timing pulley.

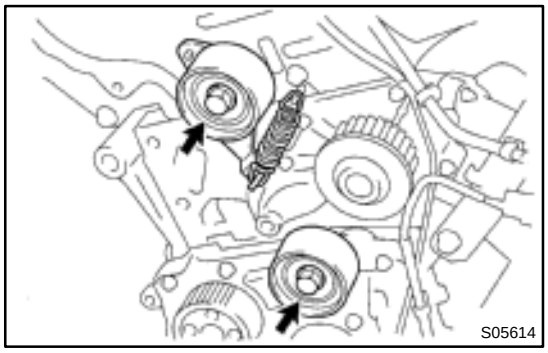

17. REMOVE NO.1 IDLER PULLEY AND TENSION SPRING

Remove the bolt, pulley and tension spring.

18. REMOVE NO.2 IDLER PULLEY

Remove the bolt and pulley.

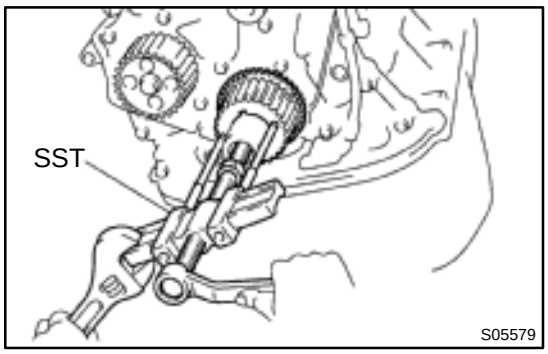

19. REMOVE CRANKSHAFT TIMING PULLEY

If the pulley cannot be removed by hand, use SST to remove the timing pulley.

SST 09950–50012 (09951–05010, 09952–05010, 09953–05010, 09953–05020, 09954–05010)

NOTICE:

Do not scratch the angle sensor of the timing pulley.

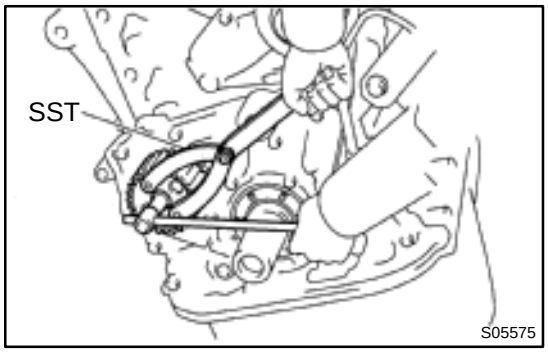

20. REMOVE OIL PUMP PULLEY

(a) Using SST, loosen the pulley nut.

SST 09960–10010 (09962–01000, 09963–00500)

(b) Remove the nut and pulley.

EM085–03

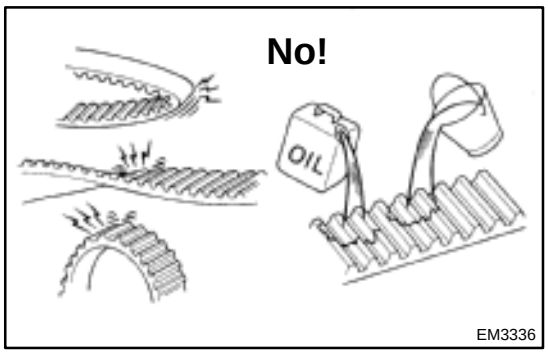

INSPECTION

1. INSPECT TIMING BELT

NOTICE:

Do not bend, twist or turn the timing belt inside out.
Do not allow the timing belt to come into contact with oil, water or steam.
Do not utilize timing belt tension when installing or removing the mounting bolt of the camshaft timing pulley.

If there are any defects as shown in the illustration, check these points:

(a) Premature parting
Check for proper installation.
Check the timing cover gasket for damage and proper installation.

(b) If the belt teeth are cracked or damaged, check to see if either camshaft or water pump is locked.

(c) If there is noticeable wear or cracks on the belt face, check to see if there are nicks on the side of the idler pulley lock.

(d) If there is wear or damage on only one side of the belt, check the belt guide and the alignment of each pulley.

(e) If there is noticeable wear on the belt teeth, check the timing cover for damage and check gasket has been installed correctly and for foreign material on the pulley teeth.

If necessary, replace the timing belt.

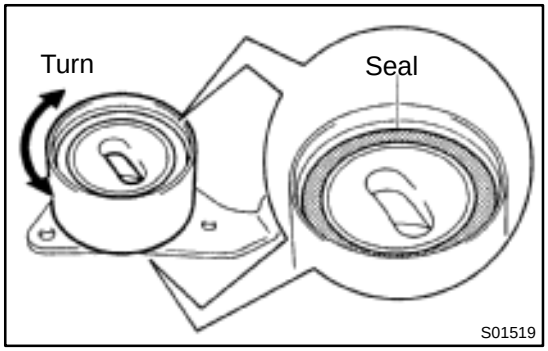

2. INSPECT IDLER PULLEYS

(a) Visually check the seal portion of the idler pulley for oil leakage.

If leakage is found, replace the idler pulley.

(b) Check that the idler pulley turns smoothly.

If necessary, replace the idler pulley.

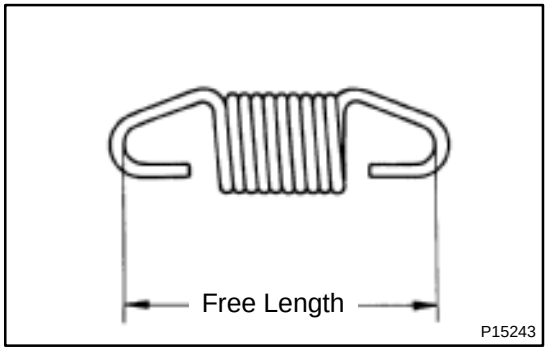

3. INSPECT TENSION SPRING

(a) Measure the free length of tension spring.
Free length: 42.0 mm (1.654 in.)

If the free length is not as specified, replace the tension spring.

(b) Measure the tension of the tension spring at the specified installed length.
Installed tension (at 50.5 mm (1.988 in.)):
32 – 37 N (3.25 – 3.75 kgf, 7.2 – 8.3 lbf)

If the installed tension is not as specified, replace the tension spring.

EM086–04

INSTALLATION

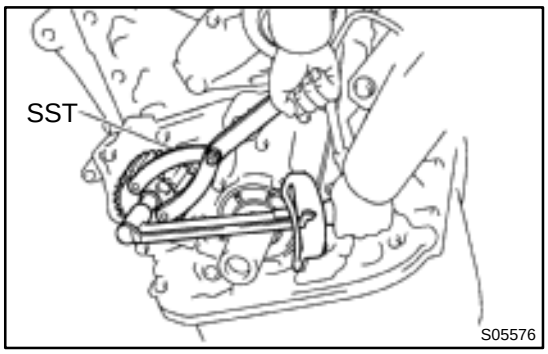

1. INSTALL OIL PUMP PULLEY

(a) Align the cutouts of the pulley and shaft, and slide on the pulley.

(b) Using SST, install the pulley nut.
SST 09960–10010 (09962–01000, 09963–00500)
Torque: 24 N·m (245 kgf·cm, 18 ft·lbf)

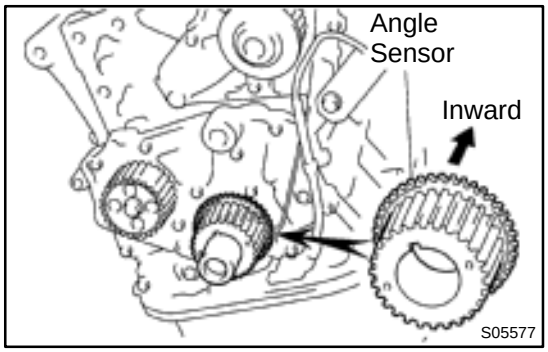

2. INSTALL CRANKSHAFT TIMING PULLEY

(a) Align the timing pulley set key with the key groove of the pulley.

(b) Slide on the timing pulley, facing the angle sensor inward.

NOTICE:
Do not scratch the angle sensor of the timing pulley.

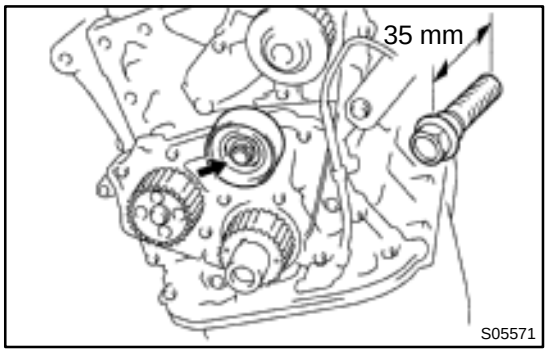

3. INSTALL NO.2 IDLER PULLEY

(a) Install the pulley with the bolt.
Torque: 42 N·m (425 kgf·cm, 31 ft·lbf)

HINT:
Use the 35 mm (1.38 in.) long bolt.

(b) Check that the idler pulley moves smoothly.

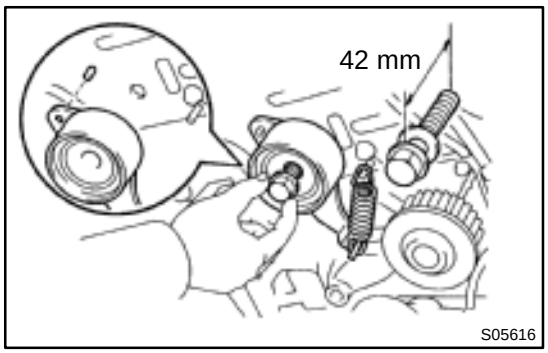

4. TEMPORARILY INSTALL NO.1 IDLER PULLEY AND TENSION SPRING

(a) Align the bracket pin hole with the pivot pin.

(b) Install the pulley with the bolt. Do not tighten the bolt yet.

HINT:
Use the 42 mm (1.65 in.) long bolt.

(c) Install the tension spring.

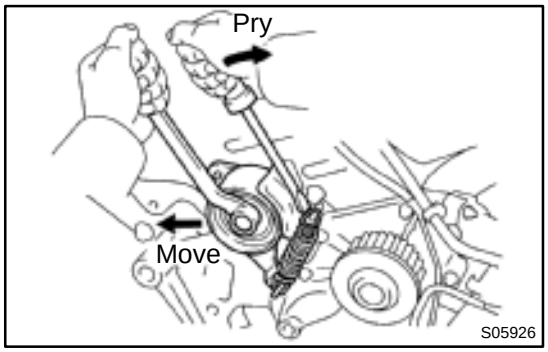

(d) Pry the pulley toward the left as far as it will go, and tighten the bolt.

(e) Check that the idler pulley moves smoothly.

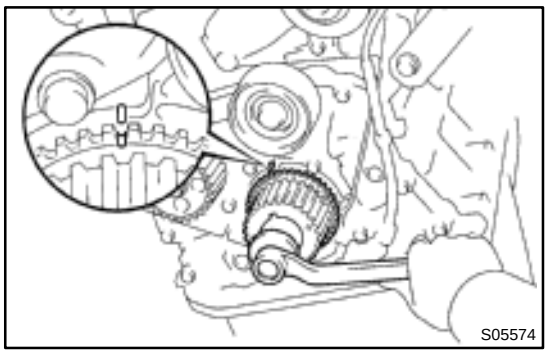

5. TEMPORARILY INSTALL TIMING BELT

NOTICE:

The engine should be cold.

(a) Using the crankshaft pulley bolt, turn the crankshaft and align the timing marks of the crankshaft timing pulley and oil pump body.

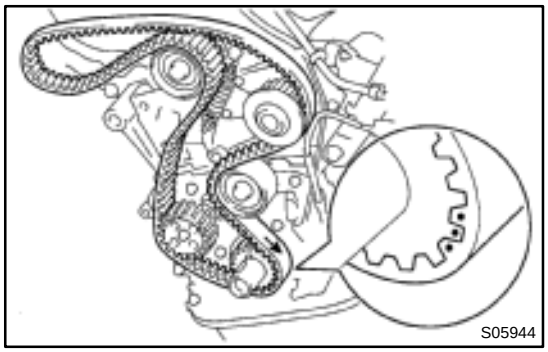

(b) Remove any oil or water on the crankshaft pulley, oil pump pulley, water pump pulley, No.1 idler pulley and No.2 idler pulley, and keep them clean.

(c) Install the timing belt on the crankshaft timing pulley, oil pump pulley, No.1 idler pulley, water pump pulley and No.2 idler pulley.

HINT:

When re–using timing belt:

Align the points marked during removal, and install the belt with the arrow pointing in the direction of engine revolution.

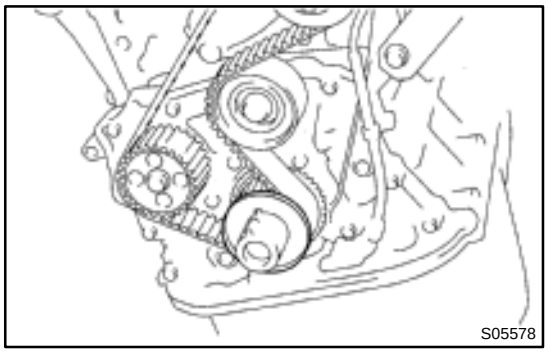

6. INSTALL TIMING BELT GUIDE

Install the guide, facing the cup side outward.

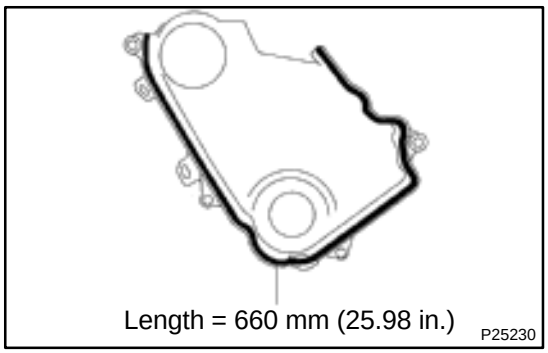

7. INSTALL NO.1 TIMING BELT COVER

(a) Check that the timing belt cover gasket has no cracks or peeling, etc.

If the gasket has cracks or peeling, etc., replace it using these steps:

(1) Using a screwdriver and gasket scraper, remove all the old gasket material.

(2) Thoroughly clean all components to remove all the loose material.

(3) Remove the backing paper from a new gasket and install the gasket evenly to the part of the timing belt cover shaded black in the illustration.

(4) After installing the gasket, press down on it so that the adhesive firmly sticks to the timing belt cover.

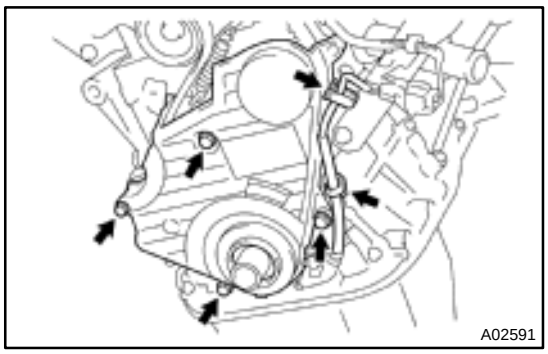

(b) Install the timing belt cover with the 4 bolts.
(c) Install the clamp of the crankshaft position sensor wire to the timing belt cover.
(d) Install the crankshaft position sensor wire to the clamp on the timing belt cover.

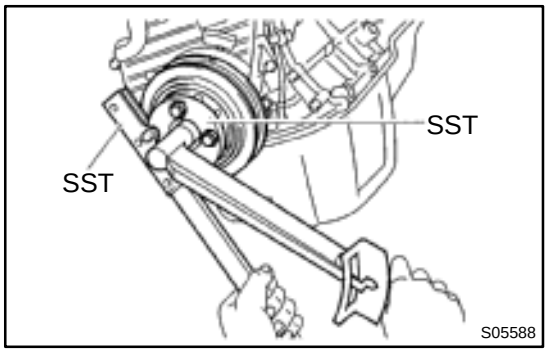

8. INSTALL CRANKSHAFT PULLEY

(a) Align the pulley set key with the key groove of the pulley, and slide on the pulley.
(b) Using SST (and bolt), install the pulley bolt.
SST 09213–54015 (91651–60855),09330–00021
Torque: 108 N·m (1,100 kgf·cm, 80 ft·lbf)

HINT:
Either of 2 types of pulley may be used, each with its own bolt size, type A (91651–60855) and type B (part No. 91121–40665).

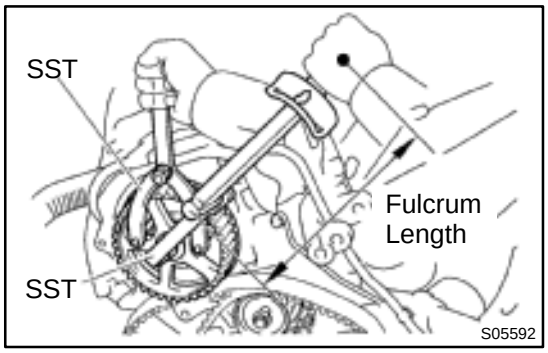

9. INSTALL CAMSHAFT TIMING PULLEY

(a) Align the camshaft knock pin with the knock pin groove of the pulley, and slide on the timing pulley.
(b) Using SST, install the pulley bolt.
SST 09249–63010, 09960–10010 (09962–01000, 09963–01000)
Torque:
54 N·m (550 kgf·cm, 40 ft·lbf)
37 N·m (380 kgf·cm, 27 ft·lbf) for use with SST

HINT:
Use a torque wrench with a fulcrum length of 340 mm (13.39 in.).

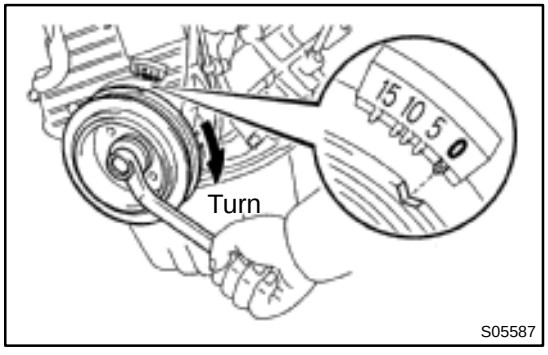

10. SET NO.1 CYLINDER TO TDC/COMPRESSION

(a) Turn the crankshaft pulley, and align its groove with timing mark ”0” of the No.1 timing belt cover.

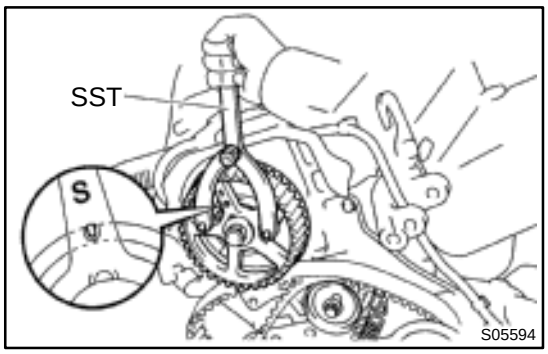

(b) Using SST, turn the camshaft, and align the hole of the camshaft timing pulley with the timing mark of the bearing cap.
SST 09960–10010 (09962–01000, 09963–01000)

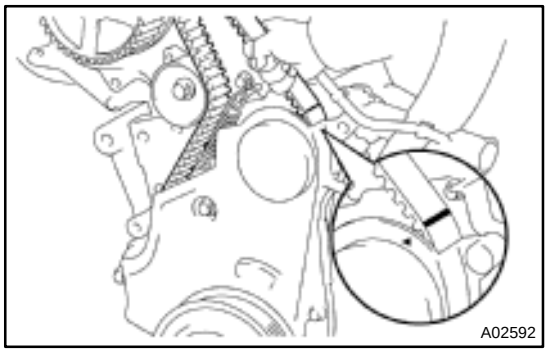

11. CONNECT TIMING BELT TO CAMSHAFT TIMING PULLEY

HINT:

When re–using timing belt:
Check that the matching marks of the timing belt and the No.1 timing belt cover meet.

If the matchmark does not align, shift the meshing of the timing belt and crankshaft timing pulley until they align.
(See page EM–17)

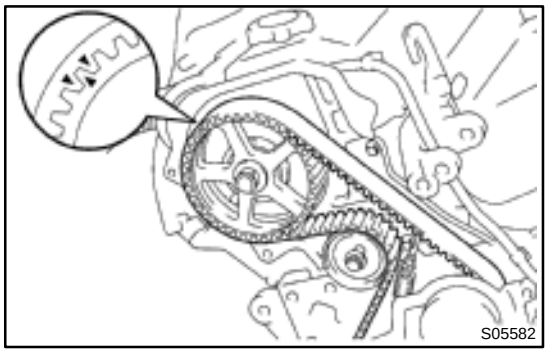

When re–using timing belt:
Align the matchmarks of the timing belt and camshaft timing pulley.

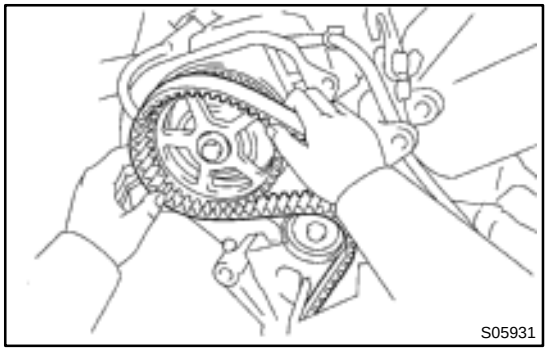

(a) Remove any oil or water on the camshaft timing pulley, and keep it clean.
(b) Connect the timing belt to the camshaft timing pulley, and checking the tension between the crankshaft timing pulley and camshaft timing pulley.

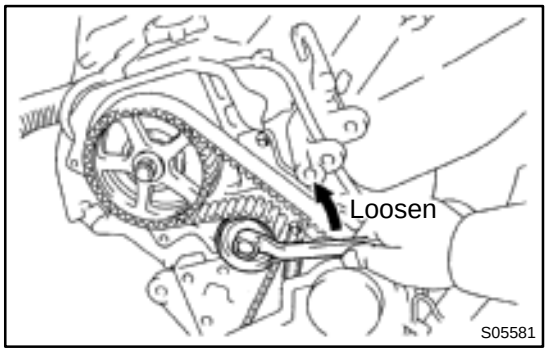

12. CHECK VALVE TIMING

(a) Loosen the No.1 idler pulley bolt 1/2 turn.

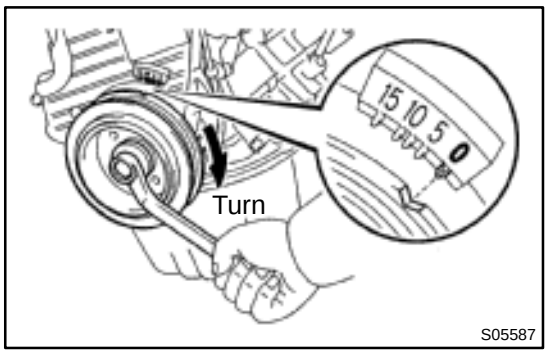

(b) Slowly turn the crankshaft pulley 2 revolutions TDC to TDC.

NOTICE:

Always turn the crankshaft pulley clockwise.

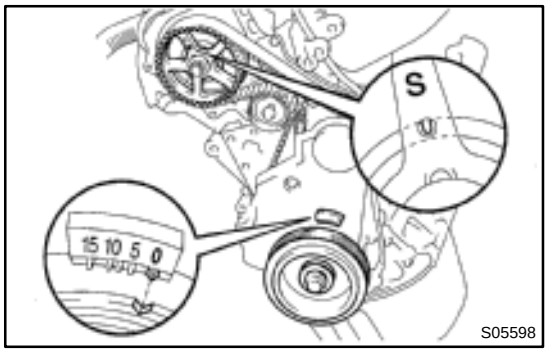

(c) Check that each pulley aligns with the timing marks as shown in the illustration.

If the timing marks do not align, remove the timing belt and reinstall it.

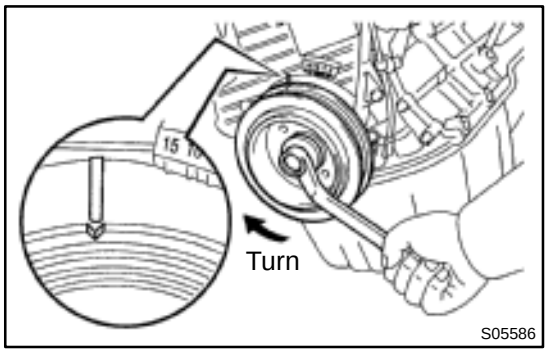

(d) Slowly turn the crankshaft pulley 1 and 7/8 revolutions, and align its groove with the mark at 45° BTDC (for No.1 cylinder) of the No.1 timing belt cover.

NOTICE:

Always turn the crankshaft pulley clockwise.

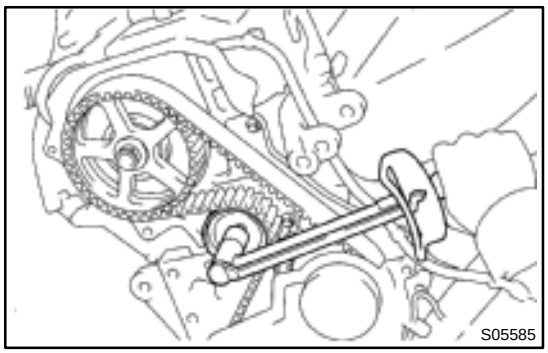

(e) Tighten the mounting bolt of the No.1 idler pulley.
Torque: 42 N·m (425 kgf·cm, 31 ft·lbf)

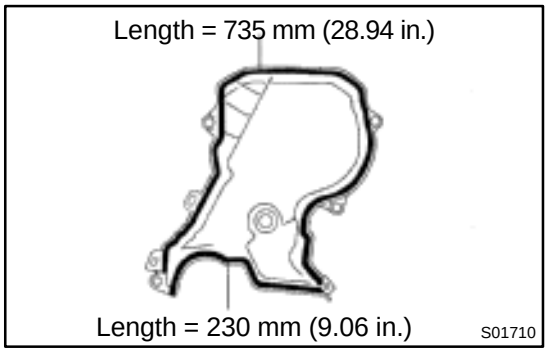

13. INSTALL NO.2 TIMING BELT COVER

(a) Check that the timing belt cover gaskets have no cracks or peeling, etc.

If the gasket has cracks or peeling, etc., replace it using these steps:

(1) Using a screwdriver and gasket scraper, remove all the old gasket material.

(2) Thoroughly clean all components to remove all the loose material.

(3) Remove the backing paper from a new gasket and install the gasket evenly to the part of the timing belt cover shaded black in the illustration.
(4) After installing the gasket, press down on it so that the adhesive firmly sticks to the timing belt cover.

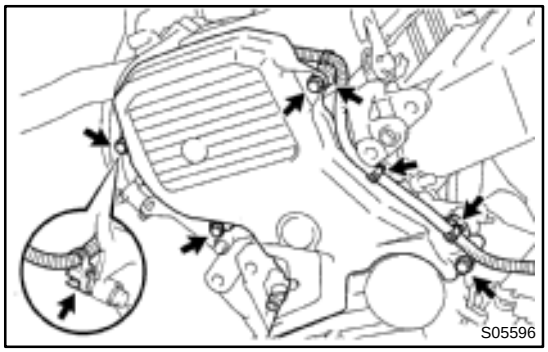

(b) Install the belt cover with the 4 bolts.
(c) Install the engine wire clamp.

14. INSTALL SPARK PLUGS

(a) Install the 4 spark plugs.
(b) Connect the 4 high–tension cords to the spark plugs.
(c) Install the 4 high–tension cords to the clamps on the cylinder head cover.

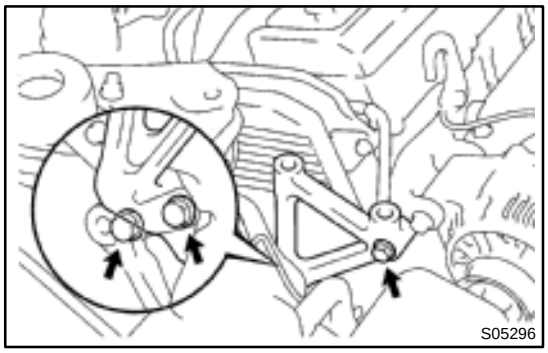

15. INSTALL NO.2 RH ENGINE MOUNTING BRACKET

(a) Install the mounting bracket with the 3 bolts.
(b) Alternately tighten the 3 bolts in several passes.
Torque: 52 N·m (530 kgf·cm, 38 ft·lbf)

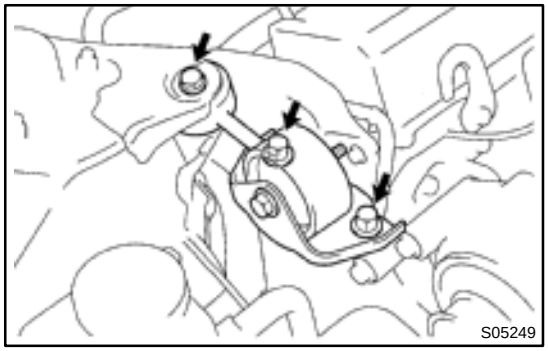

16. INSTALL ENGINE MOVING CONTROL ROD

(a) Temporarily install the control rod with the 3 bolt.
(b) Alternately tighten the 3 bolts in several passes.
Torque: 64 N·m (650 kgf·cm, 47 ft·lbf)

17. CONNECT GROUND STRAP CONNECTOR

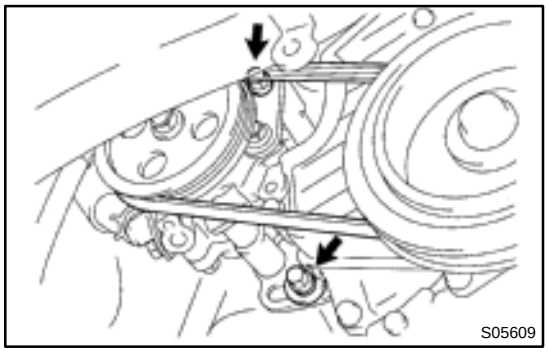

18. INSTALL PS PUMP DRIVE BELT

Install the drive belt with the 2 bolts.

19. INSTALL RH FRONT FENDER APRON SEAL

20. INSTALL RH FRONT WHEEL

21. INSTALL GENERATOR (See page CH–16)

♡▲★″□●©® ■©◀●

EM087–03

COMPONENTS

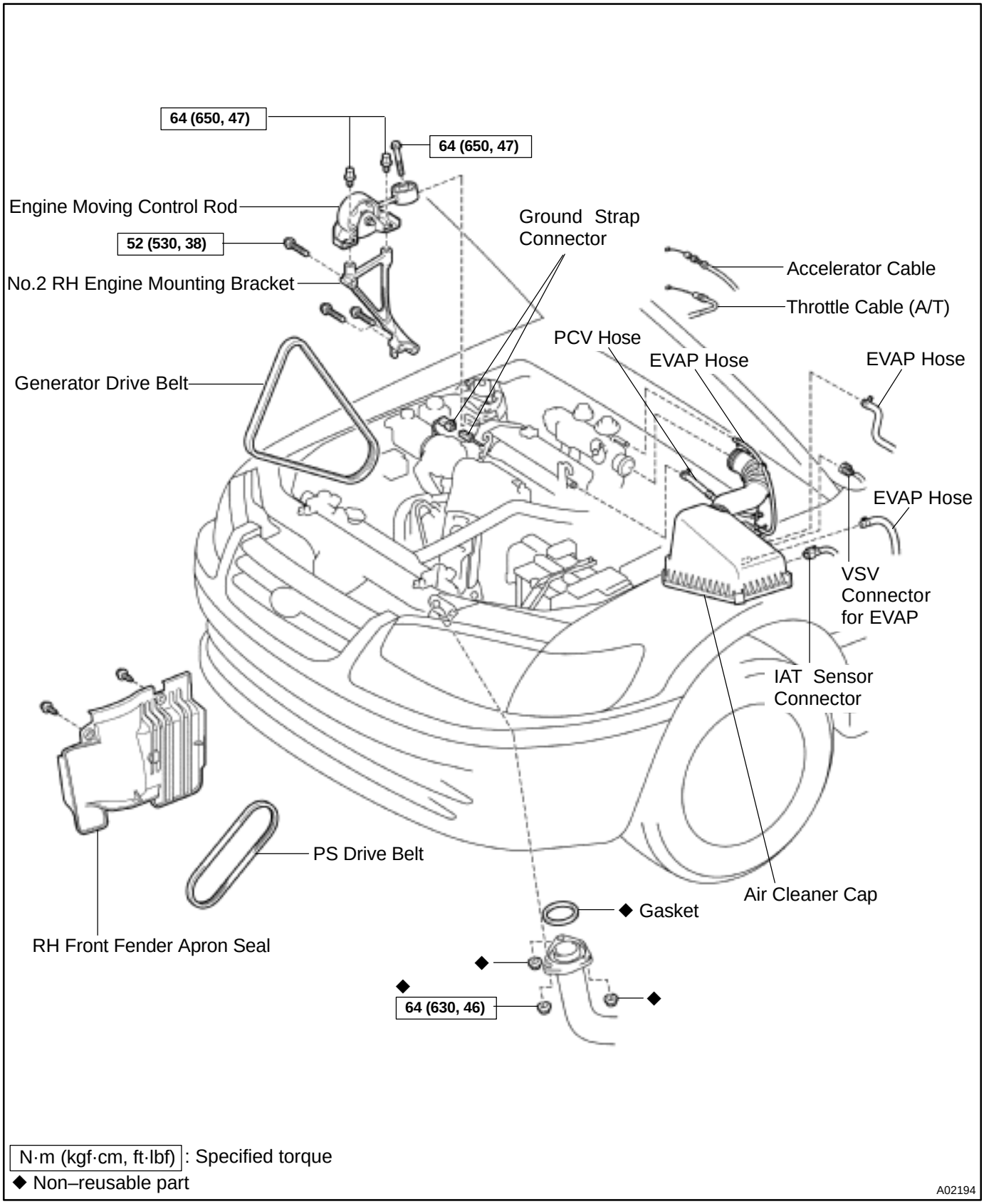

N·m (kgf·cm, ft·lbf) : Specified torque
◆ Non–reusable part

A02194

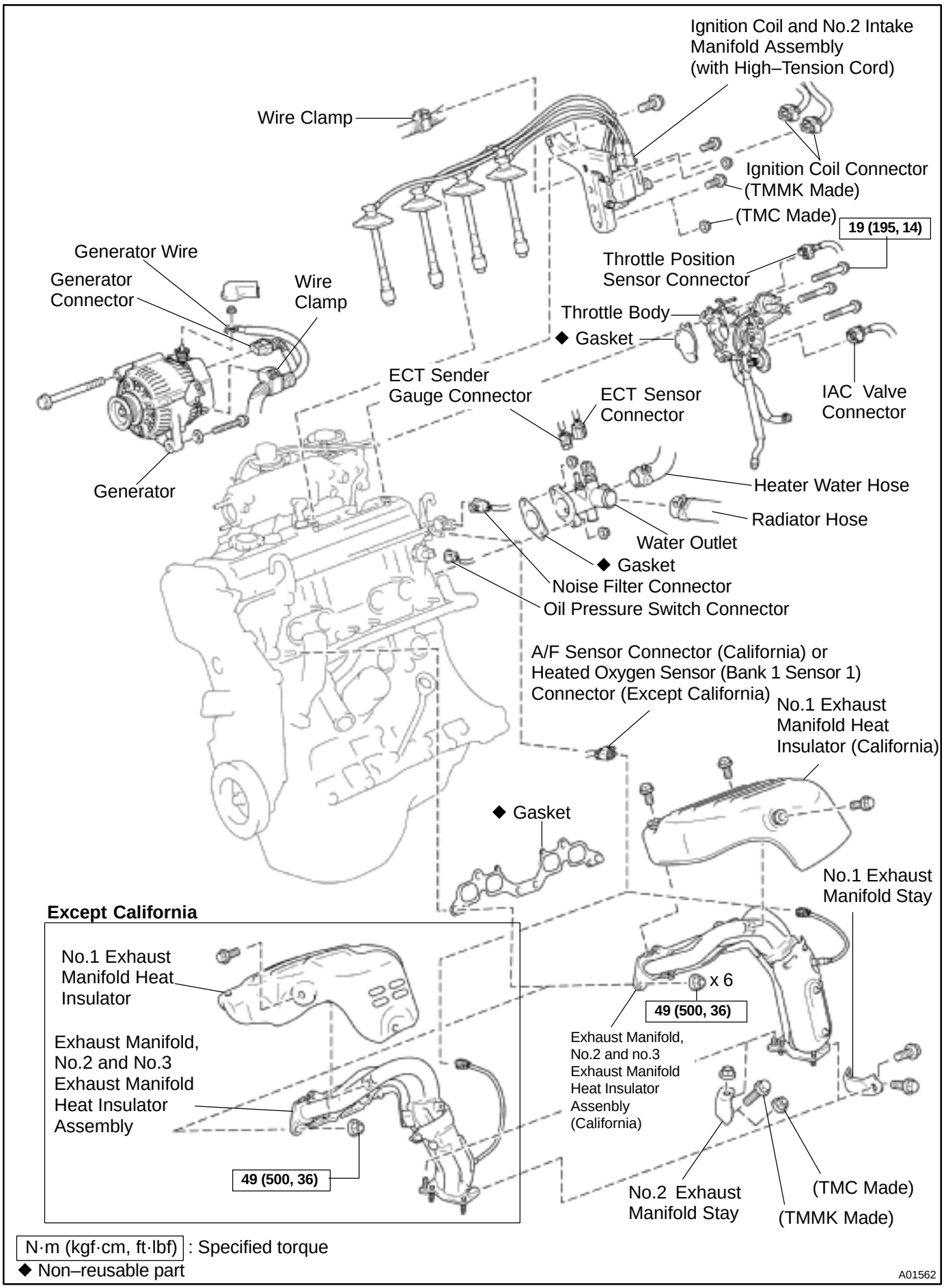
Ignition Coil and No.2 Intake Manifold Assembly (with High–Tension Cord)
Wire Clamp
Ignition Coil Connector
(TMMK Made)
(TMC Made)
19 (195, 14)
Generator Wire
Generator Connector
Wire Clamp
Throttle Position Sensor Connector
Throttle Body
◆ Gasket
ECT Sender Gauge Connector
ECT Sensor Connector
IAC Valve Connector
Generator
Heater Water Hose
Radiator Hose
Water Outlet
◆ Gasket
Noise Filter Connector
Oil Pressure Switch Connector
A/F Sensor Connector (California) or Heated Oxygen Sensor (Bank 1 Sensor 1) Connector (Except California)
No.1 Exhaust Manifold Heat Insulator (California)
◆ Gasket
No.1 Exhaust Manifold Stay
Except California
No.1 Exhaust Manifold Heat Insulator
x 6
49 (500, 36)
Exhaust Manifold, No.2 and no.3 Exhaust Manifold Heat Insulator Assembly (California)
Exhaust Manifold, No.2 and No.3 Exhaust Manifold Heat Insulator Assembly
49 (500, 36)
No.2 Exhaust Manifold Stay
(TMC Made)
(TMMK Made)
N·m (kgf·cm, ft·lbf) : Specified torque
◆ Non–reusable part
A01562

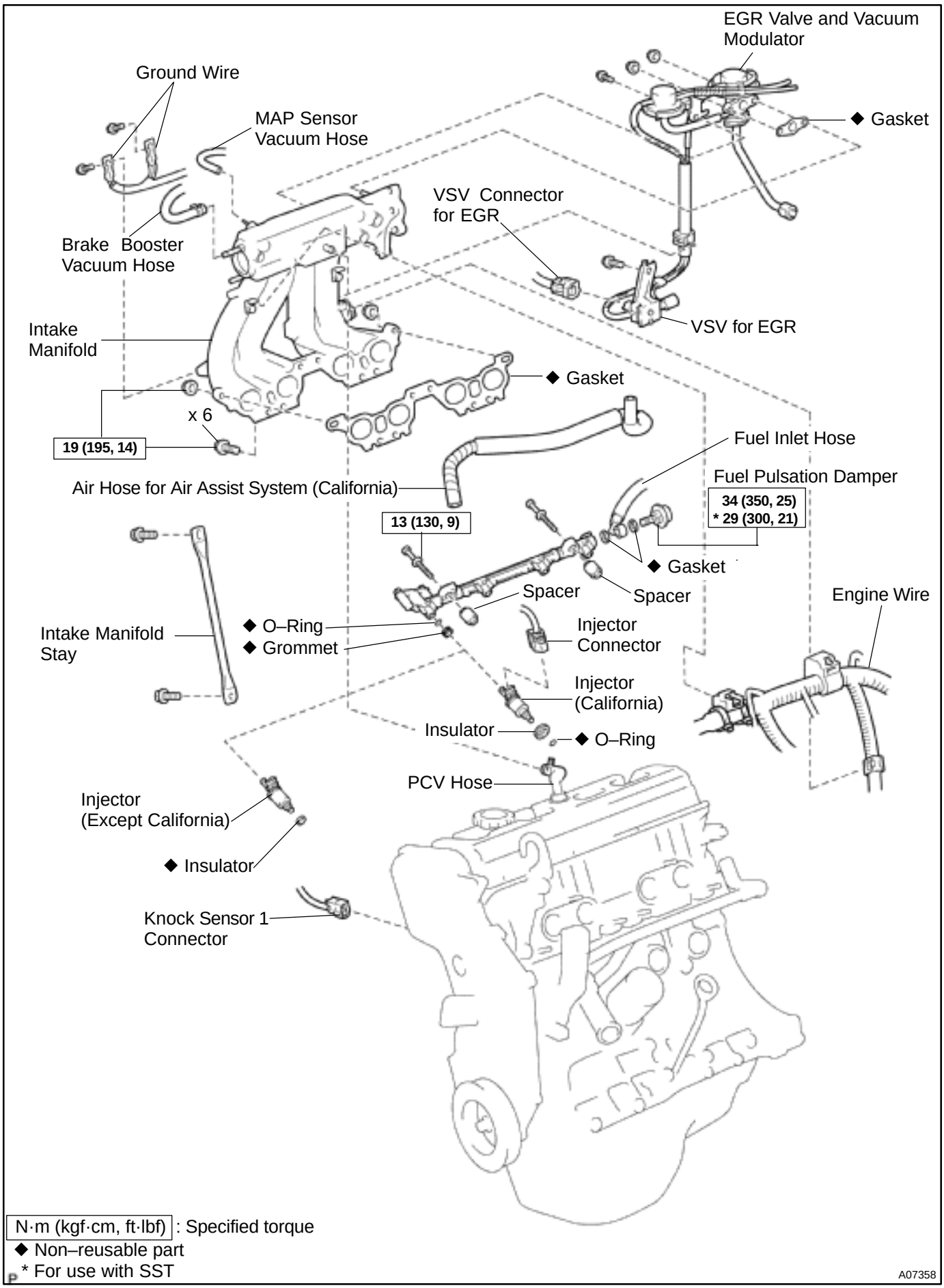
EGR Valve and Vacuum Modulator
Ground Wire
MAP Sensor Vacuum Hose
◆ Gasket
VSV Connector for EGR
Brake Booster Vacuum Hose
VSV for EGR
Intake Manifold
◆ Gasket
x 6
19 (195, 14)
Fuel Inlet Hose
Fuel Pulsation Damper
Air Hose for Air Assist System (California)
34 (350, 25)
* 29 (300, 21)
13 (130, 9)
◆ Gasket
Spacer
Spacer
Engine Wire
Intake Manifold Stay
◆ O–Ring
◆ Grommet
Injector Connector
Injector (California)
Insulator
◆ O–Ring
PCV Hose
Injector (Except California)
◆ Insulator
Knock Sensor 1 Connector
N·m (kgf·cm, ft·lbf) : Specified torque
◆ Non–reusable part
* For use with SST
A07358

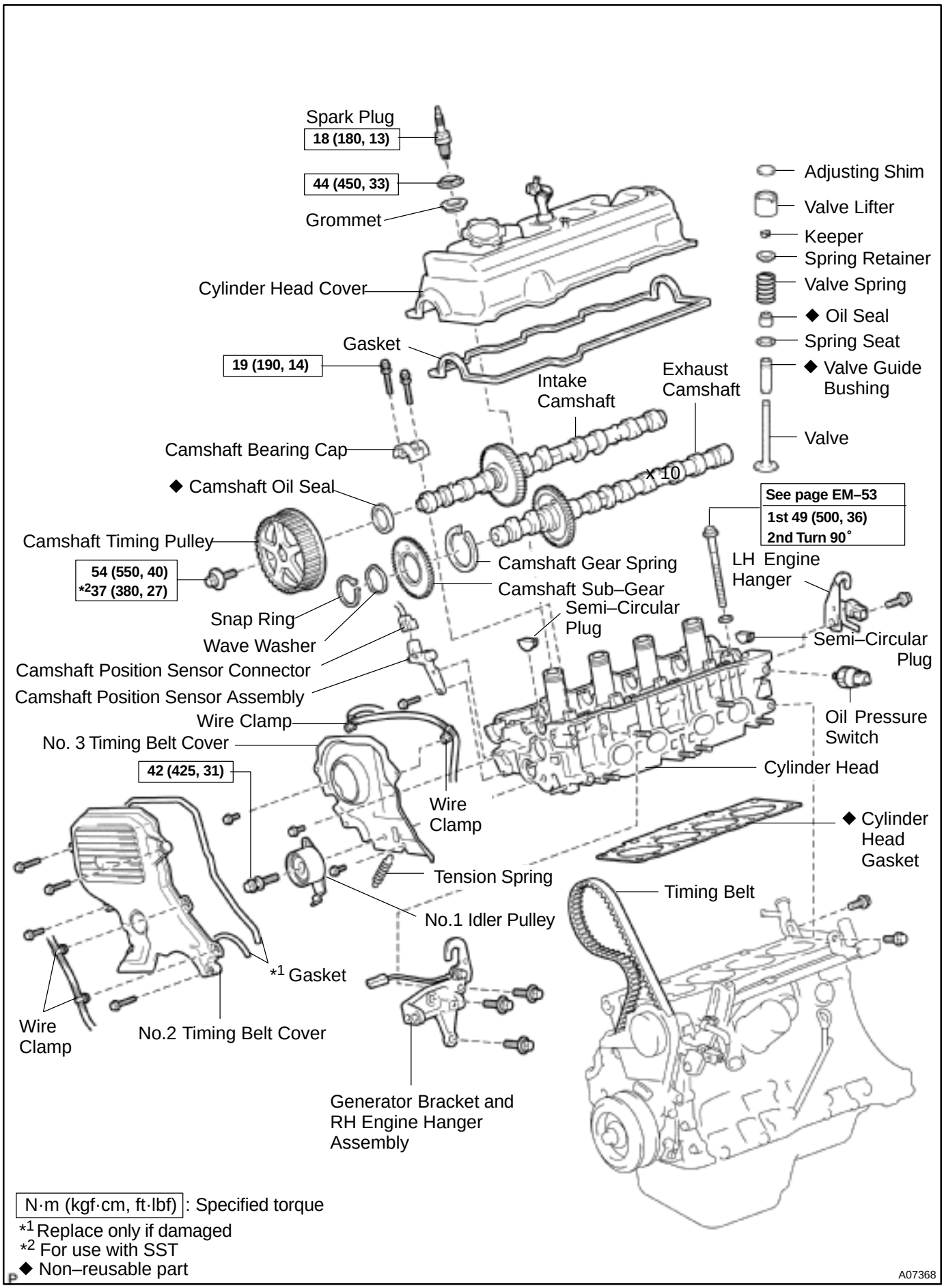

N·m (kgf·cm, ft·lbf) : Specified torque
*1 Replace only if damaged
*2 For use with SST
◆ Non–reusable part

A07368

EM0YL–01

REMOVAL

1. DRAIN ENGINE COOLANT

2. REMOVE AIR CLEANER CAP (See page EM–69)

3. REMOVE GENERATOR (See page CH–6)

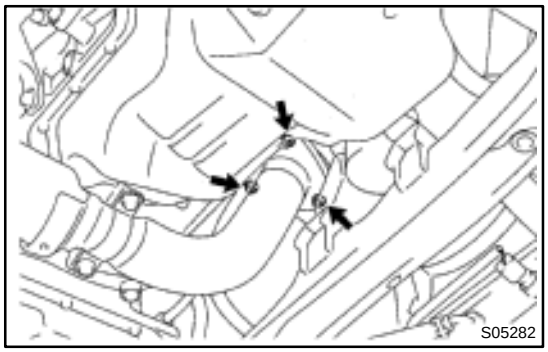

4. REMOVE EXHAUST MANIFOLD

(a) Remove the 3 nuts holding the front exhaust pipe to the exhaust manifold.

(b) Remove the 3 (California) or 5 (Except California) bolts and No.1 exhaust manifold heat insulator.

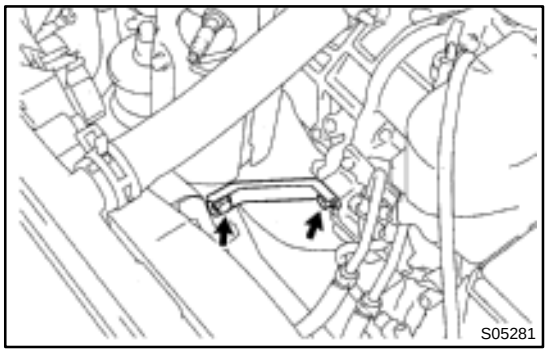

(c) Remove the 2 bolts and No.1 exhaust manifold stay.

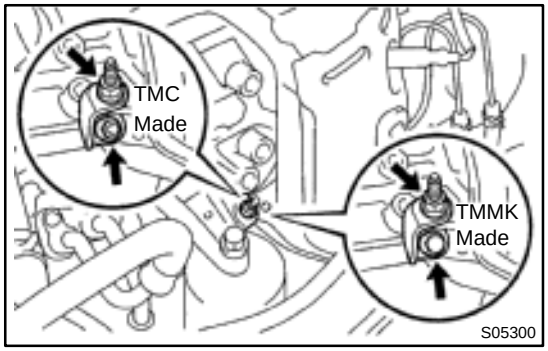

(d) TMC Made:
Remove the 2 nuts and No.2 exhaust manifold stay.

(e) TMMK Made:
Remove the bolt, nut and No.2 exhaust manifold stay.

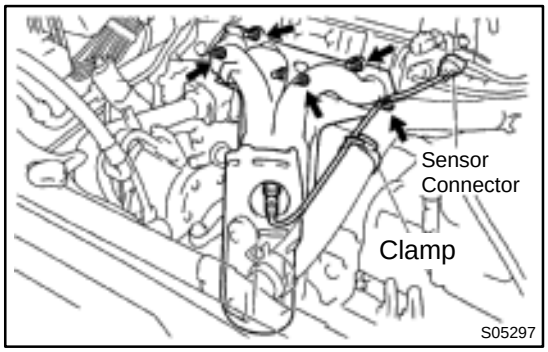

(f) Remove the wire clamp.

(g) California:
Disconnect the A/F sensor connector.

(h) Except California:
Disconnect the oxygen sensor (bank 1 sensor 1) connector.

(i) Remove the 6 nuts, the exhaust manifold, No.2 and No.3 exhaust manifold heat insulators assembly.

(j) California:
Disconnect the A/F sensor connector for the wiring side from the bracket on the LH engine hanger.
(k) Except California:
Disconnect the heated oxygen sensor (bank 1 sensor 1) connector for the wiring side from the bracket on the LH engine hanger.

5. REMOVE THROTTLE BODY (See page SF–32)

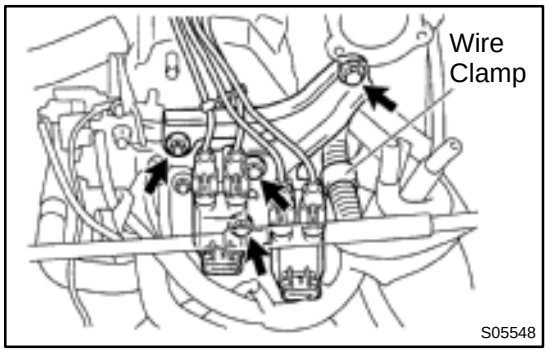

6. REMOVE IGNITION COILS, NO.2 INTAKE MANIFOLD STAY AND HIGH–TENSION CORDS ASSEMBLY
(a) Disconnect the 2 ignition coil connectors.
(b) Disconnect the 4 high–tension cords from the 2 clamps on the cylinder head cover.
(c) Disconnect the 4 high–tension cords from the spark plugs.
(d) Disconnect the wire clamp from the manifold stay.
(e) TMC Made:
Remove the 2 nuts, 2 bolts, 2 ignition coils, manifold stay and 4 high–tension cords assembly.
(f) TMMK Made:
Remove the nut, 3 bolts, 2 ignition coils, manifold stay and 4 high–tension cords assembly.

7. DISCONNECT OIL PRESSURE SWITCH CONNECTOR
8. DISCONNECT NOISE FILTER CONNECTOR

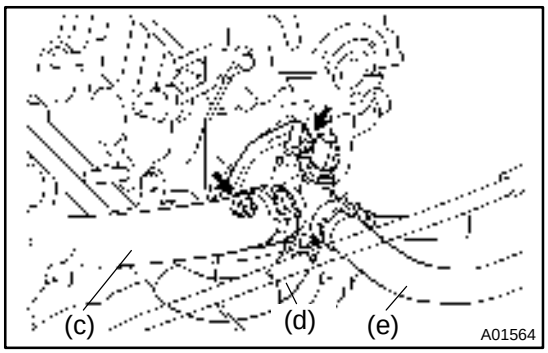

9. REMOVE WATER OUTLET
(a) Disconnect the ECT sensor connector.
(b) Disconnect the ECT sender gauge connector.
(c) Disconnect the radiator hose from the water outlet.
(d) Disconnect the water bypass pipe hose from the water outlet.
(e) Disconnect the heater water hose from the water outlet.
(f) Remove the 2 nuts, water outlet and gasket.

10. REMOVE INTAKE MANIFOLD STAY
Remove the bolt, nut and intake manifold stay.

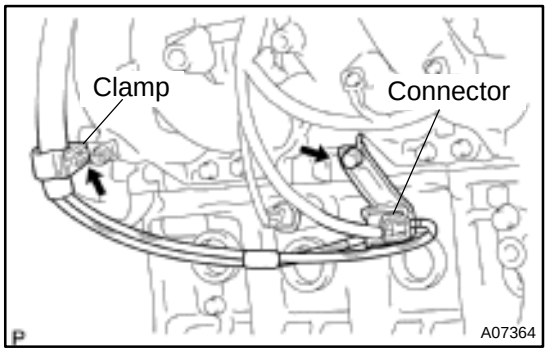

11. REMOVE EGR VALVE AND VACUUM MODULATOR
(a) Disconnect the VSV connector for the EGR.
(b) Disconnect the hose clamp from the bracket on the intake manifold.
(c) Remove the bolt, and disconnect the VSV for EGR from the intake manifold.

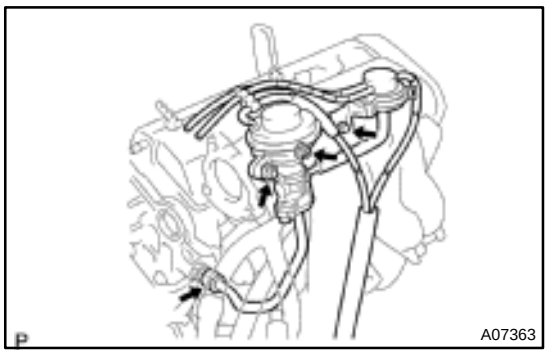

(d) Loosen the union nut of the EGR pipe, and remove the bolt, 2 nuts, the EGR valve, vacuum modulator, vacuum hoses assembly and gasket.

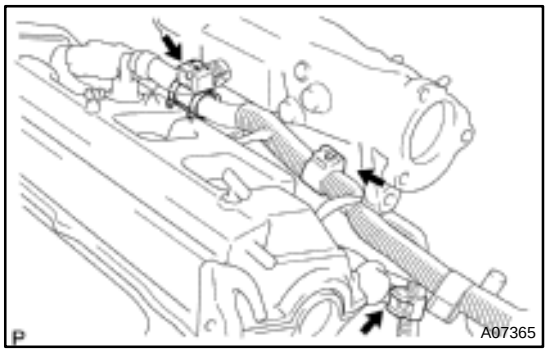

12. DISCONNECT ENGINE WIRE FROM INTAKE MANIFOLD

(a) Disconnect the engine wire clamp from the bracket on the LH side of the intake manifold.

(b) Disconnect the 2 engine wire clamps from the 2 brackets on the front side of the intake manifold.

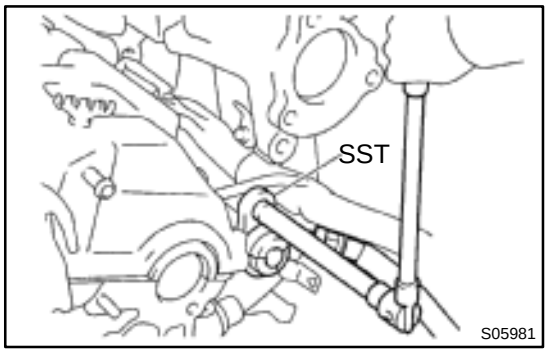

13. DISCONNECT FUEL INLET HOSE FROM DELIVERY PIPE

(a) Using SST, loosen the fuel pulsation damper.
SST 09612–24014 (09617–24011)

(b) Remove the fuel pulsation damper and 2 gaskets, and disconnect the fuel inlet hose from the delivery pipe.

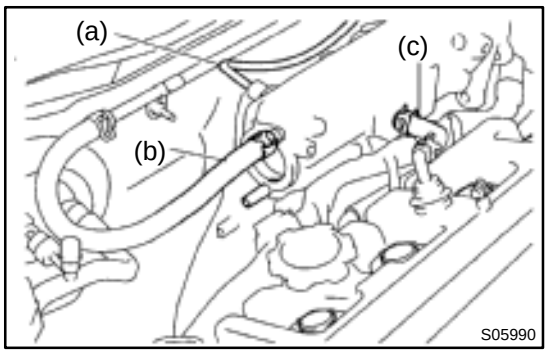

14. REMOVE INTAKE MANIFOLD

(a) Disconnect the MAP sensor vacuum hose from the gas filter.

(b) Disconnect the brake booster vacuum hose from the intake manifold.

(c) Disconnect the PCV hose from the intake manifold.

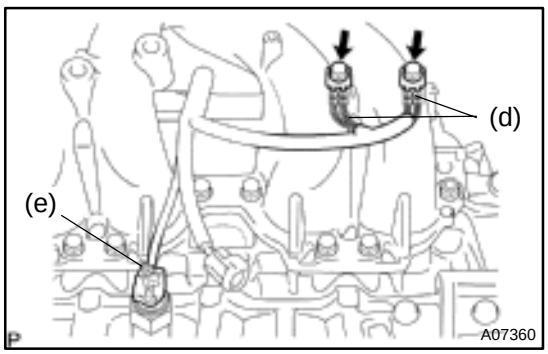

(d) Remove the 2 bolts, and disconnect the 2 ground wires from the intake manifold.

(e) Disconnect the knock sensor 1 connector.

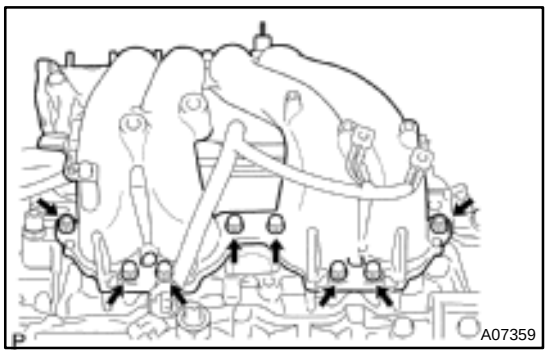

(f) Remove the 6 bolts, 2 nuts, intake manifold and gasket.

15. California:
REMOVE AIR HOSE FOR AIR ASSIST SYSTEM

Disconnect the air hose from the cylinder head port, and remove the air hose.

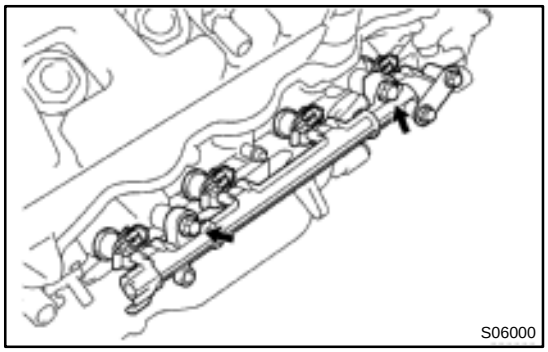

16. REMOVE DELIVERY PIPE AND INJECTORS

(a) Disconnect the 4 injector connectors.

(b) Remove the 2 bolts and delivery pipe together with the 4 injectors.

NOTICE:
Be careful not to drop the injectors when removing the delivery pipe.

(c) Remove the 4 insulators (except California) and 2 spacers from the cylinder head.

(d) Pull out the 4 injectors from the delivery pipe.

(e) California:
Remove the 2 O–rings, insulator and grommet from each injector.

(f) Except California:
Remove the O–ring and grommet from each injector.

17. DISCONNECT TIMING BELT FROM CAMSHAFT TIMING PULLEY (See page EM–17)

18. REMOVE CAMSHAFT TIMING PULLEY (See page EM–17)

19. REMOVE NO.1 IDLER PULLEY AND TENSION SPRING

Remove the bolt, pulley and tension spring.

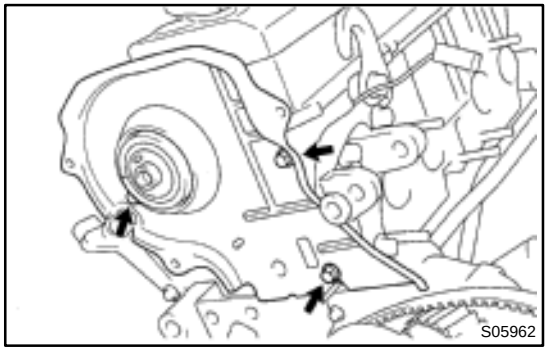

20. REMOVE NO.3 TIMING BELT COVER

Remove the 3 bolts and timing and cover.

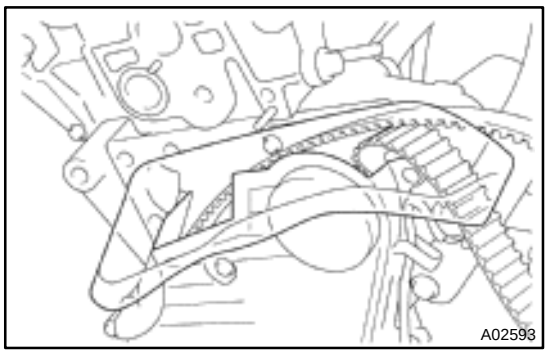

NOTICE:

Support the timing belt, so the meshing of the crankshaft timing pulley and timing belt does not shift.

Be careful not to drop anything inside the timing belt cover.

Do not allow the belt to come into contact with oil, water or dust.

21. REMOVE ENGINE HANGERS AND GENERATOR BRACKET

(a) Remove the 3 bolts, the generator bracket and RH engine hanger assembly.

(b) Remove the bolt and LH engine hanger.

22. REMOVE OIL PRESSURE SWITCH

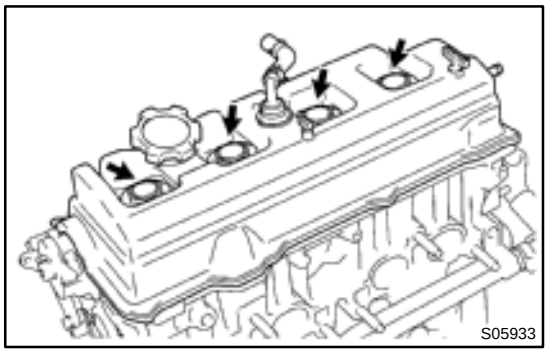

23. REMOVE CYLINDER HEAD COVER

Remove the 4 nuts, grommets, head cover and gasket.

HINT:

Arrange the grommets in the correct order, so that they can be reinstalled into their original positions. This minimizes any possibility of oil leakage due to reuse of the grommets in different positions.

24. REMOVE CAMSHAFTS

NOTICE:

Since the thrust clearance of the camshaft is small, the camshaft must be kept level while it is being removed. If the camshaft is not kept level, the portion of the cylinder head receiving the shaft thrust may crack or be damaged, causing the camshaft to seize or break. To avoid this, the following steps should be carried out.

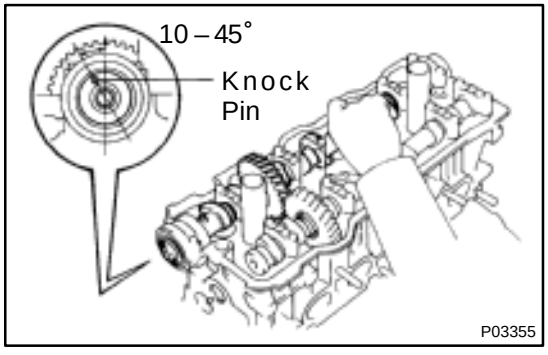

(a) Remove the exhaust camshaft.

(1) Set the knock pin of the intake camshaft at 10 – 45° BTDC of camshaft angle.

HINT:

The above angle allows No.2 and No.4 cylinder cam lobes of the exhaust camshaft to push their valve lifters evenly.

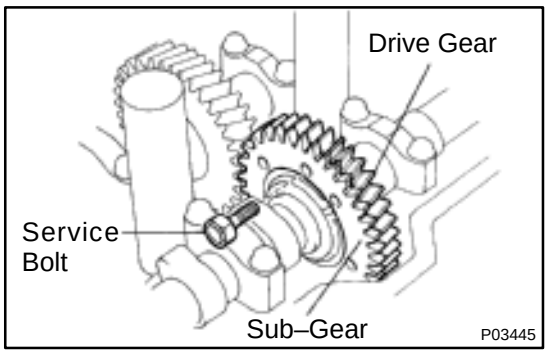

(2) Secure the exhaust camshaft sub–gear to drive gear with a service bolt.

Recommended service bolt:

Thread diameter	6 mm
Thread pitch	1.0 mm
Bolt length	16 – 20 mm (0.63 – 0.79 in.)

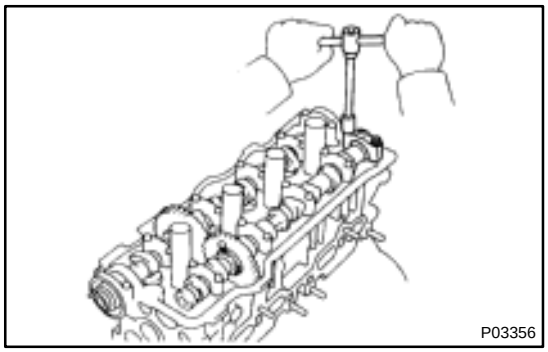

HINT:

When removing the camshaft, make sure that the torsional spring force of the sub–gear has been eliminated by the above operation.

(3) Remove the 2 bolts and rear bearing cap.

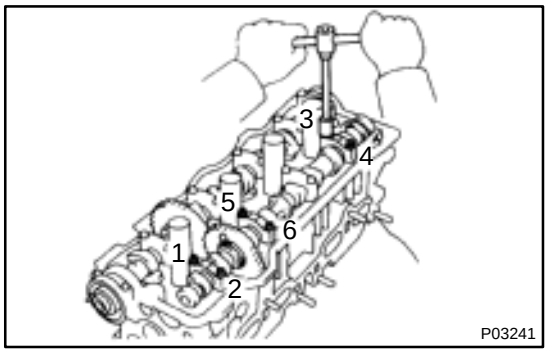

(4) Uniformly loosen and remove the 6 bolts on the No.1, No.2 and No.4 bearing caps in several passes, in the sequence shown.

NOTICE:

Do not remove the No.3 bearing cap bolts at this stage.

(5) Remove the No.1, No.2 and No.4 bearing caps.

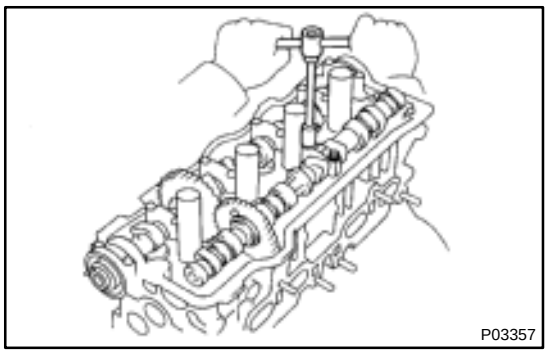

(6) Alternately loosen and remove the 2 bolts on the No.3 bearing cap.

HINT:

As the 2 No.3 bearing cap bolts are loosened, make sure that the camshaft is lifted out straight and level.

If the camshaft is not being lifted out straight and level, re-tighten the 2 No.3 bearing cap bolts. Then reverse the order of above steps from (6) to (1) and reset the knock pin of the intake camshaft at 10 – 45° BTDC, and repeat steps from (2) to (6) once again.

NOTICE:

Do not pry on or attempt to force the camshaft with a tool or other object.

(7) Remove the No.3 bearing cap and exhaust camshaft.

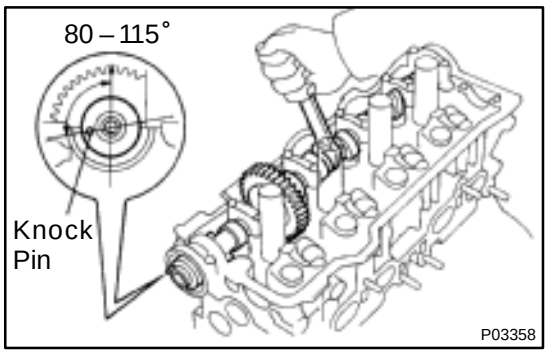

(b) Remove the intake camshaft.

(1) Set the knock pin of the intake camshaft at 80 – 115° BTDC of camshaft angle.

HINT:

The above angle allows the No.1 and No.3 cylinder cam lobes of intake camshaft to push their valve lifters evenly.

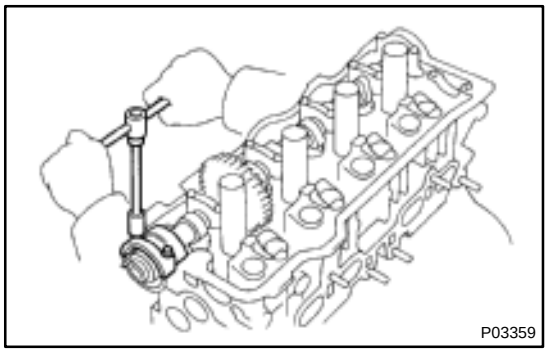

(2) Remove the 2 bolts, front bearing cap and oil seal.

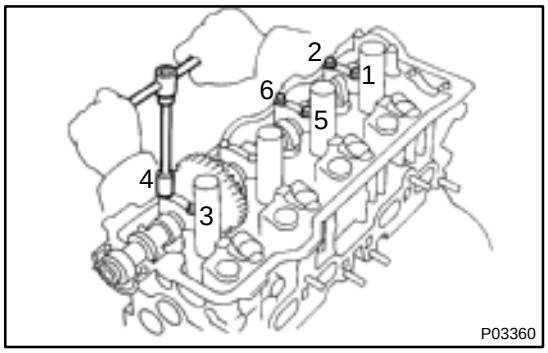

(3) Uniformly loosen and remove the 6 bolts on the No.1, No.3 and No.4 bearing caps in several passes, in the sequence shown.

NOTICE:

Do not remove the No.2 bearing cap bolts at this stage.

(4) Remove the No.1, No.3 and No.4 bearing caps.

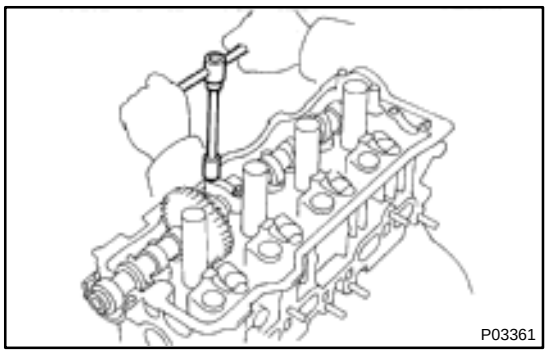

(5) Alternately loosen and remove the 2 bolts on the No.2 bearing cap.

HINT:

As the 2 No.2 bearing cap bolts are loosened, make sure that the camshaft is lifted out straight and level, after breaking adhesion on the front bearing cap.

If the camshaft is not being lifted out straight and level, re-tighten the 2 No.2 bearing cap bolts. Reverse the order of above steps from (5) to (1) and reset the knock pin of the intake camshaft at 80 – 115° BTDC, and repeat steps from (2) to (5) once again.

NOTICE:

Do not pry on or attempt to force the camshaft with a tool or other object.

(6) Remove the No.2 bearing cap and camshaft.

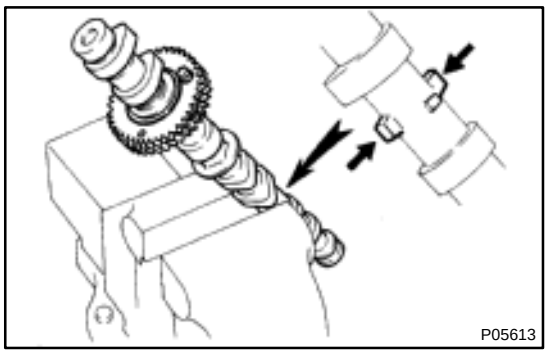

25. DISASSEMBLE EXHAUST CAMSHAFT

(a) Mount the camshaft in a vise.

NOTICE:

Be careful not to damage the camshaft.

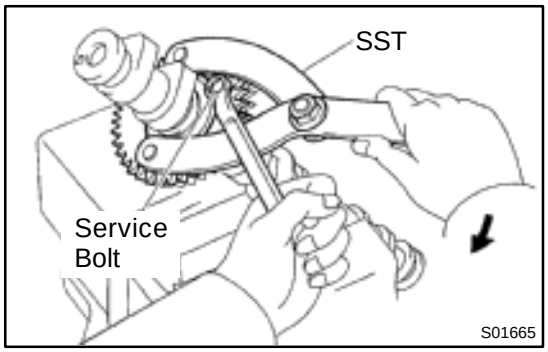

(b) Using SST, turn the sub–gear clockwise, and remove the service bolt.

SST 09960–10010 (09962–01000, 09963–00500)

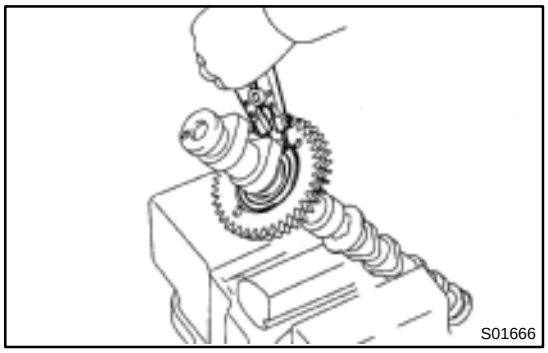

(c) Using snap ring pliers, remove the snap ring.

(d) Remove the wave washer, camshaft sub–gear and gear spring.

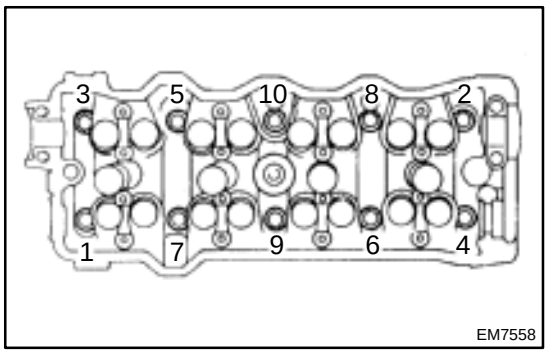

26. REMOVE CYLINDER HEAD

(a) Disconnect the camshaft position sensor connector.

(b) Remove the 2 bolts holding the water bypass pipe to the cylinder head.

(c) Uniformly loosen and remove the 10 cylinder head bolts in several passes, in the sequence shown.

NOTICE:

Cylinder head warpage or cracking could result from removing bolts in incorrect order.

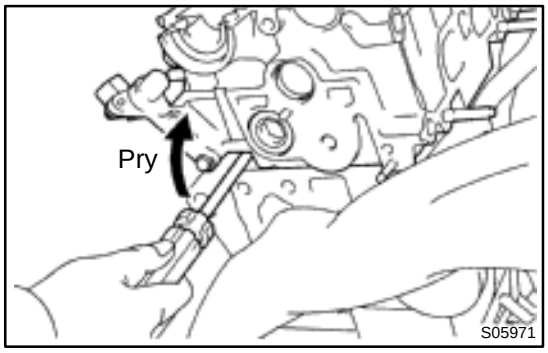

(d) Lift the cylinder head from the dowels on the cylinder block, and place the cylinder head on wooden blocks on a bench.

HINT:

If the cylinder head is off, pry between the cylinder head and cylinder block with a screwdriver.

NOTICE:

Be careful not to damage the contact surfaces of the cylinder head and cylinder block.

EM089–03

DISASSEMBLY

1. REMOVE CAMSHAFT POSITION SENSOR ASSEMBLY

Remove the bolt and sensor assembly.

2. REMOVE VALVE LIFTERS AND SHIMS

HINT:

Arrange the valve lifters and shims in the correct order.

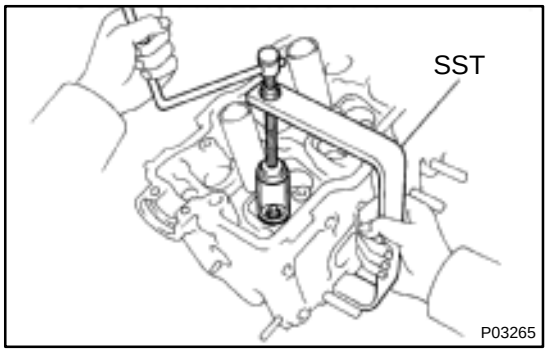

3. REMOVE VALVES

(a) Using SST, compress the valve spring and remove the 2 keepers.

SST 09202–70020 (09202–00010)

(b) Remove the spring retainer, valve spring, valve and spring seat.

HINT:

Arrange the valves, valve springs, spring seats and spring retainers in the correct order.

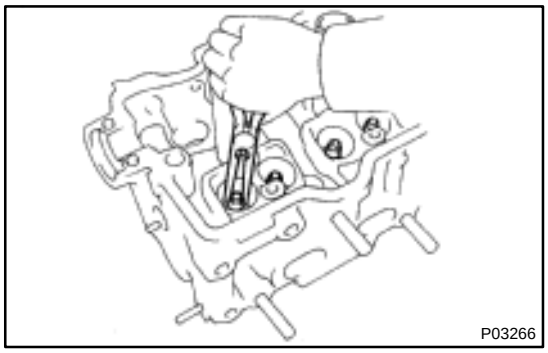

(c) Using needle–nose pliers, remove the oil seal.

EM08A–04

INSPECTION

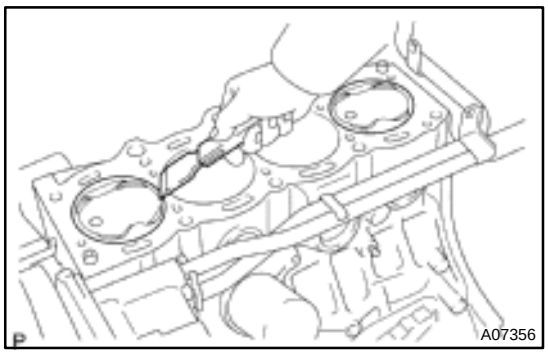

1. CLEAN TOP SURFACES OF PISTONS AND CYLINDER BLOCK

(a) Turn the crankshaft, and bring each piston to top dead center (TDC). Using a gasket scraper, remove all the carbon from the piston top surface.

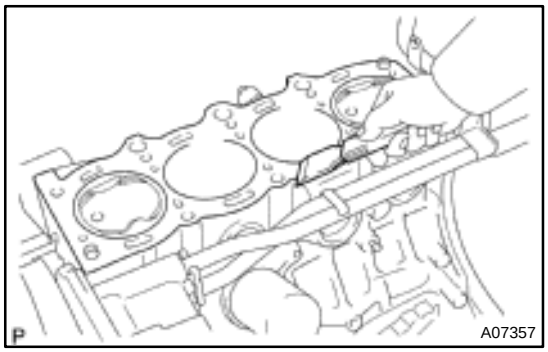

(b) Using a gasket scraper, remove all the gasket material from the cylinder block surface.

(c) Using compressed air, blow carbon and oil from the bolt holes.

CAUTION:
Protect your eyes when using high–pressure compressed air.

2. INSPECT TOP SURFACE OF CYLINDER BLOCK FOR FLATNESS (See page EM–97)

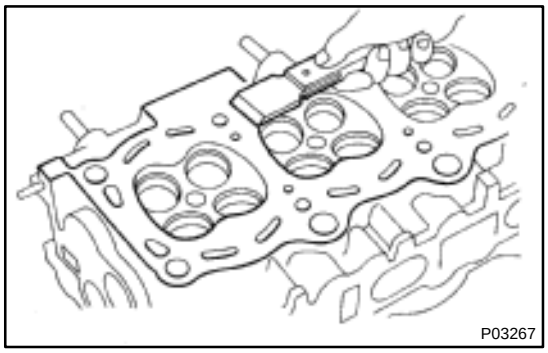

3. CLEAN CYLINDER HEAD

(a) Using a gasket scraper, remove all the gasket material from the cylinder block contact surface.

NOTICE:
Be careful not to scratch the cylinder block contact surface.

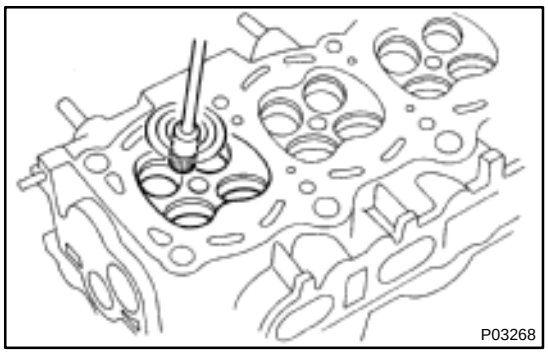

(b) Using a wire brush, remove all the carbon from the combustion chamber.

NOTICE:
Be careful not to scratch the cylinder block contact surface.

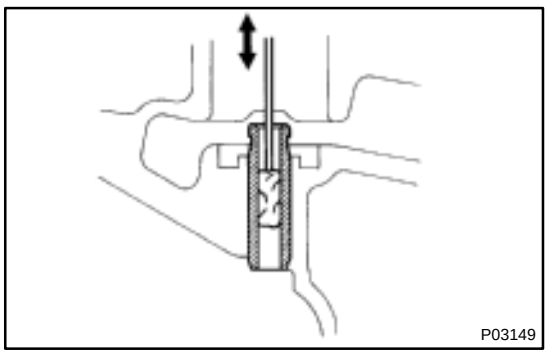

(c) Using a valve guide bushing brush and solvent, clean all the guide bushings.

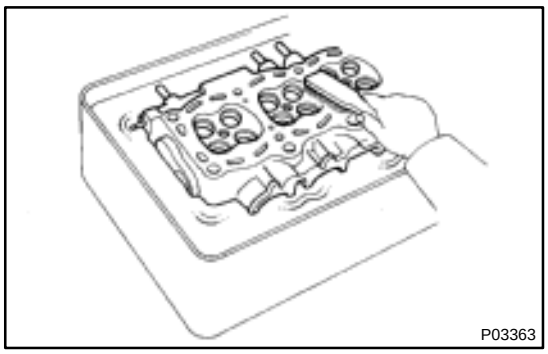

(d) Using a soft brush and solvent, thoroughly clean the cylinder head.

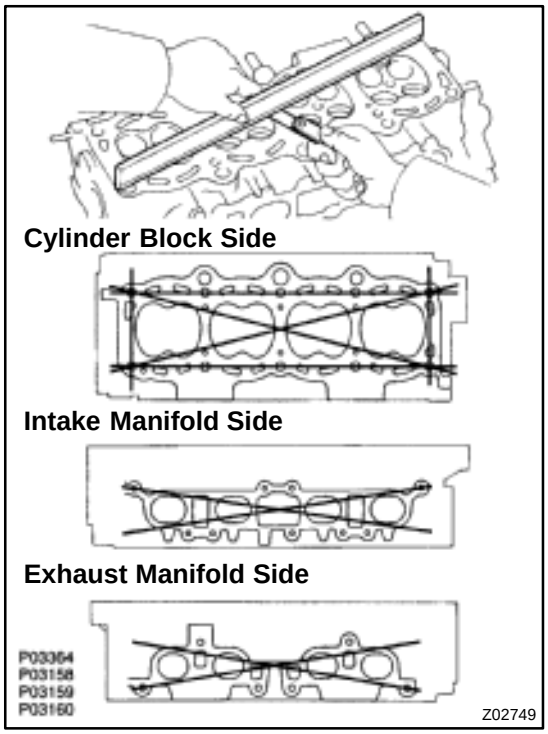

4. INSPECT CYLINDER HEAD

(a) Inspect for flatness.

Using a precision straight edge and feeler gauge, measure the surfaces contacting the cylinder block and the manifolds for warpage.

Maximum warpage:

Cylinder block side	0.05 mm (0.0020 in.)
Manifold side	0.08 mm (0.0031 in.)

If warpage is greater than maximum, replace the cylinder head.

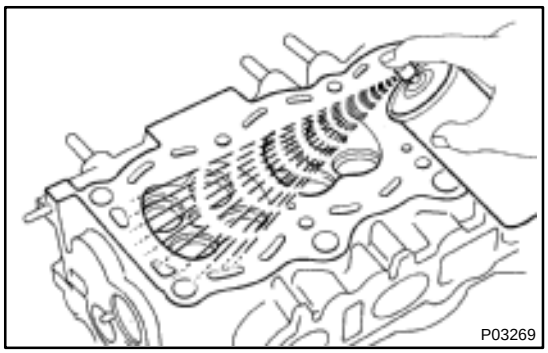

(b) Inspect for cracks.

Using a dye penetrant, check the combustion chamber, intake ports, exhaust ports and cylinder block surface for cracks.

If cracked, replace the cylinder head.

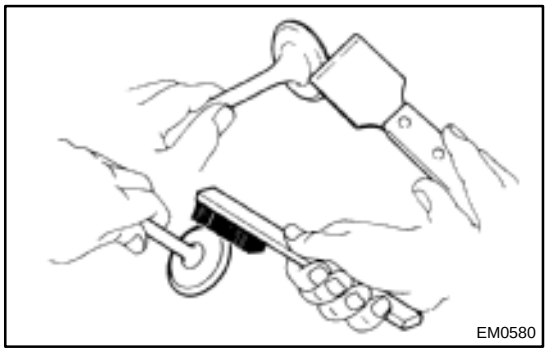

5. CLEAN VALVES

(a) Using a gasket scraper, chip off any carbon from the valve head.

(b) Using a wire brush, thoroughly clean the valve.

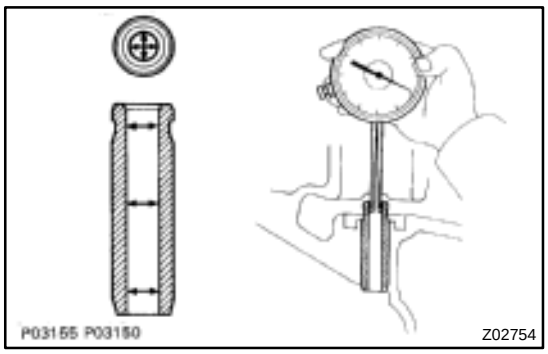

6. INSPECT VALVE STEMS AND GUIDE BUSHINGS

(a) Using a caliper gauge, measure the inside diameter of the guide bushing.

Bushing inside diameter:
6.010 – 6.030 mm (0.2366 – 0.2374 in.)

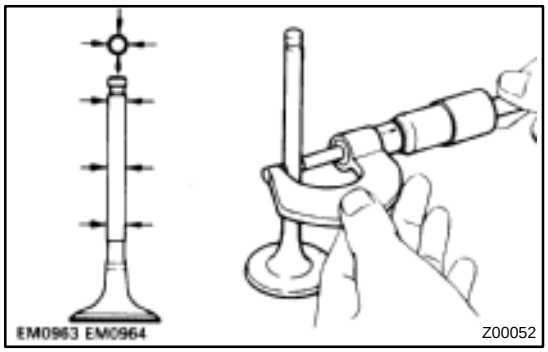

(b) Using a micrometer, measure the diameter of the valve stem.

Valve stem diameter:

Intake	5.970 – 5.985 mm (0.2350 – 0.2356 in.)
Exhaust	5.965 – 5.980 mm (0.2348 – 0.2354 in.)

(c) Subtract the valve stem diameter measurement from the guide bushing inside diameter measurement.

Standard oil clearance:

Intake	0.025 – 0.060 mm (0.0010 – 0.0024 in.)
Exhaust	0.030 – 0.065 mm (0.0012 – 0.0026 in.)

Maximum oil clearance:

Intake	0.08 mm (0.0031 in.)
Exhaust	0.10 mm (0.0039 in.)

If the clearance is greater than maximum, replace the valve and guide bushing. (See page EM–50)

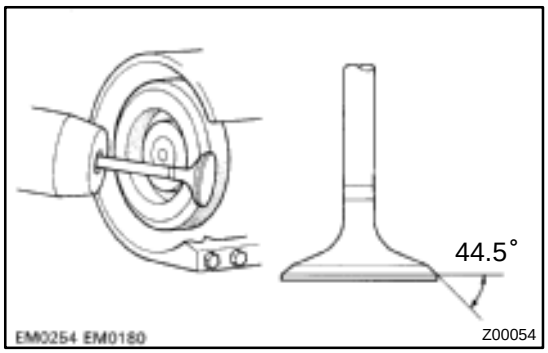

7. INSPECT AND GRIND VALVES

(a) Grind the valve enough to remove pits and carbon.

(b) Check that the valve is ground to the correct valve face angle.

Valve face angle: 44.5°

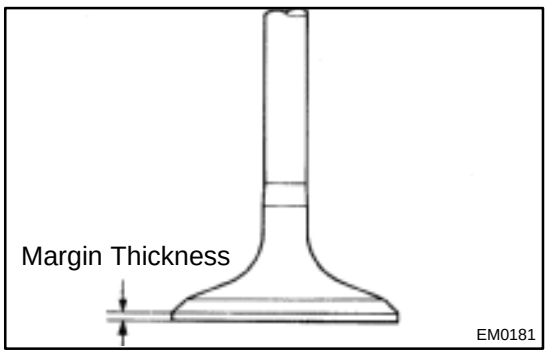

(c) Check the valve head margin thickness.

Standard margin thickness:
0.8 – 1.2 mm (0.031 – 0.047 in.)
Minimum margin thickness: 0.5 mm (0.020 in.)

If the margin thickness is less than minimum, replace the valve.

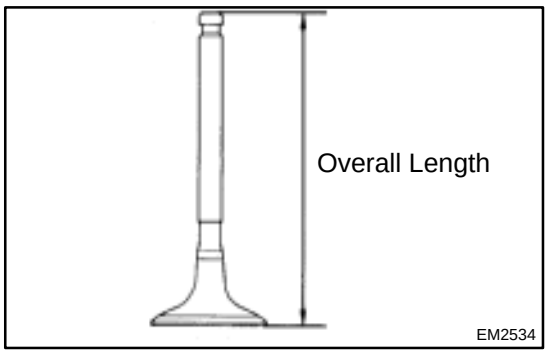

(d) Check the valve overall length.

Standard overall length:

Intake	97.40 – 97.80 mm (3.8346 – 3.8504 in.)
Exhaust	98.25 – 98.65 mm (3.8681 – 3.8839 in.)

Minimum overall length:

Intake	97.1 mm (3.823 in.)
Exhaust	98.0 mm (3.858 in.)

If the overall length is less than minimum, replace the valve.

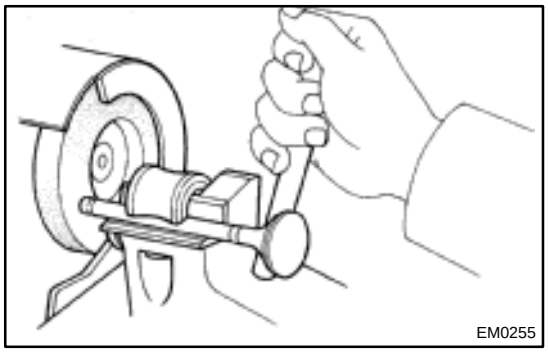

(e) Check the surface of the valve stem tip for wear.

If the valve stem tip is worn, resurface the tip with a grinder or replace the valve.

NOTICE:

Do not grind off more than the minimum length.

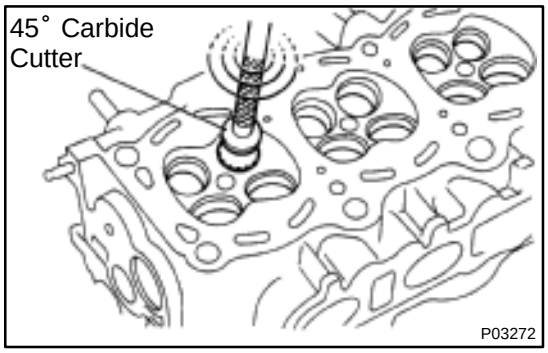

8. INSPECT AND CLEAN VALVE SEATS

(a) Using a 45˚ carbide cutter, resurface the valve seats. Remove only enough metal to clean the seats.

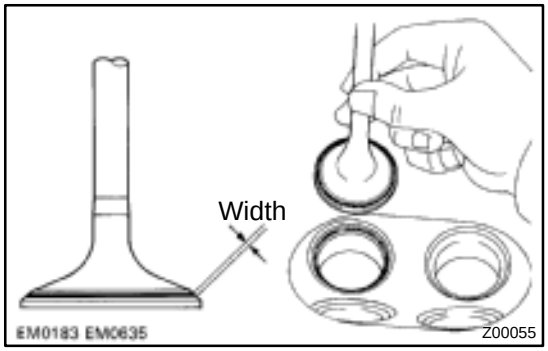

(b) Check the valve seating position.

Apply a light coat of prussian blue (or white lead) to the valve face. Lightly press the valve against the seat. Do not rotate valve.

(c) Check the valve face and seat for the following:

If blue appears 360˚ around the face, the valve is concentric. If not, replace the valve.

If blue appears 360˚ around the valve seat, the guide and face are concentric. If not, resurface the seat.

Check that the seat contact is in the middle of the valve face with the following width:

1.0 – 1.4 mm (0.039 – 0.055 in.)

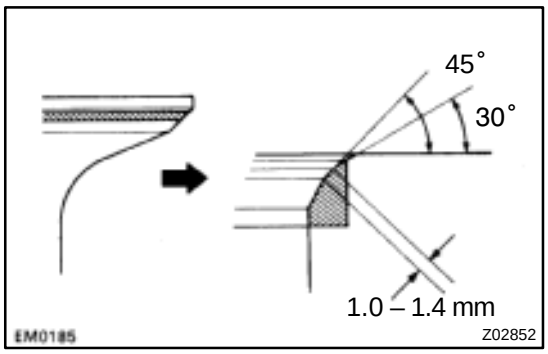

If not, correct the valve seats as follows:

(1) If the seating is too high on the valve face, use 30° and 45° cutters to correct the seat.

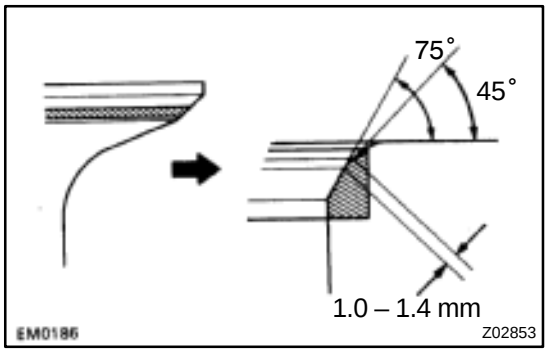

(2) If the seating is too low on the valve face, use 75° and 45° cutters to correct the seat.

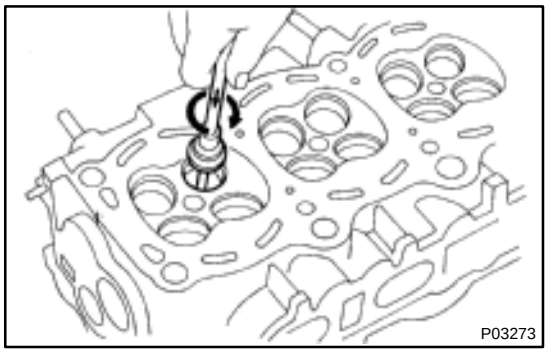

(d) Hand–lap the valve and valve seat with an abrasive compound.

(e) After hand–lapping, clean the valve and valve seat.

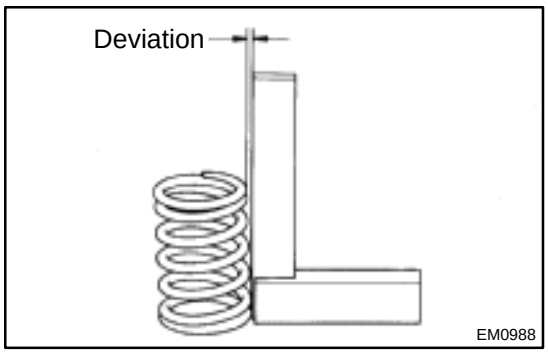

9. INSPECT VALVE SPRINGS

(a) Using a steel square, measure the deviation of the valve spring.

Maximum deviation: 2.0 mm (0.079 in.)

If the deviation is greater than maximum, replace the valve spring.

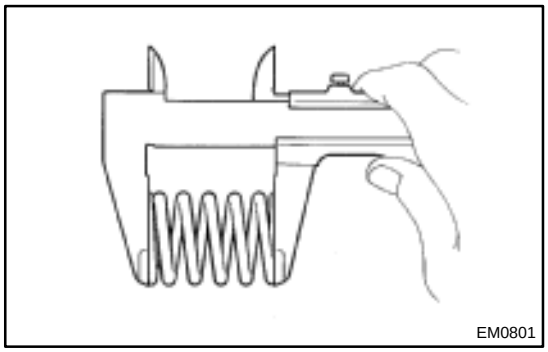

(b) Using a vernier caliper, measure the free length of the valve spring.

Free length: 40.95 – 42.80 mm (1.6122 – 1.6850 in.)

If the free length is not as specified, replace the valve spring.

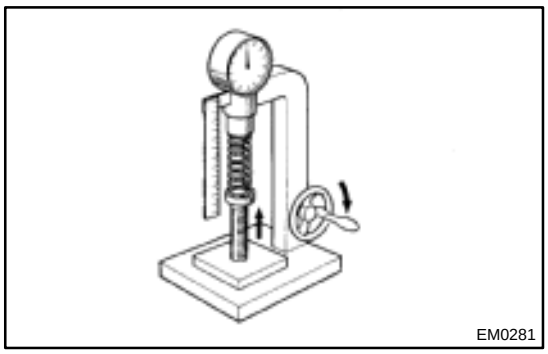
EM0281

(c) Using a spring tester, measure the tension of the valve spring at the specified installed length.

Installed tension:
164 – 189 N (16.7 – 19.3 kgf, 36.8 – 42.5 lbf)
at 34.7 mm (1.366 in.)

If the installed tension is not as specified, replace the valve spring.

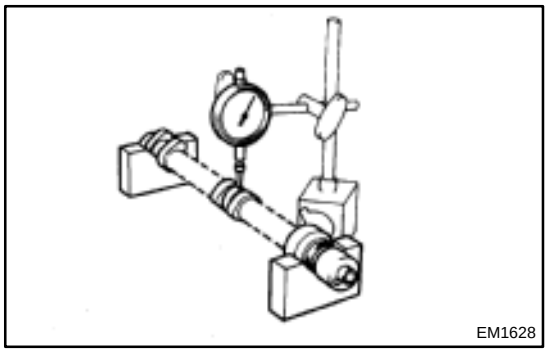
EM1628

10. INSPECT CAMSHAFTS

(a) Inspect the circle runout.
(1) Place the camshaft on V–blocks.
(2) Using a dial indicator, measure the circle runout at the center journal.

Maximum circle runout: 0.04 mm (0.0016 in.)

If the circle runout is greater than maximum, replace the camshaft.

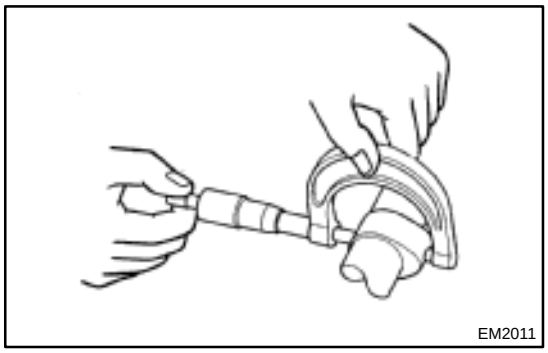
EM2011

(b) Using a micrometer, measure the cam lobe height.

Standard cam lobe height:

Intake	42.01 – 42.11 mm (1.6539 – 1.6579 in.)
Exhaust	40.06 – 40.16 mm (1.5772 – 1.5811 in.)

Minimum cam lobe height:

Intake	41.90 mm (1.6496 in.)
Exhaust	39.95 mm (1.5728 in.)

If the cam lobe height is less than minimum, replace the camshaft.

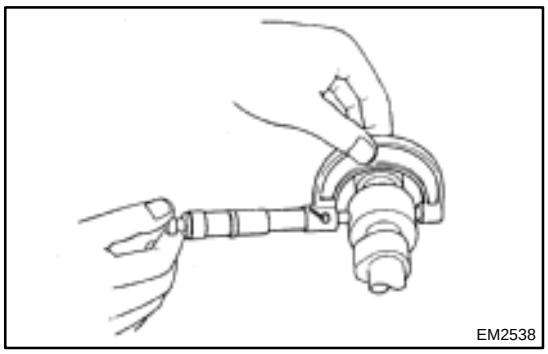
EM2538

(c) Using a micrometer, measure the journal diameter.

Journal diameter:
26.959 – 26.975 mm (1.0614 – 1.0620 in.)

If the journal diameter is not as specified, check the oil clearance.

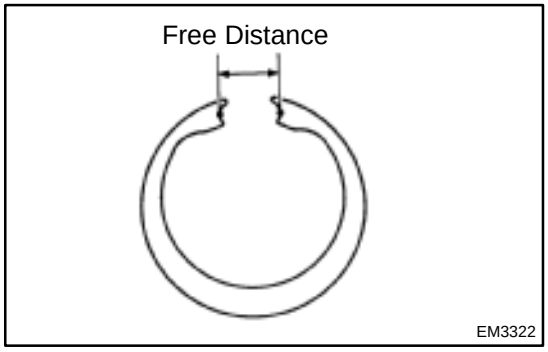

EM3322

(d) Using vernier calipers, measure the free distance between the gear spring ends.

Free distance: 22.5 – 22.9 mm (0.886 – 0.902 in.)

If the free distance is not as specified, replace the gear spring.

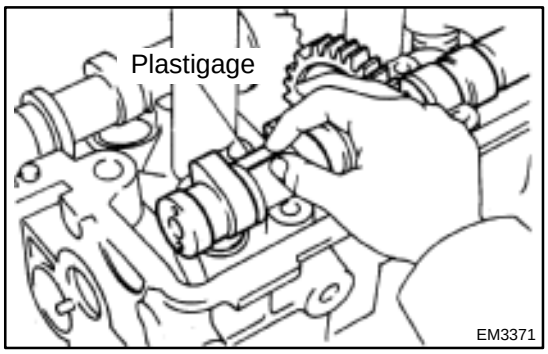

(e) Inspect the journal oil clearance.
(1) Clean the bearing caps and camshaft journals.
(2) Check that bearings for flaking and scoring.

If the bearings are damaged, replace the bearing caps and cylinder head as a set.

(3) Place the camshafts on the cylinder head.
(4) Lay a strip of Plastigage across each of the camshaft journals.

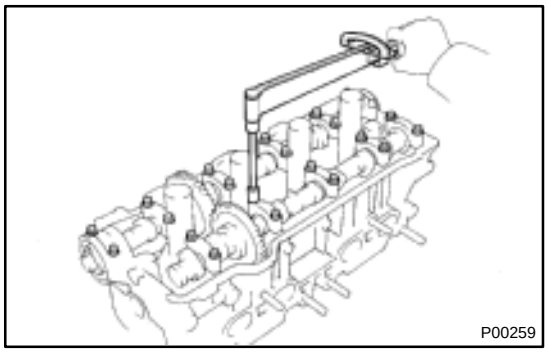

(5) Install the bearing caps. (See page EM–53)

NOTICE:
Do not turn the camshaft.

(6) Remove the bearing caps.

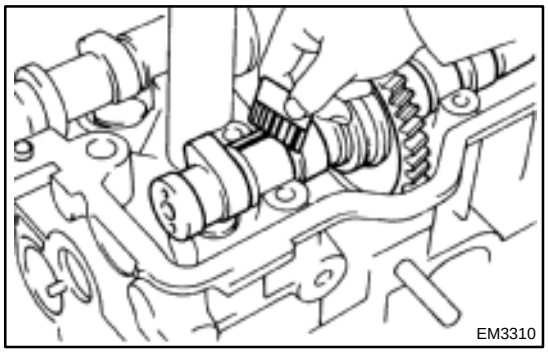

(7) Measure the Plastigage at its widest point.

Standard oil clearance:
0.025 – 0.062 mm (0.0010 – 0.0024 in.)
Maximum oil clearance: 0.10 mm (0.0039 in.)

If the oil clearance is greater than maximum, replace the camshaft. If necessary, replace the bearing caps and cylinder head as a set.

(8) Completely remove the Plastigage.

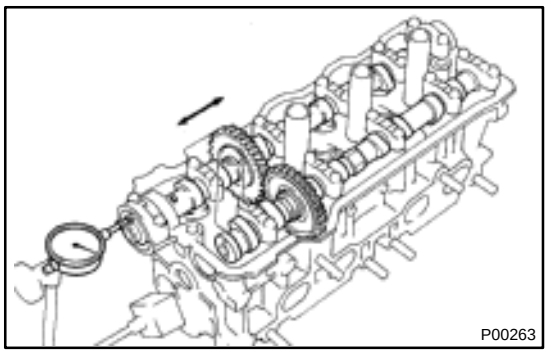

(f) Inspect the camshaft thrust clearance.
(1) Install the camshaft. (See page EM–53)
(2) Using a dial indicator, measure the thrust clearance while moving the camshaft back and forth.

Standard thrust clearance:

Intake	0.045 – 0.100 mm (0.0018 – 0.0039 in.)
Exhaust	0.030 – 0.085 mm (0.0012 – 0.0033 in.)

Maximum thrust clearance:

Intake	0.12 mm (0.0047 in.)
Exhaust	0.10 mm (0.0039 in.)

If the thrust clearance is greater than maximum, replace the camshaft. If necessary, replace the bearing caps and cylinder head as a set.

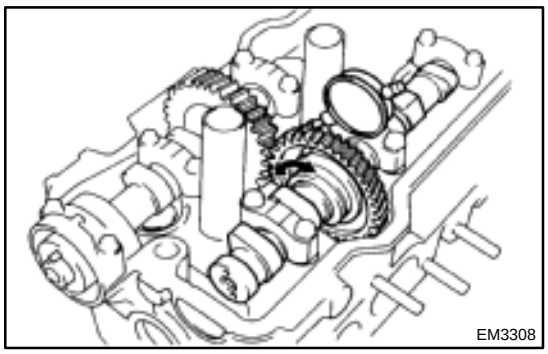
EM3308

(g) Inspect the camshaft gear backlash.
(1) Install the camshafts without installing the exhaust cam sub–gear. (See page EM–53)
(2) Using a dial indicator, measure the backlash.
Standard backlash:
0.020 – 0.200 mm (0.0008 – 0.0079 in.)
Maximum backlash: 0.30 mm (0.0188 in.)
If the backlash is greater then maximum, replace the camshafts.

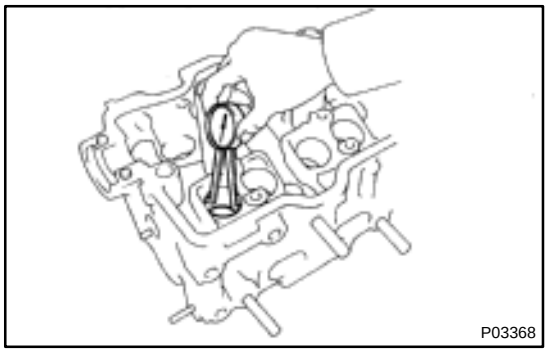
P03368

11. INSPECT VALVE LIFTERS AND LIFTER BORES
(a) Using a caliper gauge, measure the lifter bore diameter of the cylinder head.
Lifter bore diameter:
31.000 – 31.018 mm (1.2205 – 1.2212 in.)

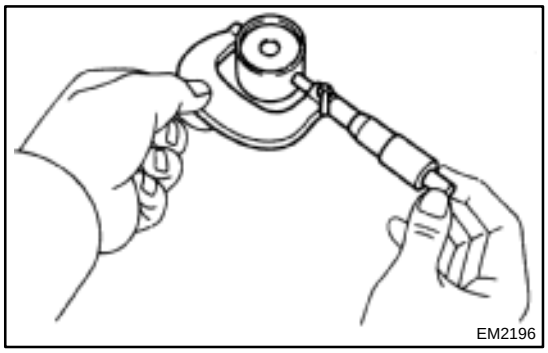
EM2196

(b) Using a micrometer, measure the lifter diameter.
Lifter diameter:
30.966 – 30.976 mm (1.2191 – 1.2195 in.)
(c) Subtract the lifter diameter measurement from the lifter bore diameter measurement.
Standard oil clearance:
0.024 – 0.052 mm (0.0009 – 0.0020 in.)
Maximum oil clearance: 0.07 mm (0.0028 in.)
If the oil clearance is greater than maximum, replace the lifter. If necessary, replace the cylinder head.

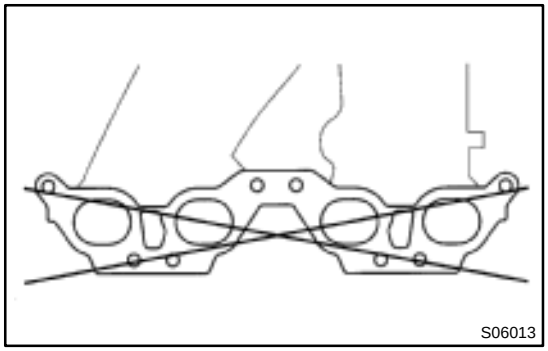
S06013

12. INSPECT INTAKE MANIFOLD
Using a precision straight edge and feeler gauge, measure the surface contacting the cylinder head for warpage.
Maximum warpage: 0.30 mm (0.0118 in.)
If warpage is greater than maximum, replace the manifold.

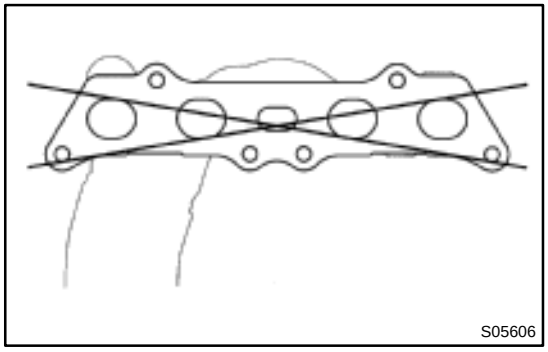
S05606

13. INSPECT EXHAUST MANIFOLD
Using a precision straight edge and feeler gauge, measure the surface contacting the cylinder head for warpage.
Maximum warpage: 0.30 mm (0.0118 in.)
If warpage is greater than maximum, replace the manifold.

EM08B–03

REPLACEMENT

REPLACE VALVE GUIDE BUSHINGS

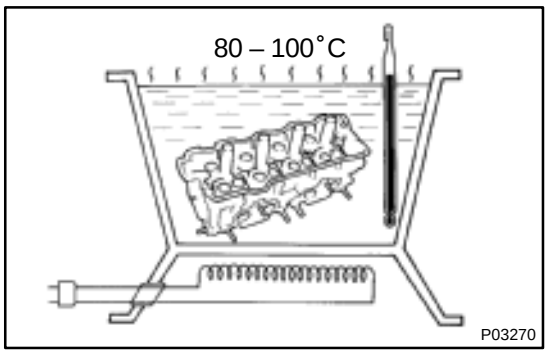

(a) Gradually heat the cylinder head to 80 – 100˚C (176 – 212˚F).

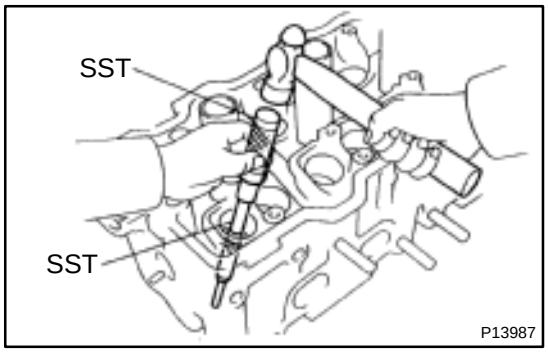

(b) Using SST and a hammer, tap out the guide bushing.
SST 09201–10000 (09201–01060),
09950–70010 (09951–07100)

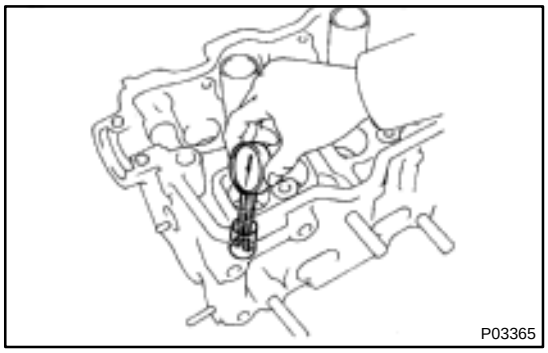

(c) Using a caliper gauge, measure the bushing bore diameter of the cylinder head.

Both intake and exhaust

Bushing bore diameter mm (in.)	Bushing size
10.985 – 11.012 (0.4325 – 0.4335)	Use STD
11.035 – 11.062 (0.4344 – 0.4355)	Use O/S 0.05

(d) Select a new guide bushing (STD or O/S 0.05).
If the bushing bore diameter of the cylinder head is greater than 11.012 mm (0.4335 in.), machine the bushing bore to the following dimension:

11.035 – 11.062 mm (0.4344 – 0.4355 in.)

If the bushing bore diameter of the cylinder head is greater than 11.062 mm (0.4355 in.), replace the cylinder head.

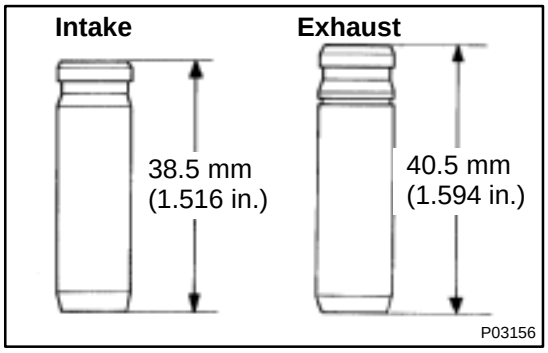

HINT:
Different the bushings are used for the intake and exhaust.

(e) Gradually heat the cylinder head to 80 – 100˚C (176 – 212˚F).

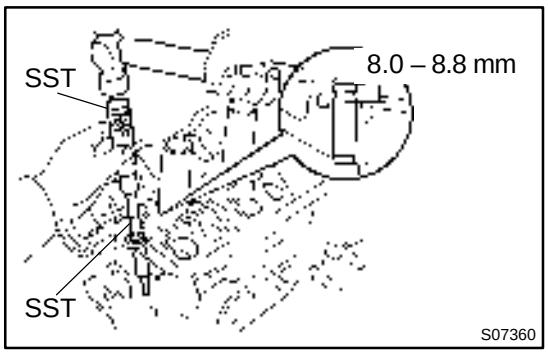

(f) Using SST and a hammer, tap in a new guide bushing until there is 8.0 – 8.8 mm (0.315 – 0.346 in.) protruding from the cylinder head.
SST 09201–10000 (09201–01060),
09950–70010 (09951–07100)

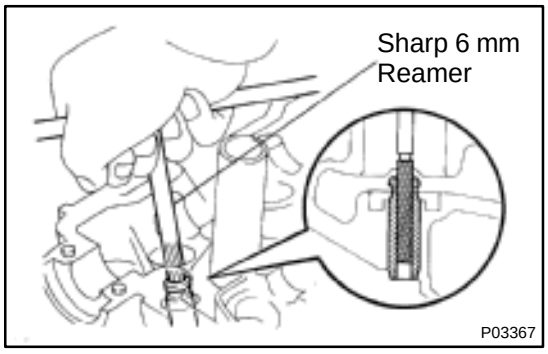

(g) Using a sharp 6 mm reamer, ream the guide bushing to obtain the standard specified clearance (See page EM–42) between the guide bushing and valve stem.

EM0YM–01

REASSEMBLY

HINT:

Thoroughly clean all parts to be assembled.
Before installing the parts, apply new engine oil to all sliding and rotating surfaces.
Replace all gaskets and oil seals with new ones.

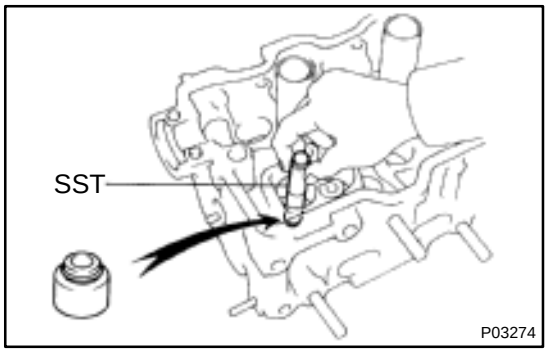

1. INSTALL VALVES

(a) Using SST, push in a new oil seal.
SST 09201–41020

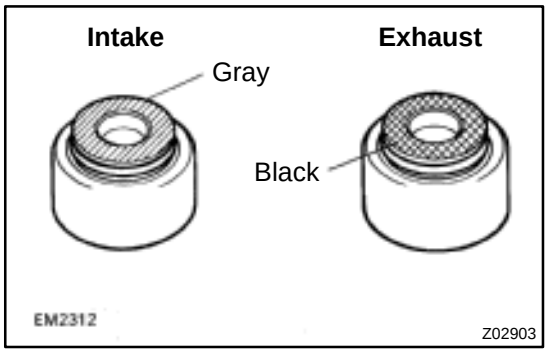

HINT:
The intake valve oil seal is gray and the exhaust valve oil seal is black.

(b) Install the valve, spring seat, valve spring and spring retainer.

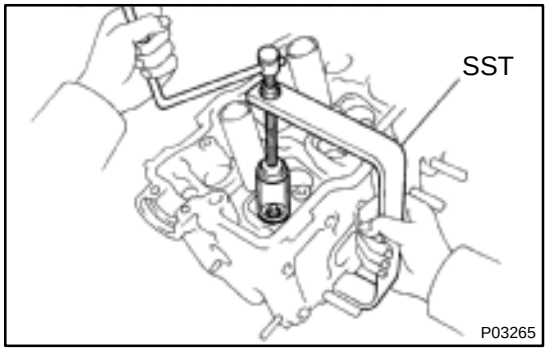

(c) Using SST, compress the valve spring and place the 2 keepers around the valve stem.
SST 09202–70020 (09202–00010)

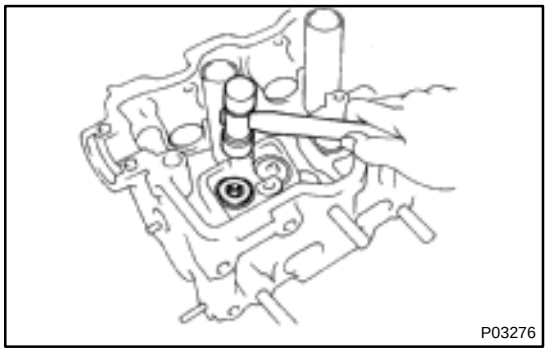

(d) Using a plastic–faced hammer, lightly tap the valve stem tip to assure a proper fit.

2. INSTALL VALVE LIFTERS AND SHIMS

(a) Install the valve lifter and shim.
(b) Check that the valve lifter rotates smoothly by hand.

3. INSTALL CAMSHAFT POSITION SENSOR ASSEMBLY

Install the sensor assembly with the bolt.

Torque: 9.5 N·m (97 kgf·cm, 84 in.·lbf)

EM08D–04

INSTALLATION

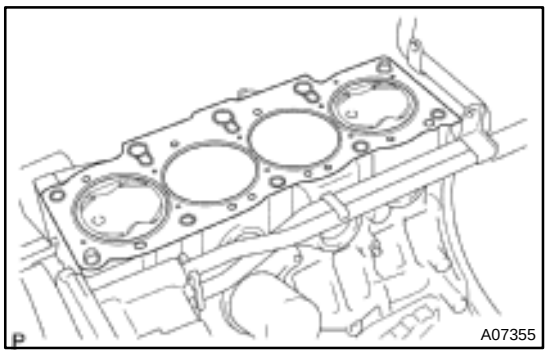

1. PLACE CYLINDER HEAD ON CYLINDER BLOCK

(a) Place a new cylinder head gasket on the cylinder block.

NOTICE:

Be careful of the installation direction.

(b) Place the cylinder head on the cylinder head gasket.

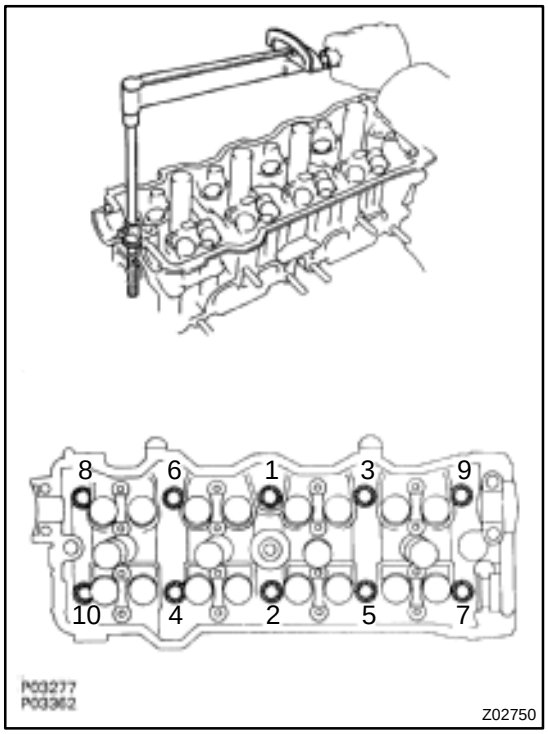

2. INSTALL CYLINDER HEAD BOLTS

HINT:

The cylinder head bolts are tightened in 2 progressive steps (steps (b) and (d)).

If any cylinder head bolt is broken or deformed, replace it.

(a) Apply a light coat of engine oil on the threads and under the heads of the cylinder head bolts.

(b) Install and uniformly tighten the 10 cylinder head bolts and plate washers in several passes, in the sequence shown.

Torque: 49 N·m (500 kgf·cm, 36 ft·lbf)

If any one of the cylinder head bolts does not meet the torque specification, replace the cylinder head bolt.

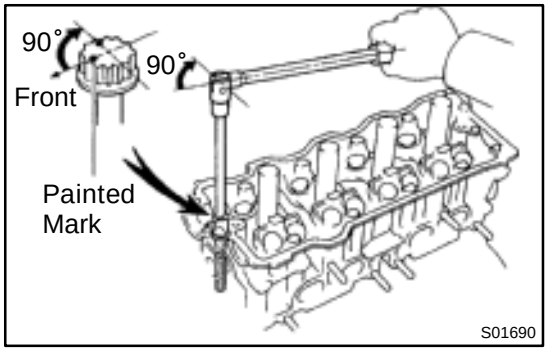

(c) Mark the front of the cylinder head bolt head with paint.

(d) Retighten the cylinder head bolts 90° in the numerical order shown.

(e) Check that the painted mark is now at a 90° angle to the front.

(f) Install the 2 bolts holding the water bypass pipe to the cylinder head.

Torque: 19 N·m (195 kgf·cm, 14 ft·lbf)

(g) Connect the camshaft position sensor connector.

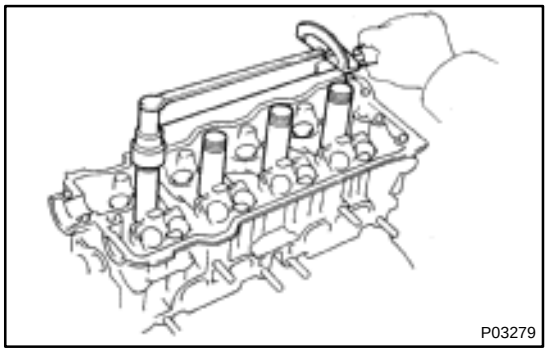

3. INSTALL SPARK PLUG TUBES

(a) Clean the cylinder head tube holes of any residual adhesive, oil or foreign particles. Remove any oil with kerosene or gasoline.

(b) Screw the threads of the spark plug tube coated with adhesive into the cylinder head.

(c) Using the spark plug tube nut and a 30 mm socket wrench, tighten the spark plug tubes.

Torque: 49 N·m (500 kgf·cm, 36 ft·lbf)

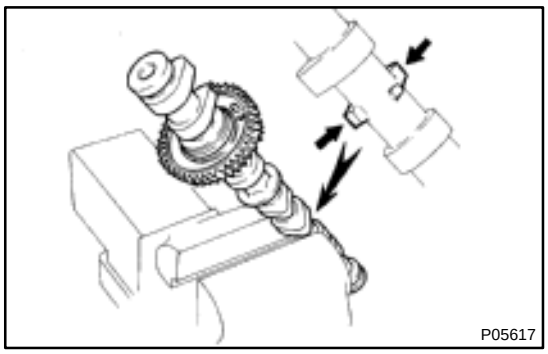

4. ASSEMBLE EXHAUST CAMSHAFT

(a) Mount the camshaft in a vise.

NOTICE:

Be careful not to damage the camshaft.

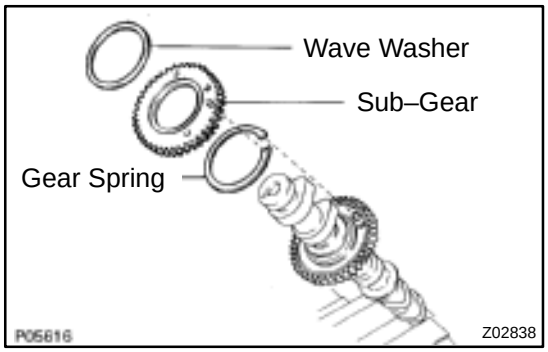

(b) Install the camshaft gear spring, camshaft sub–gear and wave washer.

HINT:

Align the pins on the gears with the spring ends.

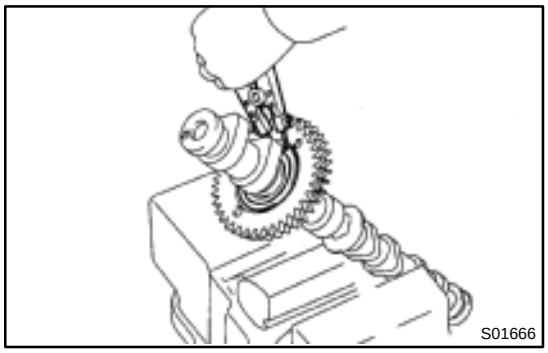

(c) Using snap ring pliers, install the snap ring.

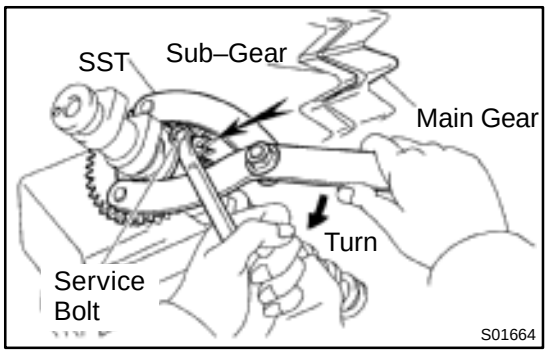

(d) Using SST, align the holes of the camshaft drive gear and sub–gear by turning camshaft sub–gear clockwise, and install a service bolt.

SST 09960–10010 (09962–01000, 09963–00500)

(e) Align the gear teeth of the drive gear and sub–gear, and tighten the service bolt.

5. INSTALL CAMSHAFTS

NOTICE:

Since the thrust clearance of the camshaft is small, the camshaft must be kept level while it is being installed. If the camshaft is not kept level, the portion of the cylinder head receiving the shaft thrust may crack or be damaged, causing the camshaft to seize or break. To avoid this, the following steps should be carried out.

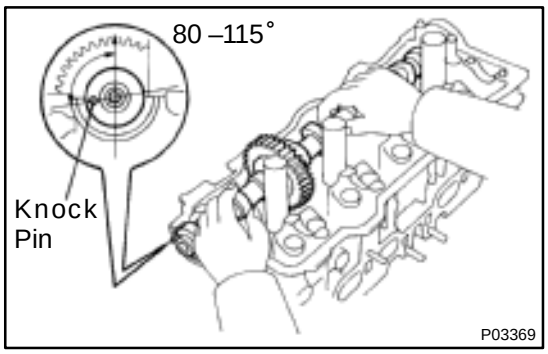

(a) Install the intake camshaft.
(1) Apply MP grease to the thrust portion of the camshaft.
(2) Place the intake camshaft at 80 – 115° BTDC of camshaft angle on the cylinder head.

HINT:
The above angle arrows the No.1 and No.3 cylinder cam lobes of the intake camshaft to push their valve lifters evenly.

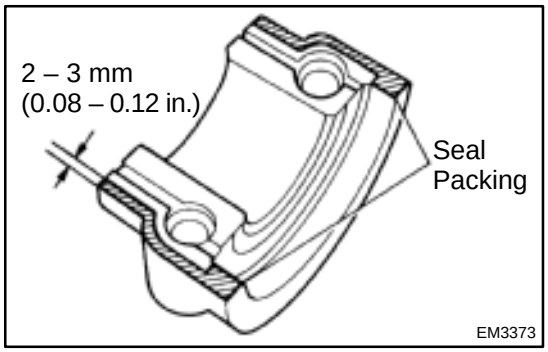

(3) Apply seal packing to the No.1 bearing cap as shown.
Seal packing: Part No. 08826–00080 or equivalent

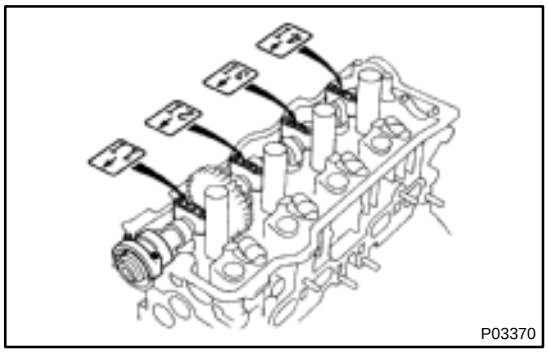

(4) Install the bearing caps in their proper locations.

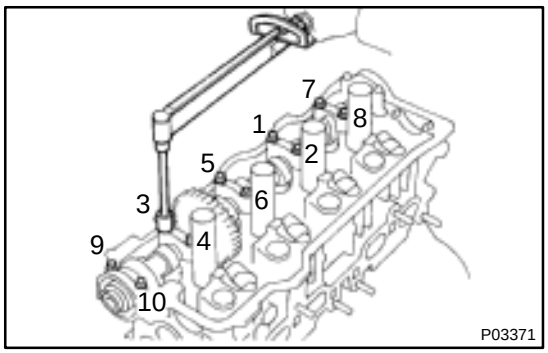

(5) Apply a light coat of engine oil on the threads and under the heads of the bearing cap bolts.
(6) Install and uniformly tighten the 10 bearing cap bolts in several passes, in the sequence shown.
Torque: 19 N·m (190 kgf·cm, 14 ft·lbf)

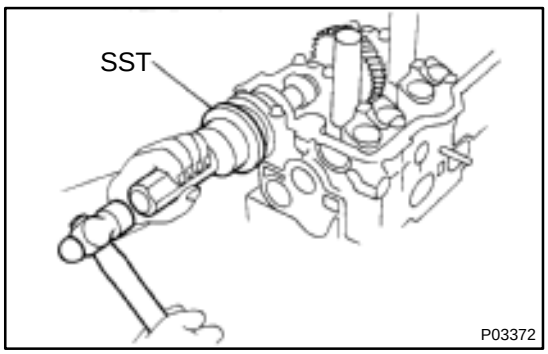

(7) Apply MP grease to a new oil seal lip.
(8) Using SST and a hammer, tap in the oil seal.
SST 09223–46011

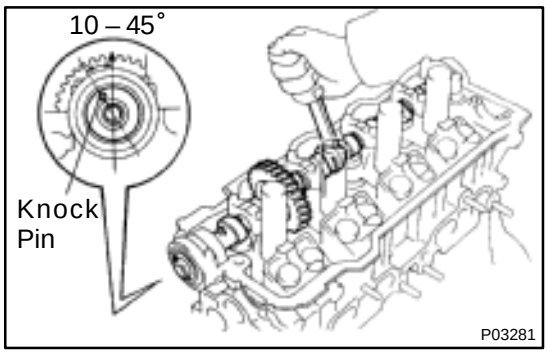

(b) Install the exhaust camshaft.

(1) Set the knock pin of the intake camshaft at 10 – 45° BTDC of camshaft angle.

HINT:

The above angle allows the No.2 and No.4 cylinder cam lobes of the exhaust camshaft to push their valve lifters evenly.

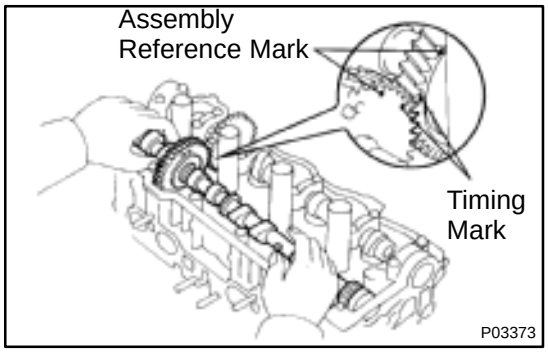

(2) Apply MP grease to the thrust portion of the camshaft.

(3) Engage the exhaust camshaft gear to the intake camshaft gear by matching the timing marks on each gear.

(4) Roll down the exhaust camshaft onto the bearing journals while engaging gears with each other.

NOTICE:

There are also assembly reference marks on each gear as shown in the illustration. Do not use these marks.

(5) Turn the intake camshaft clockwise or counterclockwise a little until the exhaust camshaft sits in the bearing journals evenly without rocking the camshaft on the bearing journals.

NOTICE:

It is very important to replace the camshaft in the bearing journals evenly while tightening bearing caps in the subsequent steps.

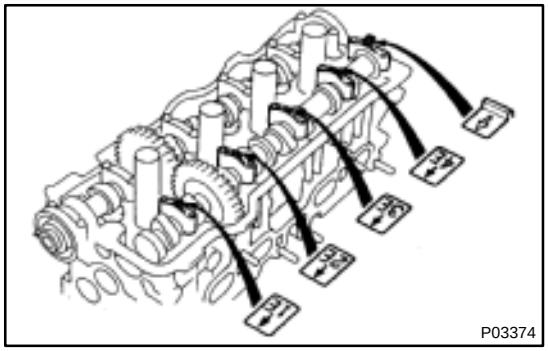

(6) Install the bearing caps in their proper locations.

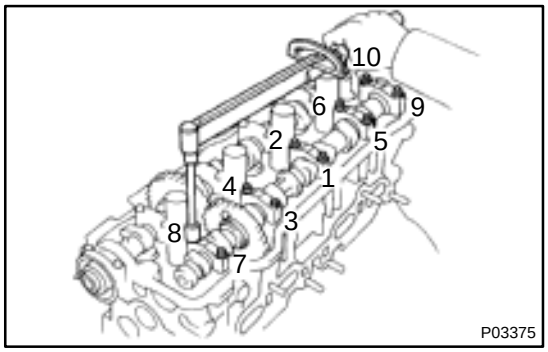

(7) Apply a light coat of engine oil on the threads and under the heads of the bearing cap bolts.

(8) Install and uniformly tighten the 10 bearing cap bolts in several passes, in the sequence shown.

Torque: 19 N·m (190 kgf·cm, 14 ft·lbf)

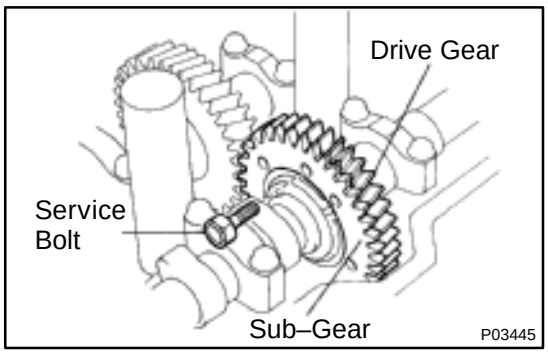

(9) Remove the service bolt.

6. CHECK AND ADJUST VALVE CLEARANCE (See page EM–4)

Turn the camshaft and position the cam lobe upward, and inspect and adjust the valve clearance.

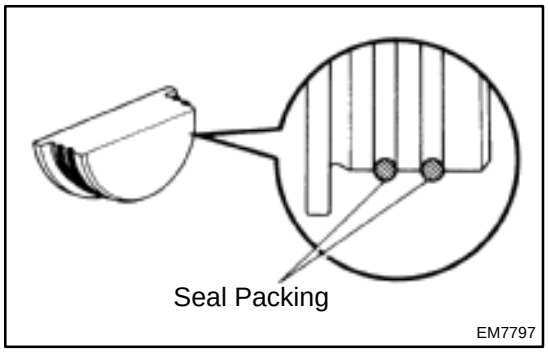

7. INSTALL SEMI–CIRCULAR PLUGS

(a) Remove any old packing (FIPG) material.

(b) Apply seal packing to the semi–circular plug grooves.
Seal packing: Part No. 08826–00080 or equivalent

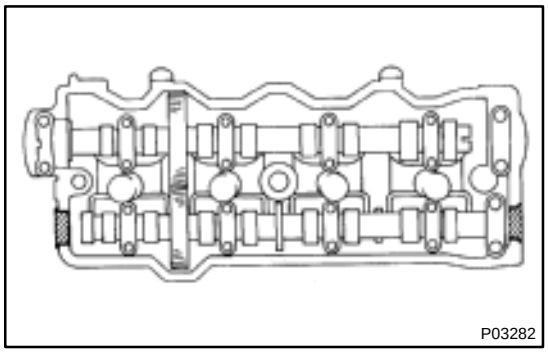

(c) Install the 2 semi–circular plugs to the cylinder head.

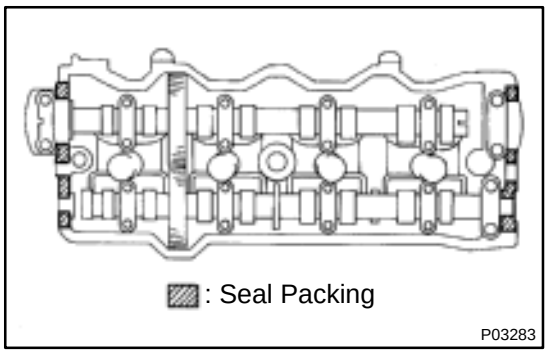

8. INSTALL CYLINDER HEAD COVER

(a) Remove any old packing (FIPG) material.

(b) Apply seal packing to the cylinder head as shown in the illustration.
Seal packing: Part No. 08826–00080 or equivalent

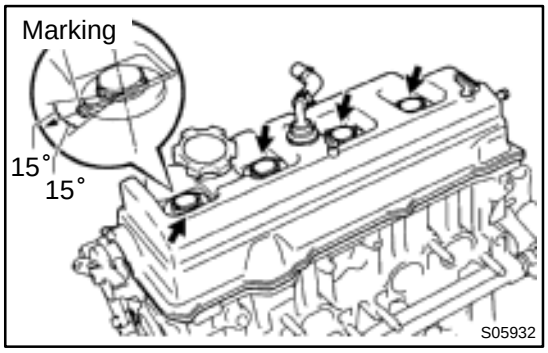

(c) Install the gasket to the head cover.

(d) Install the head cover with the 4 grommets and nuts. Uniformly tighten the nuts in several passes.
Torque: 44 N·m (450 kgf·cm, 33 ft·lbf)

HINT:
Install the grommets so that their markings are as shown in the illustration.

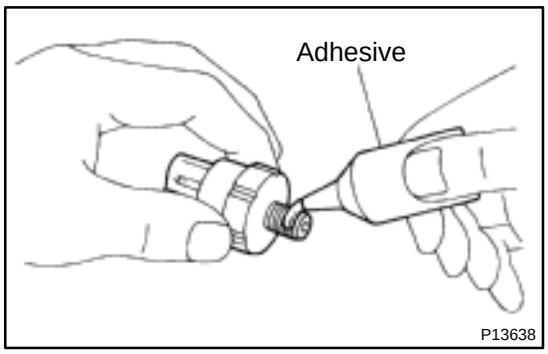

9. INSTALL OIL PRESSURE SWITCH

(a) Apply adhesive to 2 or 3 threads.
Adhesive:
Part No. 08833–00080, THREE BOND 1324 or equivalent

(b) Install the oil pressure switch.

10. INSTALL ENGINE HANGERS AND GENERATOR BRACKET

(a) Install the generator bracket and RH engine hanger assembly with the 3 bolts.
Torque: 42 N·m (425 kgf·cm, 31 ft·lbf)

(b) Install the LH engine hanger with the bolt.
Torque: 25 N·m (250 kgf·cm, 18 ft·lbf)

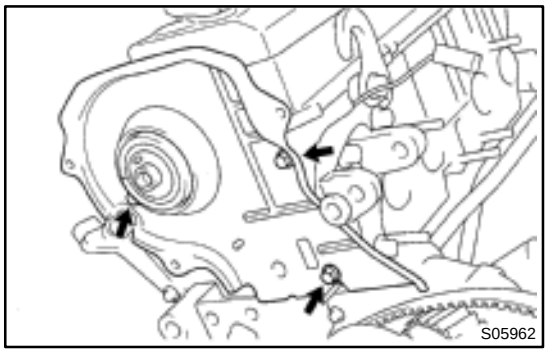

11. INSTALL NO.3 TIMING BELT COVER

Install the timing belt cover with the 3 bolts.
Torque: 7.8 N·m (80 kgf·cm, 69 in.·lbf)

12. TEMPORARILY INSTALL NO.1 IDLER PULLEY AND TENSION SPRING (See page EM–23)

13. INSTALL CAMSHAFT TIMING PULLEY (See page EM–23)

14. CONNECT TIMING BELT TO CAMSHAFT TIMING PULLEY (See page EM–23)

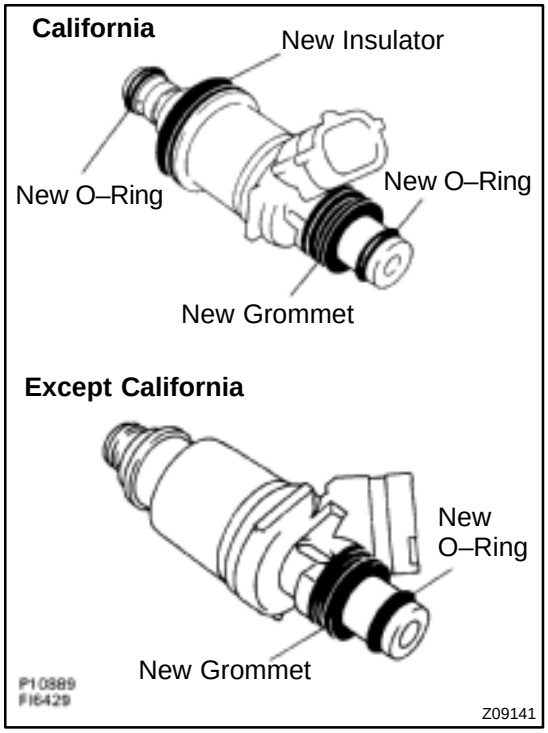

15. INSTALL INJECTORS AND DELIVERY PIPE

(a) California:
Install a new insulator and grommet to each injector.

(b) Except California:
Install a new grommet to each injector.

(c) California:
Apply a light coat of gasoline onto 2 new O–rings, and install them to each injector.

(d) Except California:
Apply a light coat of gasoline onto a new O–ring, and install it to each injector.

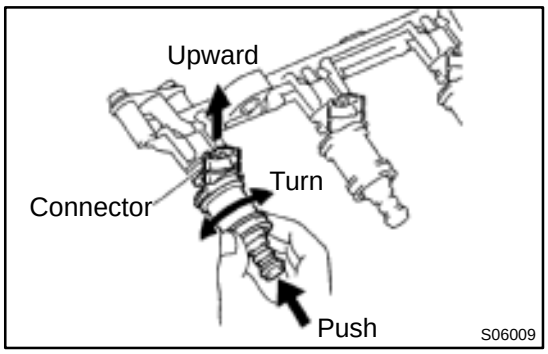

(e) While turning the injector clockwise and counterclockwise, push it to the delivery pipe. Install the 6 injectors.
(f) Position the injector connector upward.

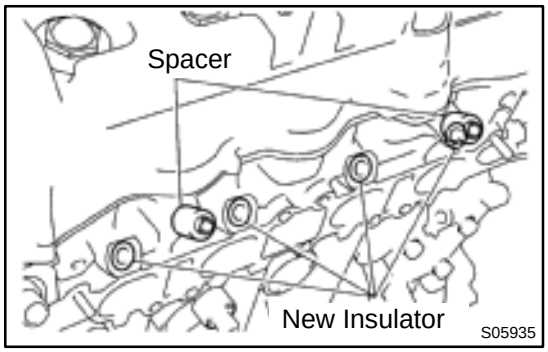

(g) Install the 2 spacers and 4 new insulators (Except California) to the cylinder head.

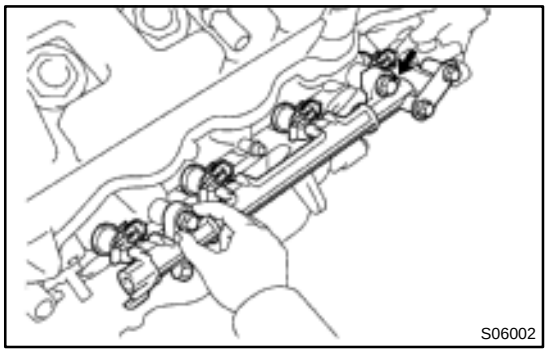

(h) Attach the 4 injectors together with the delivery pipe to the cylinder head.
(i) Temporarily install the 2 bolts holding the delivery pipe to the cylinder head.

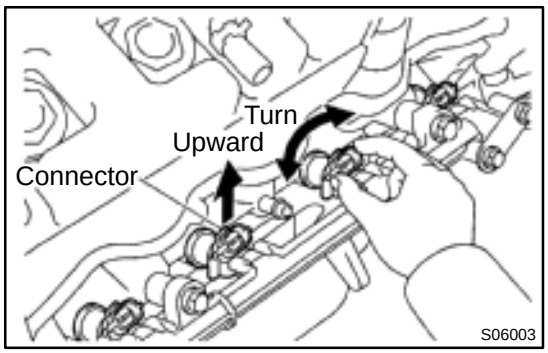

(j) Check that the injectors rotate smoothly.

HINT:

If injectors do not rotate smoothly, the probable cause is incorrect installation of O–rings. Replace the O–rings.

(k) Position the injector connector upward.

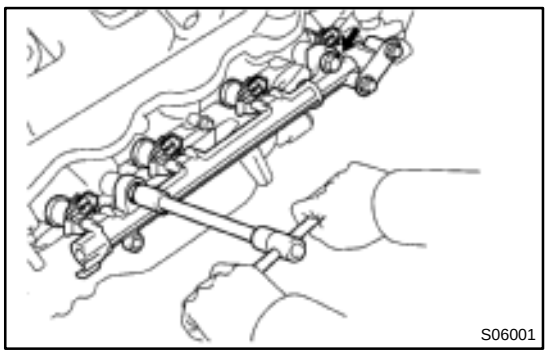

(l) Tighten the 2 bolts holding the delivery pipe to the cylinder head.
Torque: 13 N·m (130 kgf·cm, 9 ft·lbf)

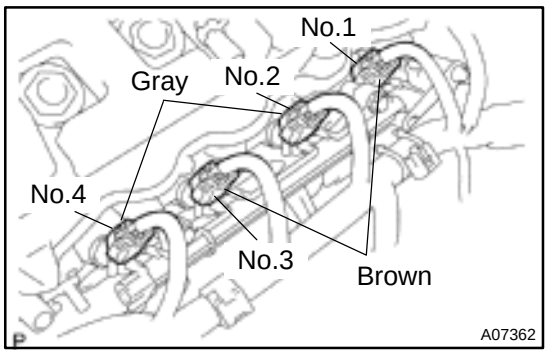

(m) Connect the 4 injector connectors.

HINT:

The No.1 and No.3 injector connectors are brown, and the No.2 and No.4 injector connectors are gray.

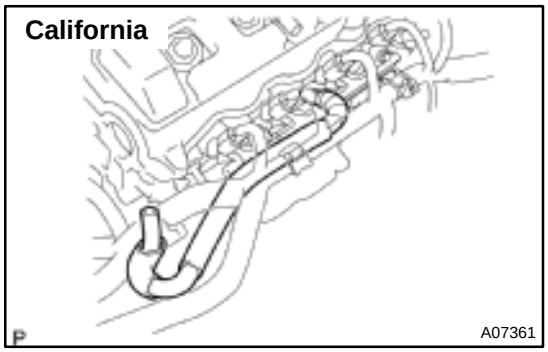

16. California:
INSTALL AIR HOSE FOR AIR ASSIST SYSTEM

Connect the air hose to the cylinder head port.

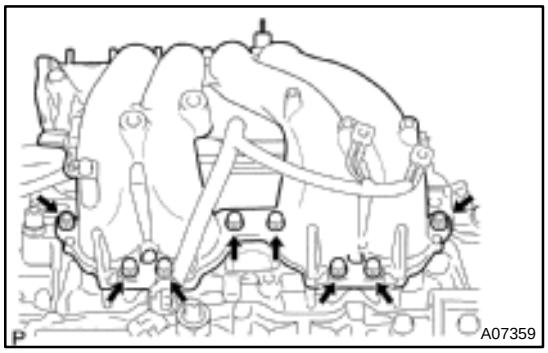

17. INSTALL INTAKE MANIFOLD

(a) Install a new gasket and the intake manifold with the 6 bolts and 2 nuts. Uniformly tighten the bolts and nuts in several passes.
Torque: 19 N·m (195 kgf·cm, 14 ft·lbf)

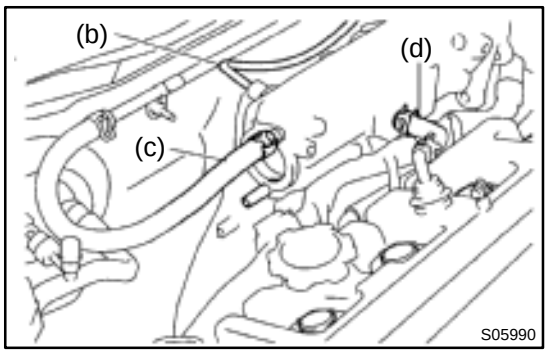

(b) Connect the MAP sensor vacuum hose to the gas filter.
(c) Connect the brake booster vacuum hose to the intake manifold.
(d) Connect the PCV hose to the intake manifold.

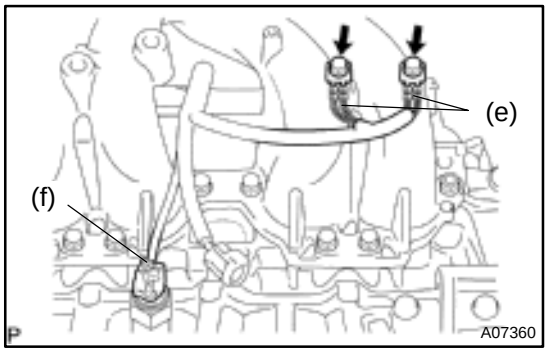

(e) Connect the 2 ground wires to the intake manifold with the 2 bolts.
(f) Connect the knock sensor 1 connector.

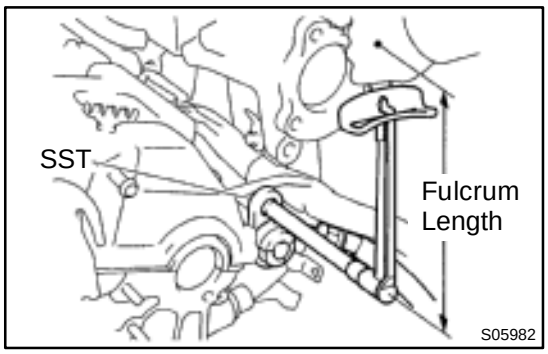

18. CONNECT FUEL INLET HOSE TO DELIVERY PIPE

(a) Temporarily connect the fuel inlet hose with 2 new gaskets and fuel pulsation damper.

(b) Using SST, tighten the fuel pulsation damper.
SST 09612–24014 (09617–24011)
Torque:
34 N·m (350 kgf·cm, 25 ft·lbf)
29 N·m (300 kgf·cm, 21 ft·lbf) for use with SST

HINT:
Use a torque wrench with a fulcrum length of 30 cm (1.181 in.).

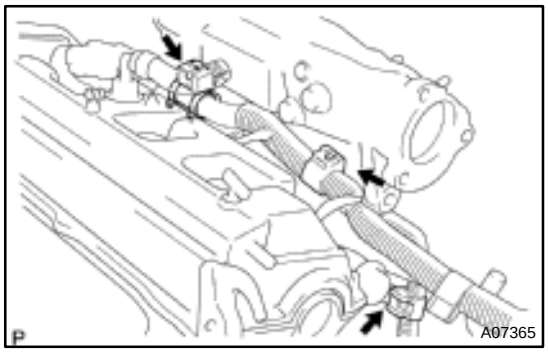

19. INSTALL ENGINE WIRE

(a) Install the 2 engine wire clamps to the 2 brackets on the front side of the intake manifold.

(b) Install the engine wire clamp to the bracket on the LH side of the intake manifold.

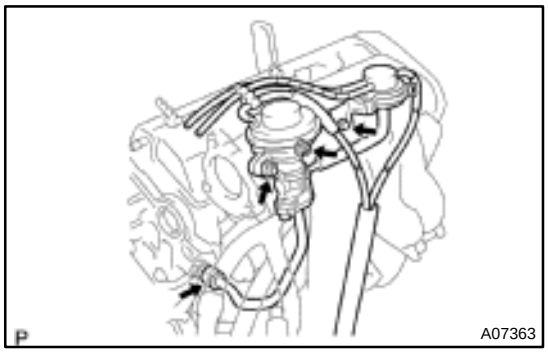

20. INSTALL EGR VALVE AND VACUUM MODULATOR

(a) Install a new gasket, the EGR valve, EGR pipe and vacuum modulator assembly with the union nut, 2 nuts and bolt.
Torque:
13.3 N·m (136 kgf·cm, 10 ft·lbf) for nut
61.2 N·m (624 kgf·cm, 45 ft·lbf) for union nut

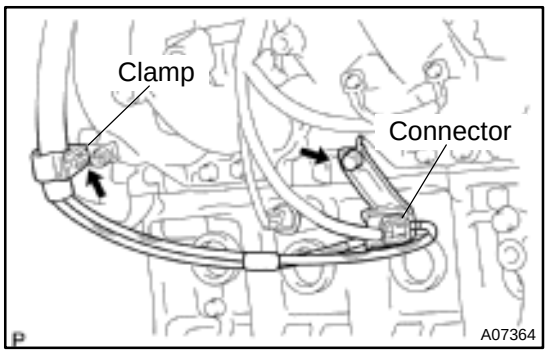

(b) Install the hose clamp to the bracket on the intake manifold.

(c) Install the VSV for the EGR with the bolt.

(d) Connect the VSV connector for the EGR.

21. INSTALL INTAKE MANIFOLD STAY

Install the intake manifold stay with the bolt and nut.
Torque: 39 N·m (398 kgf·cm, 29 ft·lbf)

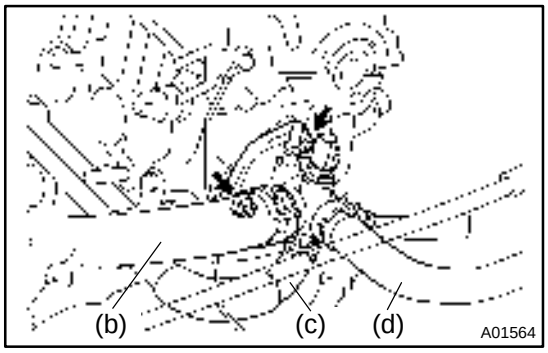

22. INSTALL WATER OUTLET

(a) Install a new gasket and the water outlet with the 2 nuts.
Torque: 15 N·m (150 kgf·cm, 11 ft·lbf)

(b) Connect the radiator hose to the water outlet.

(c) Connect the water bypass pipe hose to the water outlet.

(d) Connect the heater water hose to the water outlet.

(e) Connect the ECT sensor connector.

(f) Connect the ECT sender gauge connector.

23. CONNECT OIL PRESSURE SWITCH CONNECTOR

24. CONNECT NOISE FILTER CONNECTOR

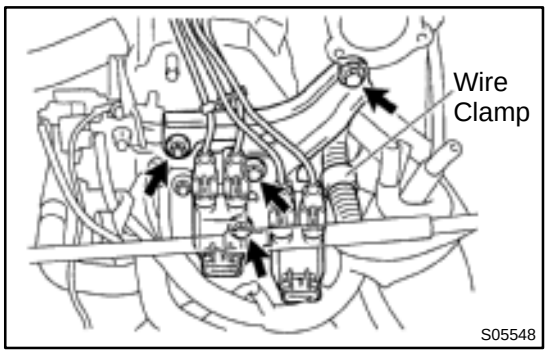

25. INSTALL IGNITION COILS AND NO.2 INTAKE MANIFOLD STAY ASSEMBLY

(a) TMC Made:
Install the 2 ignition coils and manifold stay assembly with the 2 nuts and 2 bolts.
Torque:
21 N·m (214 kgf·cm, 15 ft·lbf) for 12 mm head
42 N·m (428 kgf·cm, 31 ft·lbf) for 14 mm head

(b) TMMK Made:
Install the 2 ignition coils and manifold stay assembly with the nut and 3 bolts.
Torque:
21 N·m (214 kgf·cm, 15 ft·lbf) for 12 mm head
42 N·m (428 kgf·cm, 31 ft·lbf) for 14 mm head

(c) Install the wire clamp to the manifold stay.

(d) Connect the 4 high–tension cords to the spark plugs.

(e) Install the 4 high–tension cords to the 2 clamps on the cylinder head cover.

(f) Connect the 2 ignition coil connectors.

26. INSTALL THROTTLE BODY (See page SF–34)

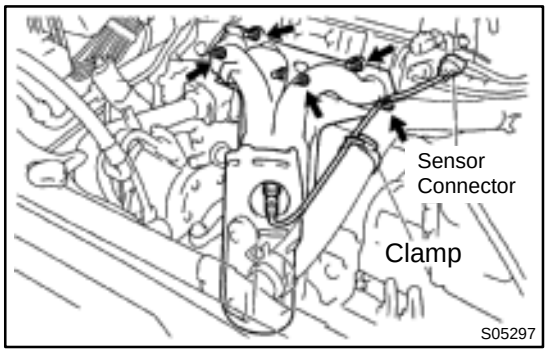

27. INSTALL EXHAUST MANIFOLD

(a) California:
Install the A/F sensor connector for the wiring side to the bracket to the LH engine hanger.

(b) Except California:
Install the heated oxygen sensor for the wiring side to the bracket to the LH engine hanger.

(c) Attach the exhaust manifold to the front exhaust pipe.

(d) Install a new gasket, the exhaust manifold, No.2 and No.3 exhaust manifold heat insulators assembly with the 6 nuts. Uniformly tighten the nuts in several passes.
Torque: 49 N·m (500 kgf·cm, 36 ft·lbf)

(e) Install the wire clamp.

(f) California:
Connect the A/F sensor connector.

(g) Except California:
Connect the heated oxygen sensor (bank 1 sensor 1) connector.

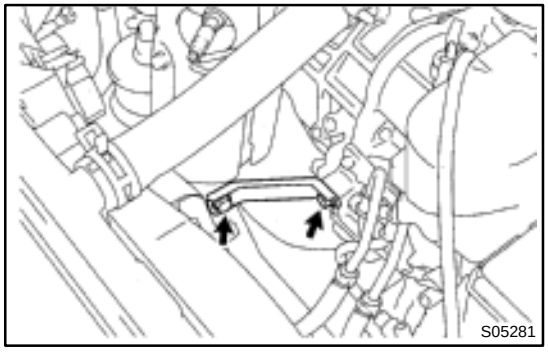

(h) Install the No.1 exhaust manifold stay with the 2 bolts.
Torque: 42 N·m (425 kgf·cm, 31 ft·lbf)

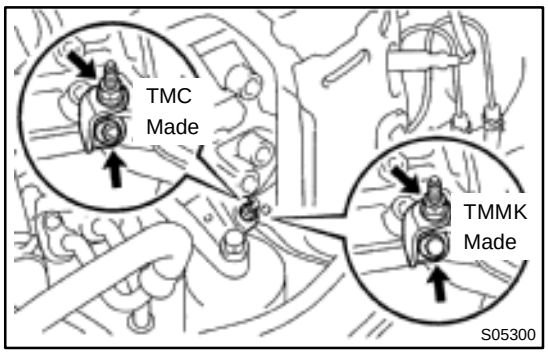

(i) TMC Made:
Install the No.2 exhaust manifold stay with the 2 nuts.
Torque:
42 N·m (425 kgf·cm, 31 ft·lbf) for manifold side
58 N·m (591 kgf·cm, 43 ft·lbf) for block side

(j) TMMK Made:
Install the No.2 exhaust manifold stay with the bolt and nut.
Torque:
42 N·m (425 kgf·cm, 31 ft·lbf) for manifold side
41.5 N·m (423 kgf·cm, 31 ft·lbf) for block side

(k) Install the No.1 exhaust manifold heat insulator with the 3 (California) or 5 (Except California) bolts.

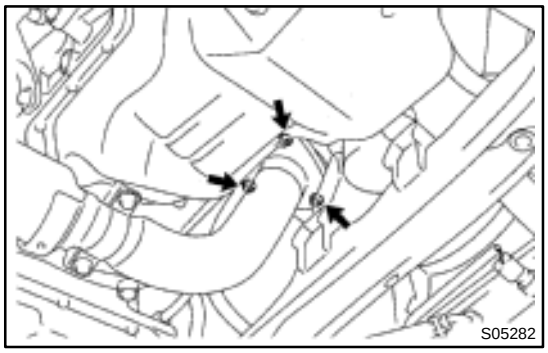

(l) Install 3 new nuts holding the front exhaust pipe to the exhaust manifold.
Torque: 62 N·m (630 kgf·cm, 46 ft·lbf)

28. INSTALL GENERATOR (See page CH–16)
29. INSTALL AIR CLEANER CASE (See page EM–75)
30. FILL WITH ENGINE COOLANT
31. START ENGINE AND CHECK FOR LEAKS
32. RECHECK ENGINE COOLANT LEVEL AND OIL LEVEL

ENGINE UNIT

COMPONENTS

EM0YV–01

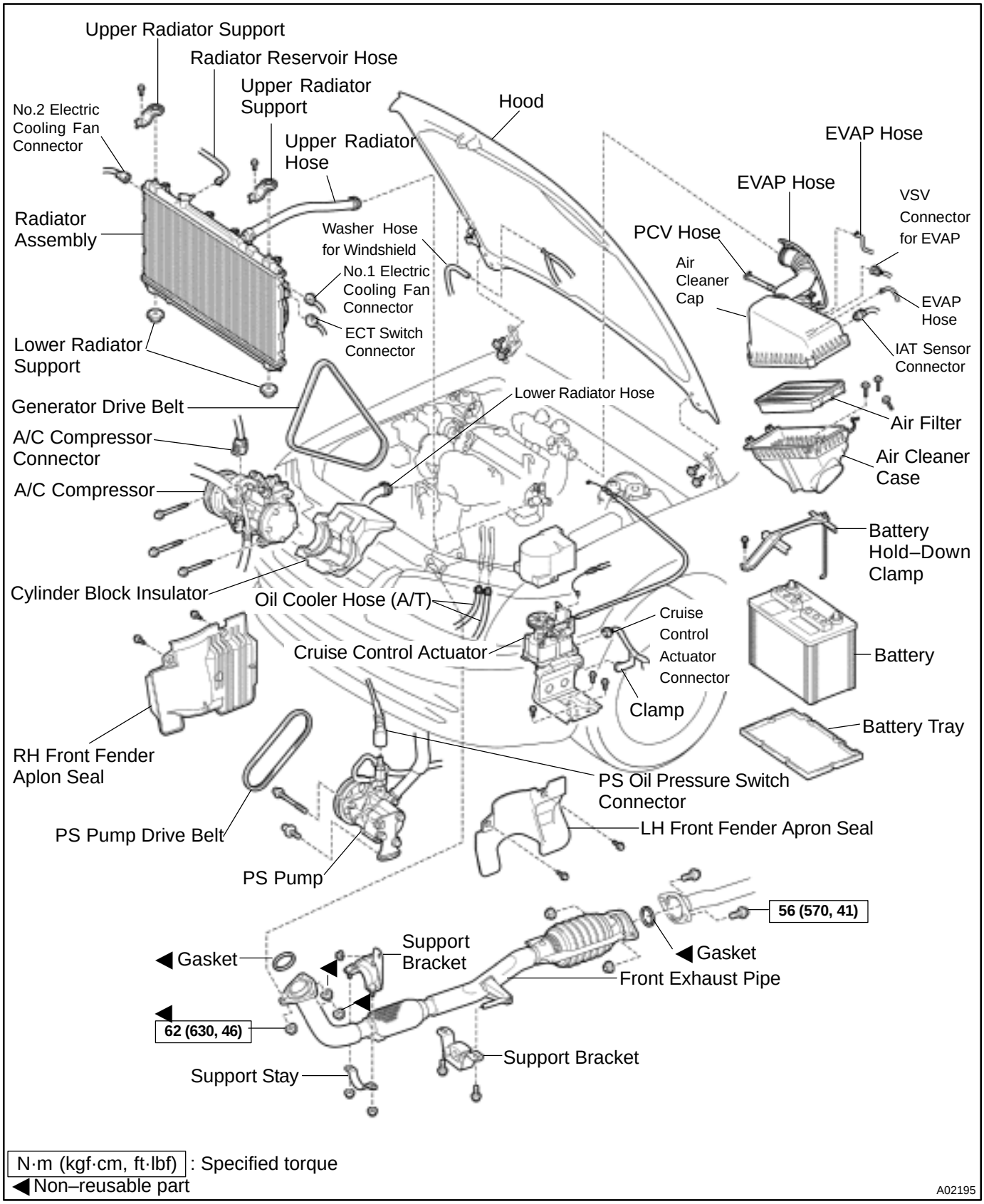

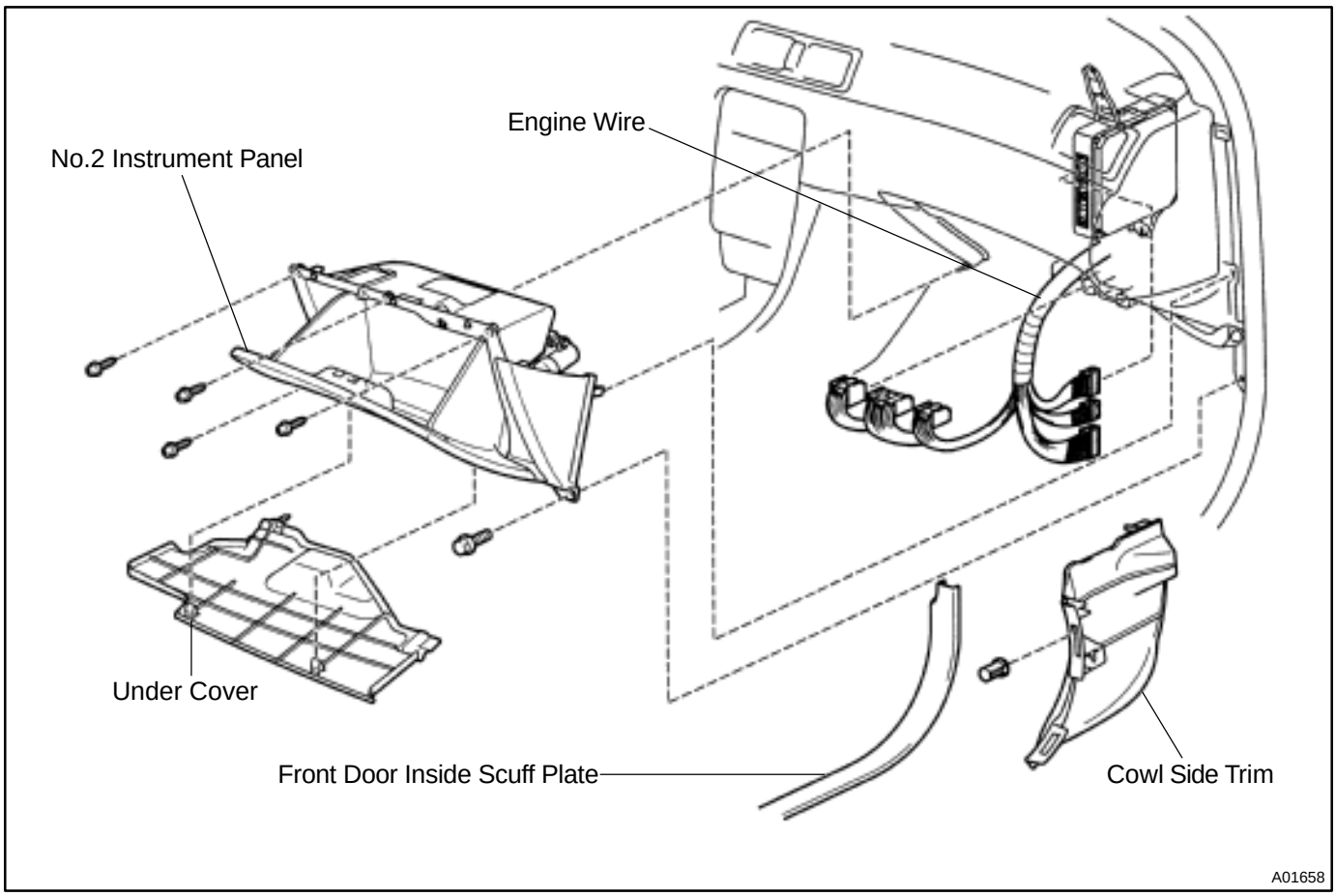
Engine Wire
No.2 Instrument Panel
Under Cover
Front Door Inside Scuff Plate
Cowl Side Trim
A01658

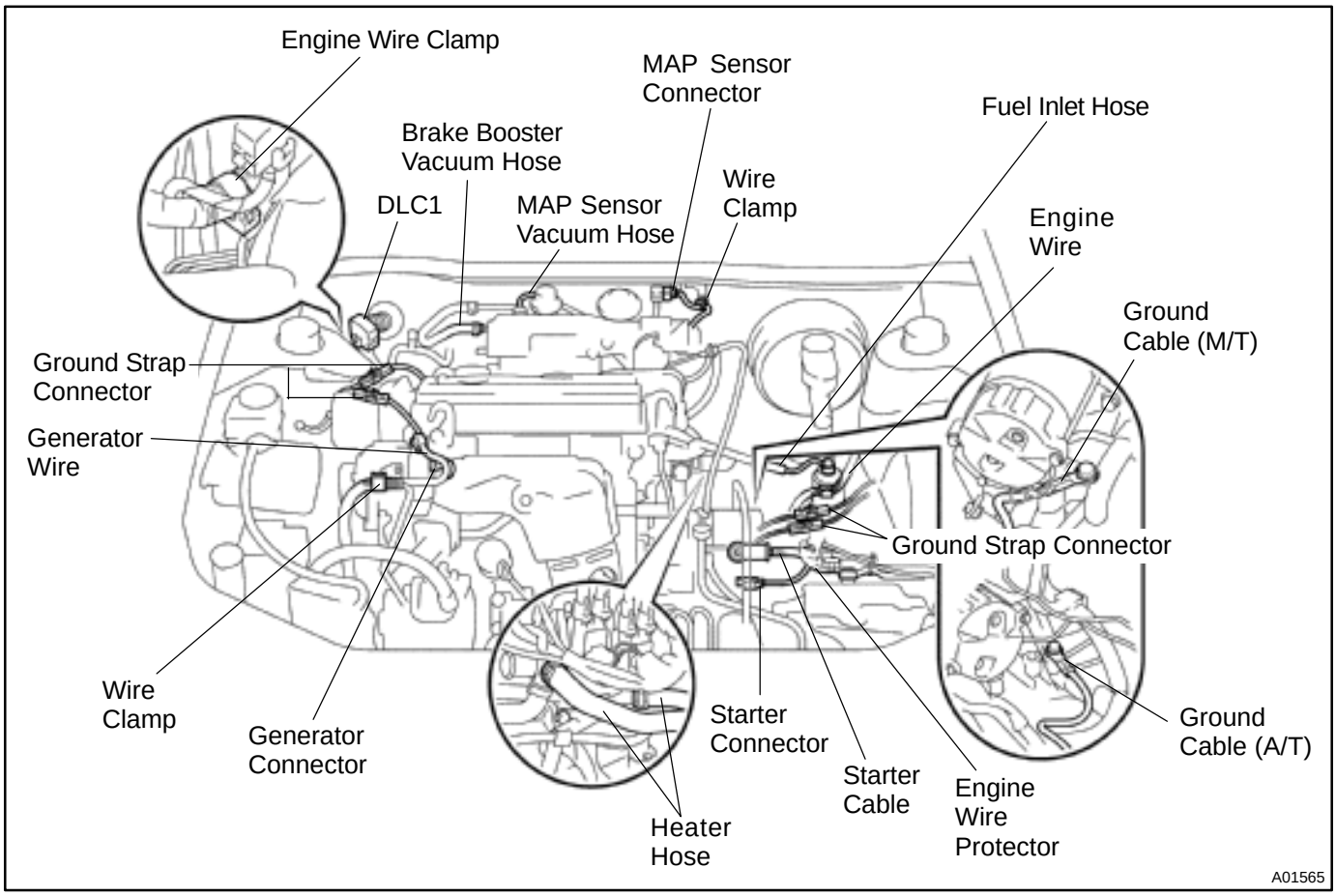
Engine Wire Clamp
MAP Sensor Connector
Fuel Inlet Hose
Brake Booster Vacuum Hose
DLC1
MAP Sensor Vacuum Hose
Wire Clamp
Engine Wire
Ground Cable (M/T)
Ground Strap Connector
Generator Wire
Ground Strap Connector
Wire Clamp
Generator Connector
Starter Connector
Starter Cable
Engine Wire Protector
Ground Cable (A/T)
Heater Hose
A01565

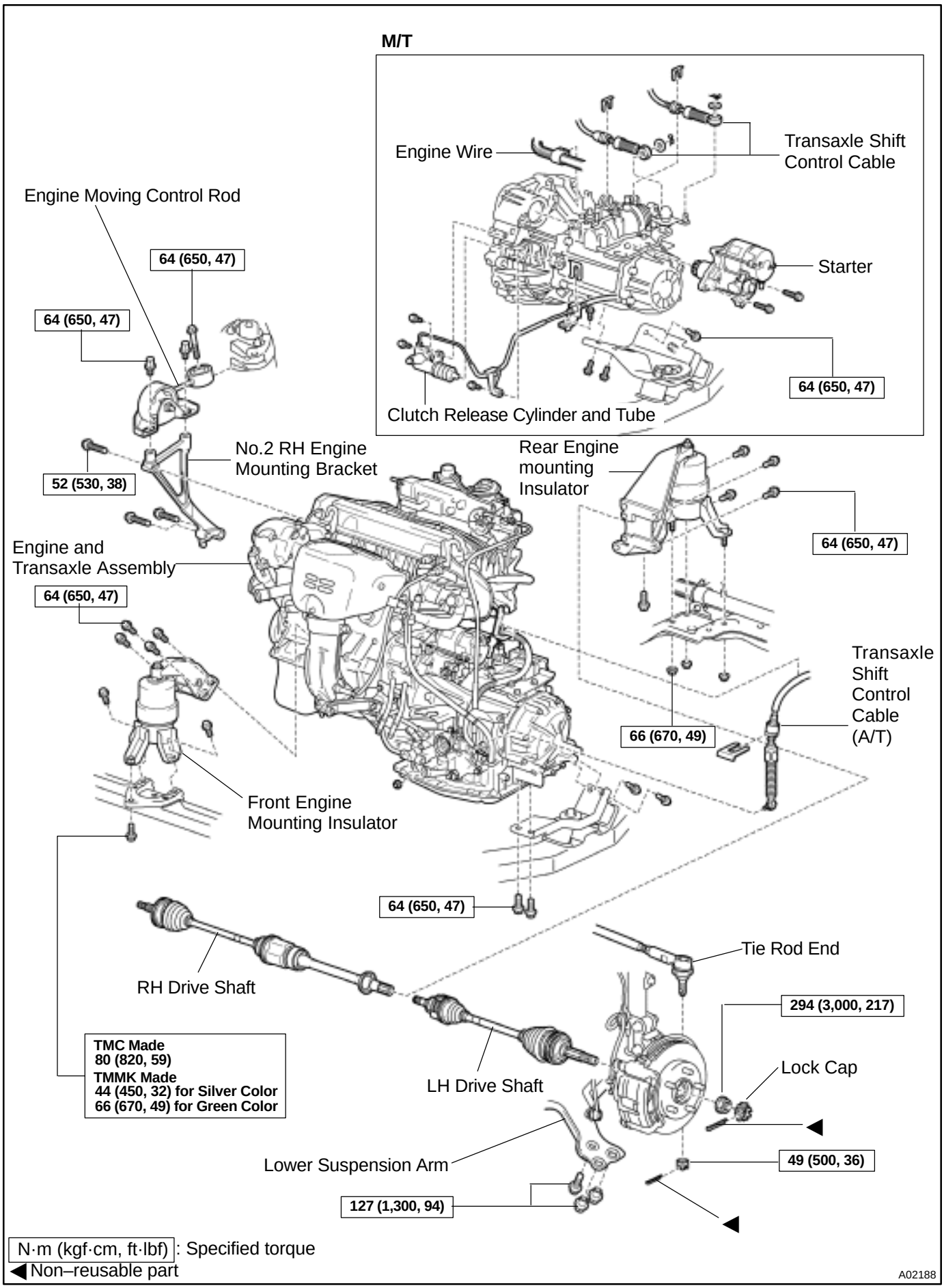
M/T
Engine Wire
Transaxle Shift Control Cable
Starter
64 (650, 47)
Clutch Release Cylinder and Tube
Engine Moving Control Rod
64 (650, 47)
64 (650, 47)
52 (530, 38)
No.2 RH Engine Mounting Bracket
Rear Engine mounting Insulator
64 (650, 47)
Engine and Transaxle Assembly
64 (650, 47)
Transaxle Shift Control Cable (A/T)
66 (670, 49)
Front Engine Mounting Insulator
64 (650, 47)
Tie Rod End
RH Drive Shaft
294 (3,000, 217)
TMC Made
80 (820, 59)
TMMK Made
44 (450, 32) for Silver Color
66 (670, 49) for Green Color
LH Drive Shaft
Lock Cap
Lower Suspension Arm
49 (500, 36)
127 (1,300, 94)
N·m (kgf·cm, ft·lbf): Specified torque
◀ Non–reusable part
A02188

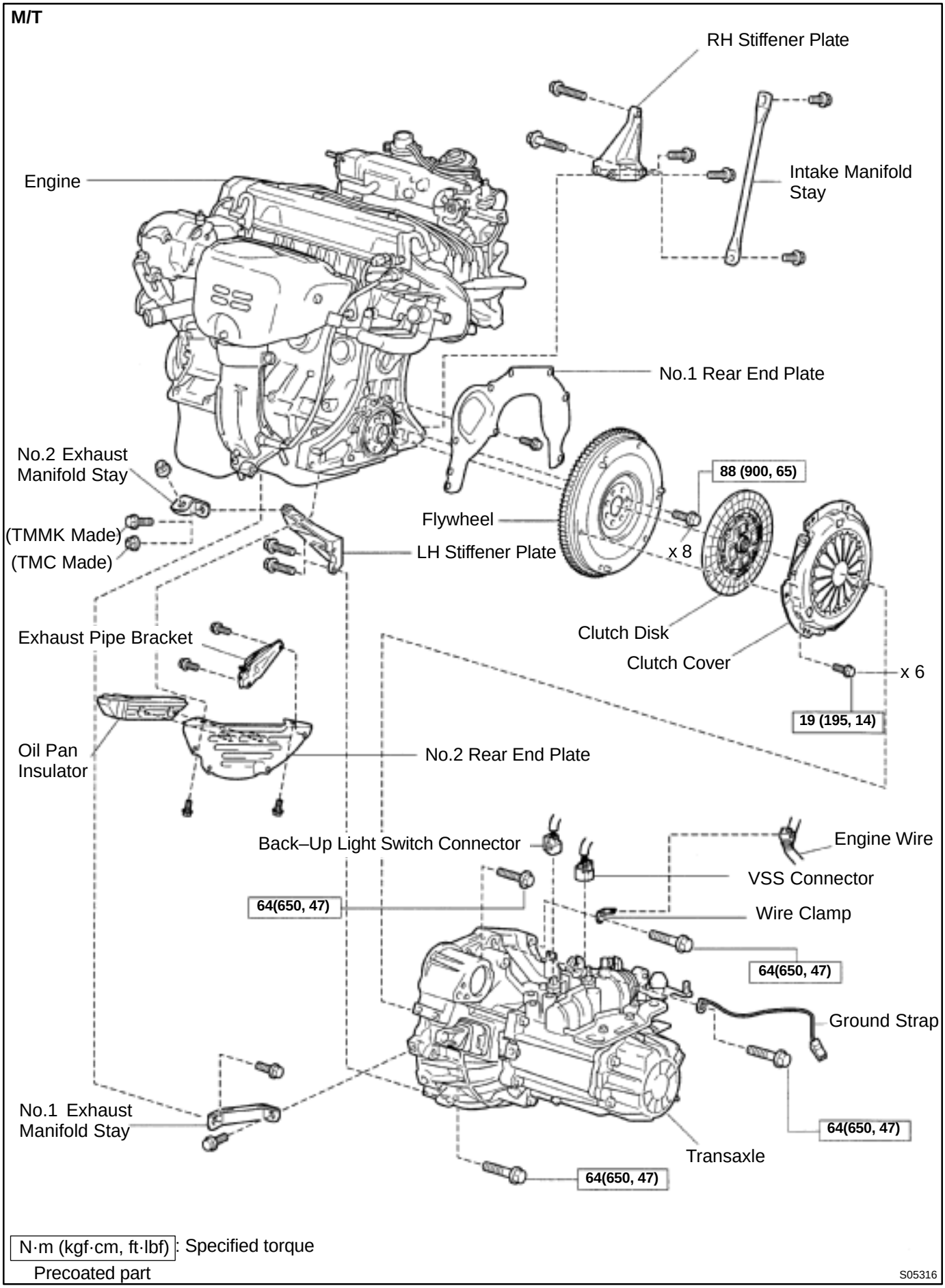
M/T
RH Stiffener Plate
Engine
Intake Manifold Stay
No.1 Rear End Plate
No.2 Exhaust Manifold Stay
(TMMK Made)
(TMC Made)
LH Stiffener Plate
Flywheel
88 (900, 65)
x 8
Clutch Disk
Clutch Cover
x 6
19 (195, 14)
Exhaust Pipe Bracket
Oil Pan Insulator
No.2 Rear End Plate
Back–Up Light Switch Connector
Engine Wire
VSS Connector
64(650, 47)
Wire Clamp
64(650, 47)
Ground Strap
No.1 Exhaust Manifold Stay
64(650, 47)
Transaxle
64(650, 47)
N·m (kgf·cm, ft·lbf): Specified torque
Precoated part
S05316

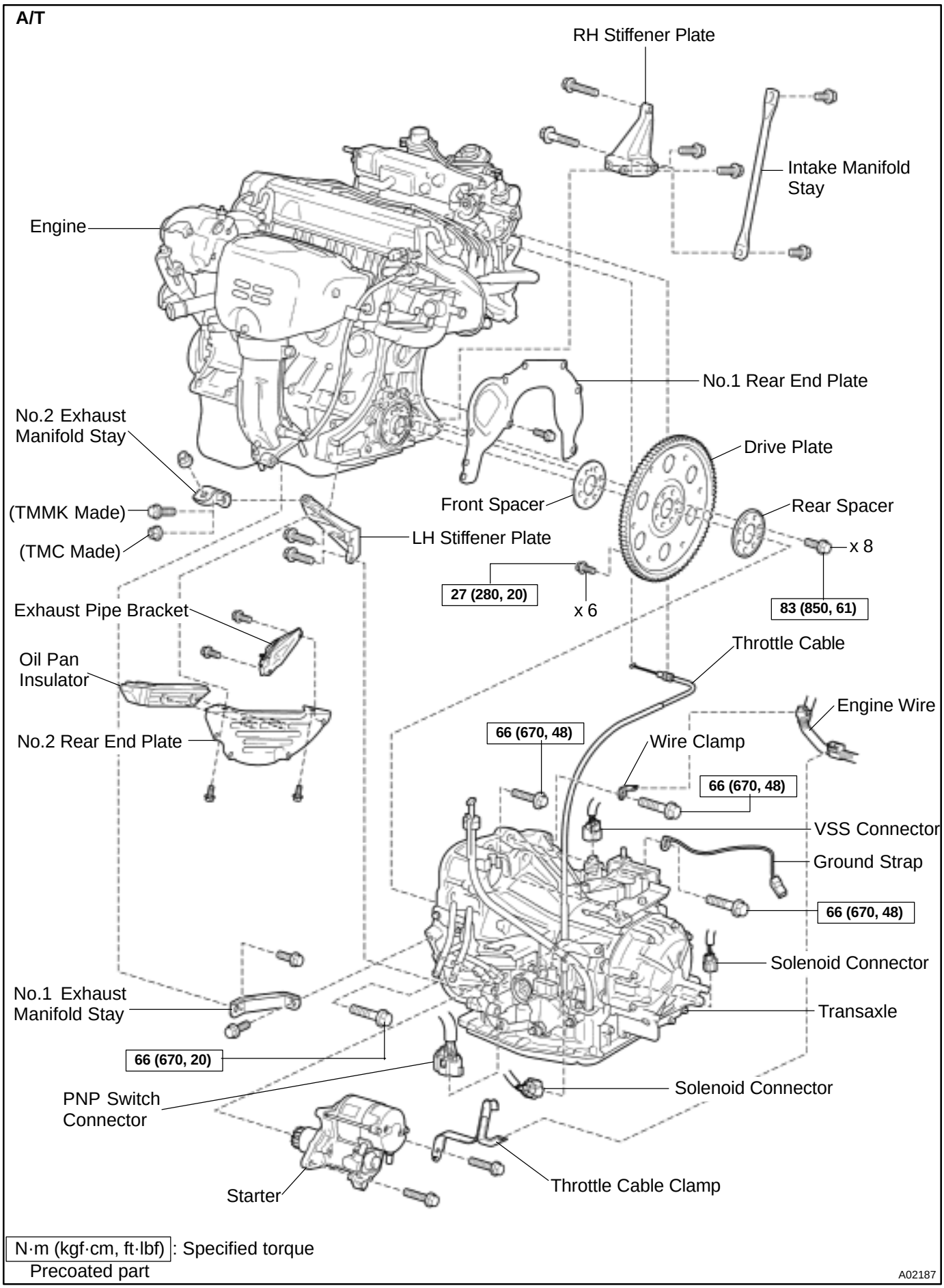
A/T
RH Stiffener Plate
Intake Manifold Stay
Engine
No.1 Rear End Plate
No.2 Exhaust Manifold Stay
Drive Plate
(TMMK Made)
(TMC Made)
Front Spacer
Rear Spacer
LH Stiffener Plate
x 8
27 (280, 20)
x 6
83 (850, 61)
Exhaust Pipe Bracket
Throttle Cable
Oil Pan Insulator
Engine Wire
66 (670, 48)
Wire Clamp
No.2 Rear End Plate
66 (670, 48)
VSS Connector
Ground Strap
66 (670, 48)
Solenoid Connector
No.1 Exhaust Manifold Stay
Transaxle
66 (670, 20)
Solenoid Connector
PNP Switch Connector
Throttle Cable Clamp
Starter
N·m (kgf·cm, ft·lbf): Specified torque
Precoated part
A02187

EM08F–04

REMOVAL

1. REMOVE HOOD
2. REMOVE FRONT FENDER APRON SEALS
3. DRAIN ENGINE COOLANT
4. DRAIN ENGINE OIL
5. DISCONNECT ACCELERATOR CABLE
6. REMOVE AIR CLEANER CAP
(a) Disconnect the IAT sensor connector.
(b) Disconnect the VSV connector for the EVAP
(c) Disconnect the PCV hose from the cylinder head cover.
(d) Disconnect the EVAP hose from the throttle body.
(e) Disconnect the EVAP hose from the VSV.
(f) Disconnect the 2 clamps, and disconnect the air cleaner cap from the air cleaner case.
(g) Loosen hose clamp, and disconnect the air cleaner hose from the throttle body.
(h) Remove the air cleaner cap and hose assembly.
7. REMOVE AIR CLEANER CASE
(a) Remove the air filter.
(b) Remove the 3 bolts and air cleaner case.
8. REMOVE BATTERY AND TRAY
9. REMOVE CRUISE CONTROL ACTUATOR
10. REMOVE RADIATOR (See page CO–18)

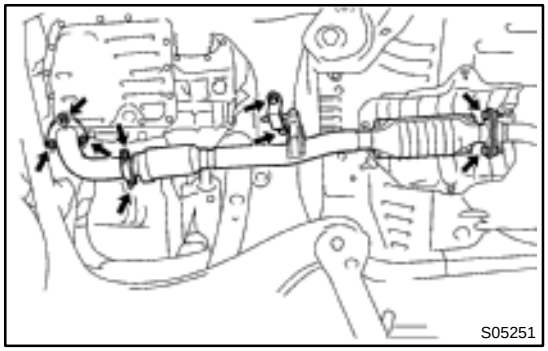
S05251

11. REMOVE FRONT EXHAUST PIPE
(a) Remove the 2 bolts holding the support stay to the support bracket.
(b) Remove the 2 bolts holding the support bracket to the front frame.
(c) Remove the 2 bolts and 2 nuts holding the front exhaust pipe to the center exhaust pipe.
(d) Remove the 3 nuts holding the front exhaust pipe to the exhaust manifold.
(e) Remove the front exhaust pipe and 2 gaskets.
(f) Remove the nut and support bracket.
12. DISCONNECT CONNECTORS, WIRES, CABLES, CLAMPS AND HOSES
(a) Disconnect the generator wire.
(b) Disconnect the generator connector.
(c) Disconnect the wire clamp from the generator.
(d) Disconnect the starter cable.
(e) Disconnect the starter connector.
(f) Disconnect the DLC1 from the bracket.

(g) Disconnect the engine wire clamp from the bracket on the RH fender apron.
(h) Disconnect the MAP sensor connector.
(i) Disconnect the wire clamp from the bracket for the MAP sensor.
(j) Disconnect the 2 ground strap connectors from the RH fender apron.
(k) Disconnect the 2 ground strap connectors from the LH fender apron.
(l) Disconnect the engine wire protector clamp from the battery bracket.
(m) Disconnect the engine wire from the clamp on the fuel filter.
(n) Disconnect the ground cable from the transaxle.
(o) Disconnect the brake booster vacuum hose from the intake manifold.
(p) Disconnect the heater hose from the water outlet.
(q) Disconnect the heater hose from the water bypass pipe.
(r) Disconnect the fuel inlet hose from the fuel filter.
(s) Disconnect the MAP sensor vacuum hose from the gas filter on the intake manifold.

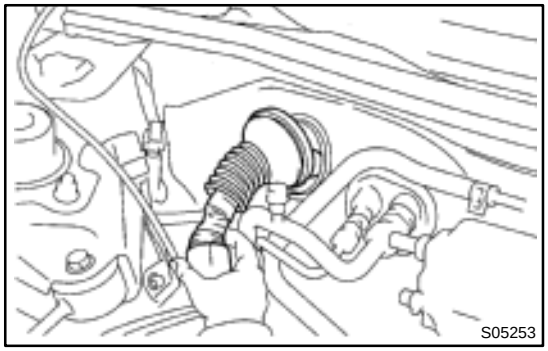
S05253

13. DISCONNECT ENGINE WIRE FROM CABIN
(a) Remove the under cover.
(b) Disconnect the 3 ECM connectors.
(c) Disconnect the 3 cowl wire connectors from the connectors on the bracket.
(d) Disconnect the grommet from the cowl panel, and pull out the engine wire.
14. REMOVE DRIVE SHAFTS (See page SA–17)
15. DISCONNECT TRANSAXLE CONTROL CABLE(S) FROM TRANSAXLE
16. M/T:
REMOVE STARTER (See page ST–5)
17. M/T:
DISCONNECT CLUTCH RELEASE CYLINDER AND TUBE FROM TRANSAXLE

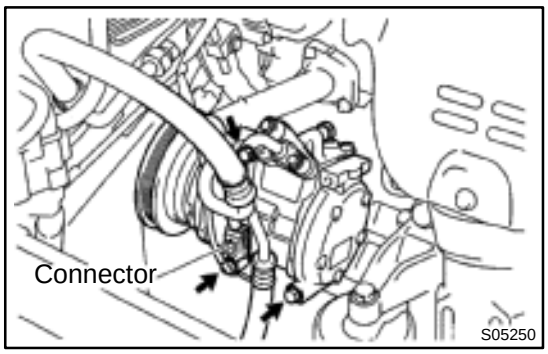

18. DISCONNECT A/C COMPRESSOR FROM ENGINE

(a) Disconnect the A/C compressor connector.
(b) Remove the drive belt.
(c) Remove the 3 bolts, and disconnect the A/C compressor from the engine.
(d) Remove the cylinder block insulator.

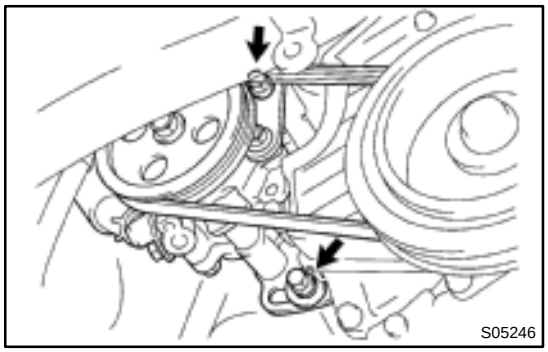

19. DISCONNECT PS PUMP FROM ENGINE

(a) Disconnect the PS oil pressure switch connector.
(b) Loosen the 2 bolts, and remove the drive belt.
(c) Remove the 2 bolts, and disconnect the PS pump from the engine.

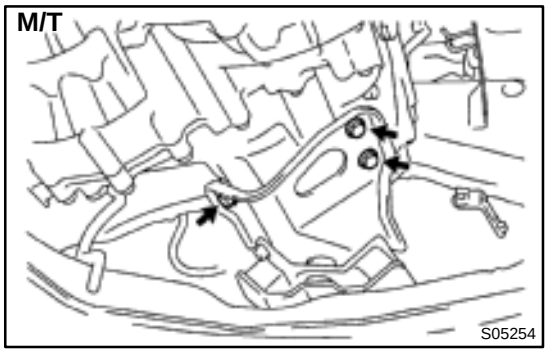

20. REMOVE BOLTS HOLDING TRANSAXLE TO LH ENGINE MOUNTING INSULATOR

M/T:
Remove the 3 bolts.

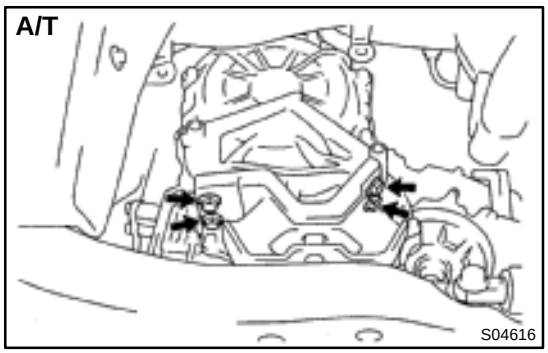

A/T:
Remove the 4 bolts.

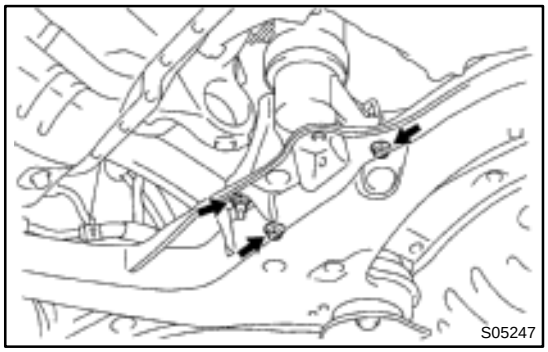

21. REMOVE NUTS HOLDING REAR ENGINE MOUNTING BRACKET TO FRONT FRAME

(a) Remove the 2 hole plugs.
(b) Remove the 3 nuts.

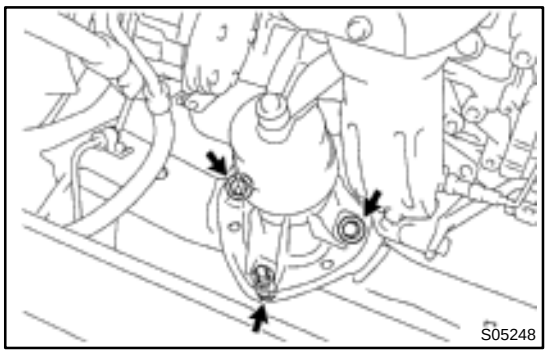

22. REMOVE BOLTS HOLDING FRONT ENGINE MOUNTING INSULATOR TO FRONT FRAME

Remove the 3 bolts.



23. ATTACH ENGINE SLING DEVICE TO ENGINE HANGERS

Attach the engine chain hoist to the engine hangers.

CAUTION:

Do not attempt to hang the engine by hooking the chain to any other part.

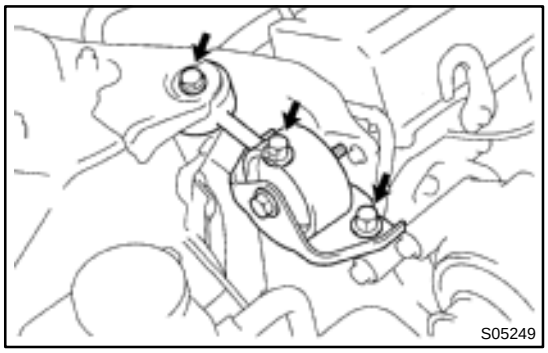

24. REMOVE ENGINE MOVING CONTROL ROD

Remove the 3 bolts and control rod.

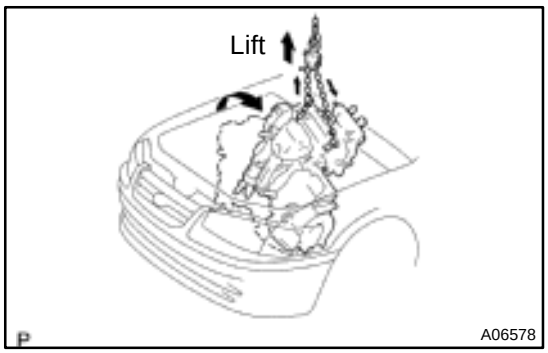

25. REMOVE ENGINE AND TRANSAXLE ASSEMBLY FROM VEHICLE

(a) Lift the engine out of the vehicle slowly and carefully.

NOTICE:

Make sure the engine is clear of all wiring, hoses and cables.

(b) Place the engine and transaxle assembly onto the stand.

26. REMOVE FRONT ENGINE MOUNTING INSULATOR FROM ENGINE

Remove the 4 bolts and mounting insulator.

27. REMOVE REAR ENGINE MOUNTING INSULATOR FROM ENGINE

Remove the 4 bolts, the mounting insulator.

28. REMOVE NO.2 RH ENGINE MOUNTING BRACKET FROM ENGINE

Remove the 3 bolts and mounting bracket.

29. A/T:

DISCONNECT THROTTLE CABLE FROM THROTTLE BODY

30. A/T:
REMOVE STARTER (See page ST–5)

31. DISCONNECT CONNECTORS

(a) Disconnect the VSS connector.

(b) M/T:
Disconnect the back–up light switch connector.

(c) A/T:
Disconnect the PNP switch connector.

(d) A/T:
Disconnect the 2 solenoid connectors.

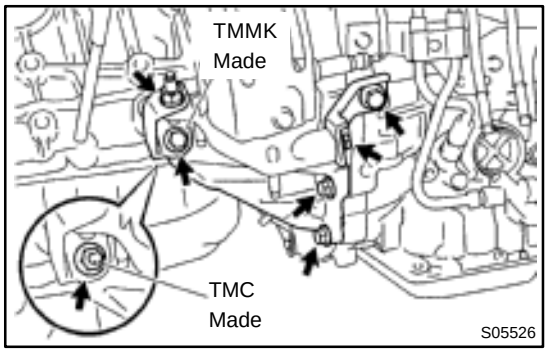

32. REMOVE NO.1 EXHAUST MANIFOLD STAY

Remove the 2 bolts and manifold stay.

33. REMOVE NO.2 EXHAUST MANIFOLD STAY AND LH STIFFENER PLATE

(a) TMC Made:
Remove the 2 nuts and manifold stay.

(b) TMMK Made:
Remove the bolt, nut and manifold stay.

(c) Remove the 2 bolts and stiffener plate.

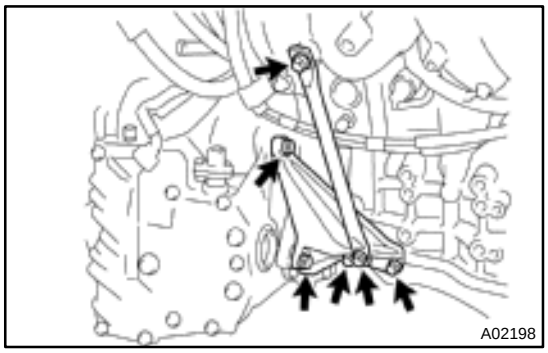

34. REMOVE INTAKE MANIFOLD STAY

Remove the 2 bolts and intake manifold stay.

35. REMOVE RH STIFFENER PLATE

Remove the 4 bolts and stiffener plate.

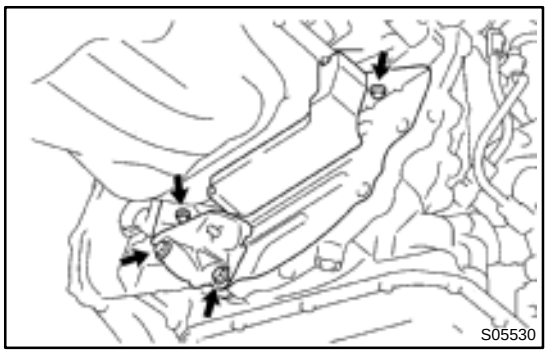

36. REMOVE EXHAUST PIPE BRACKET, OIL PAN INSULATOR AND NO.2 REAR END PLATE

(a) Remove the 2 bolts and exhaust pipe bracket.

(b) Remove the 2 bolts, oil pan insulator and rear end plate.

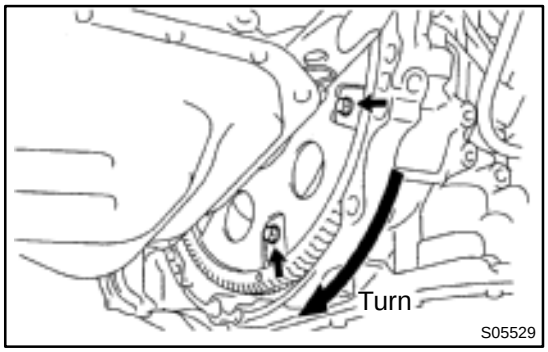

37. A/T:
REMOVE TORQUE CONVERTER CLUTCH BOLTS

(a) Turn the crankshaft pulley bolt to gain access to each bolt.

(b) Hold the crankshaft pulley bolt with a wrench, and remove the 6 bolts.

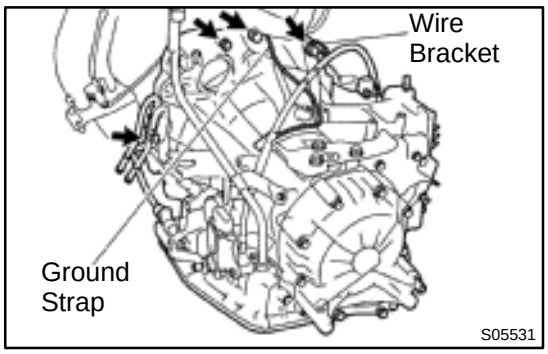

38. REMOVE TRANSAXLE

(a) Remove the 4 bolts, ground strap and wire bracket.

(b) Remove the transaxle together with the torque converter clutch (A/T) from the engine.

39. M/T:
REMOVE CLUTCH COVER AND DISC

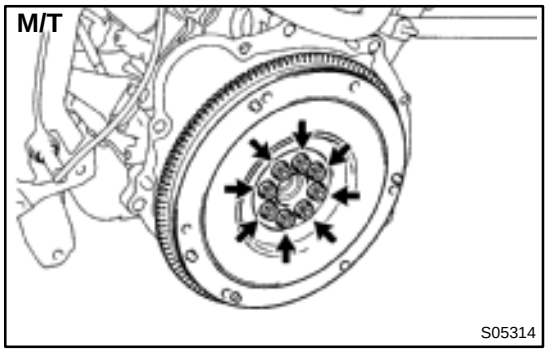

40. M/T:
REMOVE FLYWHEEL

Remove the 8 bolts and flywheel.

41. A/T:
REMOVE DRIVE PLATE

Remove the 8 bolts, front spacer, drive plate and rear spacer.

42. REMOVE NO.1 REAR END PLATE

Remove the bolt and end plate.

EM08G–04

INSTALLATION

1. INSTALL NO.1 REAR END PLATE

Install the end plate with the bolt.

Torque: 9.3 N·m (95 kgf·cm, 82 in.·lbf)

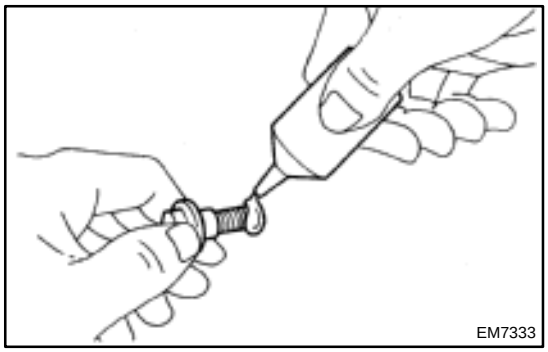

2. M/T:
INSTALL FLYWHEEL

(a) Apply adhesive to 2 or 3 threads of the bolt end.
Adhesive:
Part No. 08833–00070, THREE BOND 1324 or equivalent

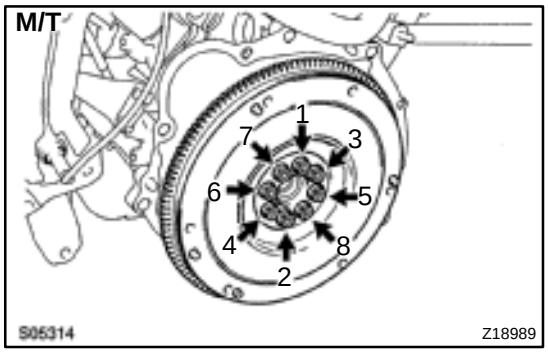

(b) Install the flywheel on the crankshaft.
(c) Install and uniformly tighten the 8 bolts in several passes, in the sequence shown.
Torque: 88 N·m (900 kgf·cm, 65 ft·lbf)

3. A/T:
INSTALL DRIVE PLATE (See step 2)
Torque: 83 N·m (850 kgf·cm, 61 ft·lbf)

4. M/T:
INSTALL CLUTCH DISC AND COVER

5. A/T:
CHECK TORQUE CONVERTER CLUTCH INSTALLATION (A140E: See page AX–25)

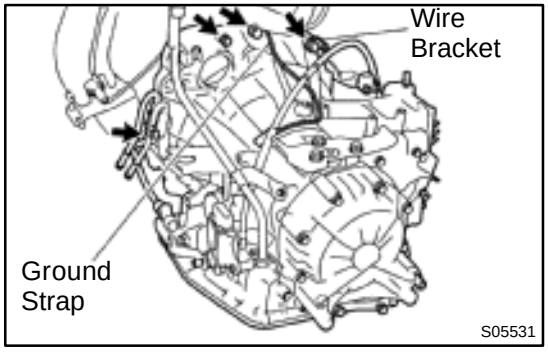

6. INSTALL TRANSAXLE TO ENGINE

(a) Attach the transaxle to the engine.
(b) Install the ground strap, wire bracket and 4 bolts.
Torque:
46 N·m (470 kgf·cm, 34 ft·lbf) for 14 mm head
64 N·m (650 kgf·cm, 47 ft·lbf) for 17 mm head

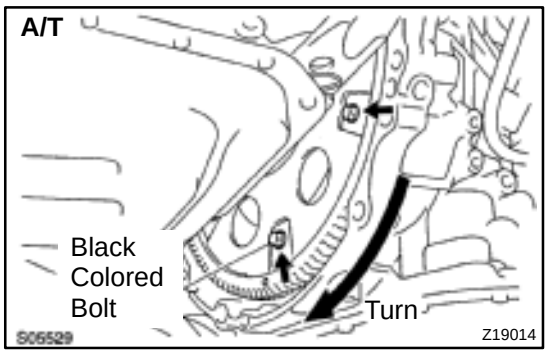

7. A/T:
INSTALL TORQUE CONVERTER CLUTCH BOLTS

(a) Apply adhesive to 2 or 3 threads of the bolt end.
Adhesive:
Part No. 08833–00070, THREE BOND 1324 or equivalent

(b) Hold the crankshaft pulley bolt with a wrench, and install the 6 bolts evenly.
Torque: 27 N·m (280 kgf·cm, 20 ft·lbf)

HINT:
First tighten the black colored bolt, install the other bolts.

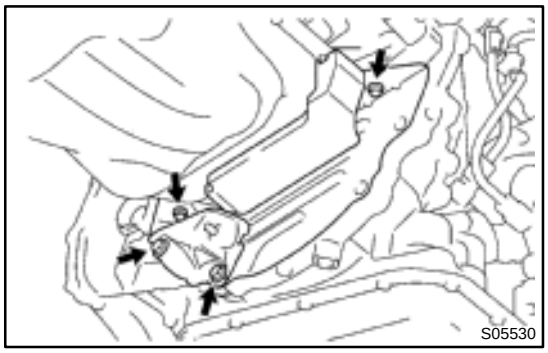

8. INSTALL NO.2 REAR END PLATE, OIL PAN INSULATOR AND EXHAUST PIPE BRACKET

(a) Install the oil pan insulator to the rear end plate.

(b) Install the rear end plate and exhaust pipe bracket with the 4 bolts.
Torque:
9.3 N·m (95 kgf·cm, 82 in.·lbf) for 10 mm head
19 N·m (195 kgf·cm, 14 ft·lbf) for 12 mm head



9. INSTALL RH STIFFENER PLATE

Install the stiffener plate with the 4 bolts.
Torque: 39 N·m (398 kgf·cm, 29 ft·lbf)

10. INSTALL INTAKE MANIFOLD STAY

Install the manifold stay with the 2 bolts.
Torque: 39 N·m (398 kgf·cm, 29 ft·lbf)

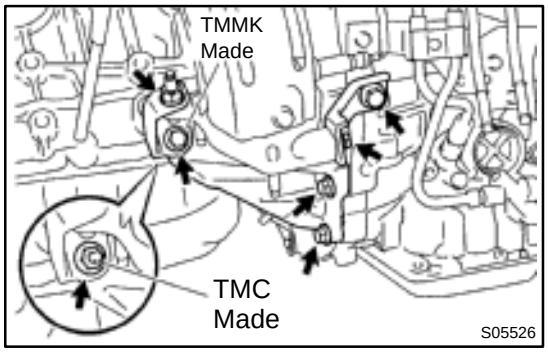

11. INSTALL LH STIFFENER PLATE AND NO.2 EXHAUST MANIFOLD STAY

(a) TMC Made:
Temporarily install the stiffener plate and manifold stay with the 2 bolts and 2 nuts.

(b) TMMK Made:
Temporarily install the stiffener plate and manifold stay with the 3 bolts and nut.

(c) Tighten the 2 bolts holding the stiffener plate to the transaxle.

Torque:
37 N·m (380 kgf·cm, 27 ft·lbf) for M/T
42 N·m (430 kgf·cm, 31 ft·lbf) for A/T

(d) TMC Made:
Tighten the nut holding the manifold stay to the cylinder block.
Torque: 58 N·m (591 kgf·cm, 43 ft·lbf)

(e) TMMK Made:
Tighten the bolt holding the manifold stay to the cylinder block.
Torque: 42 N·m (425 kgf·cm, 31 ft·lbf)

(f) Tighten the nut holding the manifold stay to the exhaust manifold.
Torque: 42 N·m (425 kgf·cm, 31 ft·lbf)

12. INSTALL NO.1 EXHAUST MANIFOLD STAY

Install the manifold stay with the 2 bolts.
Torque: 42 N·m (425 kgf·cm, 31 ft·lbf)

13. CONNECT CONNECTORS

(a) Connect the VSS connector.

(b) M/T:
Connect the back–up light switch connector.

(c) A/T:
Connect the PNP switch connector.

(d) A/T:
Connect the 2 solenoid connectors.

14. A/T:
INSTALL STARTER (See page ST–19)

15. A/T:
INSTALL THROTTLE CABLE TO THROTTLE BODY

16. INSTALL NO.2 RH ENGINE MOUNTING BRACKET TO ENGINE

Install the mounting insulator with the 3 bolts.
Torque: 52 N·m (530 kgf·cm, 38 ft·lbf)

17. INSTALL REAR ENGINE MOUNTING INSULATOR TO ENGINE

Install the mounting insulator with the 4 bolts.
Torque: 64 N·m (650 kgf·cm, 47 ft·lbf)

18. INSTALL FRONT ENGINE MOUNTING INSULATOR TO ENGINE

Install the mounting insulator with the 4 bolts.
Torque: 64 N·m (650 kgf·cm, 47 ft·lbf)

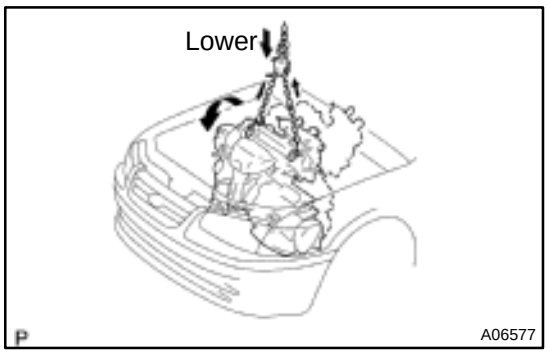

19. INSTALL ENGINE AND TRANSAXLE ASSEMBLY IN VEHICLE

(a) Attach the engine sling device to the engine hangers.

(b) Lower the engine into the engine compartment.
Tilt the transaxle downward, and lower the engine.

(c) Keep the engine level, and attach front and rear mountings to the front frame.

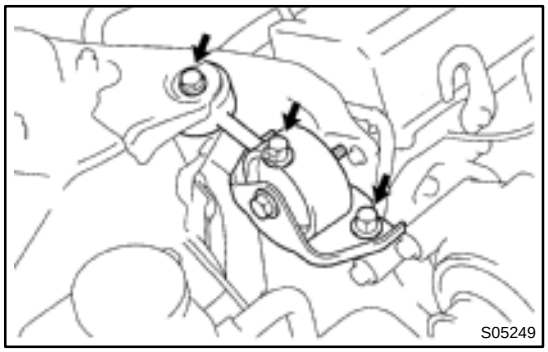

20. INSTALL ENGINE MOVING CONTROL ROD

Install the control rod with the 3 bolts.

Torque: 64 N·m (650 kgf·cm, 47 ft·lbf)

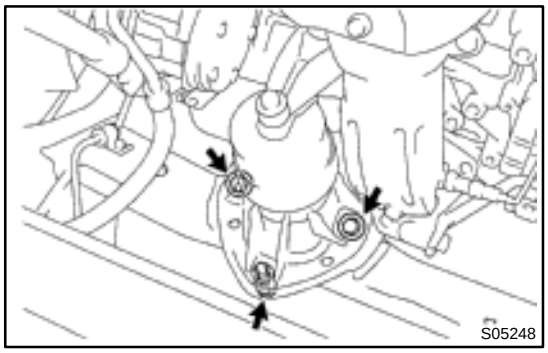

21. INSTALL BOLTS HOLDING FRONT ENGINE MOUNTING INSULATOR TO FRONT FRAME

Install the 3 bolts.

Torque:
TMC made
80 N·m (820 kgf·cm, 59 ft·lbf)
TMMK made
44 N·m (450 kgf·cm, 32 ft·lbf) for silver color
66 N·m (670 kgf·cm, 49 ft·lbf) for green color

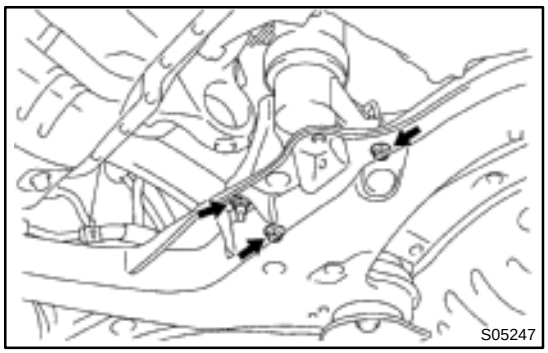

22. INSTALL NUTS HOLDING REAR ENGINE MOUNTING INSULATOR TO FRONT FRAME

(a) Install the 3 nuts.
Torque: 66 N·m (670 kgf·cm, 49 ft·lbf)

(b) Install the 2 hole plugs.

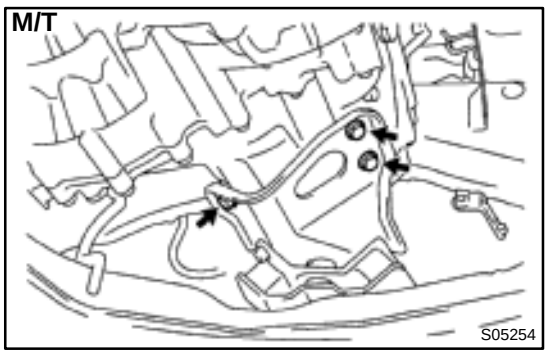

23. INSTALL BOLTS HOLDING LH ENGINE MOUNTING INSULATOR TO FRONT FRAME

M/T:

Install the 3 bolts.

Torque: 64 N·m (650 kgf·cm, 47 ft·lbf)

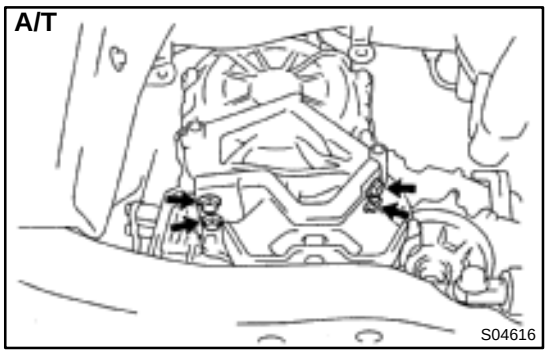

A/T:

Install the 4 bolts.

Torque: 64 N·m (650 kgf·cm, 47 ft·lbf)

24. REMOVE ENGINE SLING DEVICE

25. CONNECT TRANSAXLE CONTROL CABLE(S) TO TRANSAXLE

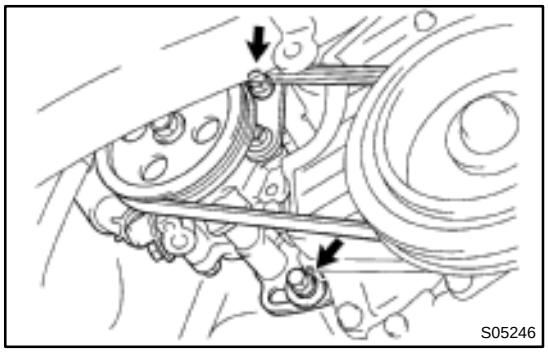

26. INSTALL PS PUMP

(a) Install the PS pump with the 2 bolts.

Torque: 43 N·m (440 kgf·cm, 32 ft·lbf)

(b) Install the drive belt.

(c) Connect the PS oil pressure switch connector.

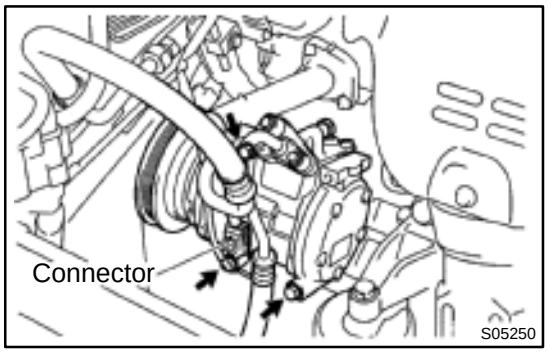

27. INSTALL A/C COMPRESSOR

(a) Install the cylinder block insulator and A/C compressor with the 3 bolts.

Torque: 25.5 N·m (260 kgf·cm, 19 ft·lbf)

(b) Install the drive belt.

(c) Connect the A/C compressor connector.

28. M/T:

INSTALL CLUTCH RELEASE CYLINDER AND TUBE TO TRANSAXLE

29. M/T:

INSTALL STARTER (See page ST–19)

30. INSTALL DRIVE SHAFTS (See page SA–24)

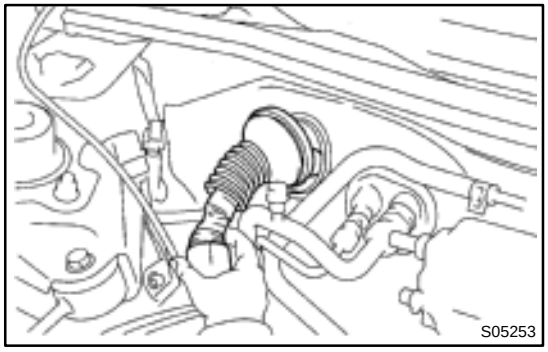

31. CONNECT ENGINE WIRE TO CABIN

(a) Push in the engine wire through the cowl panel. Install the grommet.

(b) Connect the 3 engine ECM connectors.

(c) Connect the 3 cowl wire connectors to the connectors on the bracket.

(d) Install the under cover.

32. CONNECT CONNECTORS, WIRES, CABLES, CLAMPS AND HOSES

(a) Connect the generator wire.

(b) Connect the generator connector.
(c) Install the wire clamp to the generator.
(d) Connect the starter cable.
(e) Connect the starter connector.
(f) Install the DLC1 to the bracket.
(g) Install the engine wire clamp to the bracket on the RH fender apron.
(h) Connect the MAP sensor connector.
(i) Install the wire clamp to the bracket for the MAP sensor.
(j) Connect the VSV connector for the vapor pressure sensor.
(k) Connect the 2 ground strap connectors to the RH fender apron.
(l) Connect the 2 ground strap connectors to the LH fender apron.
(m) Install the engine wire protector clamp to the battery bracket.
(n) Install the engine wire to the clamp on the fuel filter.
(o) Connect the ground cable to the transaxle.
(p) Connect the brake booster vacuum hose to the intake manifold.
(q) Connect the heater hose to the water outlet.
(r) Connect the heater hose to the water bypass pipe.
(s) Connect the fuel inlet hose to the fuel filter with 2 new gaskets and the union bolt.
Torque: 29 N·m (300 kgf·cm, 21 ft·lbf)
(t) Connect the MAP sensor vacuum hose to the gas filter on the intake manifold.

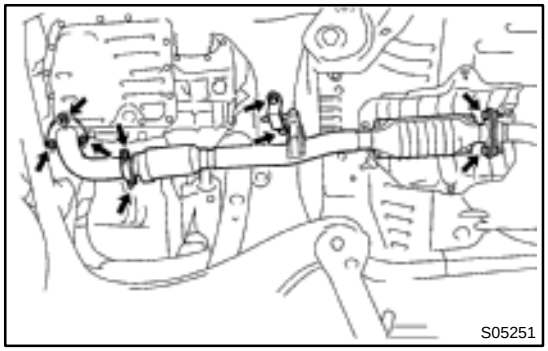
S05251

33. INSTALL FRONT EXHAUST PIPE
(a) Install the support bracket with the nut.
Torque: 33 N·m (330 kgf·cm, 24 ft·lbf)
(b) Temporarily install 2 new gaskets and the front exhaust pipe with the 2 bolts and 5 nuts.
(c) Tighten the 3 nuts holding the exhaust manifold to the front exhaust pipe.
Torque: 62 N·m (630 kgf·cm, 46 ft·lbf)
(d) Tighten the 2 bolts and 2 nuts holding the front exhaust pipe to the center exhaust pipe.
Torque: 56 N·m (570 kgf·cm, 41 ft·lbf)
(e) Install the bracket with the 2 bolts.
Torque: 33 N·m (330 kgf·cm, 24 ft·lbf)
(f) Install the support stay with the 2 bolts.
Torque: 33 N·m (330 kgf·cm, 24 ft·lbf)

34. INSTALL RADIATOR (See page CO–23)
35. INSTALL CRUISE CONTROL ACTUATOR
36. INSTALL BATTERY TRAY AND BATTERY
37. INSTALL AIR CLEANER CASE
Install the air cleaner case with the 3 bolts.

38. INSTALL AIR CLEANER CAP

(a) Connect the air cleaner hose to the throttle body.
(b) Attach the air cleaner cap to the air cleaner case, and install the 2 clamps.
(c) Tighten the air cleaner hose clamp.
(d) Connect the PCV hose to the cylinder head cover.
(e) Connect the EVAP hose to the throttle body.
(f) Connect the EVAP hose to the VSV.
(g) Connect the IAT sensor connector.
(h) Connect the VSV connector for the EVAP.

39. CONNECT ACCELERATOR CABLE

40. INSTALL ENGINE FENDER APRON SEALS

41. INSTALL HOOD

42. FILL ENGINE WITH OIL

43. FILL WITH ENGINE COOLANT

44. START ENGINE AND CHECK FOR LEAKS

45. RECHECK ENGINE COOLANT AND OIL LEVELS

CYLINDER BLOCK

COMPONENTS

EM08H–03

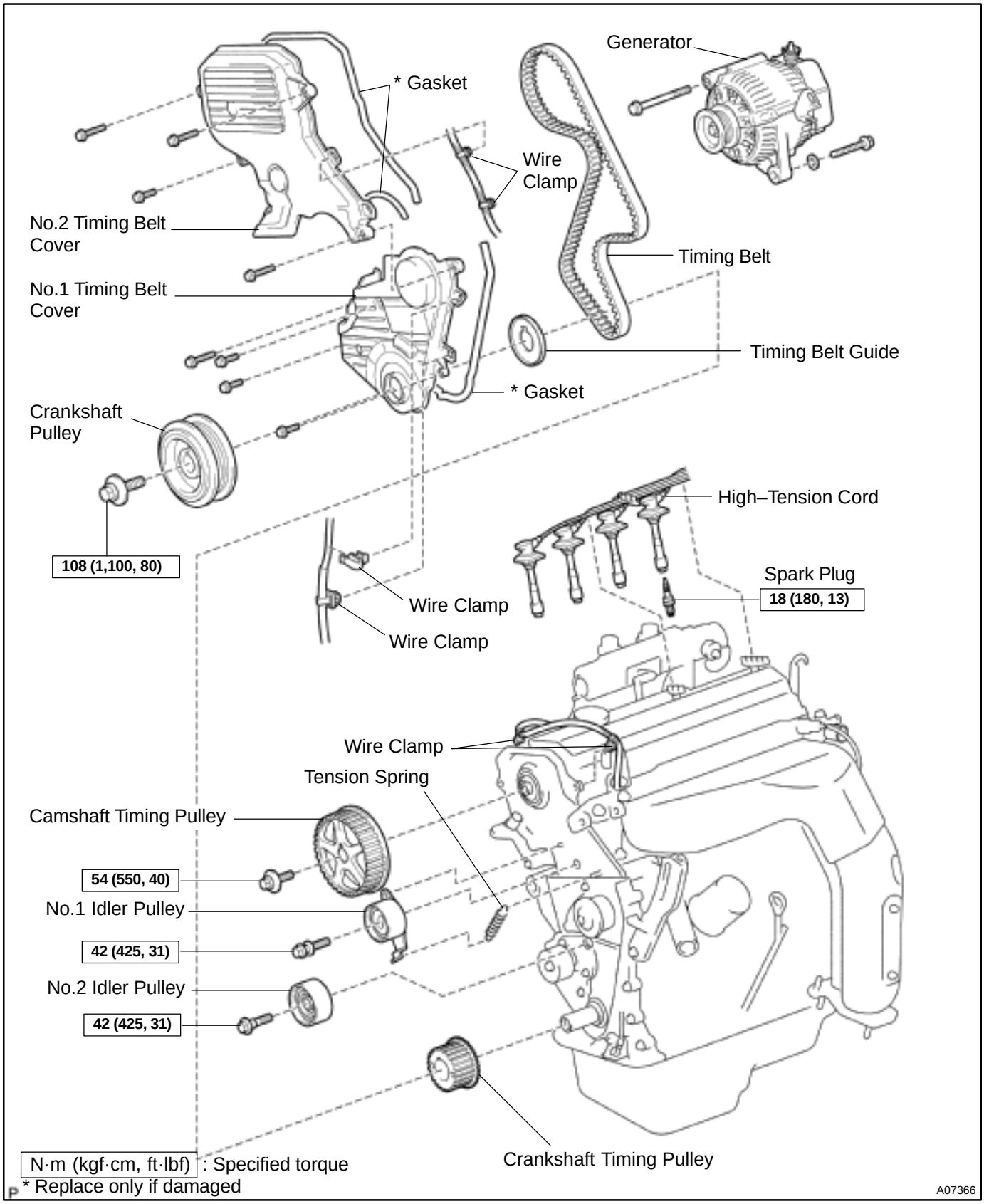

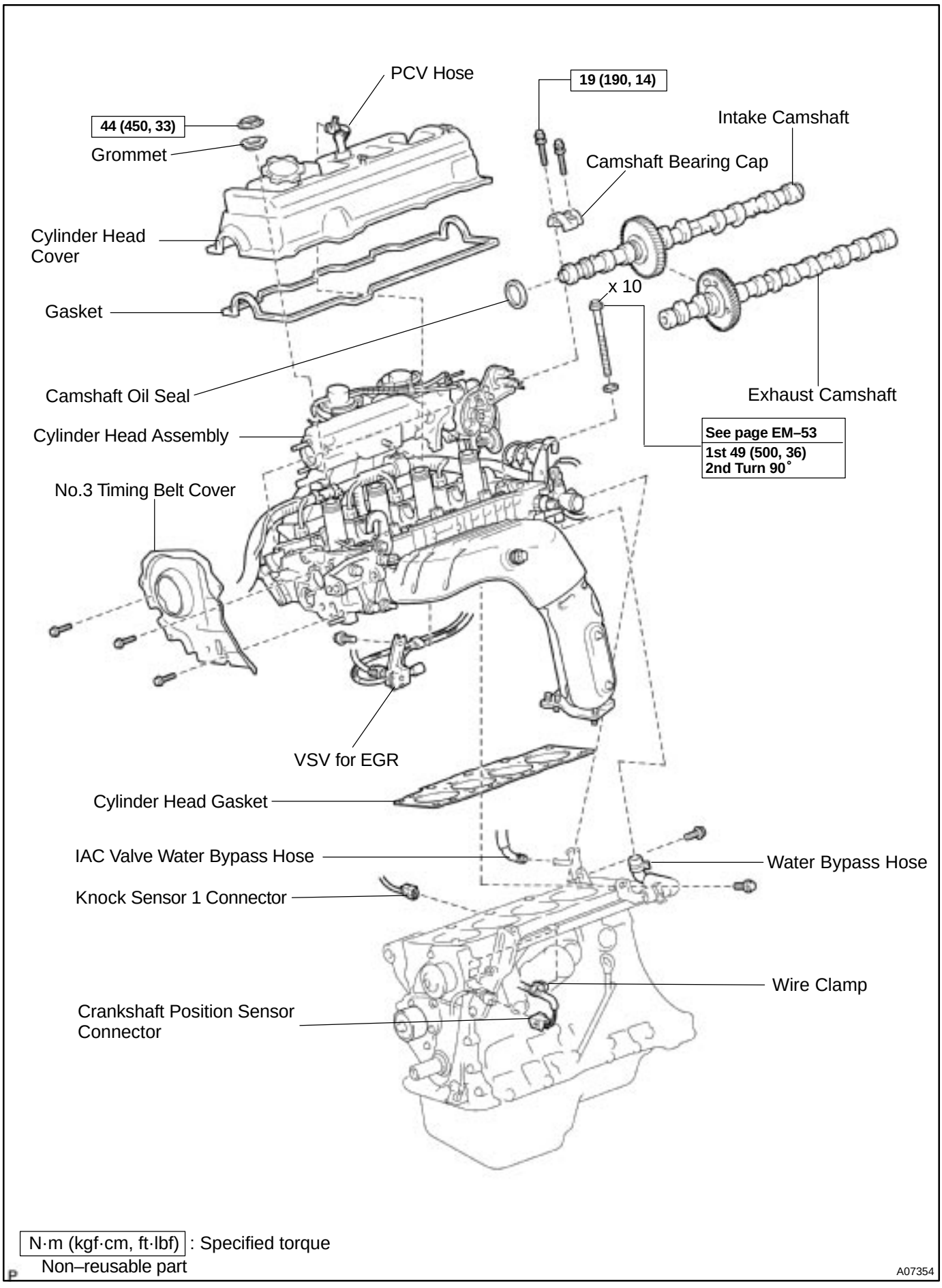
PCV Hose
19 (190, 14)
44 (450, 33)
Grommet
Intake Camshaft
Camshaft Bearing Cap
Cylinder Head Cover
x 10
Gasket
Camshaft Oil Seal
Exhaust Camshaft
Cylinder Head Assembly
See page EM–53
1st 49 (500, 36)
2nd Turn 90°
No.3 Timing Belt Cover
VSV for EGR
Cylinder Head Gasket
IAC Valve Water Bypass Hose
Water Bypass Hose
Knock Sensor 1 Connector
Wire Clamp
Crankshaft Position Sensor Connector
N·m (kgf·cm, ft·lbf) : Specified torque
Non–reusable part
A07354

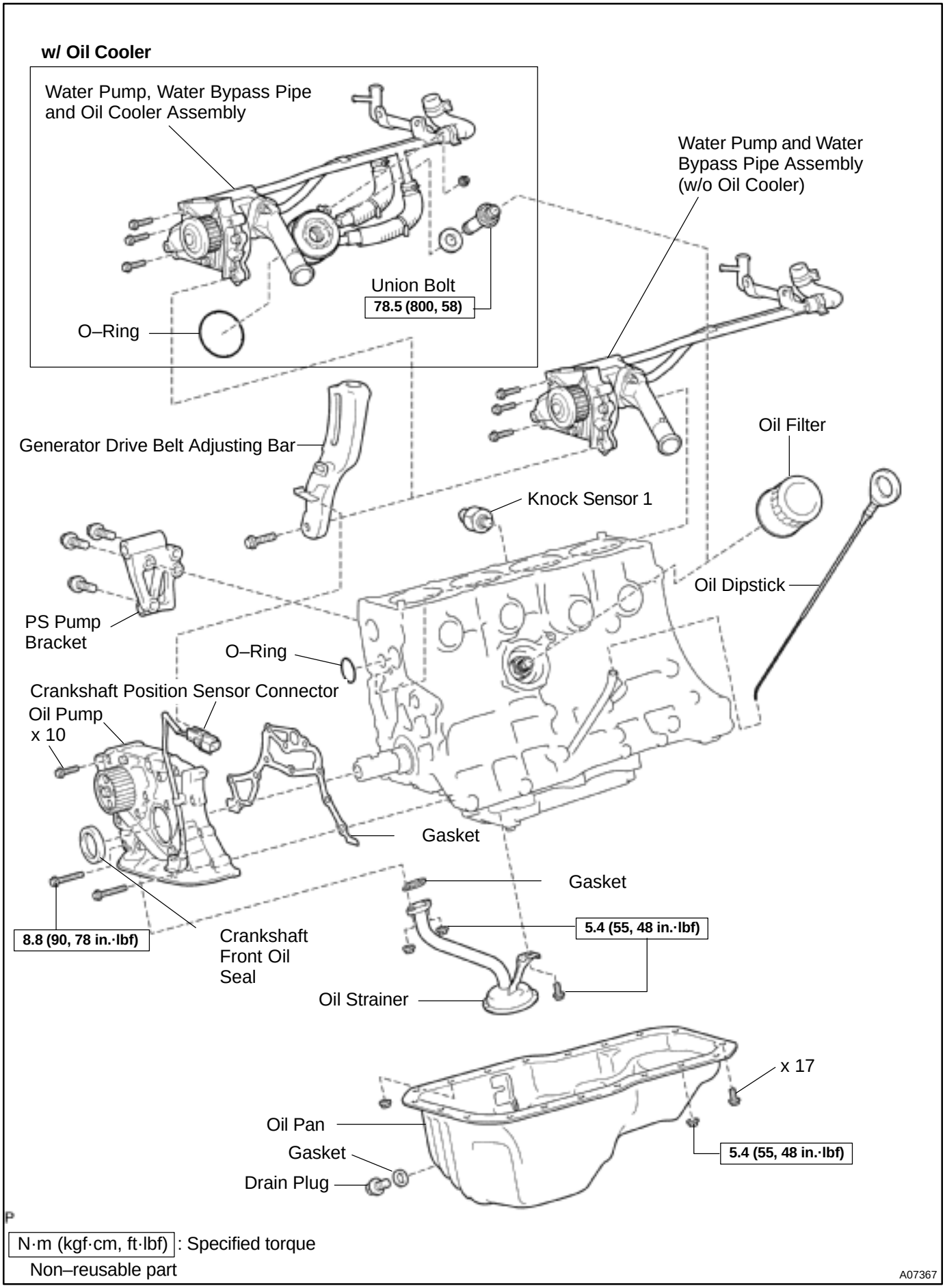
w/ Oil Cooler
Water Pump, Water Bypass Pipe and Oil Cooler Assembly
Union Bolt
78.5 (800, 58)
O–Ring
Water Pump and Water Bypass Pipe Assembly (w/o Oil Cooler)
Generator Drive Belt Adjusting Bar
Oil Filter
Knock Sensor 1
Oil Dipstick
PS Pump Bracket
O–Ring
Crankshaft Position Sensor Connector
Oil Pump
x 10
Gasket
Gasket
5.4 (55, 48 in.·lbf)
8.8 (90, 78 in.·lbf)
Crankshaft Front Oil Seal
Oil Strainer
x 17
Oil Pan
Gasket
Drain Plug
5.4 (55, 48 in.·lbf)
P
N·m (kgf·cm, ft·lbf) : Specified torque
Non–reusable part
A07367

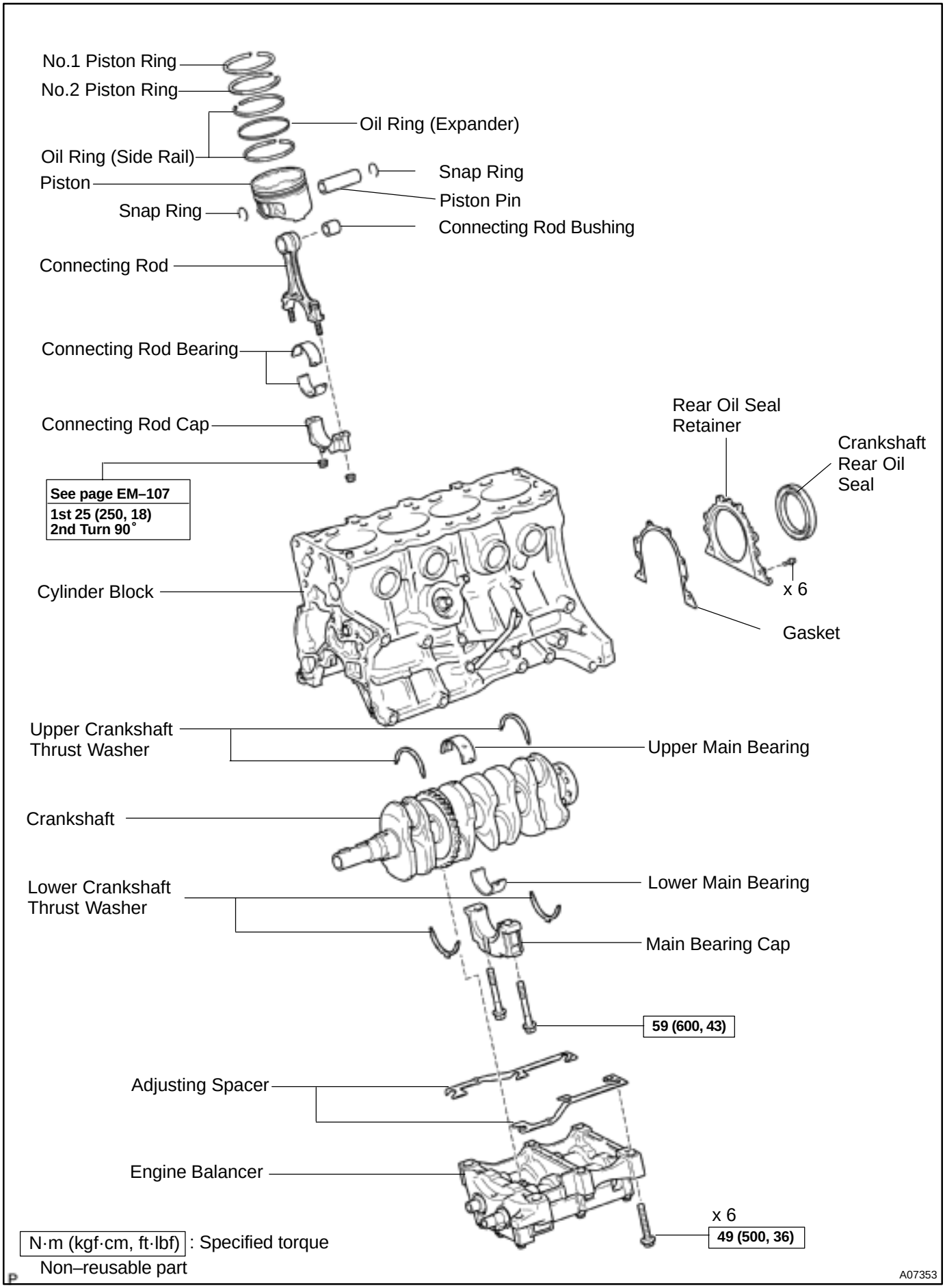
No.1 Piston Ring
No.2 Piston Ring
Oil Ring (Expander)
Oil Ring (Side Rail)
Piston
Snap Ring
Piston Pin
Snap Ring
Connecting Rod Bushing
Connecting Rod
Connecting Rod Bearing
Connecting Rod Cap
See page EM–107
1st 25 (250, 18)
2nd Turn 90°
Cylinder Block
Rear Oil Seal Retainer
Crankshaft Rear Oil Seal
x 6
Gasket
Upper Crankshaft Thrust Washer
Upper Main Bearing
Crankshaft
Lower Crankshaft Thrust Washer
Lower Main Bearing
Main Bearing Cap
59 (600, 43)
Adjusting Spacer
Engine Balancer
x 6
49 (500, 36)
N·m (kgf·cm, ft·lbf) : Specified torque
Non–reusable part
A07353

EM0YW–01

DISASSEMBLY

1. INSTALL ENGINE TO ENGINE STAND FOR DISASSEMBLY

2. REMOVE TIMING BELT AND PULLEYS
(See page EM–17)

3. REMOVE CYLINDER HEAD ASSEMBLY

(a) Remove the 3 bolts and No.3 timing belt cover.

(b) Remove the cylinder head cover.
  (1) Disconnect the PCV hose from the intake manifold.
  (2) Remove the 4 nuts, 4 grommets, head cover and gasket.

(c) Remove the camshafts. (See page EM–33)

(d) Disconnect the knock sensor 1 connector.

(e) Disconnect the crankshaft position sensor connector.

(f) Disconnect the wire clamp from the generator drive belt adjusting bar.

(g) Disconnect the IAC valve water bypass hose from the water bypass pipe.

(h) Disconnect the water bypass hose (from the water bypass pipe) from the water outlet.

(i) Remove the bolt holding the VSV for EGR to the intake manifold.

(j) Remove the 2 bolts holding the water bypass pipe to the cylinder head.

(k) Remove the cylinder head assembly.
(See page EM–33)

4. REMOVE OIL DIPSTICK

5. REMOVE OIL PAN AND OIL PUMP

(a) Disconnect the crankshaft position sensor connector from the generator drive belt adjusting bar.

(b) Remove the oil pan and oil pump. (See page LU–7)

6. REMOVE PS PUMP BRACKET

Remove the 3 bolts and pump bracket.

7. REMOVE KNOCK SENSOR 1 (See page SF–57)

8. REMOVE OIL FILTER (See page LU–2)

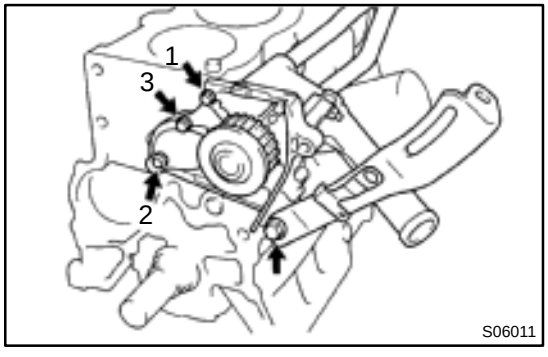

9. REMOVE WATER PUMP, WATER BYPASS PIPE AND OIL COOLER (w/ OIL COOLER) ASSEMBLY

(a) w/ Oil Cooler:
Remove the nut and union bolt, and disconnect the oil cooler. Remove the O–ring.

(b) Remove the bolt and generator drive belt adjusting bar.

(c) Remove the 3 bolts in the sequence shown, remove the water pump, water bypass pipe, oil cooler (w/ oil cooler) assembly and O–ring.

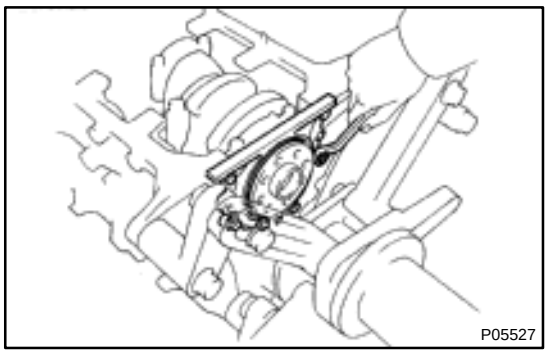

10. REMOVE REAR OIL SEAL RETAINER

Remove the 6 bolts, retainer and gasket.

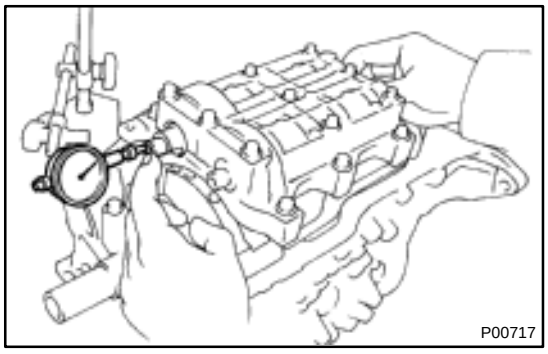

11. CHECK THRUST CLEARANCES OF NO.1 AND NO.2 BALANCE SHAFTS OF ENGINE BALANCER

Using a dial indicator, measure the thrust clearance while moving the balance shaft back and forth.

Standard thrust clearance:
0.060 – 0.110 mm (0.0024 – 0.0043 in.)
Maximum clearance: 0.11 mm (0.0043 in.)

If the clearance is greater than maximum, replace the balance shaft housings and bearings. If necessary, replace the balance shafts.

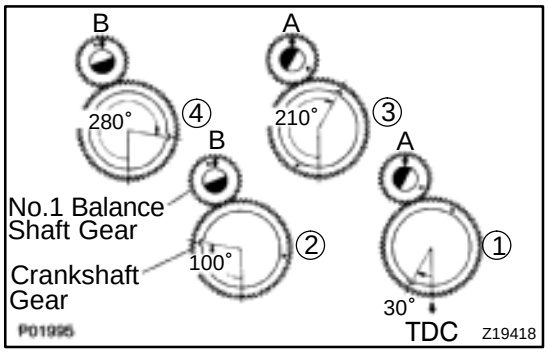

12. CHECK AND ADJUST BACKLASH OF CRANKSHAFT GEAR AND NO.1 BALANCE SHAFT GEAR

NOTICE:

Backlash between the crankshaft gear and No.1 balance shaft gear varies with the rotation of the balance shaft and the deviation of the crankshaft gear. Accordingly, it is necessary to measure the backlash at the 4 points shown in the illustration on the left.

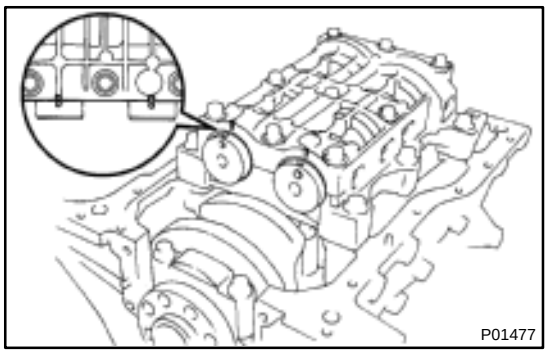

(a) Turn the crankshaft 2 or 3 times to settle the crankshaft gear and No.1 balance shaft gear.

(b) When the No.1 piston is at TDC, check that the punch marks shown in the illustration of the balance shafts are aligned with the grooves of the No.2 housing.

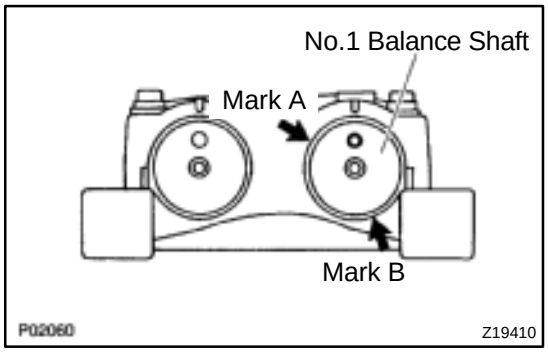

(c) Check that punch marks A and B are at the positions on the No.1 balance shaft indicated in the illustration.

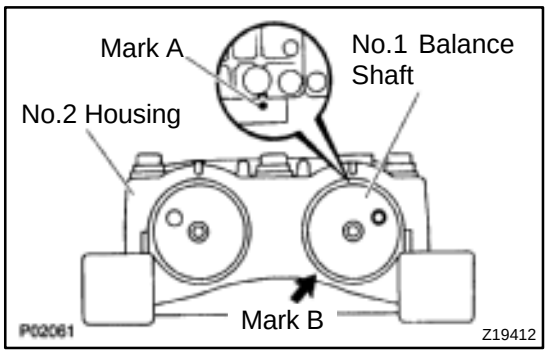

(d) First turn the crankshaft clockwise, and align the groove of the No.2 balance shaft housing with punch mark A of the No.1 balance shaft.

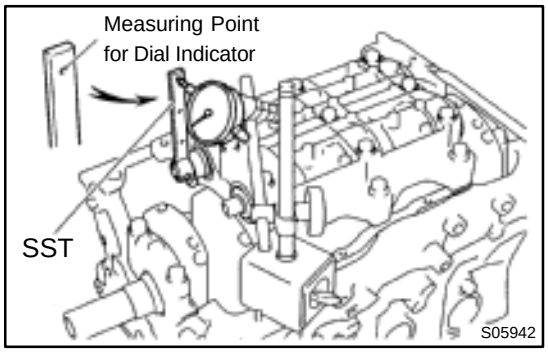

(e) Set SST and a dial indicator as shown in the illustration.
SST 09224–74010

HINT:

Make sure that the needle of the dial indicator is perpendicular to the SST and that it is placed in the middle of the 3rd indention.

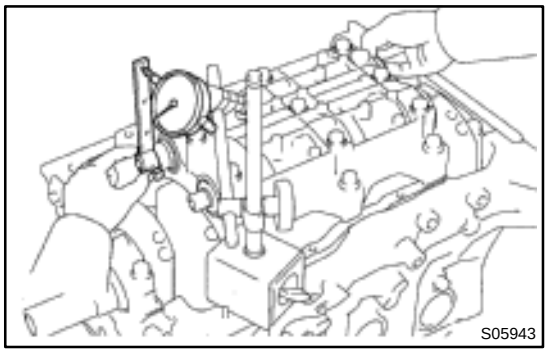

(f) Lightly turn the No.1 balance shaft by hand and measure the backlash.

HINT:

Turn the No.1 balance shaft 4 or 5 times to provide a steady backlash reading.

To prevent excessive backlash due to thrust clearance, measure the backlash while pressing on the rear of the No.1 balance shaft.

Standard backlash (at punch mark A):
0.005 – 0.040 mm (0.0002 – 0.0016 in.)

NOTICE:

Do not turn the No.1 balance shaft strongly.

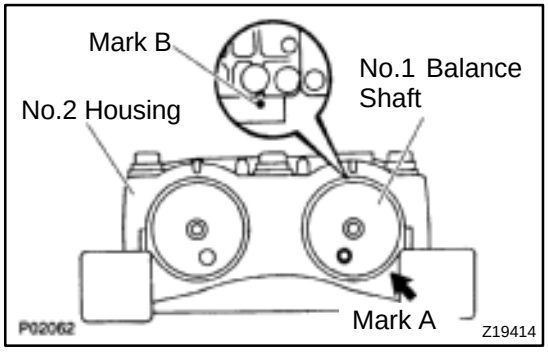

(g) Remove the dial indicator and SST.

(h) Turn the crankshaft clockwise to align the groove of the No.2 housing with punch mark B.

(i) Set the dial indicator. (See step (e))

(j) Measure the backlash. (See step (f))

Standard backlash (at punch mark B):
0.005 – 0.060 mm (0.0002 – 0.0024 in.)

(k) Remove the dial indicator.

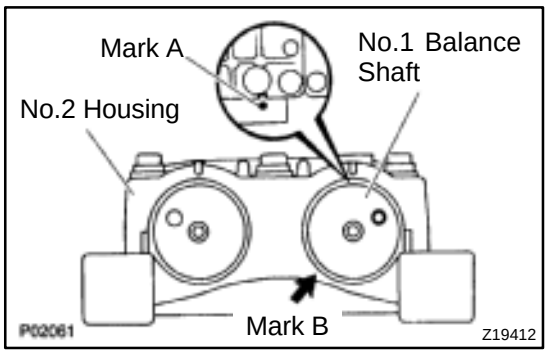

(l) Turn the crankshaft clockwise again to align the groove of the No.2 housing with punch mark A.
(m) Set the dial indicator. (See step (e))
(n) Measure the backlash. (See step (f))
Standard backlash (at punch mark A):
0.005 – 0.040 mm (0.0002 – 0.0016 in.)
(o) Remove the dial indicator.

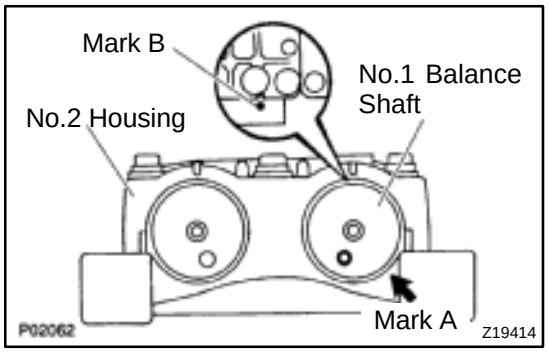

(p) Turn the crankshaft clockwise again to align the groove of the No.2 housing with punch mark B.
(q) Set the dial indicator. (See step (e))
(r) Measure the backlash. (See step (f))
Standard backlash (at punch mark B):
0.005 – 0.060 mm (0.0002 – 0.0024 in.)
(s) Remove the dial indicator.

If even one of the 4 points measured above exceeds the backlash specification, adjust the backlash with new spacers.

NOTICE:

Use the same size spacers for both the left and right sides.

HINT:

Varying the spacer thickness by 0.02 mm (0.0008 in.) change the backlash by about 0.014 mm (0.0006 in.).

If the backlash is greater than permitted maximum, select a thinner shim.

If the backlash is less than the specification, select a thicker shim.

Adjusting Spacer Selection Chart (Off–Vehicle)

Measured backlash mm (in.) \ Installed spacer No.	01	02	03	04	05	06	07	08	09	10	11	12	13	14	15	16	17	18	19	20	21	22	23	24	25	26	27	28	29	30	31	32	33	34	35	36	37	38	39	40
0.000–0.004 (0.0000–0.0002)	03	03	05	05	07	07	09	09	11	11	13	13	15	15	17	17	19	19	21	21	23	23	25	25	27	27	29	29	31	31	33	33	35	35	37	37	39	39		
0.005–0.040 (0.0002–0.0016)																																								
0.041–0.046 (0.0016–0.0018)		01	01	01	01	01	03	03	05	05	07	07	09	09	11	11	13	13	15	15	17	17	19	19	21	21	23	23	25	25	27	27	29	29	31	31	33	33	35	35
0.047–0.053 (0.0019–0.0021)		01	01	01	01	01	03	03	05	05	07	07	09	09	11	11	13	13	15	15	17	17	19	19	21	21	23	23	25	25	27	27	29	29	31	31	33	33	35	35
0.054–0.060 (0.0021–0.0024)			01	01	01	01	01	03	03	05	05	07	07	09	09	11	11	13	13	15	15	17	17	19	19	21	21	23	23	25	25	27	27	29	29	31	31	33	33	35
0.061–0.067 (0.0024–0.0026)				01	01	01	01	01	03	03	05	05	07	07	09	09	11	11	13	13	15	15	17	17	19	19	21	21	23	23	25	25	27	27	29	29	31	31	33	33
0.068–0.074 (0.0027–0.0029)					01	01	01	01	01	03	03	05	05	07	07	09	09	11	11	13	13	15	15	17	17	19	19	21	21	23	23	25	25	27	27	29	29	31	31	33	
0.075–0.081 (0.0030–0.0032)						01	01	01	01	01	03	03	05	05	07	07	09	09	11	11	13	13	15	15	17	17	19	19	21	21	23	23	25	25	27	27	29	29	31	31		
0.082–0.088 (0.0032–0.0035)							01	01	01	01	01	03	03	05	05	07	07	09	09	11	11	13	13	15	15	17	17	19	19	21	21	23	23	25	25	27	27	29	29	31
0.089–0.095 (0.0035–0.0037)								01	01	01	01	01	03	03	05	05	07	07	09	09	11	11	13	13	15	15	17	17	19	19	21	21	23	23	25	25	27	27	29	29
0.096–0.102 (0.0038–0.0040)									01	01	01	01	01	03	03	05	05	07	07	09	09	11	11	13	13	15	15	17	17	19	19	21	21	23	23	25	25	27	27	29
0.103–0.109 (0.0041–0.0043)										01	01	01	01	01	03	03	05	05	07	07	09	09	11	11	13	13	15	15	17	17	19	19	21	21	23	23	25	25	27	27
0.110–0.116 (0.0043–0.0046)											01	01	01	01	01	03	03	05	05	07	07	09	09	11	11	13	13	15	15	17	17	19	19	21	21	23	23	25	25	27
0.117–0.123 (0.0046–0.0048)												01	01	01	01	01	03	03	05	05	07	07	09	09	11	11	13	13	15	15	17	17	19	19	21	21	23	23	25	25
0.124–0.130 (0.0049–0.0051)													01	01	01	01	01	03	03	05	05	07	07	09	09	11	11	13	13	15	15	17	17	19	19	21	21	23	23	25
0.131–0.137 (0.0052–0.0054)														01	01	01	01	01	03	03	05	05	07	07	09	09	11	11	13	13	15	15	17	17	19	19	21	21	23	23
0.138–0.144 (0.0054–0.0057)															01	01	01	01	01	03	03	05	05	07	07	09	09	11	11	13	13	15	15	17	17	19	19	21	21	23
0.145–0.151 (0.0057–0.0059)																01	01	01	01	01	03	03	05	05	07	07	09	09	11	11	13	13	15	15	17	17	19	19	21	21
0.152–0.158 (0.0060–0.0062)																	01	01	01	01	01	03	03	05	05	07	07	09	09	11	11	13	13	15	15	17	17	19	19	21
0.159–0.165 (0.0063–0.0065)																		01	01	01	01	01	03	03	05	05	07	07	09	09	11	11	13	13	15	15	17	17	19	19
0.166–0.172 (0.0065–0.0068)																			01	01	01	01	01	03	03	05	05	07	07	09	09	11	11	13	13	15	15	17	17	19
0.173–0.179 (0.0068–0.0070)																				01	01	01	01	01	03	03	05	05	07	07	09	09	11	11	13	13	15	15	17	17
0.180–0.186 (0.0071–0.0073)																					01	01	01	01	01	03	03	05	05	07	07	09	09	11	11	13	13	15	15	17
0.187–0.193 (0.0074–0.0076)																						01	01	01	01	01	03	03	05	05	07	07	09	09	11	11	13	13	15	15
0.194–0.200 (0.0076–0.0079)																							01	01	01	01	01	03	03	05	05	07	07	09	09	11	11	13	13	15
0.201–0.207 (0.0080–0.0081)																								01	01	01	01	01	03	03	05	05	07	07	09	09	11	11	13	13
0.208–0.214 (0.0082–0.0084)																									01	01	01	01	01	03	03	05	05	07	07	09	09	11	11	13	
0.215–0.221 (0.0085–0.0087)																										01	01	01	01	01	03	03	05	05	07	07	09	09	11	11	
0.222–0.228 (0.0087–0.0090)																											01	01	01	01	01	03	03	05	05	07	07	09	09	11	
0.229–0.235 (0.0090–0.0093)																												01	01	01	01	03	03	05	05	07	07	09	09	
0.236–0.242 (0.0093–0.0095)																													01	01	01	01	03	03	05	05	07	07	09	
0.243–0.249 (0.0096–0.0098)																														01	01	01	01	01	03	03	05	05	07	07
0.250–0.256 (0.0098–0.0101)																															01	01	01	01	01	03	03	05	05	07
0.257–0.263 (0.0101–0.0104)																																01	01	01	01	01	03	03	05	05
0.264–0.270 (0.0104–0.0106)																																	01	01	01	01	01	03	03	05
0.271–0.277 (0.0107–0.0109)																																		01	01	01	01	01	03	03
0.278–0.284 (0.0109–0.0112)																																			01	01	01	01	01	03
0.285–0.291 (0.0112–0.0115)																																				01	01	01	01	01
0.292–0.298 (0.0115–0.0117)																																					01	01	01	01
0.299–0.305 (0.0118–0.0120)																																						01	01	01
0.306–0.313 (0.0120–0.0123)																																							01	01

Standard backlash (at punch mark A):
0.005 – 0.40 mm (0.0002 – 0.0016 in.)

EXAMPLE: The No.26 spacers are installed, and the measured backlash is 0.120 mm (0.0047 in.). Replace the No. 26 spacers with new No.11 spacers.

New spacer thickness mm (in.)

No.	Thickness	No.	Thickness	No.	Thickness	No.	Thickness
01	1.74 (0.0685)	11	1.84 (0.0724)	21	1.94 (0.0764)	31	2.04 (0.0803)
03	1.76 (0.0693)	13	1.86 (0.0732)	23	1.96 (0.0772)	33	2.06 (0.0811)
05	1.78 (0.0701)	15	1.88 (0.0740)	25	1.98 (0.0780)	35	2.08 (0.0819)
07	1.80 (0.0709)	17	1.90 (0.0748)	27	2.00 (0.0787)	37	2.10 (0.0827)
09	1.82 (0.0717)	19	1.92 (0.0756)	29	2.02 (0.0975)	39	2.12 (0.0835)

A01917

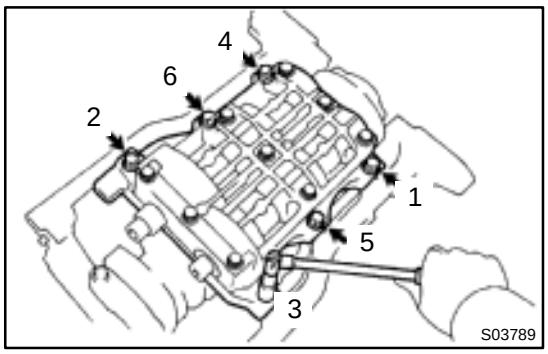

13. REMOVE ENGINE BALANCER

(a) Uniformly loosen and remove the 6 bolts in several passes, in the sequence shown.

(b) Remove the engine balancer and spacers.

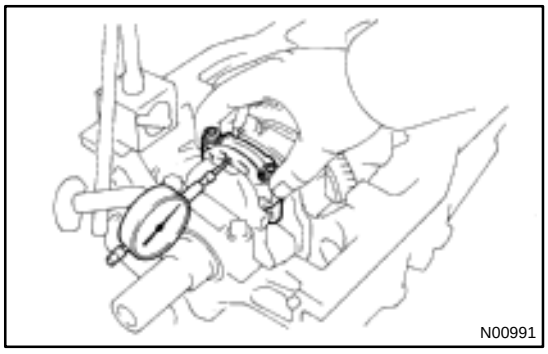

14. CHECK CONNECTING ROD THRUST CLEARANCE

Using a dial indicator, measure the thrust clearance while moving the connecting rod back and forth.

Standard thrust clearance:
0.160 – 0.312 mm (0.0063 – 0.0123 in.)
Maximum thrust clearance: 0.35 mm (0.0138 in.)

If the thrust clearance is greater than maximum, replace the connecting rod assembly. If necessary, replace the crankshaft.

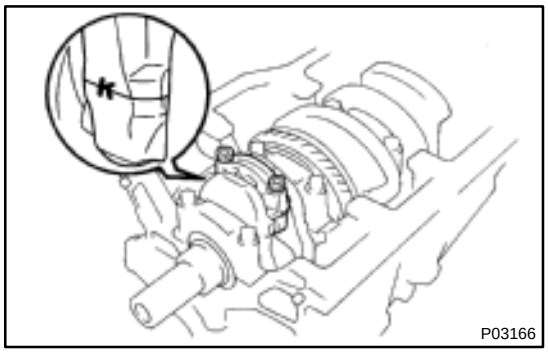

15. REMOVE CONNECTING ROD CAPS AND CHECK OIL CLEARANCE

(a) Check the matchmarks on the connecting rod and cap to ensure correct reassembly.

(b) Remove the 2 connecting rod cap nuts.

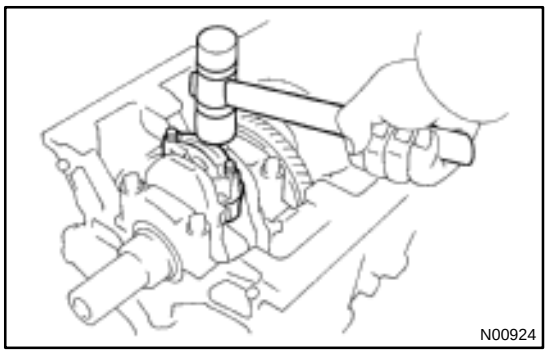

(c) Using a plastic–faced hammer, lightly tap the connecting rod bolts and lift off the connecting rod cap.

HINT:
Keep the lower bearing inserted with the connecting rod cap.

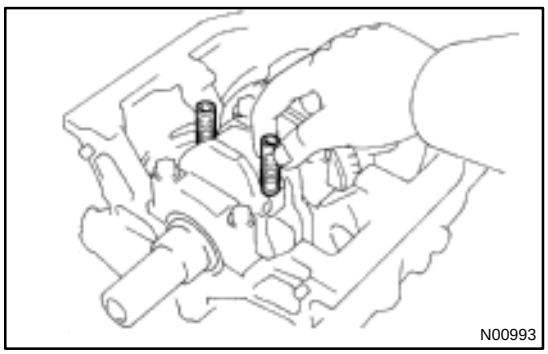

(d) Cover the connecting rod bolts with a short piece of hose to protect the crankshaft from damage.

(e) Clean the crank pin and bearing.

(f) Check the crank pin and bearing for pitting and scratches.

If the crank pin or bearing is damaged, replace the bearings. If necessary, grind or replace the crankshaft.

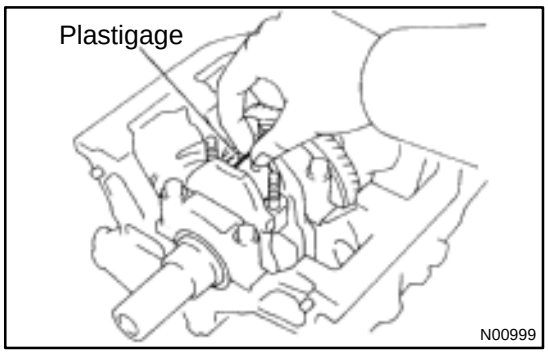

(g) Lay a strip of Plastigage across the crank pin.

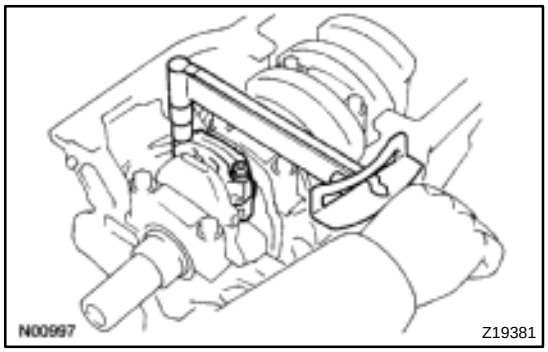

(h) Install the connecting rod cap.(See page EM–107)

NOTICE:

Do not turn the crankshaft.

(i) Remove the connecting rod cap.
(See steps (b) and (c))

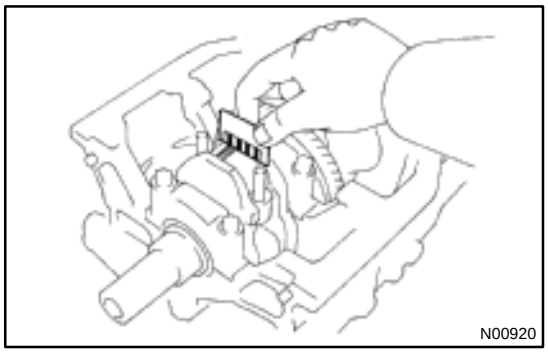

(j) Measure the Plastigage at its widest point.

Standard oil clearance:

STD	0.024 – 0.055 mm (0.0009 – 0.0022 in.)
U/S 0.25	0.023 – 0.069 mm (0.0009 – 0.0027 in.)

Maximum oil clearance: 0.08 mm (0.0031 in.)

If the oil clearance is greater than maximum, replace the bearings. If necessary, grind or replace the crankshaft.

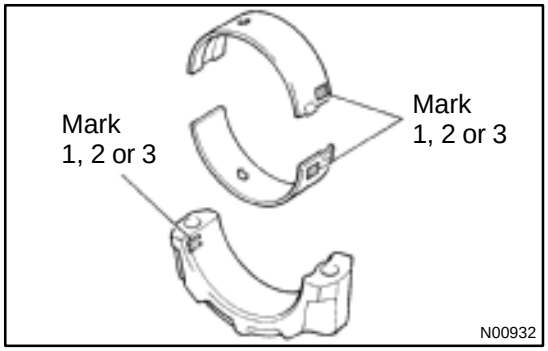

HINT:

If using a standard bearing, replace it with one having the same number marked on the connecting rod cap. There are 3 sizes of standard bearings, marked ”1”, ”2” and ”3” accordingly.

Reference

Standard sized bearing center wall thickness:

Mark ”1”	1.484 – 1.488 mm (0.0584 – 0.0586 in.)
Mark ”2”	1.488 – 1.492 mm (0.0586 – 0.0587 in.)
Mark ”3”	1.492 – 1.496 mm (0.0587 – 0.0589 in.)

(k) Completely remove the Plastigage.

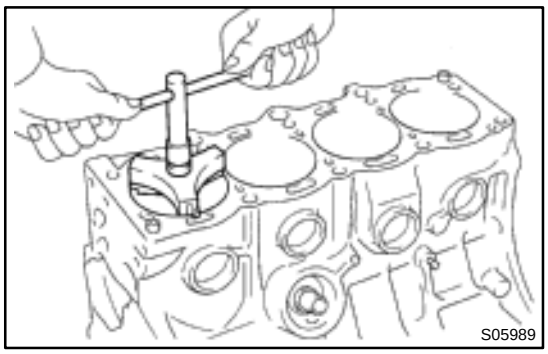

16. REMOVE PISTON AND CONNECTING ROD ASSEMBLIES

(a) Using a ridge reamer, remove all the carbon from the top of the cylinder.

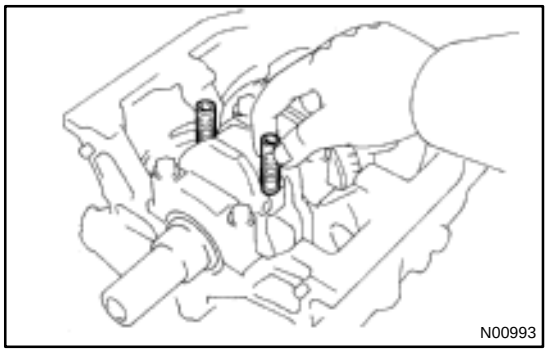

(b) Cover the connecting rod bolts with a short piece of hose to protect the crankshaft from damage.

(c) Push the piston, connecting rod assembly and upper bearing through the top of the cylinder block.

HINT:

Keep the bearings, connecting rod and cap together.
Arrange the piston and connecting rod assemblies in the correct order.

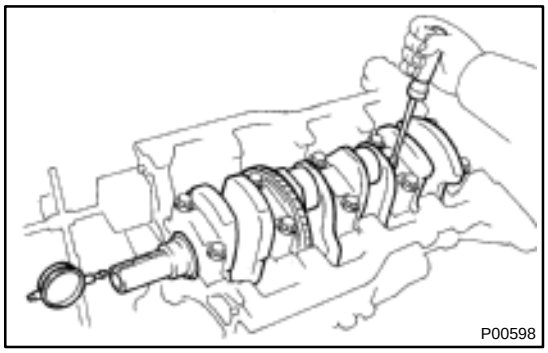

17. CHECK CRANKSHAFT THRUST CLEARANCE

Using a dial indicator, measure the thrust clearance while prying the crankshaft back and forth with a screwdriver.

Standard thrust clearance:
0.020 – 0.220 mm (0.0008 – 0.0087 in.)
Maximum thrust clearance: 0.30 mm (0.0118 in.)

If the thrust clearance is greater than maximum, replace the thrust washer as a set.

Thrust washer thickness:
2.440 – 2.490 mm (0.0961 – 0.0980 in.)

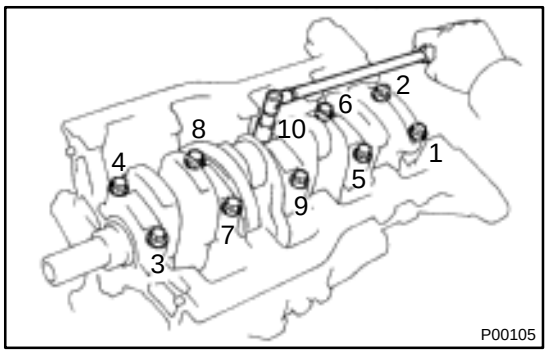

18. REMOVE MAIN BEARING CAPS AND CHECK OIL CLEARANCE

(a) Uniformly loosen and remove the 10 main bearing cap bolts in several passes, in the sequence shown.

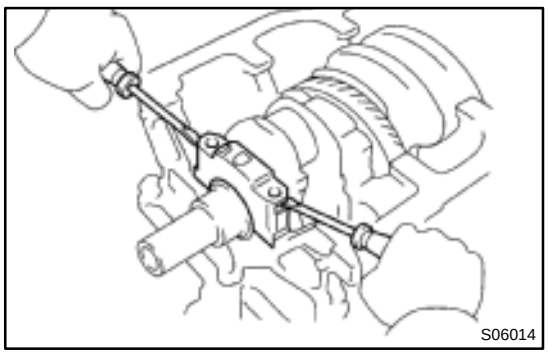

(b) Using 2 screwdrivers, pry out the main bearing cap, and remove the 5 main bearing caps, 5 lower bearings and 2 lower thrust washers (No.3 main bearing cap only).

HINT:

Keep the lower bearing and main bearing cap together.
Arrange the main bearing caps and lower thrust washers in the correct order.

(c) Lift out the crankshaft.

HINT:
Keep the upper bearing and upper thrust washers together with the cylinder block.

(d) Clean each main journal and bearing.

(e) Check each main journal and bearing for pitting and scratches.

If the journal or bearing is damaged, replace the bearings. If necessary, grind or replace the crankshaft.

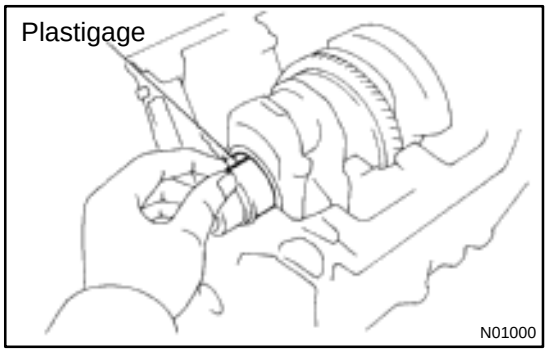

(f) Place the crankshaft on the cylinder block.

(g) Lay a strip of Plastigage across each journal.

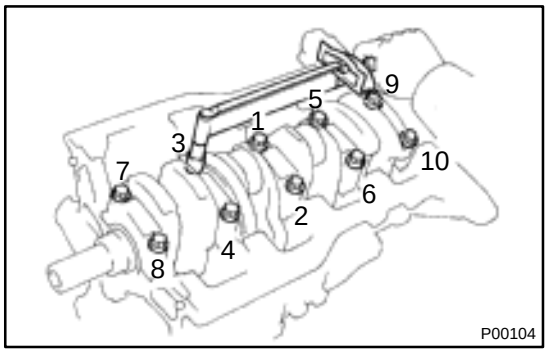

(h) Install the main bearing caps. (See page EM–107)

NOTICE:

Do not turn the crankshaft.

(i) Remove the main bearing caps.
(See steps (a) and (b))

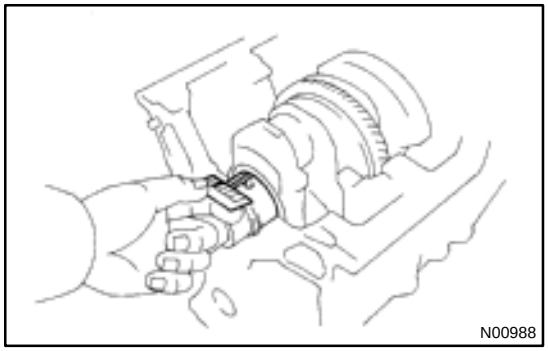

(j) Measure the Plastigage at its widest point.
Standard clearance:

No.3	STD	0.025 – 0.044 mm (0.0010 – 0.0017 in.)
	U/S 0.25	0.027 – 0.067 mm (0.0011 – 0.0026 in.)
Others	STD	0.015 – 0.034 mm (0.0006 – 0.0013 in.)
	U/S 0.25	0.019 – 0.059 mm (0.0007 – 0.0023 in.)

Maximum clearance: 0.08 mm (0.0031 in.)

HINT:
If replacing the cylinder block subassembly, the bearing standard clearance will be:

No.3	0.027 – 0.054 mm (0.0001 – 0.0021 in.)
Others	0.017 – 0.044 mm (0.0007 – 0.0017 in.)

If the oil clearance is greater than maximum, replace the bearings. If necessary, grind or replace the crankshaft.

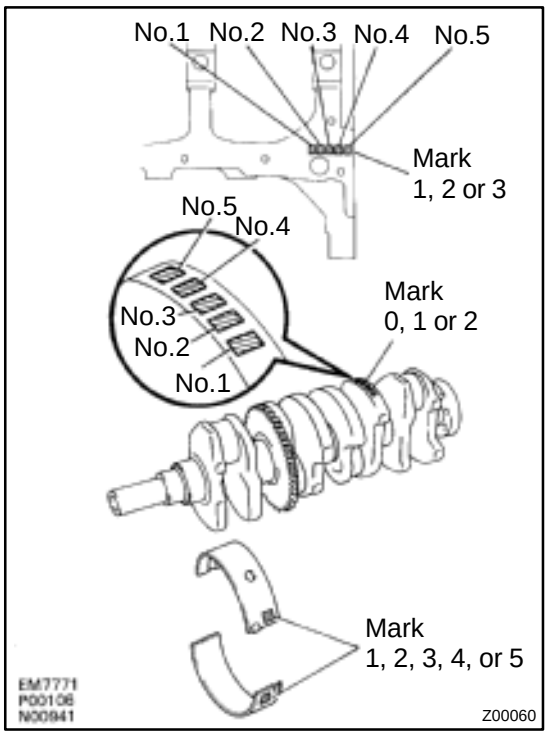

HINT:
If using a standard bearing, replace it with one having the same number. If the number of the bearing cannot be determined, select the correct bearing by adding together the numbers imprinted on the cylinder block and crankshaft, then selecting the bearing with the same number as the total. There are 5 sizes of standard bearings, marked ”1”, ”2”, ”3”, ”4” and ”5” accordingly.

	Number marked								
Cylinder block	1			2			3		
Crankshaft	0	1	2	0	1	2	0	1	2
Use bearing	1	2	3	2	3	4	3	4	5

EXAMPLE: Cylinder block ”2” + Crankshaft ”1”
= Total number 3 (Use bearing ”3”)

Reference

Cylinder block main journal bore diameter:

Mark ”1”	59.020 – 59.026 mm (2.3236 – 2.3239 in.)
Mark ”2”	59.026 – 59.032 mm (2.3239 – 2.3241 in.)
Mark ”3”	59.032 – 59.038 mm (2.3241 – 2.3243 in.)

Crankshaft main journal diameter:

Mark ”0”	54.998 – 55.003 mm (2.1653 – 2.1655 in.)
Mark ”1”	54.993 – 54.998 mm (2.1651 – 2.1653 in.)
Mark ”2”	54.988 – 54.993 mm (2.1649 – 2.1651 in.)

Standard sized bearing center wall thickness:

No.3

Mark ”1”	1.992 – 1.995 mm (0.0784 – 0.0785 in.)
Mark ”2”	1.995 – 1.998 mm (0.0785 – 0.0787 in.)
Mark ”3”	1.998 – 2.001 mm (0.0787 – 0.0788 in.)
Mark ”4”	2.001 – 2.004 mm (0.0788 – 0.0789 in.)
Mark ”5”	2.004 – 2.007 mm (0.0789 – 0.0790 in.)

Others

Mark ”1”	1.997 – 2.000 mm (0.0786 – 0.0787 in.)
Mark ”2”	2.000 – 2.003 mm (0.0787 – 0.0789 in.)
Mark ”3”	2.003 – 2.006 mm (0.0789 – 0.0790 in.)
Mark ”4”	2.006 – 2.009 mm (0.0790 – 0.0791 in.)
Mark ”5”	2.009 – 2.012 mm (0.0791 – 0.0792 in.)

(k) Complately remove the Plastigage.

19. REMOVE CRANKSHAFT

(a) Lift out the crankshaft.

(b) Remove the 5 upper bearings and 2 upper thrust washers from the cylinder block.

HINT:
Arrange the main bearing caps, bearings and thrust washers in the correct order.

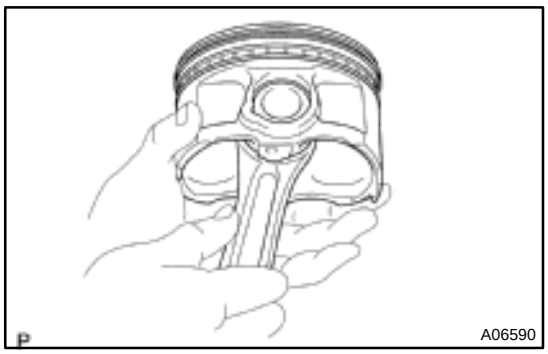

20. CHECK FIT BETWEEN PISTON AND PISTON PIN

Try to move the piston back and forth on the piston pin.

If any movement is felt, replace the piston and pin as a set.

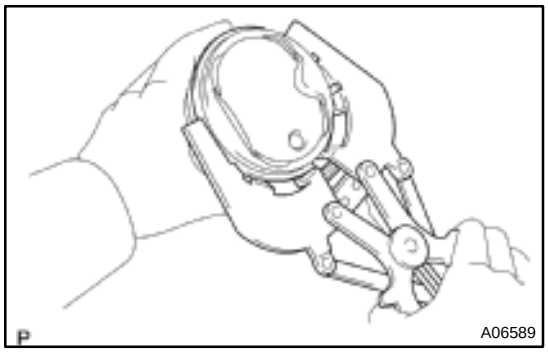

21. REMOVE PISTON RINGS

(a) Using a piston ring expander, remove the No.1 and No.2 piston rings.

(b) Remove the 2 side rails and oil ring expander by hand.

HINT:

Arrange the piston rings in correct order only.

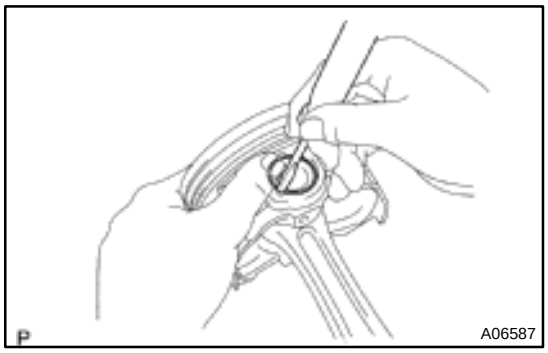

22. DISCONNECT CONNECTING ROD FROM PISTON

(a) Using a small screwdriver, pry out the 2 snap rings.

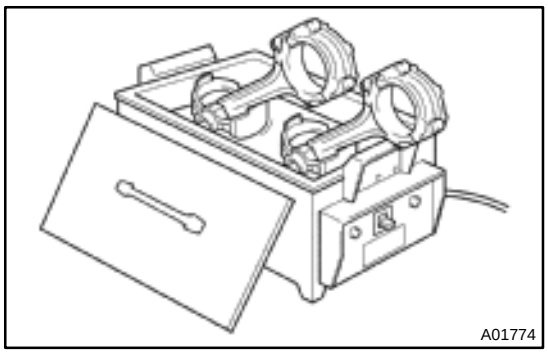

(b) Gradually heat the piston to 80 – 90˚C (176 – 194˚F).

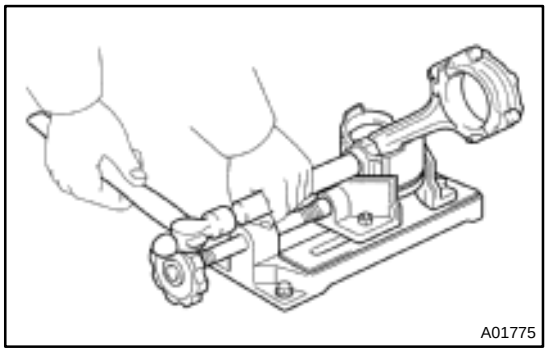

(c) Using a plastic–faced hammer and brass bar, lightly tap out the piston pin and remove the connecting rod.

HINT:

The piston and pin are a matched set.

Arrange the pistons, pins, rings, connecting rods and bearings in the correct order.

EM08J–03

INSPECTION

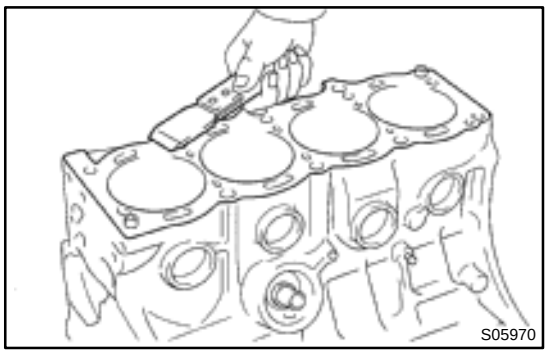

1. CLEAN CYLINDER BLOCK

(a) Remove the gasket material.
Using a gasket scraper, remove all the gasket material from the top surface of the cylinder block.

(b) Clean the cylinder block.
Using a soft brush and solvent, thoroughly clean the cylinder block.

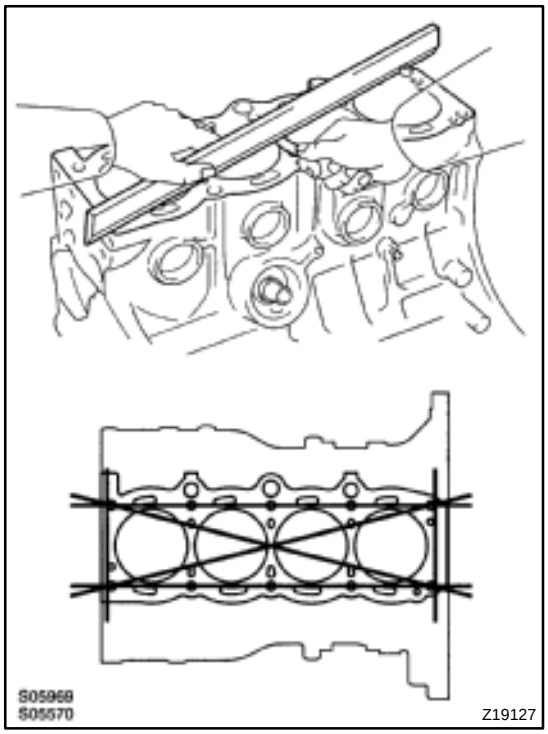

2. INSPECT CYLINDER BLOCK

(a) Inspect for flatness.
Using a precision straight edge and feeler gauge, measure the surfaces contacting the cylinder head gasket for warpage.
Maximum warpage: 0.05 mm (0.0020 in.)

If warpage is greater than maximum, replace the cylinder block.

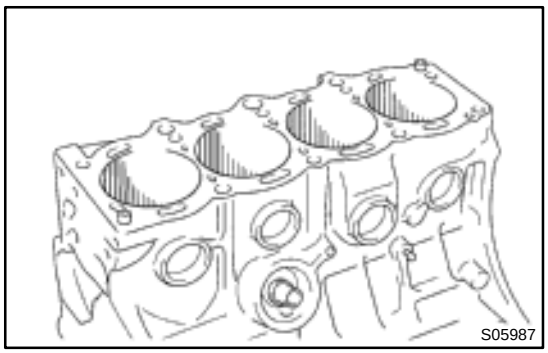

(b) Visually check the cylinder for vertical scratches.

If deep scratches are present, rebore all the 4 cylinders and replace all the 4 pistons. (See page EM–104) If necessary, replace the cylinder block.

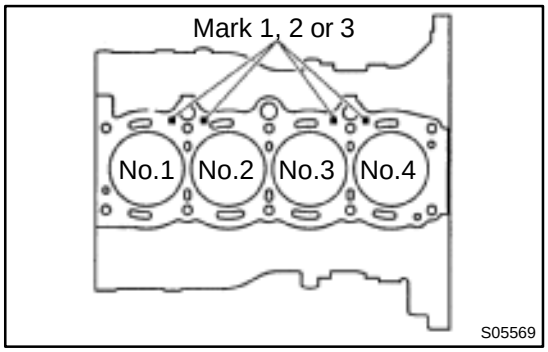

(c) Inspect the cylinder bore diameter.

HINT:

There are 3 sizes of the standard cylinder bore diameter, marked ”1”, ”2” and ”3” accordingly. The mark is stamped on the top of the cylinder block.

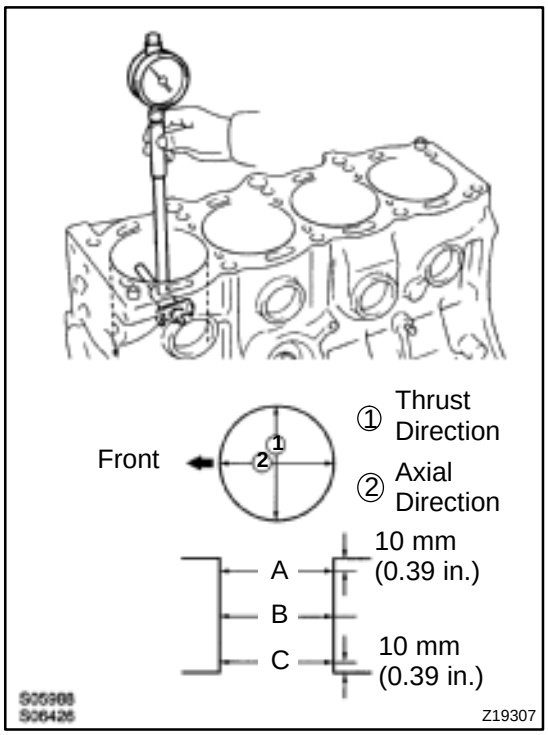

Using a cylinder gauge, measure the cylinder bore diameter at positions A, B and C in the thrust and axial directions.

Standard diameter:

Mark ”1”	87.000 – 87.010 mm (3.4252 – 3.4256 in.)
Mark ”2”	87.010 – 87.020 mm (3.4256 – 3.4262 in.)
Mark ”3”	87.020 – 87.030 mm (3.4260 – 3.4264 in.)

Maximum diameter:

STD	87.23 mm (3.4342 in.)
O/S 0.50	87.73 mm (3.4350 in.)

If the diameter is greater than maximum, rebore all the 4 cylinders and replace all the 4 pistons. (See page EM–104) If necessary, replace the cylinder block.

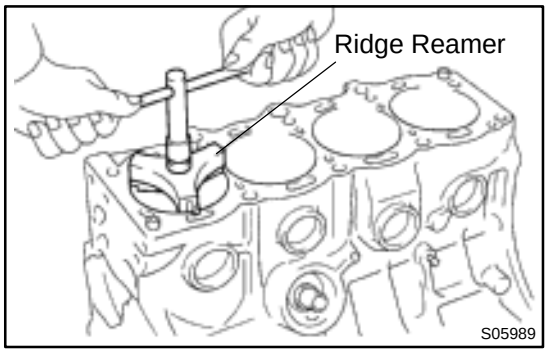

(d) Remove the cylinder ridge.
If the wear is less than 0.2 mm (0.008 in.), using a ridge reamer, grind the top of the cylinder.

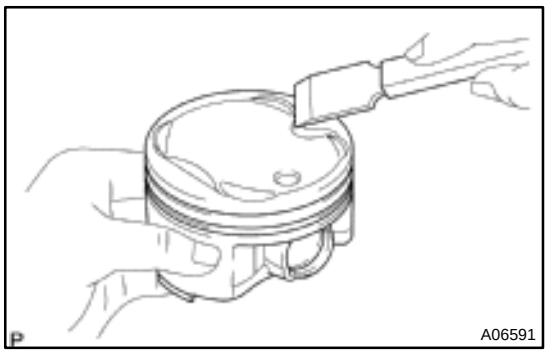

3. CLEAN PISTON

(a) Using a gasket scraper, remove the carbon from the piston top.

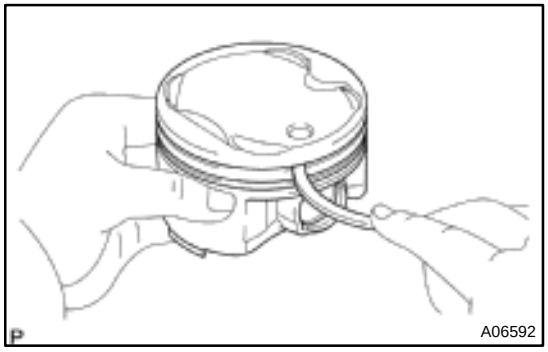

(b) Using a groove cleaning tool or broken ring, clean the piston ring grooves.

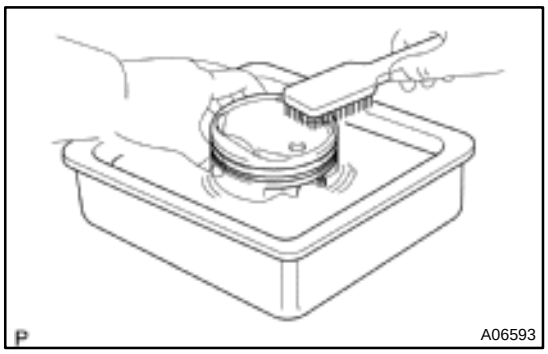

(c) Using solvent and a brush, thoroughly clean the piston.

NOTICE:

Do not use a wire brush.

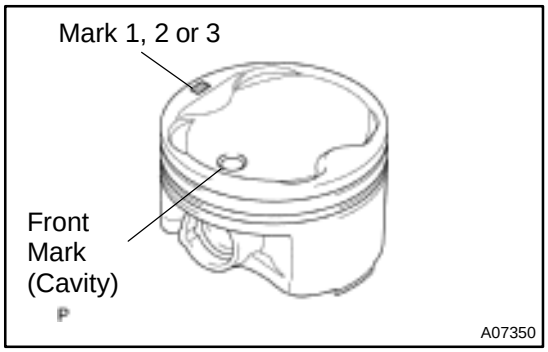

4. INSPECT PISTON AND CONNECTING ROD

(a) Inspect the piston oil clearance.

HINT:

There are 3 sizes of the standard piston diameter, marked ”1”, ”2” and ”3” accordingly. The mark is stamped on the piston top.

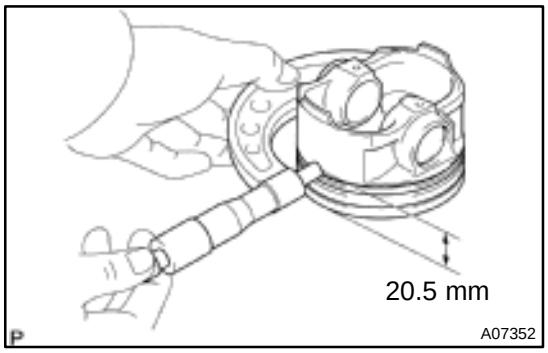

(1) Using a micrometer, measure the piston diameter at right angles to the piston pin center line, 20.5 mm (0.807 in.) from the piston head.

Piston diameter:

STD	Mark ”1”	86.815 – 86.825 mm (3.4179 – 3.4183 in.)
	Mark ”2”	86.825 – 86.835 mm (3.4183 – 3.4186 in.)
	Mark ”3”	86.835 – 86.845 mm (3.4186 – 3.4190 in.)
O/S 0.50		87.315 – 87.345 mm (3.4375 – 3.4387 in.)

(2) Measure the cylinder bore diameter in the thrust directions. (See step 2)

(3) Subtract the piston diameter measurement from the cylinder bore diameter measurement.

Standard oil clearance:

0.175 – 0.195 mm (0.0068 – 0.0076 in.)

Maximum oil clearance: 0.215 mm (0.0085 in.)

If the oil clearance is greater than maximum, replace all the 4 pistons and rebore all the 4 cylinders. (See page EM–104) If necessary, replace the cylinder block.

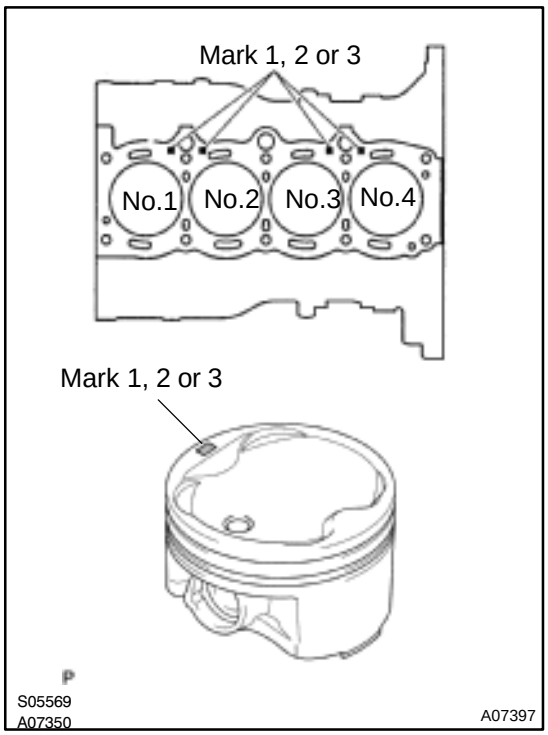

HINT:
Use new cylinder block:
Use a piston with the same number mark as the cylinder bore diameter marked on the cylinder block.

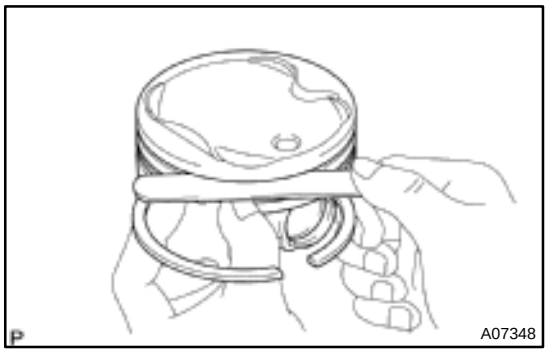

(b) Inspect the piston ring groove clearance.
Using a feeler gauge, measure the clearance between new piston ring and the wall of the ring groove.
Ring groove clearance (No.1, No.2):
0.030 – 0.070 mm (0.0012 – 0.0028 in.)

If the clearance is not as specified, replace the piston.

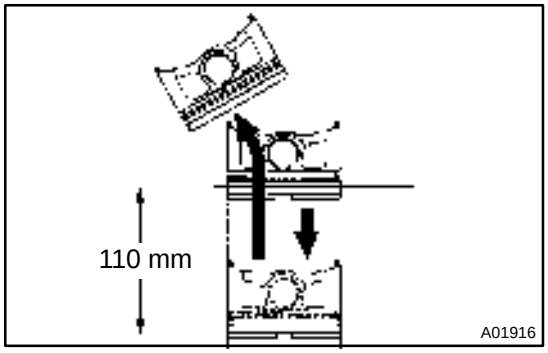

(c) Inspect the piston ring end gap.
(1) Insert the piston ring into the cylinder bore.
(2) Using a piston, push the piston ring a little beyond the bottom of the ring travel, 110 mm (4.33 in.) from the top of the cylinder block.

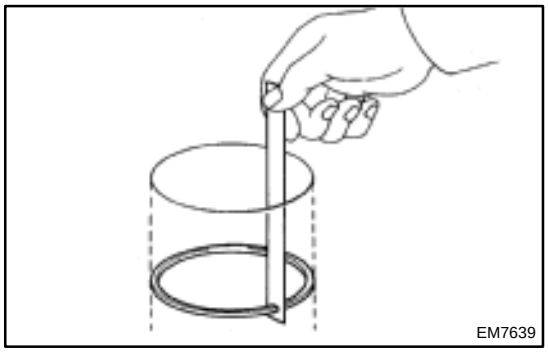

(3) Using a feeler gauge, measure the end gap.

Standard end gap:

No.1	0.270 – 0.490 mm (0.0106 – 0.0192 in.)
No.2	0.450 – 0.670 mm (0.0177 – 0.0263 in.)
Oil (Side rail)	0.100 – 0.470 mm (0.0039 – 0.0185 in.)

Maximum end gap:

No.1	1.09 mm (0.0429 in.)
No.2	1.27 mm (0.0499 in.)
Oil (Side rail)	1.07 mm (0.0421 in.)

If the end gap is greater than maximum, replace the piston ring.
If the end gap is greater than maximum, even with a new piston ring, rebore all the 4 cylinders (see page EM–104) or replace the cylinder block.

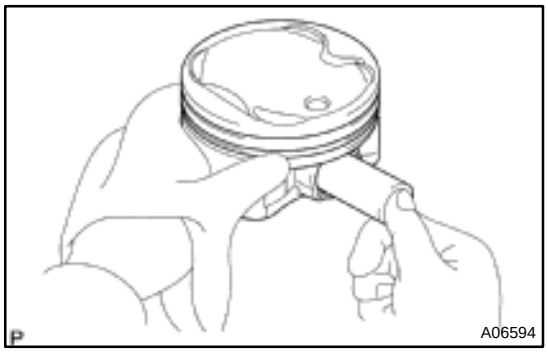

(d) Inspect the piston pin fit.
At 60°C (140°F), you should be able to push the piston pin into the piston pin hole with your thumb.

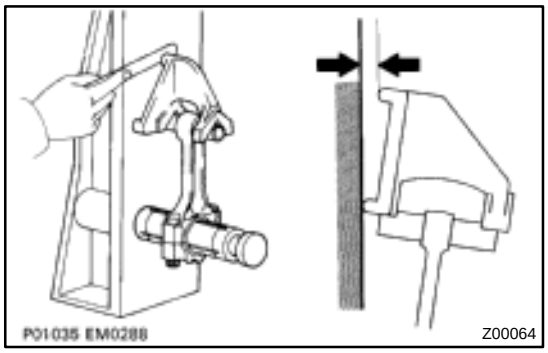

(e) Using a rod aligner and feeler gauge, check the connecting rod alignment.
(1) Check for bend.
Maximum bend:
0.05 mm (0.0020 in.) per 100 mm (3.94 in.)
If bend is greater than maximum, replace the connecting rod assembly.

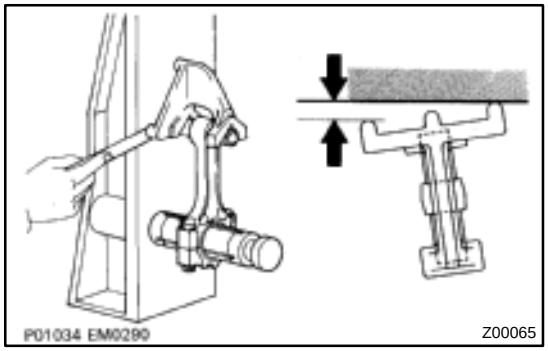

(2) Check for twist
Maximum twist:
0.15 mm (0.0059 in.) per 100 mm (3.94 in.)
If twist is greater than maximum, replace the connecting rod assembly.

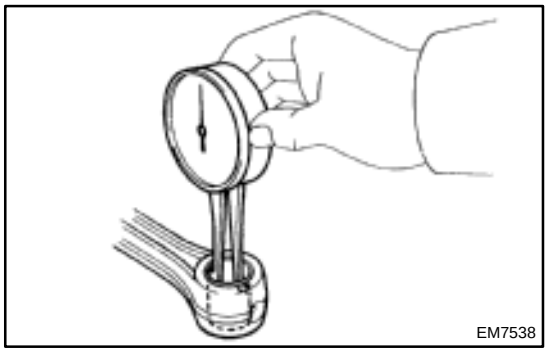

(f) Inspect the piston pin oil clearance.
(1) Using a caliper gauge, measure the inside diameter of the connecting rod bushing.
Bushing inside diameter:
22.005 – 22.017 mm (0.8663 – 0.8668 in.)

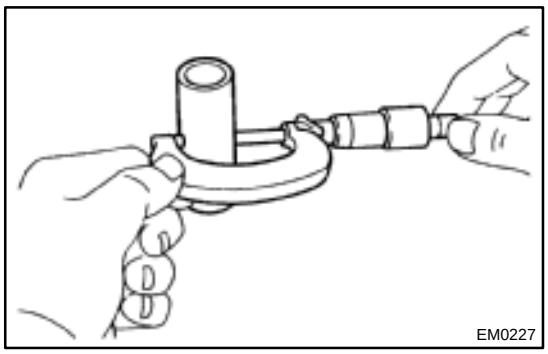
EM0227

(2) Using a micrometer, measure the piston pin diameter.

Piston pin diameter:
21.997 – 22.009 mm (0.8660 – 0.8665 in.)

(3) Subtract the piston pin diameter measurement from the bushing inside diameter measurement.

Standard oil clearance:
0.005 – 0.011 mm (0.0002 – 0.0004 in.)
Maximum oil clearance: 0.05 mm (0.0020 in.)

If the oil clearance is greater than maximum, replace the bushing. (See page EM–104) If necessary, replace the piston and piston pin as a set.

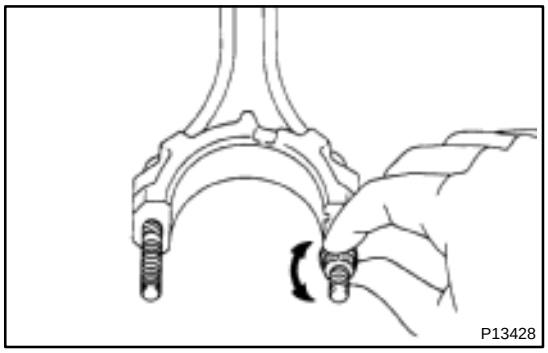
P13428

(g) Inspect the connecting rod bolts.

(1) Install the cap nut to the connecting rod bolt. Check that the cap nut can be turned easily by hand to the end of the thread.

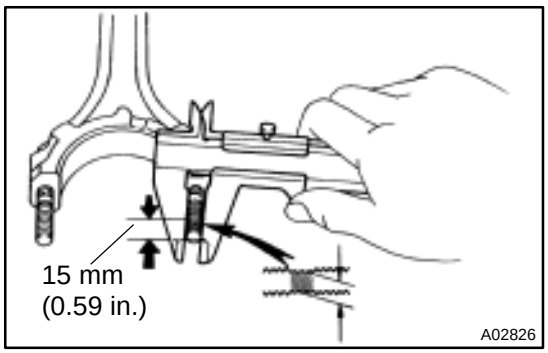

A02826

(2) If the cap nut cannot be turned easily, measure the outside diameter of the connecting rod bolt with a vernier caliper.

Standard diameter:
7.860 – 8.000 mm (0.3094 – 0.3150 in.)
Minimum diameter: 7.60 mm (0.2992 in.)

HINT:
If the location of this area cannot be judged by visual inspection, measure the outer diameter at the location shown in the illustration.
If the outside diameter is less than minimum, replace the connecting rod bolt and nut as a set.

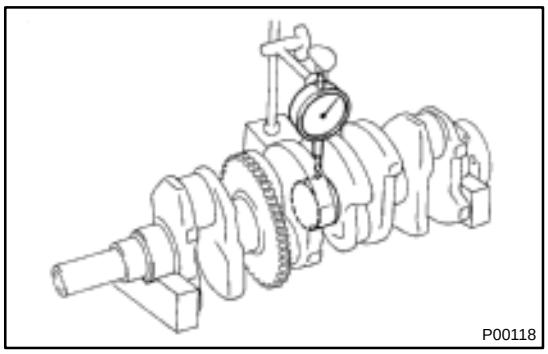

5. INSPECT CRANKSHAFT

(a) Inspect for circle runout.

(1) Place the crankshaft on V–blocks.

(2) Using a dial indicator, measure the circle runout at the center journal.

Maximum circle runout: 0.06 mm (0.0024 in.)

If the circle runout is greater than maximum, replace the crankshaft.

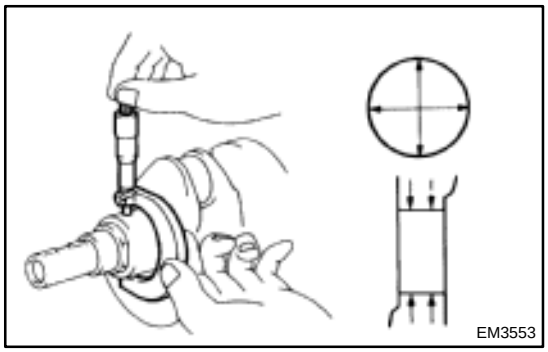

(b) Inspect the main journals and crank pins.

(1) Using a micrometer, measure the diameter of each main journal and crank pin.

Main journal diameter:

STD	54.988 – 55.003 mm (2.1653 – 2.1655 in.)
U/S 0.25	54.745 – 54.755 mm (2.1553 – 2.1557 in.)

Crank pin diameter:

STD	51.985 – 52.000 mm (2.0466 – 2.0472 in.)
U/S 0.25	51.745 – 51.755 mm (2.0372 – 2.0376 in.)

If the diameter is not as specified, check the oil clearance. (See page EM–86) If necessary, grind or replace the crankshaft.

(2) Check each main journal and crank pin for taper and out–of–round as shown.

Maximum taper and out–of–round:
0.02 mm (0.0008 in.)

If the taper and out–of–round is greater than maximum, replace the crankshaft.

6. IF NECESSARY, GRIND AND HONE MAIN JOURNALS AND/OR CRANK PINS

Grind and hone the main journals and/or crank pins to the finished undersized diameter. (See procedure in step 5) Install new main journal and/or crankshaft pin undersized bearings.

EM08K–03

REPLACEMENT

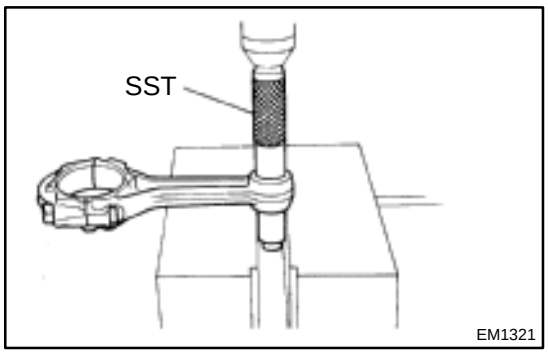

1. REPLACE CONNECTING ROD BUSHINGS

(a) Using SST and a press, press out the bushing.
SST 09222–30010

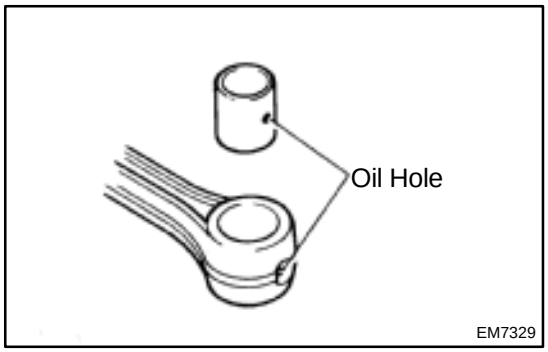

(b) Align the oil holes of a new bushing and the connecting rod.

(c) Using SST and a press, press in the bushing.
SST 09222–30010

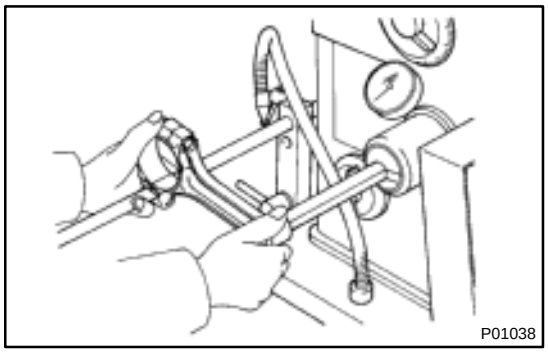

(d) Using a pin hole grinder, hone the bushing to obtain the standard specified clearance (See page EM–97) between the bushing and piston pin.

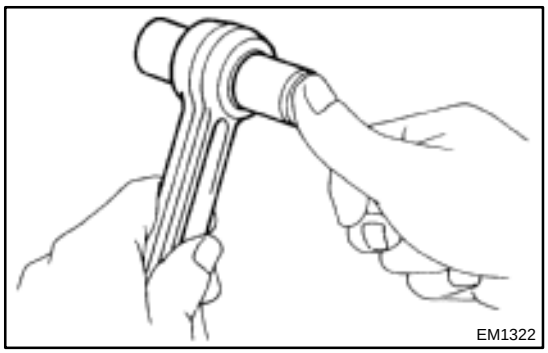

(e) Check the piston pin fit at normal room temperature. Coat the piston pin with engine oil, and push it into the connecting rod with your thumb.

2. REPLACE OVERSIZED (O/S) PISTONS FOR CYLINDER BORING

HINT:

Bore all the 4 cylinders for the O/S piston outside diameter.

Replace all the piston rings with ones to match the O/S pistons.

(a) Keep 4 new O/S pistons.
O/S 0.50 piston diameter:
87.350 – 87.380 mm (3.4390 – 3.4402 in.)

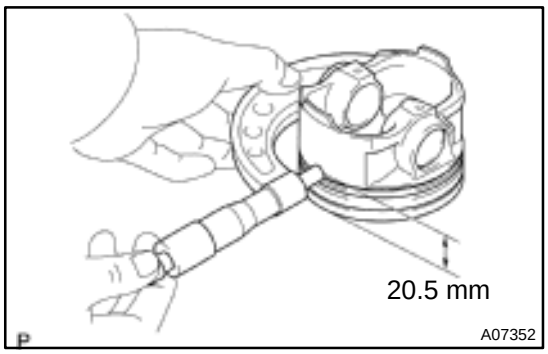

(b) Using a micrometer, measure the piston diameter at right angles to the piston pin center line, 20.5 mm (0.807 in.) from the piston head.

(c) Calculate the amount of each cylinder is to be rebored as follows:

Size to be rebored = P + C – H
P = Piston diameter
C = Piston oil clearance
0.175 – 0.195 mm (0.0068 – 0.0076 in.)
H = Allowance for honing
0.02 mm (0.0008 in.) or less

(d) Bore and hone the cylinders to calculated dimensions.

Maximum honing: 0.02 mm (0.0008 in.)

NOTICE:

Excess honing will destroy the finished roundness.

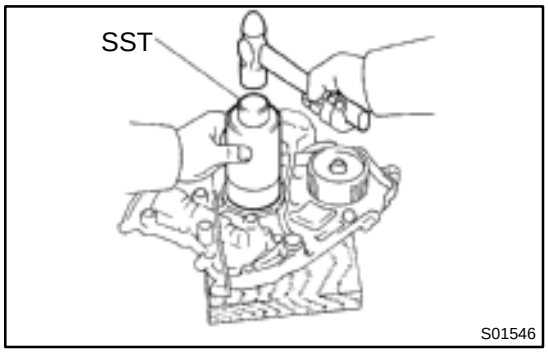

3. REPLACE CRANKSHAFT FRONT OIL SEAL

HINT:

There are 2 methods ((a) and (b)) to replace the oil seal.

(a) If the oil pump is removed from the cylinder block:

(1) Using a screwdriver and hammer, tap out the oil seal.

(2) Using SST and a hammer, tap in a new oil seal until its surface is flush with the oil pump body edge.

SST 09226–10010

(3) Apply MP grease to the oil seal lip.

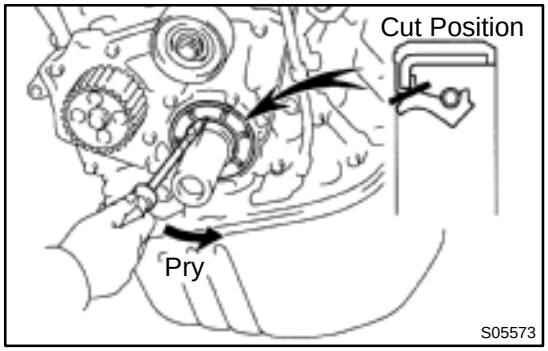

(b) If the oil pump is installed to the cylinder block:

(1) Using a knife, cut off the oil seal lip.

(2) Using a screwdriver, pry out the oil seal.

NOTICE:

Be careful not to damage the crankshaft. Tape the screwdriver tip.

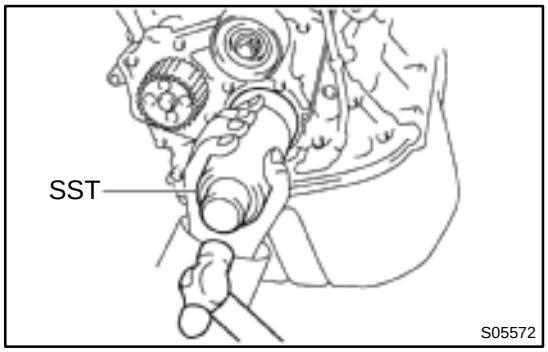

(3) Apply MP grease to a new oil seal lip.

(4) Using SST and a hammer, tap in the oil seal until its surface is flush with the oil pump body edge.

SST 09226–10010

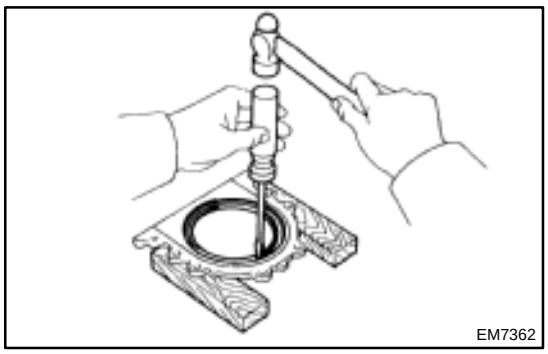
EM7362

4. REPLACE CRANKSHAFT REAR OIL SEAL

HINT:

there are 2 methods ((a) and (b)) to replace the oil seal.

(a) If the rear oil seal retainer is removed from the cylinder block:

(1) Using a screwdriver and hammer, tap out the oil seal.

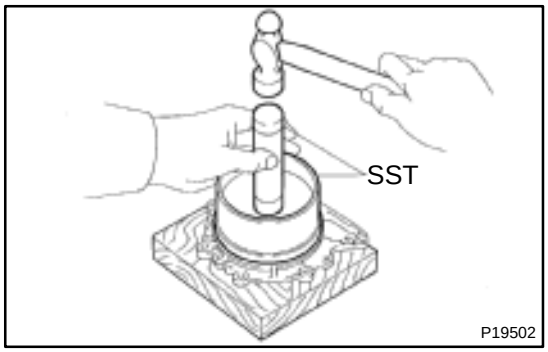

P19502

(2) Using SST and a hammer, tap in a new oil seal until its surface is flush with the rear oil seal retainer edge.

SST 09223–15030, 09950–70010 (09951–07100)

(3) Apply MP grease to the oil seal lip.

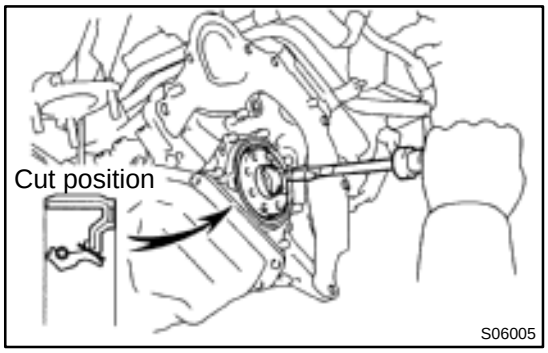

S06005

(b) If rear oil seal retainer is installed to cylinder block:

(1) Using a knife, cut off the oil seal lip.

(2) Using a screwdriver, pry out the oil seal.

NOTICE:

Be careful not to damage the crankshaft. Tape the screwdriver tip.

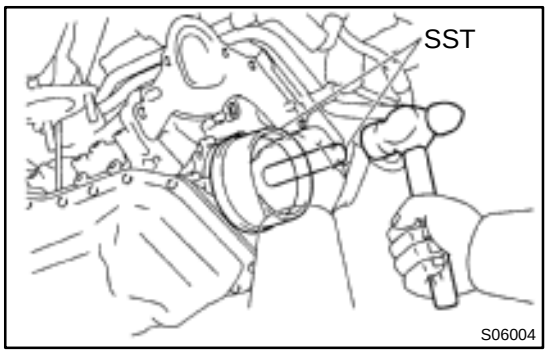

S06004

(3) Apply MP grease to a new oil seal lip.

(4) Using SST and a hammer, tap in the oil seal until its surface is flush with the rear oil seal retainer edge.

SST 09223–15030, 09950–70010 (09951–07100)

EM08L–03

REASSEMBLY

HINT:

Thoroughly clean all parts to be assembled.
Before installing the parts, apply new engine oil to all sliding and rotating surfaces.
Replace all gaskets, O–rings and oil seals with new parts.

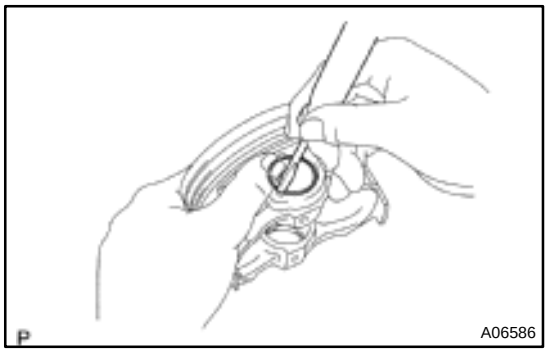

1. ASSEMBLE PISTON AND CONNECTING ROD

(a) Using a small screwdriver, install a new snap ring on one side of the piston pin hole.

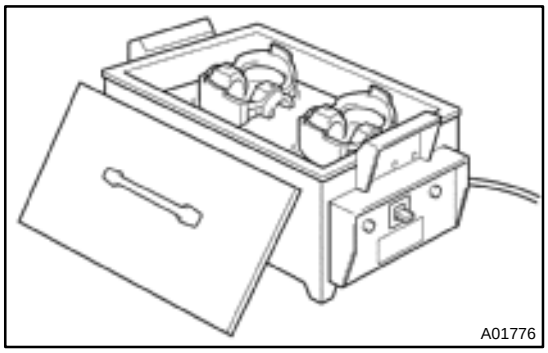

(b) Gradually heat the piston to 80 – 90°C (176 – 194°F).

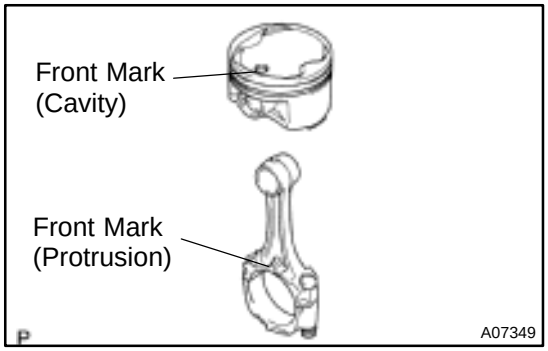

(c) Coat the piston pin with engine oil.
(d) Align the front marks of the piston and connecting rod, and push in the piston pin with your thumb.

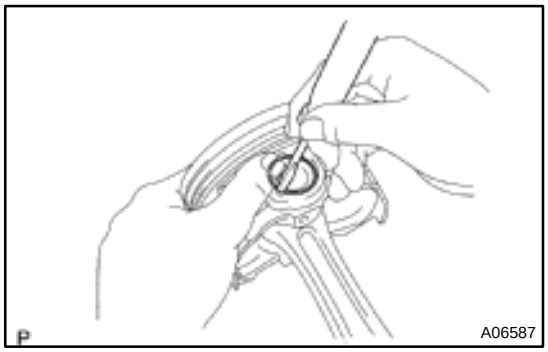

(e) Using a small screwdriver, install a new snap ring on the other side of the piston pin hole.

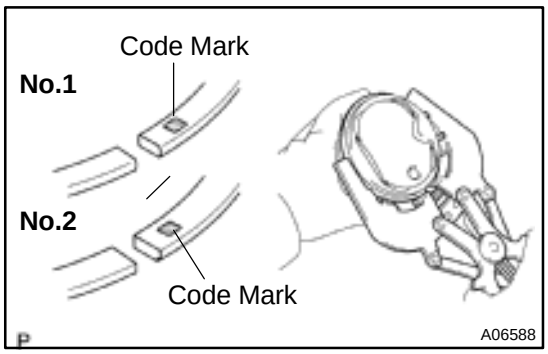

2. INSTALL PISTON RINGS

(a) Install the oil ring expander and 2 side rails by hand.

(b) Using a piston ring expander, install the No.2 and No.1 piston rings with the code mark facing upward.

Code mark:

No.1	1N or T
No.2	2N or 2T

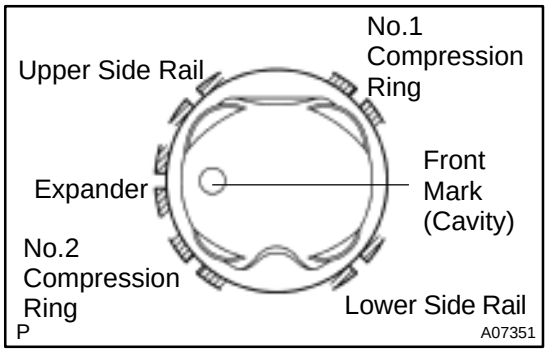

(c) Position the piston rings so that the ring ends are as shown.

NOTICE:

Do not align the ring ends.

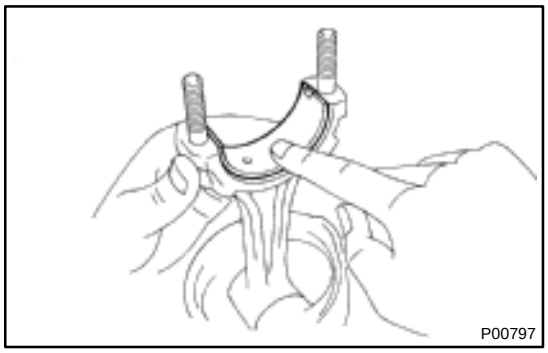

3. INSTALL BEARINGS

(a) Align the bearing claw with the groove of the connecting rod or connecting cap.

(b) Install the bearings in the connecting rod and connecting rod cap.

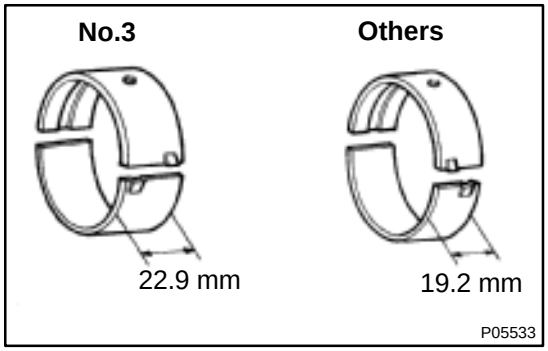

4. INSTALL MAIN BEARINGS

HINT:

Main bearings come in widths of 19.2 mm (0.756 in.) and 22.9 mm (0.902 in.). Install the 22.9 mm (0.902 in.) bearings in the No.3 cylinder block journal position with the main bearing cap. Install the 19.2 mm (0.756 in.) bearings in the other positions.

Upper bearings have an oil groove and oil holes; lower bearings do not.

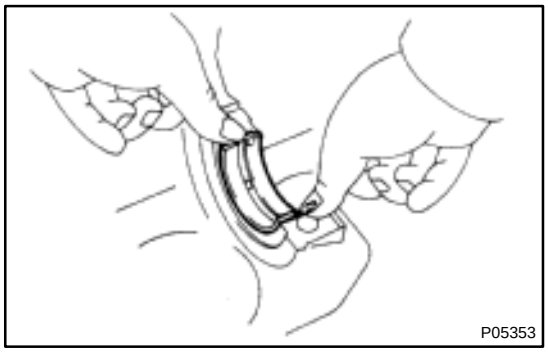

(a) Align the bearing claw with the claw groove of the cylinder block, and push in the 5 upper bearings.

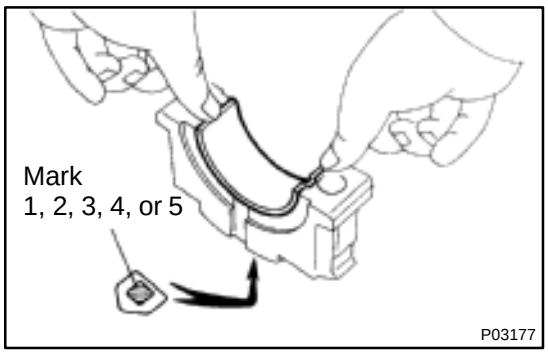

(b) Align the bearing claw with the claw groove of the main bearing cap, and push in the 5 lower bearings.

HINT:
A number is marked on each main bearing cap to indicate the installation position.

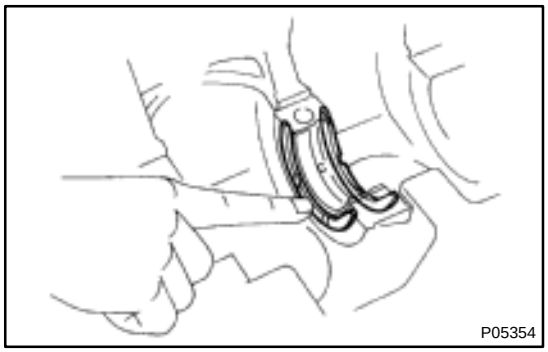

5. INSTALL UPPER THRUST WASHERS

Install the 2 thrust washers under the No.3 journal position of the cylinder block with the oil grooves facing outward.

6. PLACE CRANKSHAFT ON CYLINDER BLOCK

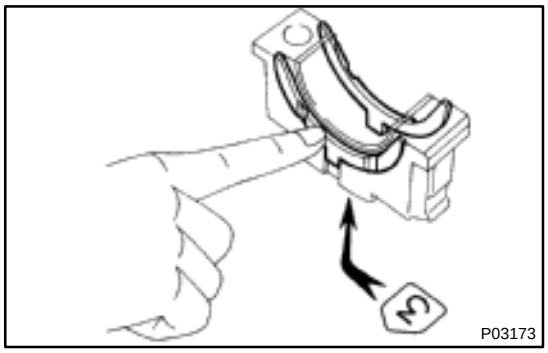

7. INSTALL MAIN BEARING CAPS AND LOWER THRUST WASHERS

(a) Install the 2 thrust washers on the No.3 bearing cap with the grooves facing outward.

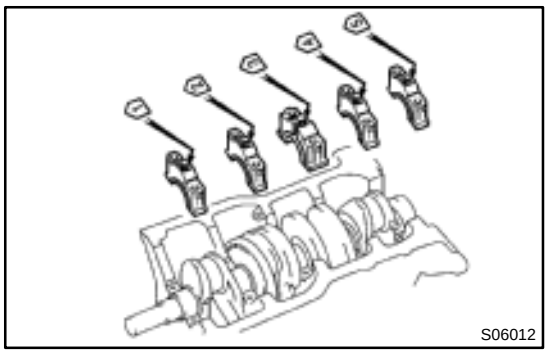

(b) Install the 5 main bearing caps in their proper locations.

HINT:
Each bearing cap has a number and front mark.

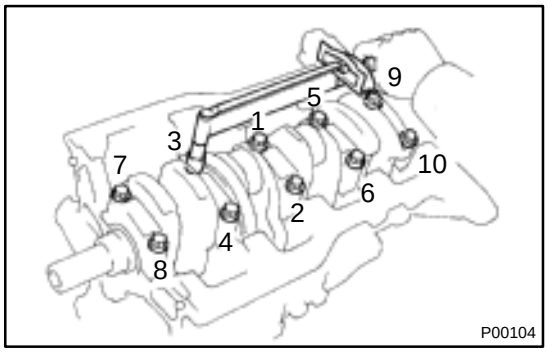

(c) Apply a light coat of engine oil on the threads and under the heads of the main bearing cap bolts.

(d) Install and uniformly tighten the 10 bolts of the main bearing cap in several passes, in the sequence shown.
Torque: 59 N·m (600 kgf·cm, 43 ft·lbf)

(e) Check that the crankshaft turns smoothly.

8. CHECK CRANKSHAFT THRUST CLEARANCE
(See page EM–86)

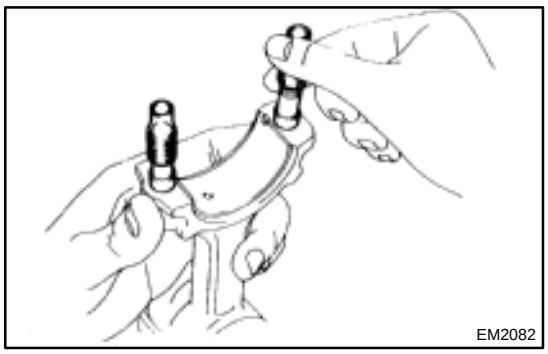

9. INSTALL PISTON AND CONNECTING ROD ASSEMBLES

(a) Cover the connecting rod bolts with a short piece of hose to protect the crankshaft from damage.

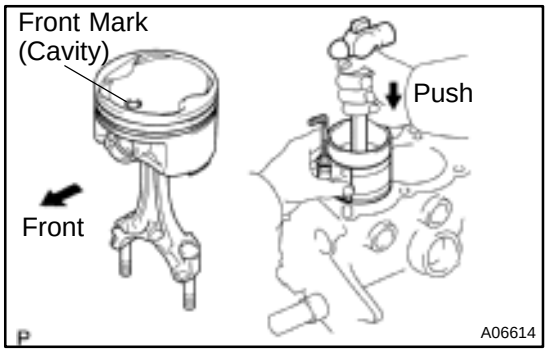

(b) Using a piston ring compressor, push the correctly numbered piston and connecting rod assemblies into each cylinder with the front mark of the piston facing forward.

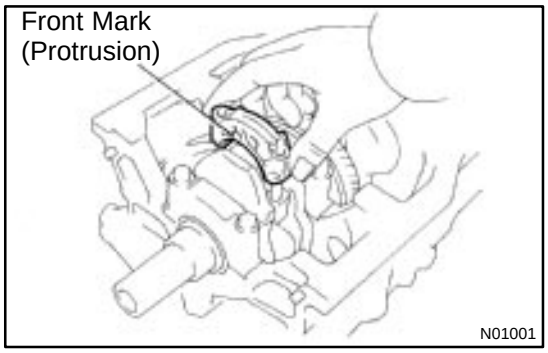

10. PLACE CONNECTING ROD CAP ON CONNECTING ROD

(a) Match the numbered connecting rod cap with the connecting rod.

(b) Install the connecting rod cap with the front mark facing forward.

11. INSTALL CONNECTING ROD CAP NUTS

HINT:

The cap nuts are tightened in 2 progressive steps (steps (b) and (d)).

If any one of the connecting rod bolts is broken or deformed, replace it.

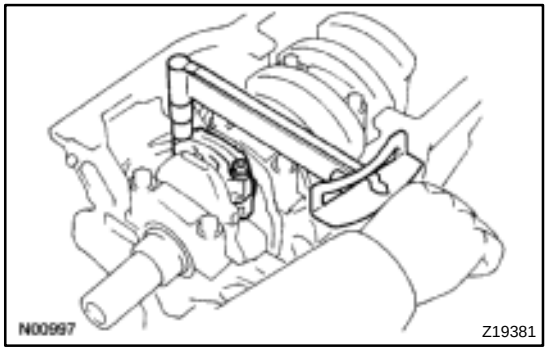

(a) Apply a light coat of engine oil on the threads and under the nuts of the connecting rod cap.

(b) Install and alternately tighten the 2 cap nuts in several passes.

Torque: 25 N·m (250 kgf·cm, 18 ft·lbf)

If any one of the cap nuts does not meet the torque specification, replace the connecting rod bolt and cap nut as a set.

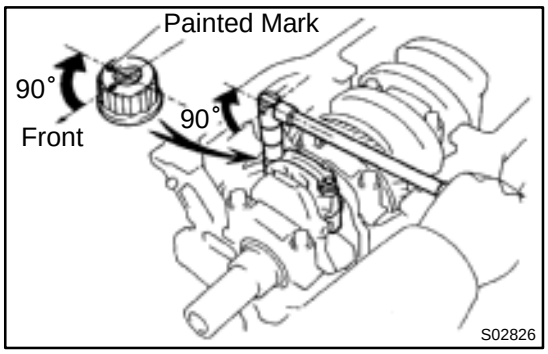

(c) Mark the front of the cap nut with the paint.
(d) Retighten the cap nuts 90° as shown.
(e) Check that the painted mark is now at a 90° angle to the front.
(f) Check that the crankshaft turns smoothly.

12. CHECK CONNECTING ROD THRUST CLEARANCE (See page EM–86)

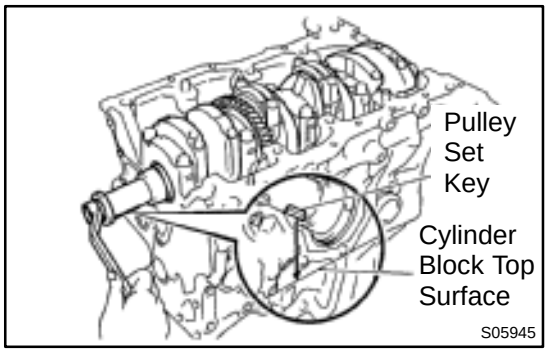

13. INSTALL ENGINE BALANCER

(a) Turn the crankshaft, and set the No.1 cylinder TDC as shown in the illustration.

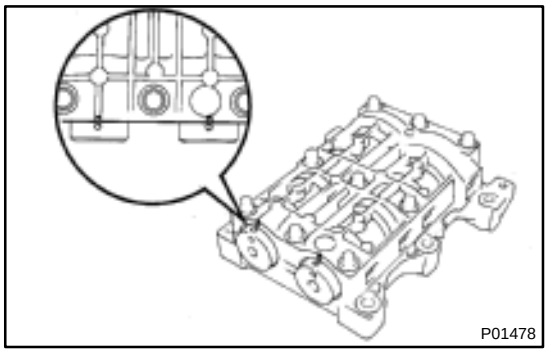

(b) Set the balance shafts so that the punch marks of the balance shafts are aligned with the grooves of the No.2 housing.

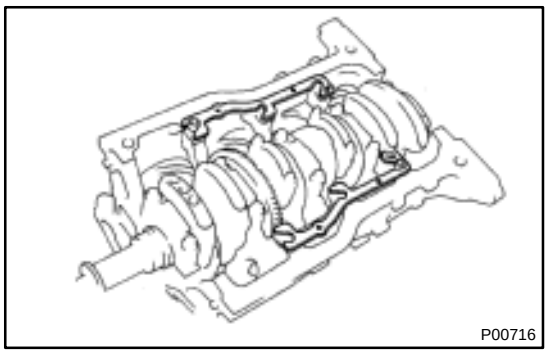

(c) Wipe clean the installation surface of the spacer.
(d) Place the spacers on the cylinder block.

HINT:
When replacing the crankshaft and/or balance shaft, use the thickest spacers.

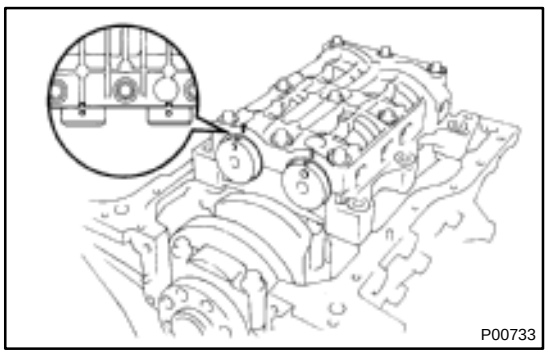

(e) Place the engine balancer on the cylinder block.
(f) Check that punch marks shown in the illustration of the balance shafts are aligned with the grooves of the No.2 housing.

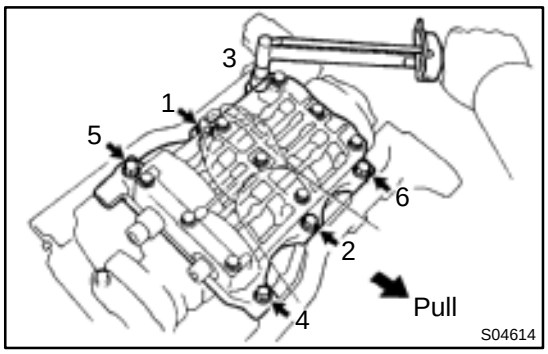

(g) While pulling the center part of the engine balancer in the direction of the arrow, uniformly tighten the 6 bolts in several passes, in the sequence shown.
Torque: 49 N·m (500 kgf·cm, 36 ft·lbf)

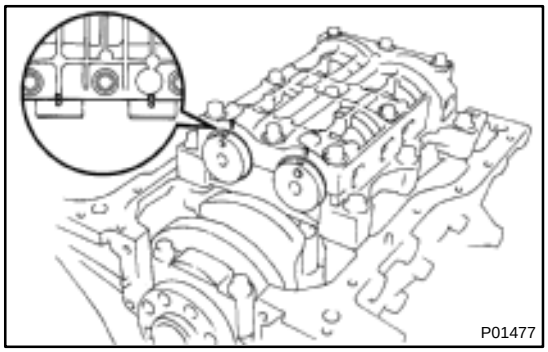

(h) Recheck that the punch marks of the balance shafts are aligned with the grooves of the No.2 housing.

14. CHECK AND ADJUST BACKLASH OF CRANKSHAFT GEAR AND NO.1 BALANCE SHAFT GEAR
(See page EM–86)

15. INSTALL REAR OIL SEAL RETAINER

Install a new gasket and the retainer with the 6 bolts.
Torque: 13 N·m (130 kgf·cm, 9 ft·lbf)

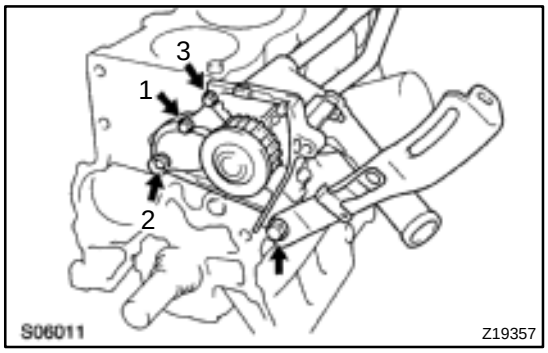

16. INSTALL WATER PUMP, WATER BYPASS PIPE AND OIL COOLER (w/ OIL COOLER) ASSEMBLY

(a) Install a new O–ring to the water pump cover.
(b) Install the water pump, water bypass pipe and oil cooler (w/ oil cooler) assembly with the 3 bolts. Tighten the bolts in the sequence shown.
Torque: 8.8 N·m (90 kgf·cm, 78 in.·lbf)
(c) Install the generator drive belt adjusting bar with the bolt.
Torque: 22 N·m (224 kgf·cm, 16 ft·lbf)
(d) w/ Oil Cooler:
Install the oil cooler. (See page LU–18)

17. INSTALL OIL FILTER (See page LU–2)

18. INSTALL KNOCK SENSOR 1 (See page SF–57)

19. INSTALL PS PUMP BRACKET

Install the PS pump bracket with the 3 bolts.
Torque: 43 N·m (440 kgf·cm, 32 ft·lbf)

20. INSTALL OIL PUMP AND OIL PAN

(a) Install the oil pump and oil pan. (See page LU–13)
(b) Install the crankshaft position sensor connector to the generator drive belt adjusting bar.

21. INSTALL OIL DIPSTICK

22. INSTALL CYLINDER HEAD ASSEMBLY

(a) Install the cylinder head assembly. (See page EM–33)
(b) Install the 2 bolts holding the water bypass pipe to the cylinder head.
Torque: 19 N·m (195 kgf·cm, 14 ft·lbf)
(c) Install the VSV for EGR to the cylinder head with the bolt.
(d) Connect the knock sensor 1 connector.
(e) Connect the crankshaft position sensor connector.

(f) Install the wire clamp to the generator drive belt adjusting bar.

(g) Connect the IAC valve water bypass hose to the water bypass pipe.

(h) Connect the water bypass hose (from the water bypass pipe) to the water outlet.

(i) Install the camshafts. (See page EM–53)

(j) Install the cylinder head cover.

(1) Install the cylinder head cover. (See page EM–53)

(2) Connect the PCV hose to the intake manifold.

(k) Install the No.3 timing belt cover with the 3 bolts.

Torque: 7.8 N·m (80 kgf·cm, 69 in.·lbf)

23. INSTALL TIMING BELT AND PULLEYS
(See page EM–23)

24. DISCONNECT ENGINE FROM ENGINE STAND

EXHAUST SYSTEM

COMPONENTS

EM08M–03

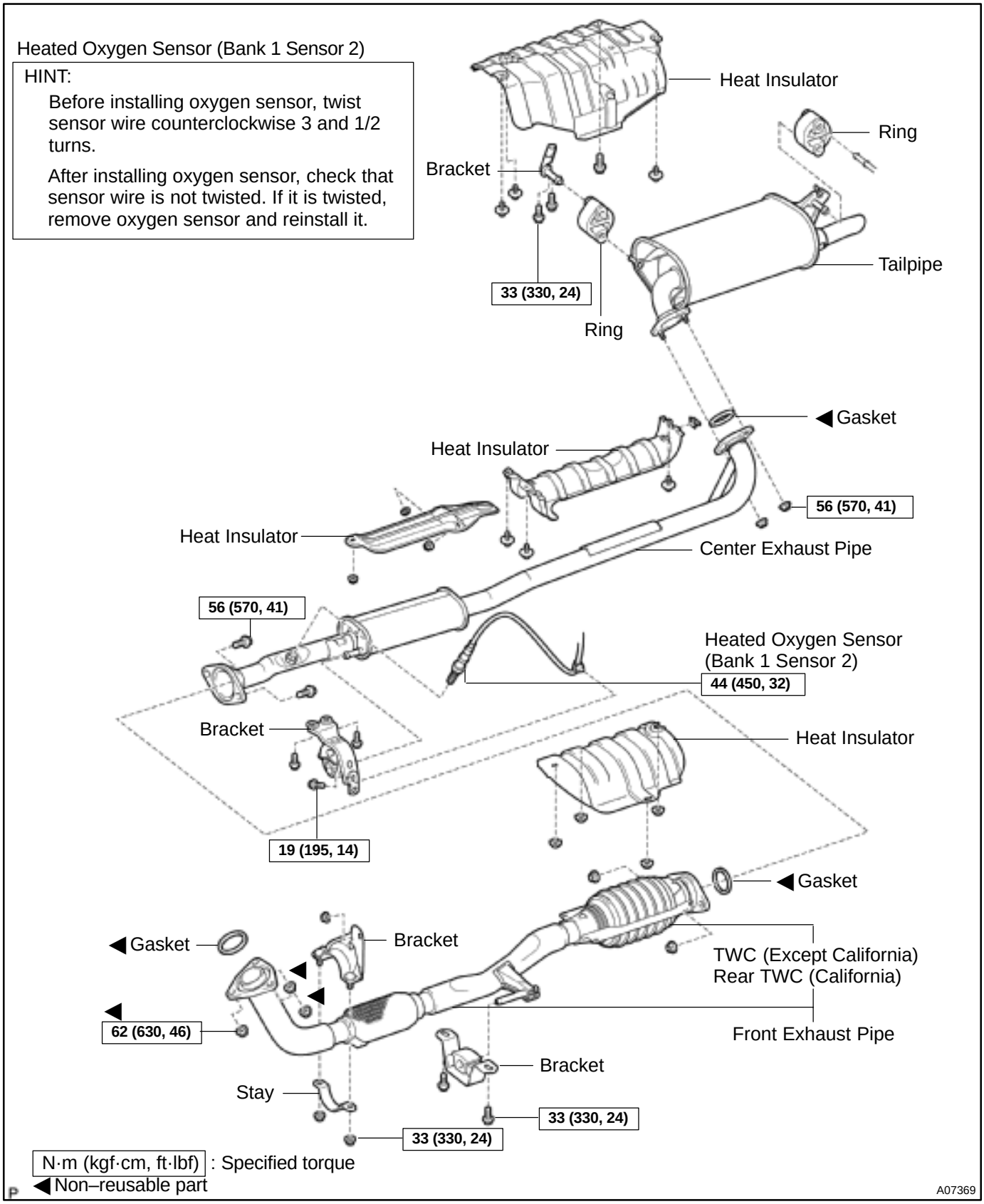

CO/HC

EM04I–04

INSPECTION

HINT:

This check is used only to determine whether or not the idle CO/HC complies with regulations.

1. INITIAL CONDITIONS

(a) Engine at normal operating temperature
(b) Air cleaner installed
(c) All pipes and hoses of air induction system connected
(d) All accessories switched OFF
(e) All vacuum lines properly connected

HINT:

All vacuum hoses for EGR systems, etc. should be properly connected.

(f) SFI system wiring connectors fully plugged
(g) Ignition timing check correctly
(h) Transmission in neutral position
(i) Tachometer and CO/HC meter calibrated by hand

2. START ENGINE

3. RACE ENGINE AT 2,500 RPM FOR APPROX. 180 SECONDS

4. INSERT CO/HC METER TESTING PROBE AT LEAST 40 cm (1.3 ft) INTO TAILPIPE DURING IDLING

5. IMMEDIATELY CHECK CO/HC CONCENTRATION AT IDLE AND/OR 2,500 RPM

HINT:

When doing the 2 mode (idle and 2,500 rpm) test, these measurement order prescribed by the applicable local regulations.

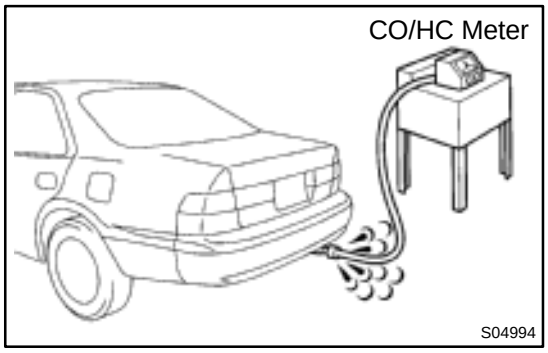

If the CO/HC concentration dose not comply with regulations, troubleshoot in the order given below.
See the table below for possible causes, then inspect and correct the applicable causes if necessary.

CO	HC	Problems	Causes
Normal	High	Rough idle	1. Faulty ignitions: Incorrect timing Fouled, shorted or improperly gapped plugs Open or crossed high–tension cords 2. Incorrect valve clearance 3 Leaky EGR valve 4.Leaky intake and exhaust valves 5.Leaky cylinder
Low	High	Rough idle (Filtrating HC reading)	1. Vacuum leaks: PCV hose EGR valve Intake manifold Air intake chamber Throttle body IAC valve Brake booster line 2. Lean mixture causing misfire
High	High	Rough idle (Black smoke from exhaust)	1. Restricted air filter 2. Faulty SFI system Faulty pressure regulator Defective ECT sensor Faulty ECM Faulty injectors Faulty throttle position sensor Faulty MAF meter

COMPRESSION

INSPECTION

EM04J–03

HINT:

If there is lack of power, excessive oil consumption or poor fuel economy, measure the compression pressure.

1. WARM UP AND STOP ENGINE

Allow the engine to warm up to normal operating temperature.

2. REMOVE IGNITION COILS AND HIGH–TENSION CORDS (See page IG–7)

3. REMOVE SPARK PLUGS

Using a 16 mm plug wrench, remove the 6 spark plugs.

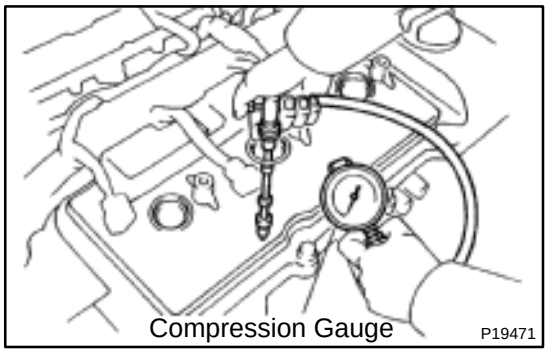
Compression Gauge P19471

4. CHECK CYLINDER COMPRESSION PRESSURE

(a) Insert a compression gauge into the spark plug hole.

(b) Fully open the throttle.

(c) While cranking the engine, measure the compression pressure.

HINT:

Always use a fully charged battery to obtain engine speed of 250 rpm or more.

(d) Repeat steps (a) through (c) for each cylinder.

NOTICE:

This measurement must be done in as short a time as possible.

Compression pressure:
1,500 kPa (15.3 kgf/cm^2, 218 psi)
Minimum pressure: 1,000 kPa (10.2 kgf/cm^2, 145 psi)
Difference between each cylinder:
100 kPa (1.0 kgf/cm^2, 15 psi) or less

(e) If the cylinder compression in 1 or more cylinders is low, pour a small amount of engine oil into the cylinder through the spark plug hole and repeat steps (a) through (c) for cylinders with low compression.

If adding oil helps the compression, it is likely that the piston rings and/or cylinder bore are worn or damaged.

If pressure stays low, a valve may be sticking or seating is improper, or there may be leakage past the gasket.

5. REINSTALL SPARK PLUGS

6. INSTALL IGNITION COILS AND HIGH–TENSION CORDS (See page IG–8)

VALVE CLEARANCE

INSPECTION

EM04K–04

HINT:

Inspect and adjust the valve clearance when the engine is cold.

1. REMOVE RH FENDER APRON SEAL

2. DRAIN ENGINE COOLANT

3. REMOVE V–BANK COVER

(a) Using a 5 mm hexagon wrench, remove the 2 nuts.

(b) Disconnect the 2 clips, and remove the cover.

4. REMOVE HIGH–TENSION CODE SET
(See page IG–7)

5. REMOVE AIR INTAKE CHAMBER ASSEMBLY
(See page EM–32)

6. REMOVE IGNITION COILS

7. DISCONNECT RADIATOR HOSE FROM WATER OUTLET

8. REMOVE CYLINDER HEAD COVERS
(See page EM–32)

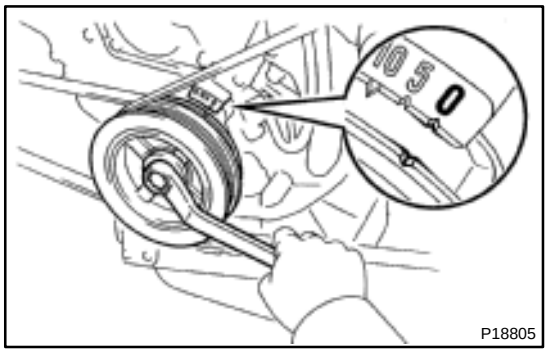

9. SET NO.1 CYLINDER TO TDC/COMPRESSION

(a) Turn the crankshaft pulley, and align its groove with the timing mark ”0” of the No.1 timing belt cover.

(b) Check that the valve lifters on the No.1 (IN and EX) are loose.

If not, turn the crankshaft 1 revolution (360˚) and align the mark as above.

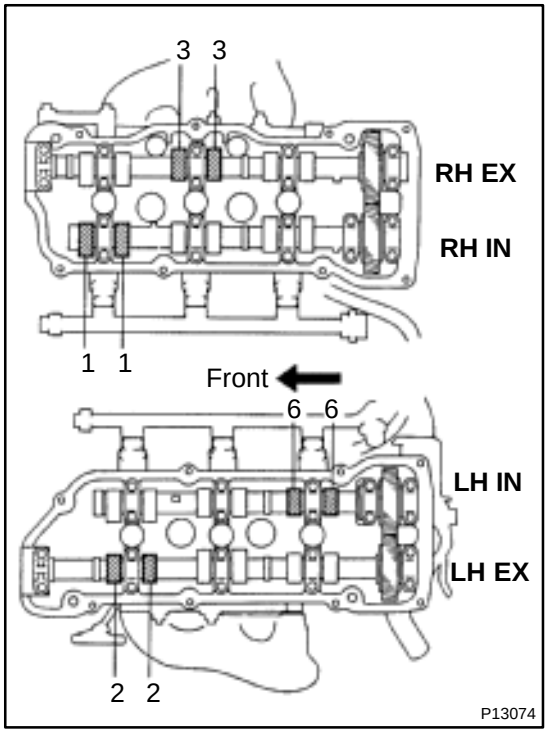

10. INSPECT VALVE CLEARANCE

(a) Check only those valves indicated in the illustration.

(1) Using a feeler gauge, measure the clearance between the valve lifter and camshaft.

(2) Record out of specification valve clearance measurements. They will be used later to determine the required replacement adjusting shim.

Valve clearance (Cold):

Intake	0.15 – 0.25 mm (0.006 – 0.010 in.)
Exhaust	0.25 – 0.35 mm (0.010 – 0.014 in.)

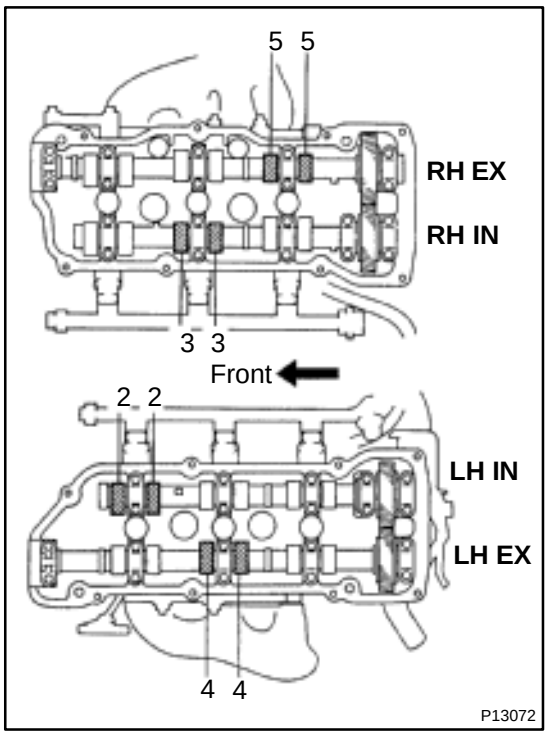

(b) Turn the crankshaft 2/3 of a revolution (240˚), and check only the valves indicated in the illustration. Measure the valve clearance. (See step (a))

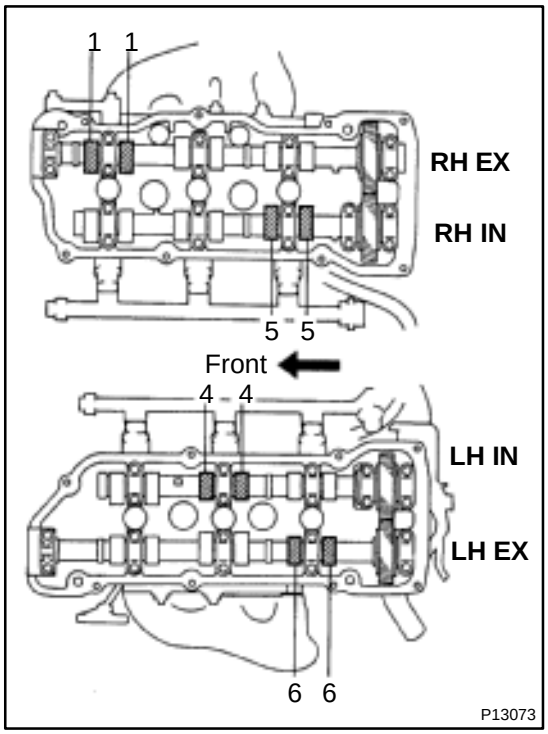

(c) Turn the crankshaft a further 2/3 of a revolution (240˚), and check only the valves indicated in the illustration. Measure the valve clearance. (See step (a))

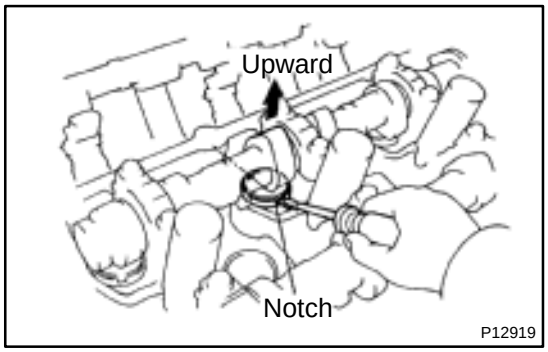

11. ADJUST VALVE CLEARANCE

(a) Remove the adjusting shim.

(1) Turn the camshaft so that the cam lobe for the valve to be adjusted faces up.

(2) Turn the valve lifter with a screwdriver so that the notches are perpendicular to the camshaft.

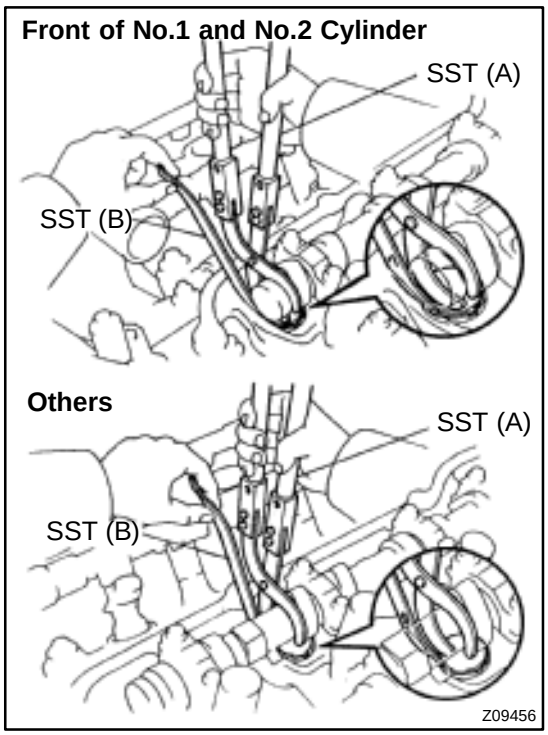

(3) Using SST (A), press down the valve lifter and place SST (B) between the camshaft and valve lifter. Remove SST (A).

SST 09248–55040 (09248–05410, 09248–05420)

HINT:

Apply SST (B) at a slight angle on the side marked with ”9” or ”7”, at the position shown in the illustration.

When SST (B) is inserted too deeply, it will get pinched by the shim. To prevent it from being stuck, insert it gently from the intake side, at a slight angle.

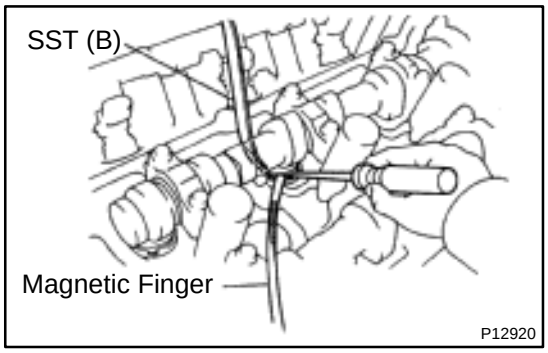

Using a small screwdriver and magnetic finger, remove the adjusting shim.

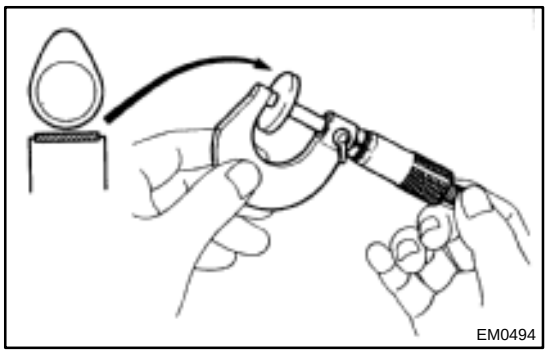

(b) Determine the replacement adjusting shim size according to these Formula or Charts:

(1) Using a micrometer, measure the thickness of the removed shim.

(2) Calculate the thickness of a new shim so the valve clearance comes within the specified value.

T ..... Thickness of used shim

A ..... Measured valve clearance

N ..... Thickness of new shim

Intake

N = T + (A – 0.20 mm (0.008 in.))

Exhaust

N = T + (A – 0.30 mm (0.012 in.))

(3) Select a new shim with a thickness as close as possible to the calculated values.

HINT:

Shims are available in 17 sizes in increments of 0.050 mm (0.0020 in.), from 2.500 mm (0.0984 in.) to 3.300 mm (0.1299 in.).

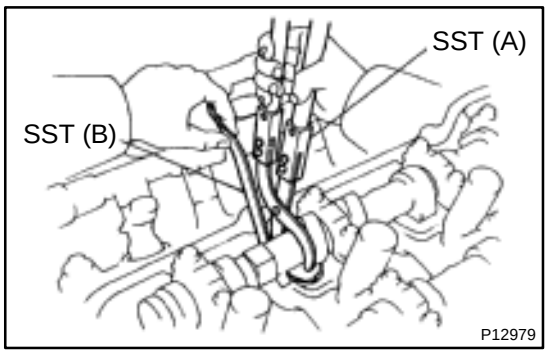

(c) Install a new adjusting shim.
  (1) Place a new adjusting shim on the valve lifter, with imprinted numbers facing down.
  (2) Press down the valve lifter with SST (A), and remove SST (B).

SST 09248–55040 (09248–05410, 09248–05420)

(d) Recheck the valve clearance.

12. REINSTALL CYLINDER HEAD COVERS
(See page EM–57)
13. CONNECT RADIATOR HOSE TO WATER OUTLET
14. REINSTALL IGNITION COILS
15. REINSTALL AIR INTAKE CHAMBER ASSEMBLY
(See page EM–57)
16. INSTALL HIGH–TENSION CORD SET
(See page IG–8)
17. INSTALL V–BANK COVER
18. REFILL WITH ENGINE COOLANT
19. START ENGINE AND CHECK FOR LEAKS
20. REINSTALL RH FENDER APRON SEAL

Adjusting Shim Selection Chart (Intake)

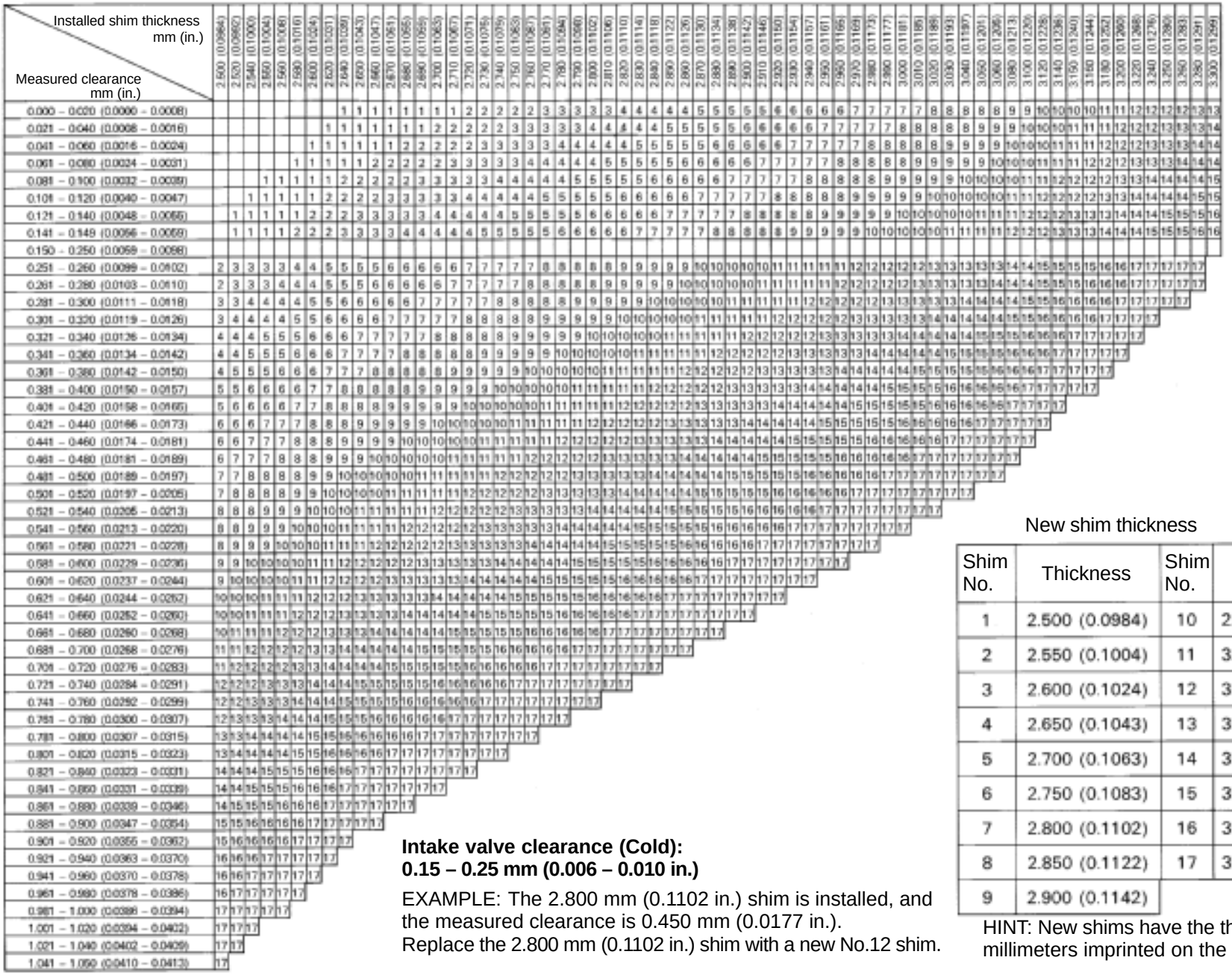

V00719

Intake valve clearance (Cold):
0.15 – 0.25 mm (0.006 – 0.010 in.)

EXAMPLE: The 2.800 mm (0.1102 in.) shim is installed, and the measured clearance is 0.450 mm (0.0177 in.).
Replace the 2.800 mm (0.1102 in.) shim with a new No.12 shim.

New shim thickness mm (in.)

Shim No.	Thickness	Shim No.	Thickness
1	2.500 (0.0984)	10	2.950 (0.1161)
2	2.550 (0.1004)	11	3.000 (0.1181)
3	2.600 (0.1024)	12	3.050 (0.1201)
4	2.650 (0.1043)	13	3.100 (0.1220)
5	2.700 (0.1063)	14	3.150 (0.1240)
6	2.750 (0.1083)	15	3.200 (0.1260)
7	2.800 (0.1102)	16	3.250 (0.1280)
8	2.850 (0.1122)	17	3.300 (0.1299)
9	2.900 (0.1142)		

HINT: New shims have the thickness in millimeters imprinted on the face.

Adjusting Shim Selection Chart (Exhaust)

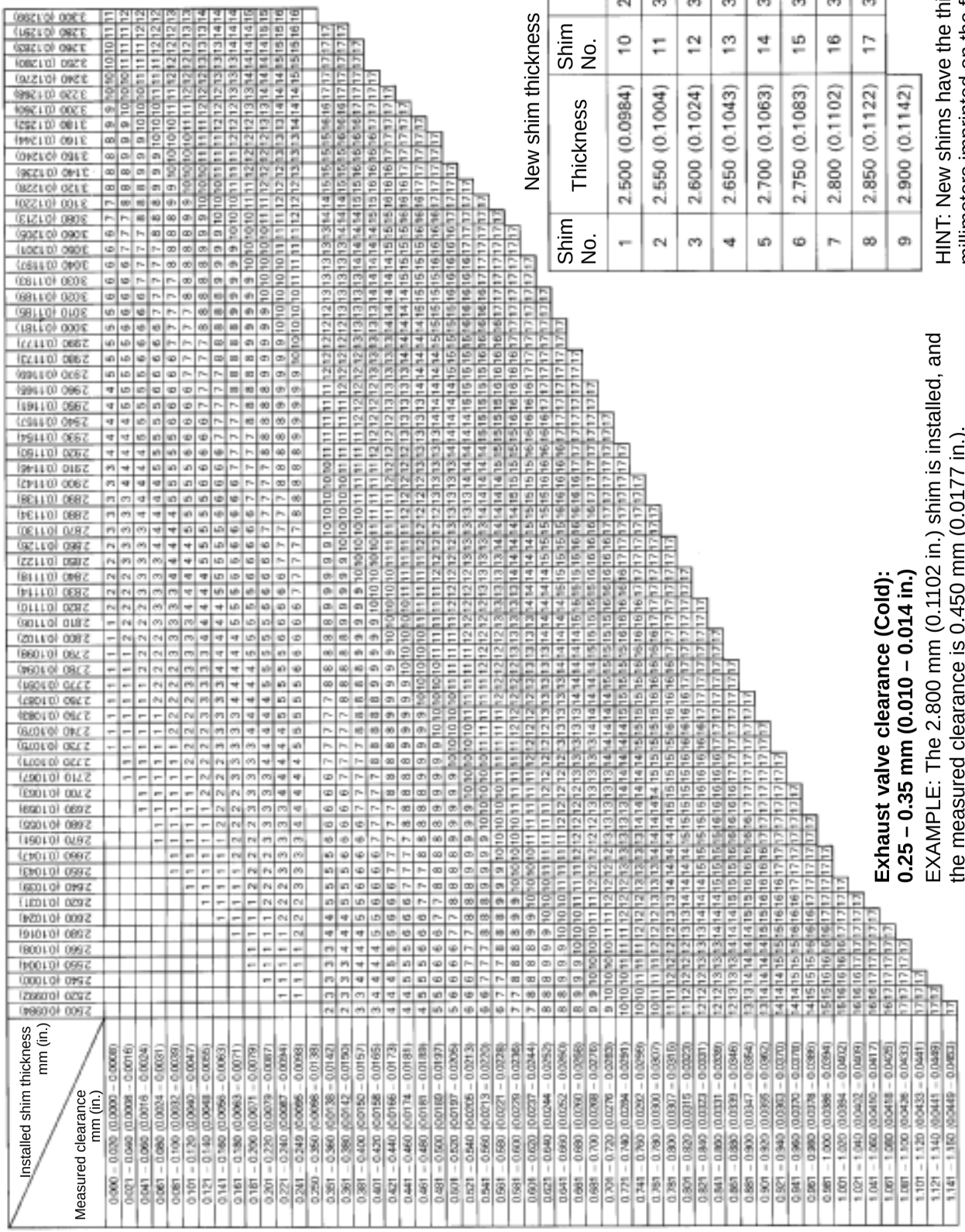

New shim thickness mm (in.)

Shim No.	Thickness	Shim No.	Thickness
1	2.500 (0.0984)	10	2.950 (0.1161)
2	2.550 (0.1004)	11	3.000 (0.1181)
3	2.600 (0.1024)	12	3.050 (0.1201)
4	2.650 (0.1043)	13	3.100 (0.1220)
5	2.700 (0.1063)	14	3.150 (0.1240)
6	2.750 (0.1083)	15	3.200 (0.1260)
7	2.800 (0.1102)	16	3.250 (0.1280)
8	2.850 (0.1122)	17	3.300 (0.1299)
9	2.900 (0.1142)		

HINT: New shims have the thickness in millimeters imprinted on the face.

Exhaust valve clearance (Cold):
0.25 – 0.35 mm (0.010 – 0.014 in.)

EXAMPLE: The 2.800 mm (0.1102 in.) shim is installed, and the measured clearance is 0.450 mm (0.0177 in.).
Replace the 2.800 mm (0.1102 in.) shim with a new No.12 shim.

V00720

IGNITION TIMING

EM04L–03

INSPECTION

1. WARM UP ENGINE

Allow the engine to warm up to normal operating temperature.

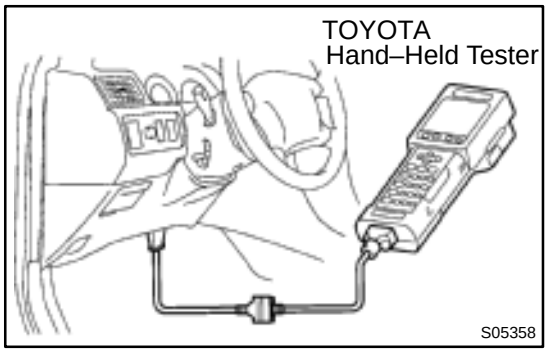

2. CONNECT TOYOTA HAND–HELD TESTER OR OBDII SCAN TOOL

(a) Connect a TOYOTA hand–held tester or OBDII scan tool to the DLC3.

(b) Please refer to the TOYOTA hand–held tester or OBDII scan tool operator's manual for further details.

3. CONNECT TIMING LIGHT TO ENGINE

Connect the tester probe of a timing light to the No.1 high–tension cord for No.4 cylinder.

4. CHECK IDLE SPEED

(a) Race the engine speed at 2,500 rpm for approx. 90 seconds.

(b) Check the idle speed.
Idle speed: 700 ± 50 rpm

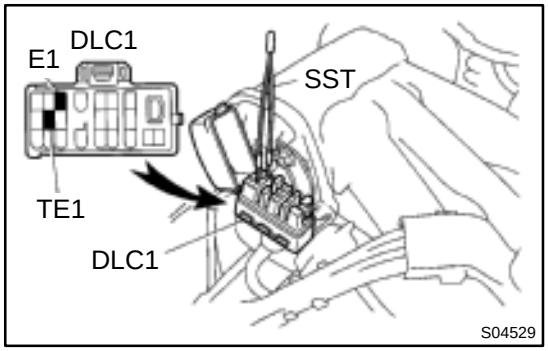

5. INSPECT IGNITION TIMING

(a) Using SST, connect terminals TE1 and E1 of the DLC1.
SST 09843–18020

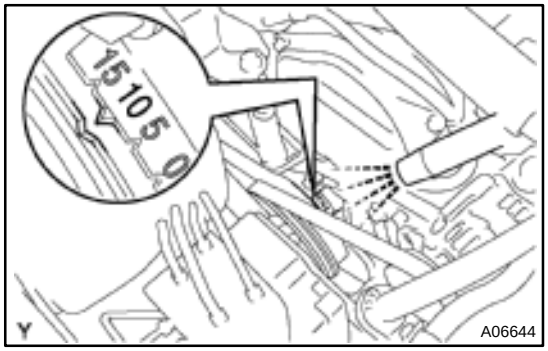

(b) Using a timing light, check the ignition timing.
Ignition timing: 8 – 12˚ BTDC @ idle
(Transmission in neutral position)

(c) Remove the SST from the DLC1.
SST 09843–18020

6. FURTHER CHECK IGNITION TIMING
Ignition timing: 7 – 24° BTDC @ idle
(Transmission in neutral position)

HINT:

The timing mark moves in a range between 7° and 24°.

7. DISCONNECT TIMING LIGHT FROM ENGINE

8. DISCONNECT TOYOTA HAND–HELD TESTER OR OBDII SCAN TOOL

IDLE SPEED

EM0YN–01

INSPECTION

1. INITIAL CONDITIONS

(a) Engine at normal operating temperature
(b) Air cleaner installed
(c) All pipes and hoses of air induction system connected
(d) All accessories switched OFF
(e) All vacuum lines properly connected

HINT:

All vacuum hoses for EGR system, etc. should be properly connected.

(f) SFI system wiring connectors fully plugged
(g) Ignition timing check correctly
(h) Transmission in neutral position

2. CONNECT TOYOTA HAND–HELD TESTER OR OBDII SCAN TOOL (See page EM–10)

3. INSPECT IDLE SPEED

(a) Race the engine speed at 2,500 rpm for approx. 90 seconds.
(b) Check the idle speed.

Idle speed: 700 ± 50 rpm

If the idle speed is not as specified, check the IAC valve and air intake system.

4. DISCONNECT TOYOTA HAND–HELD TESTER OR OBDII SCAN TOOL

TIMING BELT

COMPONENTS

EM04N–03

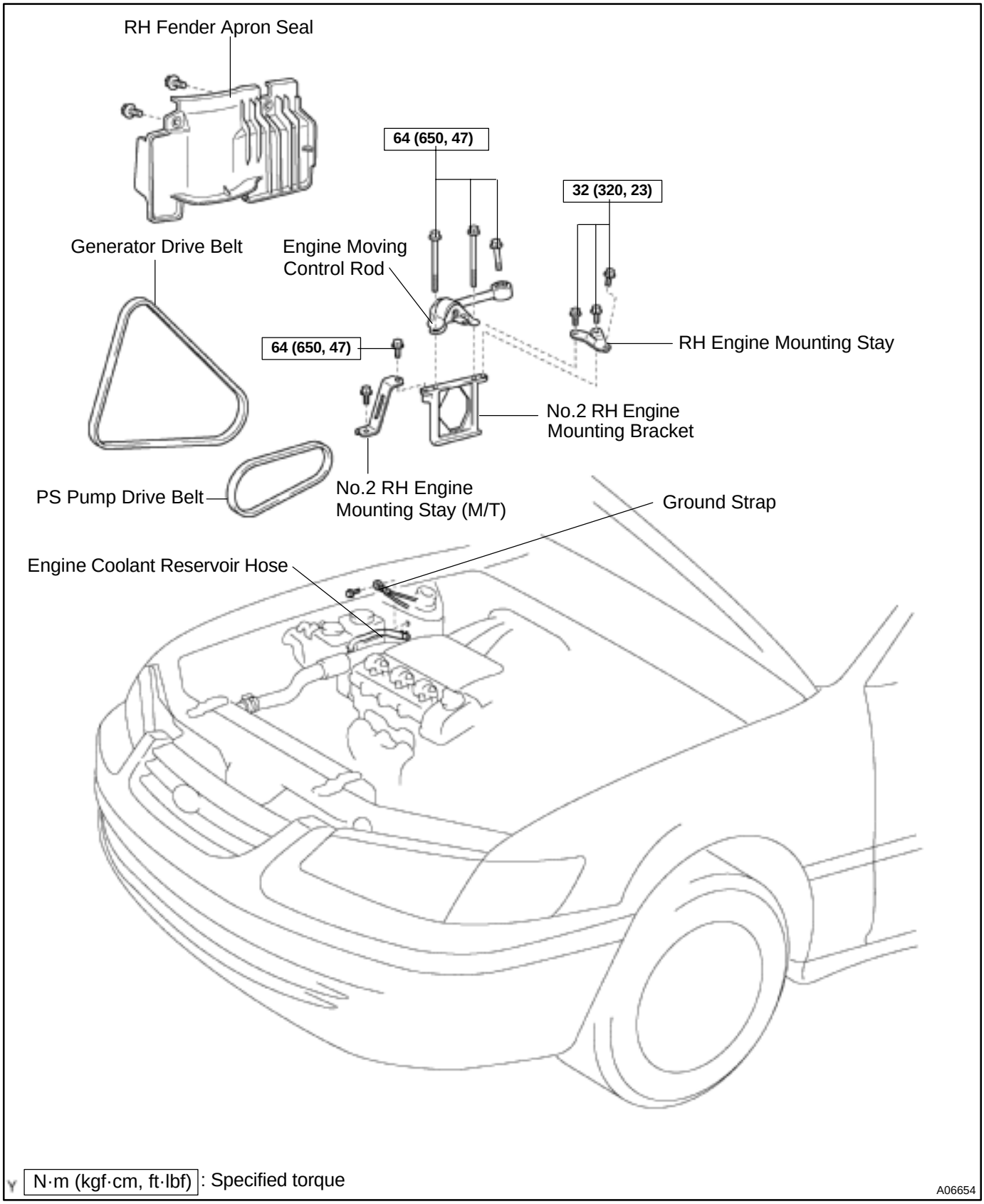

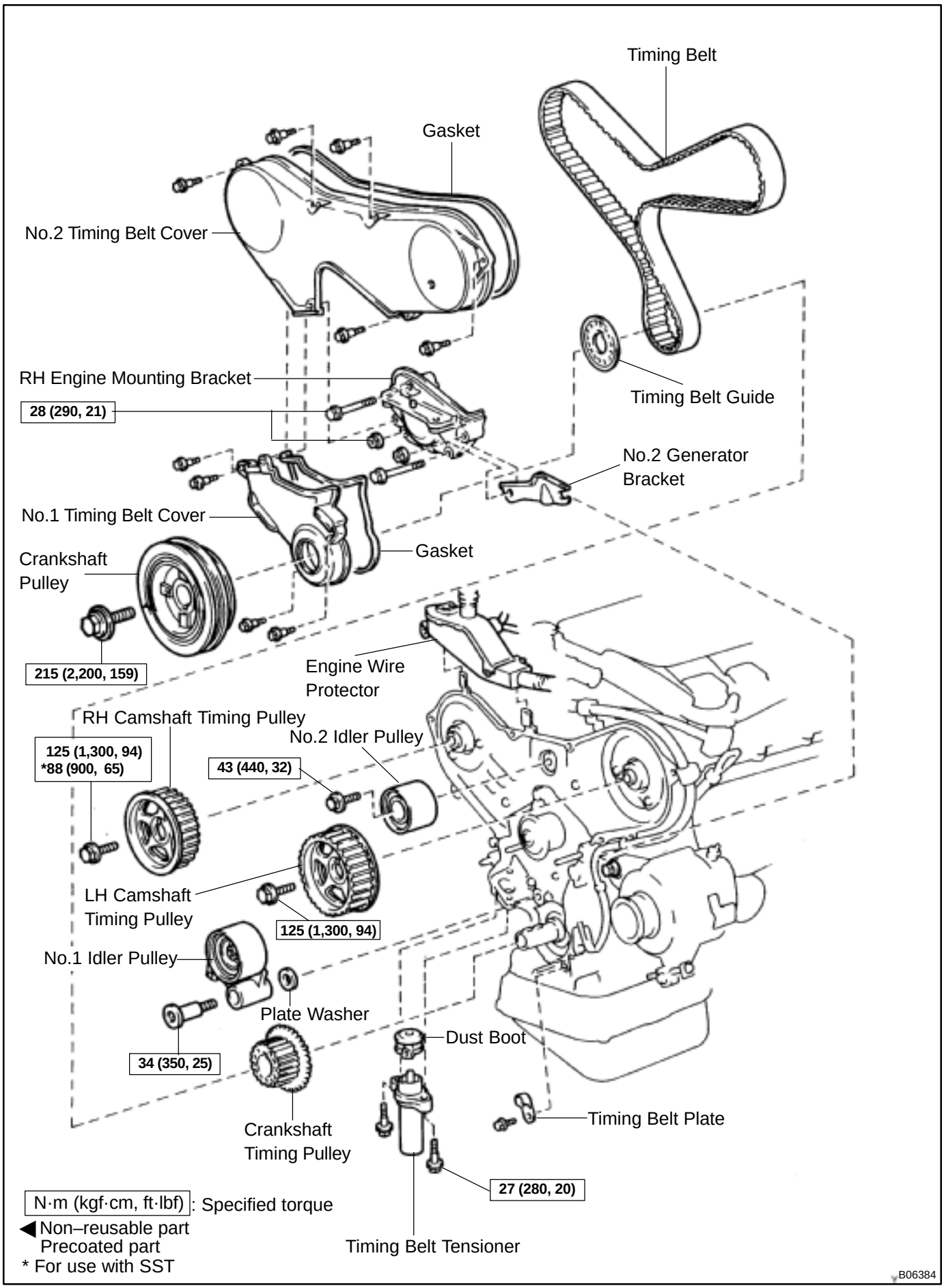
Timing Belt
Gasket
No.2 Timing Belt Cover
RH Engine Mounting Bracket
28 (290, 21)
Timing Belt Guide
No.2 Generator Bracket
No.1 Timing Belt Cover
Gasket
Crankshaft Pulley
215 (2,200, 159)
Engine Wire Protector
RH Camshaft Timing Pulley
125 (1,300, 94)
*88 (900, 65)
No.2 Idler Pulley
43 (440, 32)
LH Camshaft Timing Pulley
125 (1,300, 94)
No.1 Idler Pulley
Plate Washer
34 (350, 25)
Dust Boot
Timing Belt Plate
Crankshaft Timing Pulley
27 (280, 20)
N·m (kgf·cm, ft·lbf): Specified torque
◀ Non–reusable part
Precoated part
* For use with SST
Timing Belt Tensioner
B06384

EM04O–04

REMOVAL

1. REMOVE RH FRONT WHEEL

2. REMOVE RH FENDER APRON SEAL

3. REMOVE GENERATOR DRIVE BELT
(See page CH–6)

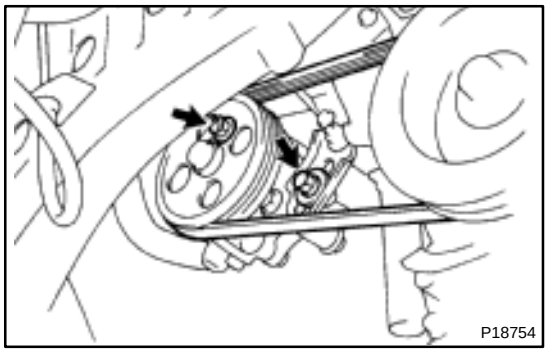

4. REMOVE PS PUMP DRIVE BELT

Loosen the 2 bolts, and remove the drive belt.

5. DISCONNECT ENGINE COOLANT RESERVOIR HOSE FROM WATER OUTLET

6. DISCONNECT GROUND STRAP CONNECTORS

7. REMOVE RH ENGINE MOUNTING STAY, NO.2 RH ENGINE MOUNTING STAY (M/T), ENGINE MOVING CONTROL ROD AND NO.2 RH ENGINE MOUNTING BRACKET (See page EM–71)

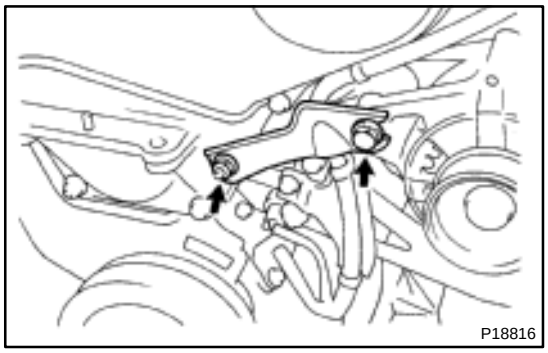

8. REMOVE NO.2 GENERATOR BRACKET

(a) Loosen the generator pivot bolt.

(b) Remove the nut and bracket.

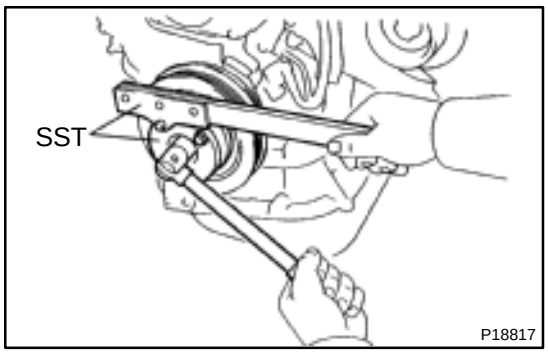

9. REMOVE CRANKSHAFT PULLEY

(a) Using SST, remove the pulley bolt.
SST 09213–54015 (91651–60855), 09330–00021

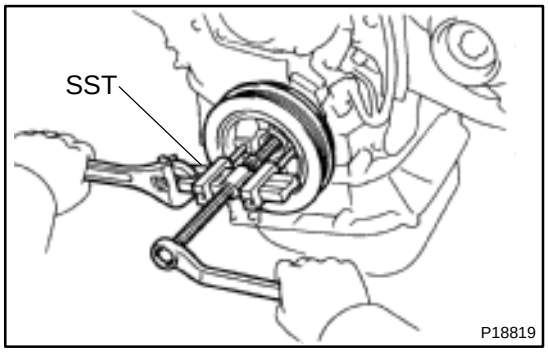

(b) Using SST, remove the pulley.
SST 09950–50012 (09951–05010, 09952–05010, 09953–05010, 09953–05020, 09954–05020)

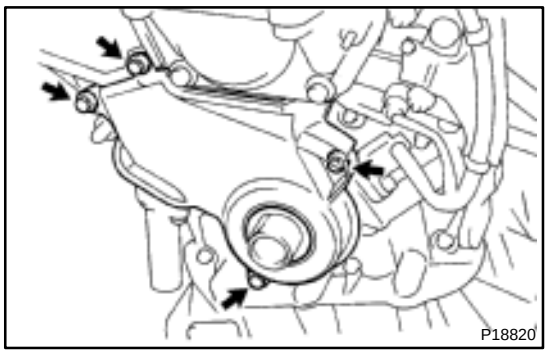

10. REMOVE NO.1 TIMING BELT COVER

Remove the 4 bolts and timing belt cover.

11. REMOVE TIMING BELT GUIDE

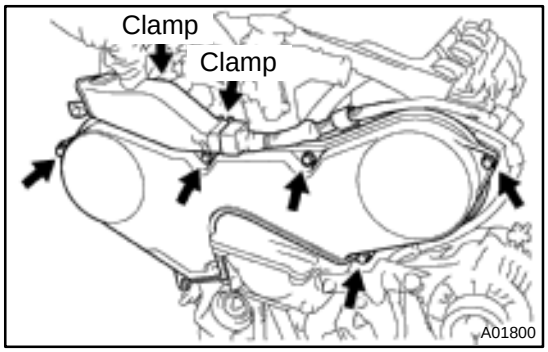

12. REMOVE NO.2 TIMING BELT COVER

(a) Disconnect the engine wire protector clamps from the No.3 timing belt cover.

(b) Remove the 5 bolts and timing belt cover.

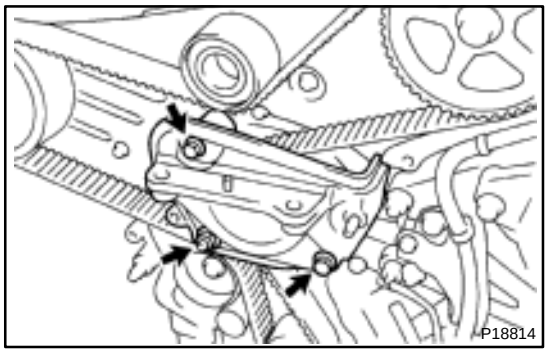

13. REMOVE RH ENGINE MOUNTING BRACKET

Remove the 2 bolts, nut and mounting bracket.

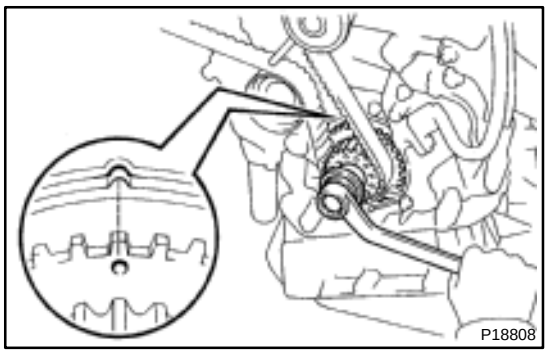

14. SET NO.1 CYLINDER TO TDC/COMPRESSION

(a) Temporarily install the crankshaft pulley bolt to the crankshaft.

(b) Turn the crankshaft, and align the timing marks of the crankshaft timing pulley and oil pump body.

NOTICE:

Always turn the crankshaft clockwise.

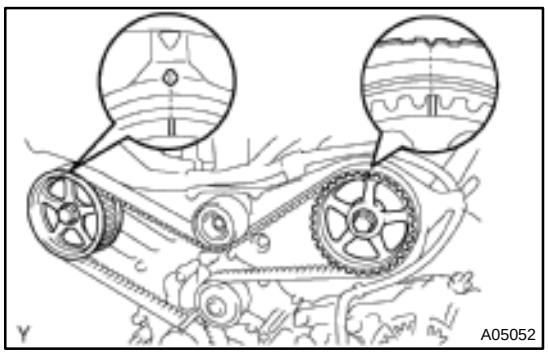

(c) Check that timing marks of the camshaft timing pulleys and No.3 timing belt cover are aligned.

If not, turn the crankshaft 1 revolution (360˚).

(d) Remove the crankshaft pulley bolt.

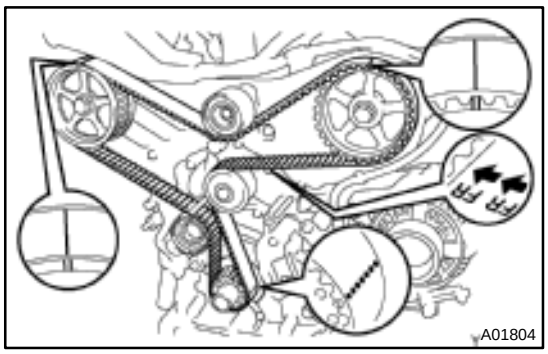

15. IF REUSING TIMING BELT, CHECK INSTALLATION MARKS ON TIMING BELT

Check that there are 3 installation marks and front mark on the timing belt.

If the installation and front marks have disappeared, before removing the timing belt, place 3 new installation marks on the timing belt to match the timing marks of the timing pulleys, and place a new front mark on the timing belt.

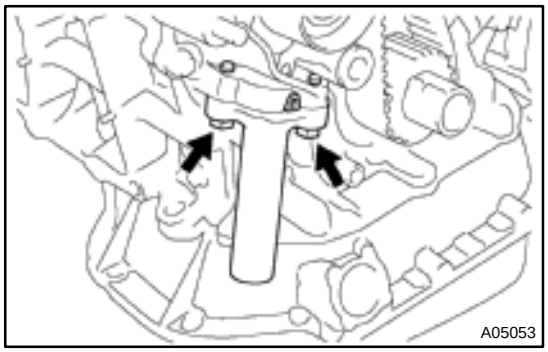

16. REMOVE TIMING BELT TENSIONER

Alternately loosen the 2 bolts, and remove them, the tensioner and dust boot.

17. REMOVE TIMING BELT

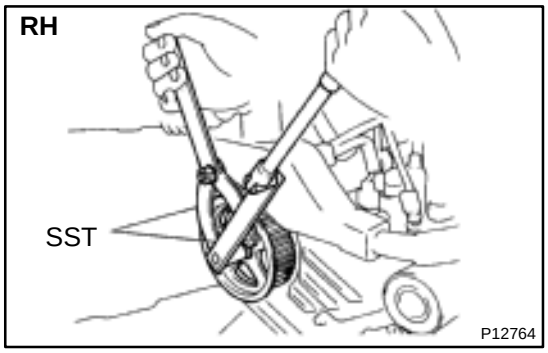

18. REMOVE CAMSHAFT TIMING PULLEYS

(a) Using SST, remove the bolt and RH timing pulley.
SST 09249–63010, 09960–10010 (09962–01000, 09963–01000)

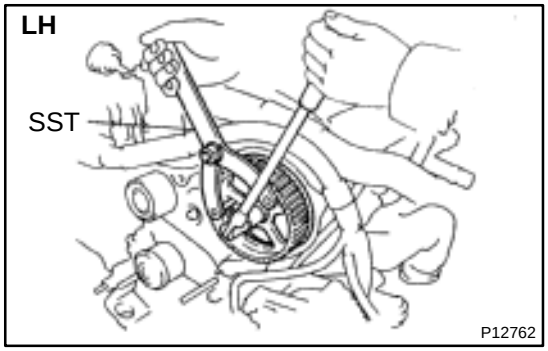

(b) Using SST, remove the LH timing pulley.
SST 09960–10010 (09962–01000, 09963–01000)

HINT:

Arrange the camshaft timing pulleys (RH and LH sides).

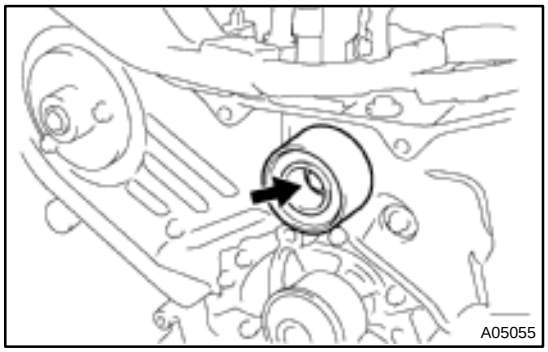

19. REMOVE NO.2 IDLER PULLEY

Remove the bolt and idler pulley.

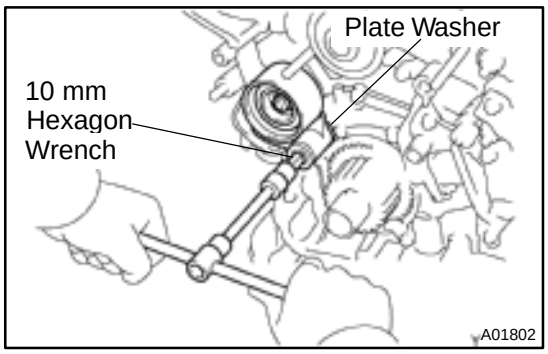

20. REMOVE NO.1 IDLER PULLEY

Using a 10 mm hexagon wrench, remove the bolt, idler pulley and plate washer.

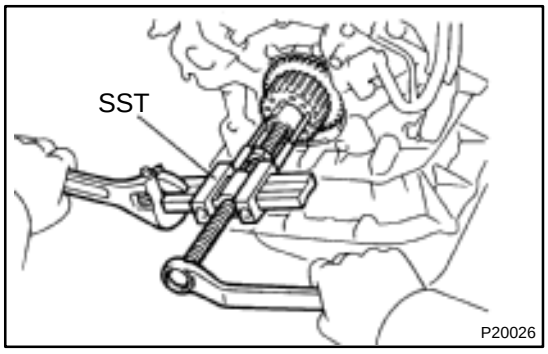

21. REMOVE CRANKSHAFT TIMING PULLEY

(a) Remove the bolt and timing belt plate.

(b) Using SST, remove the crankshaft timing pulley.

SST 09950–50012 (09951–05010, 09952–05010, 09953–05010, 09953–05020, 09954–05010)

NOTICE:

Do not scratch the sensor part of the crankshaft timing pulley.

EM04P–03

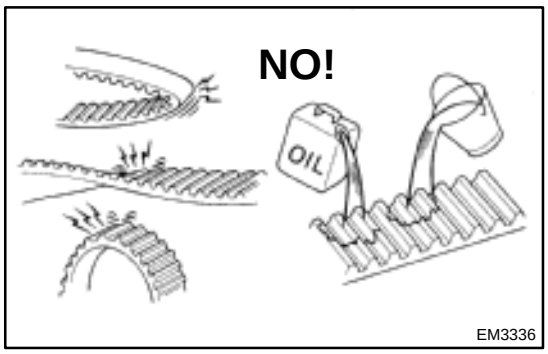

INSPECTION

1. INSPECT TIMING BELT

NOTICE:

Do not bend, twist or turn the timing belt inside out.

Do not allow the timing belt to come into contact with oil, water or steam.

Do not utilize timing belt tension when installing or removing the mount bolt of the camshaft timing pulley.

If there are any defects, as shown in the illustrations, check these points:

(a) Premature parting

Check for proper installation.

Check the timing cover gasket for damage and proper installation.

(b) If the belt teeth are cracked or damaged, check to see if either camshaft is locked.

(c) If there is noticeable wear or cracks on the belt face, check to see if there are nicks on the side of the idler pulley lock and water pump.

(d) If there is wear or damage on only one side of the belt, check the belt guide and the alignment of each pulley.

(e) If there is noticeable wear on the belt teeth, check timing cover for damage and check gasket has been installed correctly and for foreign material on the pulley teeth.

If necessary, replace the timing belt.

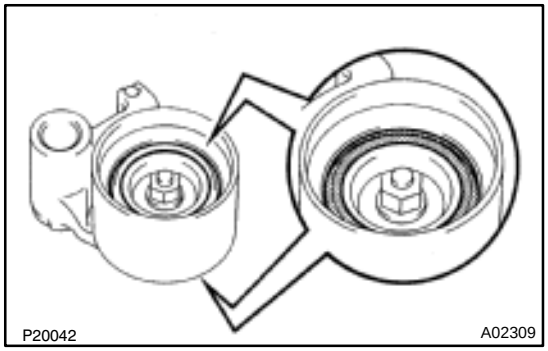

2. INSPECT IDLER PULLEYS

(a) Visually check the seal portion of the idler pulley for oil leakage.

If leakage is found, replace the idler pulley.

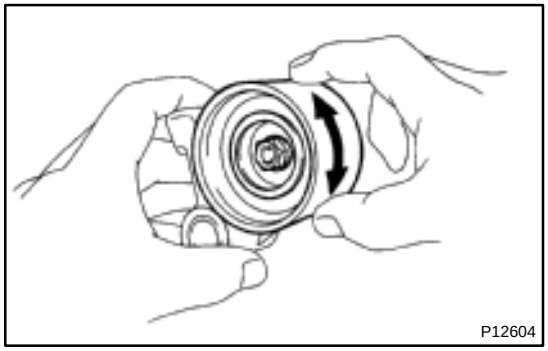

(b) Check that the idler pulley turns smoothly.

If necessary, replace the idler pulley.

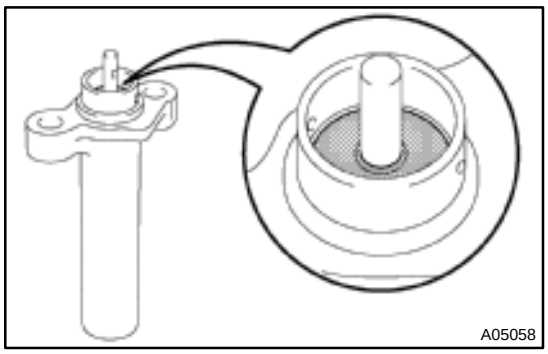

3. INSPECT TIMING BELT TENSIONER

(a) Visually check the seal portion of the tensioner for oil leakage.

HINT:

If there is only the faintest trace of oil on the seal on the push rod side, the tensioner is all right.

If leakage is found, replace the tensioner.

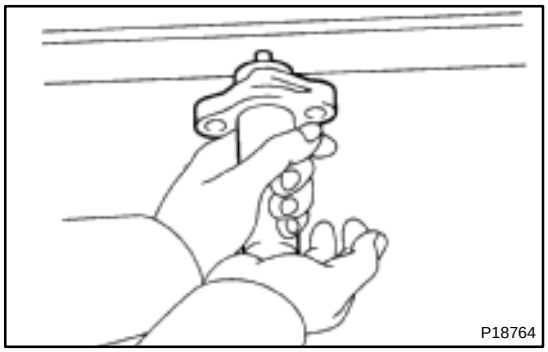

(b) Hold the tensioner with both hands and push the push rod strongly as shown to check that it doesn't move.

If the push rod moves, replace the tensioner.

NOTICE:

Never hold the tensioner push rod facing downward.

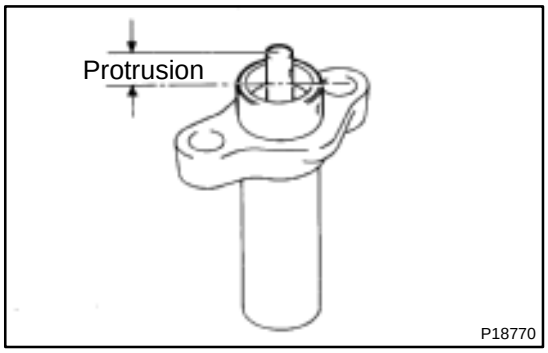

(c) Measure the protrusion of the push rod from the housing end.

Protrusion: 10.0 – 10.8 mm (0.394 – 0.425 in.)

If the protrusion is not as specified, replace the tensioner.

EM0YO–01

INSTALLATION

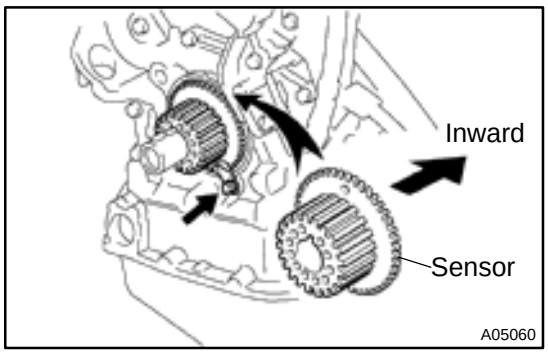

1. INSTALL CRANKSHAFT TIMING PULLEY

(a) Align the pulley set key with the key groove of the timing pulley, and slide on the timing pulley.

(b) Install the timing pulley, facing the sensor side inward.

NOTICE:

Do not scratch the sensor part of the crankshaft timing pulley.

(c) Install the timing belt plate with the bolt.
Torque: 8 N·m (80 kgf·cm, 69 in.·lbf)

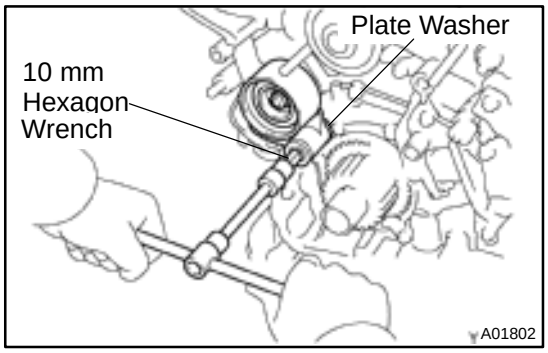

2. INSTALL NO.1 IDLER PULLEY
Adhesive: Part No. 08833–00080, THREE BOND 1344, LOCTITE 242 or equivalent

(a) Using a 10 mm hexagon wrench, install the plate washer and idler pulley with the pivot bolt.
Torque: 34 N·m (350 kgf·cm, 25 ft·lbf)

(b) Check that the pulley bracket moves smoothly.

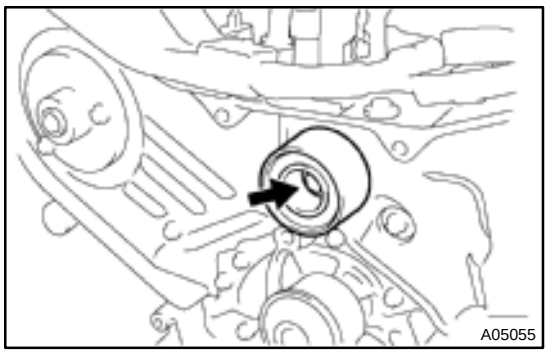

3. INSTALL NO.2 IDLER PULLEY

(a) Install the idler pulley with the bolt.
Torque: 43 N·m (440 kgf·cm, 32 ft·lbf)

(b) Check that the idler pulley moves smoothly.

4. INSTALL RH CAMSHAFT TIMING PULLEY

(a) Face the flange side of the timing pulley outward.

(b) Align the knock pin on the camshaft with the knock pin groove of the timing pulley, and slide on the timing pulley.

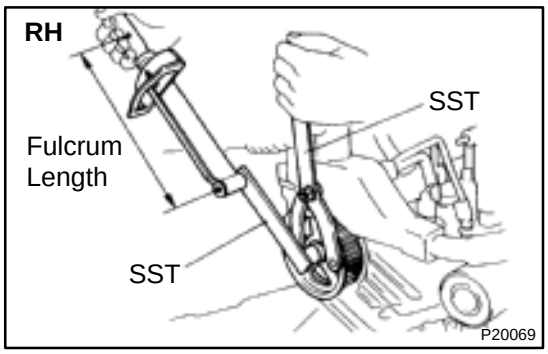

(c) Using SST, install the pulley bolt.
SST 09249–63010, 09960–10010 (09962–01000, 09963–01000)
Torque: 88 N·m (900 kgf·cm, 65 ft·lbf)

HINT:
Use a torque wrench with a fulcrum length of 340 mm (13.39 in.).

5. INSTALL LH CAMSHAFT TIMING PULLEY

(a) Face the flange side of the timing pulley inward.

(b) Align the knock pin on the camshaft with the knock pin groove of the timing pulley, and slide on the timing pulley.



(c) Using SST, install the pulley bolt.
SST 09960–10010 (09962–01000, 09963–01000)
Torque: 125 N·m (1,300 kgf·cm, 94 ft·lbf)

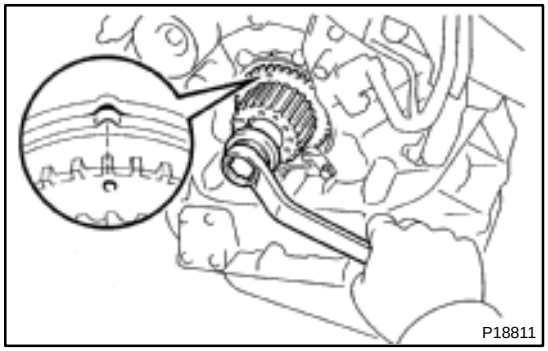

6. SET NO.1 CYLINDER TO TDC/COMPRESSION

(a) Crankshaft Timing Pulley Position:
Temporarily install the crankshaft pulley bolt to the crankshaft.

(b) Crankshaft Timing Pulley Position:
Turn the crankshaft, and align the timing marks of the crankshaft timing pulley and oil pump body.

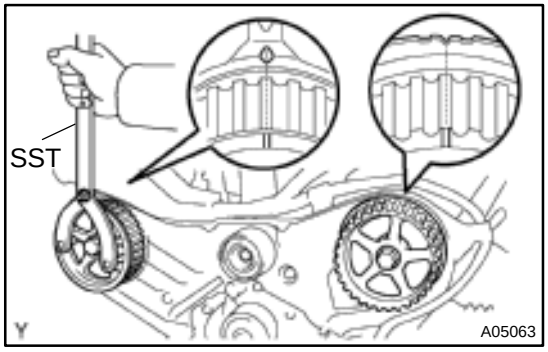

(c) Camshaft Timing Pulley Positions:
Using SST, turn the camshaft pulley, align the timing marks of the timing pulley and No.3 timing belt cover.
SST 09960–10010 (09962–01000, 09963–01000)

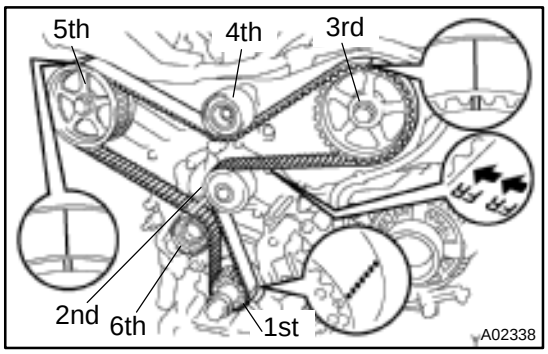

7. INSTALL TIMING BELT

NOTICE:

The engine should be cold.

(a) Remove any oil or water on the pulleys, and keep them clean.

NOTICE:

Only wipe the pulleys; do not use any cleansing agent.

(b) Face the front mark on the timing belt forward.

(c) Align the installation mark on the timing belt with the timing mark of the crankshaft timing pulley.

(d) Align the installation marks on the timing belt with the timing marks of the camshaft timing pulleys.

(e) Install the timing belt in this order:
1st: Crankshaft timing pulley
2nd: Water pump pulley
3rd: LH camshaft timing pulley
4th: No.2 idler pulley
5th: RH camshaft timing pulley
6th: No.1 idler pulley

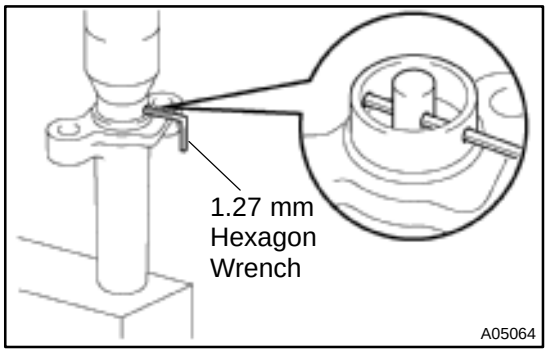

8. SET TIMING BELT TENSIONER

(a) Using a press, slowly press in the push rod using 981 – 9,807 N (100 – 1,000 kgf, 200 – 2,205 lbf) of pressure.

(b) Align the holes of the push rod and housing, pass a 1.27 mm hexagon wrench through the holes to keep the setting position of the push rod.

(c) Release the press.

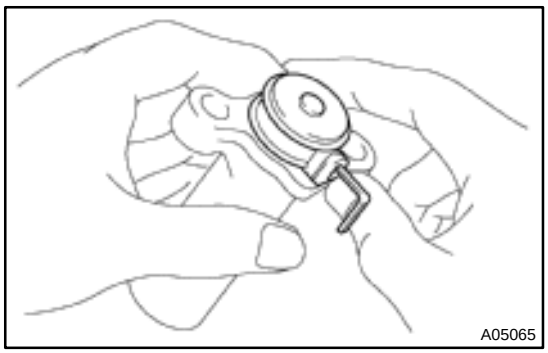

(d) Install the dust boot to the tensioner.

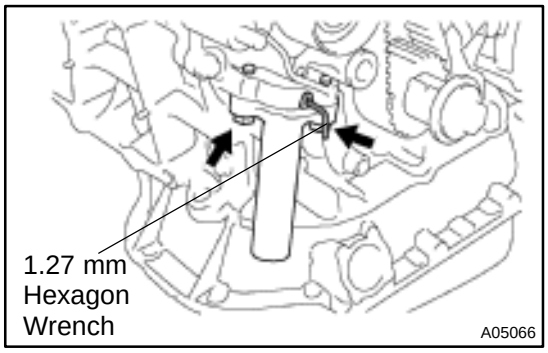

9. INSTALL TIMING BELT TENSIONER

(a) Temporarily install the tensioner with the 2 bolts.

(b) Alternately tighten the 2 bolts.
Torque: 27 N·m (280 kgf·cm, 20 ft·lbf)

(c) Remove the 1.27 mm hexagon wrench from the tensioner.

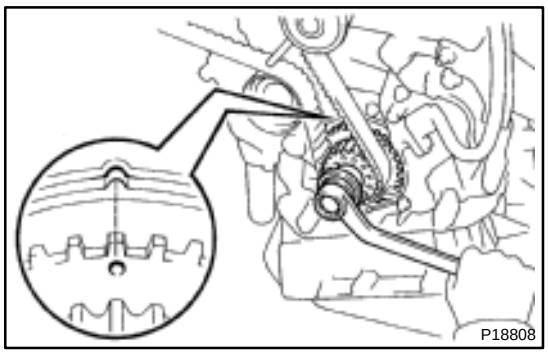

10. CHECK VALVE TIMING

(a) Slowly turn the crankshaft 2 revolutions, and align the timing marks of the crankshaft timing pulley and oil pump body.

NOTICE:

Always turn the crankshaft clockwise.

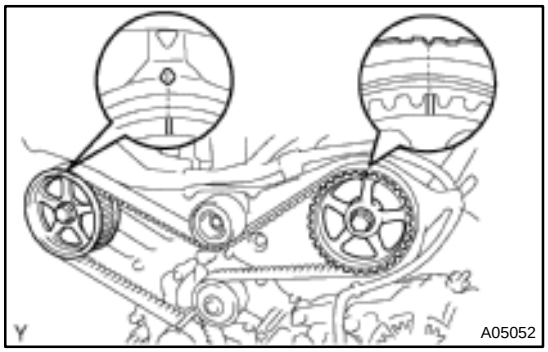

(b) Check that the timing marks of the RH and LH timing pulleys with the timing marks of the No.3 timing belt cover as shown in the illustration.

If the marks do not align, remove the timing belt and reinstall it.

(c) Remove the crankshaft pulley bolt.

11. INSTALL RH ENGINE MOUNTING BRACKET

Torque: 28 N·m (290 kgf·cm, 21 ft·lbf)

12. INSTALL NO.2 TIMING BELT COVER

(a) Check that the timing belt cover gasket has no cracks or peeling, etc.

If the gasket has cracks or peeling, etc., replace it using these steps:

Using a screwdriver and gasket scraper, remove all the old gasket material.

Thoroughly clean all components to remove all the loose material.

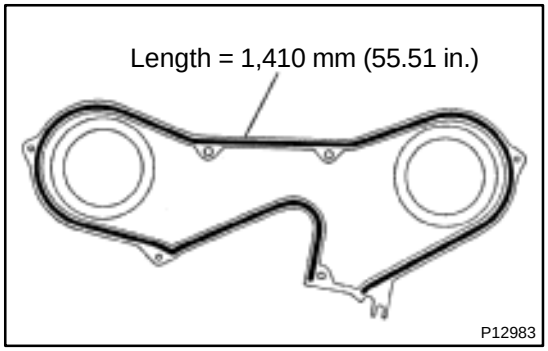

Remove the backing paper from a new gasket and install the gasket evenly to the part of the timing belt cover shaded black in the illustration.

After installing the gasket, press down on it so that the adhesive firmly sticks to the timing belt cover.

(b) Install the timing belt cover with the 5 bolts.

Torque: 8.5 N·m (85 kgf·cm, 74 in.·lbf)

(c) Install the engine wire protector clamps to the No.3 timing belt cover.

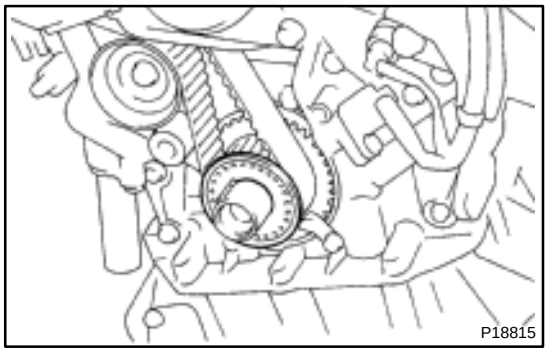

13. INSTALL TIMING BELT GUIDE

Install the timing belt guide, facing the cup side outward.

14. INSTALL NO.1 TIMING BELT COVER

(a) Check that the timing belt cover gaskets have cracks or peeling, etc.

If the gasket has cracks or peeling, etc., replace it using these steps:

Using a screwdriver and gasket scraper, remove all the old gasket material.

Thoroughly clean all components to remove all the loose material.

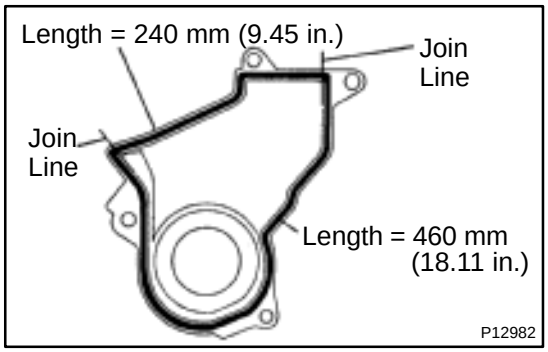

Remove the backing paper from a new gasket and install the gasket evenly to the part of the timing belt cover shaded black in the illustration.

NOTICE:

When joining 2 gaskets, do not leave a gap between them. Cut off any excess gasket.

After installing the gasket, press down on it so that the adhesive firmly sticks to the timing belt cover.

(b) Install the timing belt cover with the 4 bolts.

Torque: 8.5 N·m (85 kgf·cm, 74 in.·lbf)

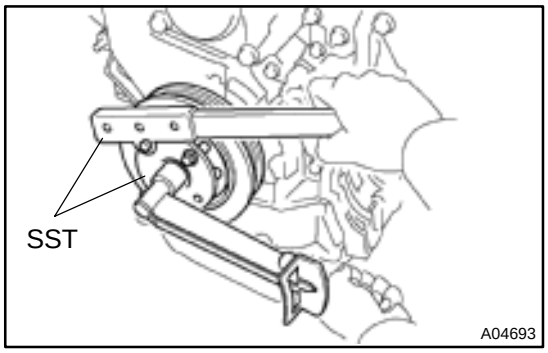

15. INSTALL CRANKSHAFT PULLEY

(a) Align the pulley set key with the key groove of the pulley, and slide on the pulley.

(b) Using SST, install the pulley bolt.

SST 09213–54015 (91651–60855), 09330–00021

Torque: 215 N·m (2,200 kgf·cm, 159 ft·lbf)

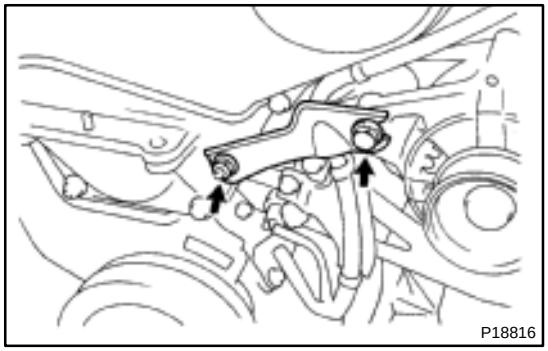

16. INSTALL NO.2 GENERATOR BRACKET

Install the generator bracket with the pivot bolt and nut. Do not tighten the bolt yet.

Torque: (Nut): 28 N·m (290 kgf·cm, 21 ft·lbf)

17. INSTALL NO.2 RH ENGINE MOUNTING BRACKET, ENGINE MOVING CONTROL ROD, NO.2 RH ENGINE MOUNTING STAY (M/T) AND RH ENGINE MOUNTING STAY (See page EM–76)

18. CONNECT GROUND STRAP CONNECTORS

19. CONNECT ENGINE COOLANT RESERVOIR HOSE TO WATER OUTLET

20. INSTALL PS PUMP DRIVE BELT

21. INSTALL GENERATOR DRIVE BELT (See page CH–16)

22. INSTALL RH FENDER APRON SEAL

23. INSTALL RH FRONT WHEEL

24. VEHICLE ROAD TEST

Check for abnormal noise, shock, slippage, correct shift points and smoothly operation.

CYLINDER HEAD

COMPONENTS

EM04R–05

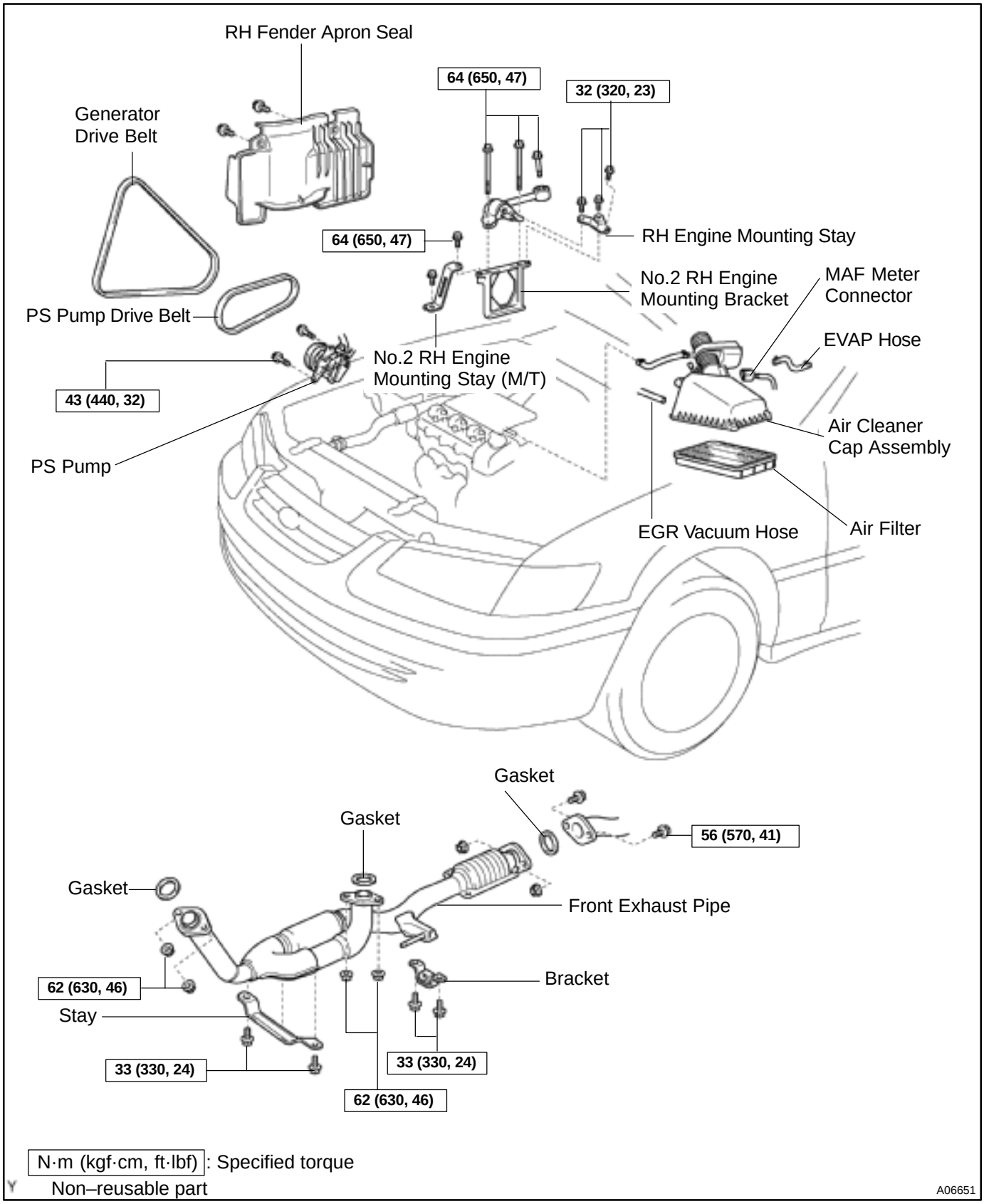

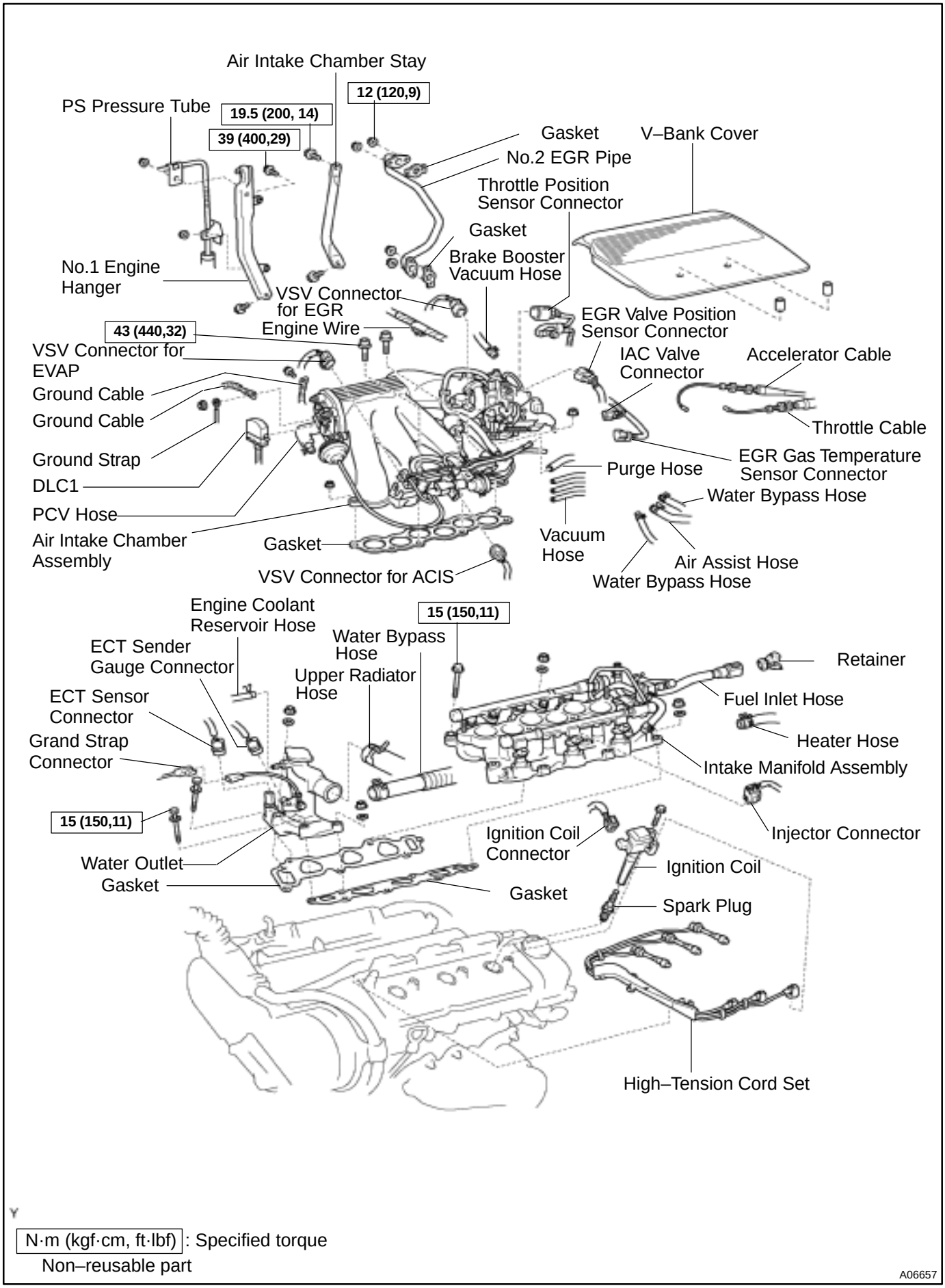

Y

N·m (kgf·cm, ft·lbf) : Specified torque

Non–reusable part

A06657

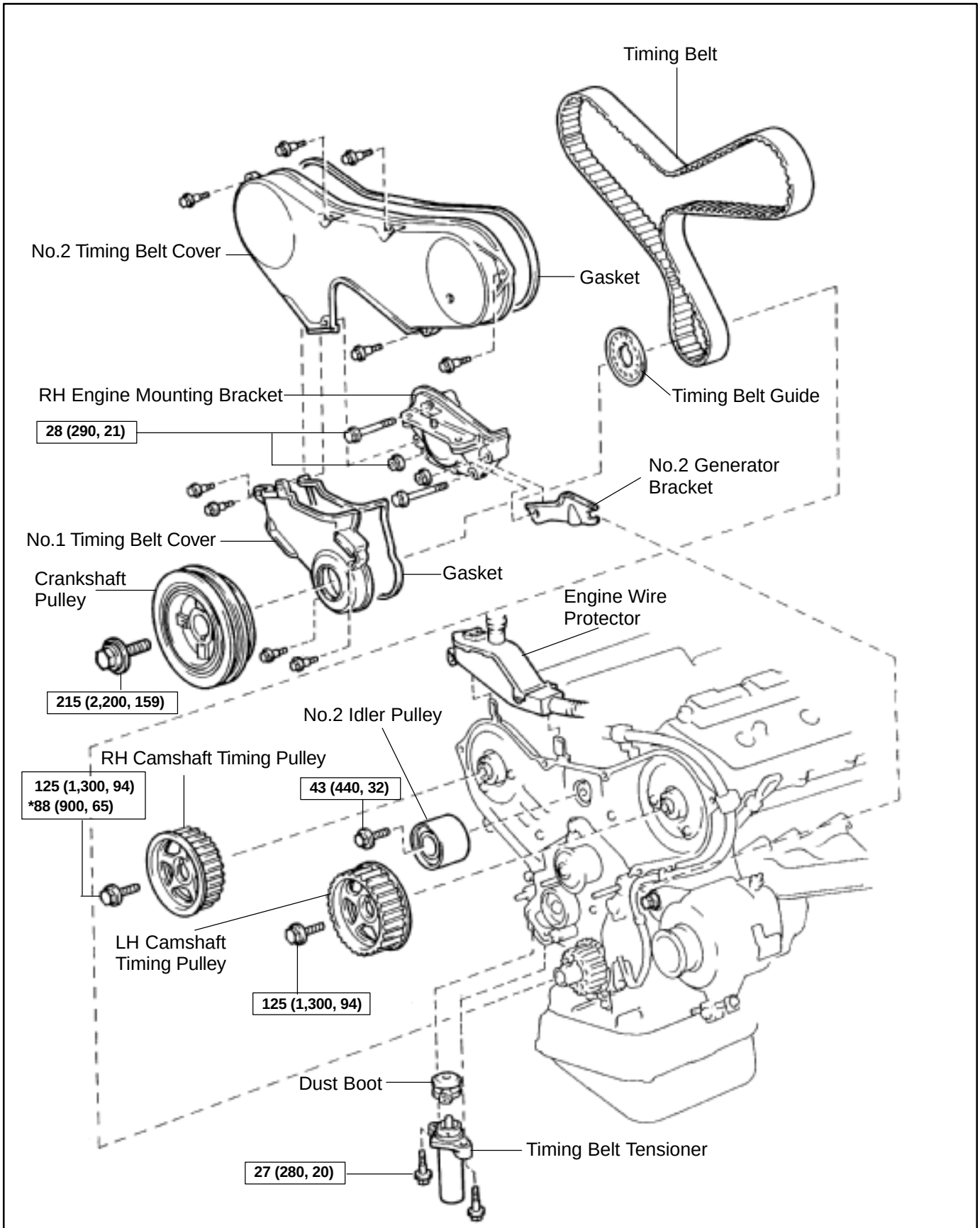

N·m (kgf·cm, ft·lbf) : Specified torque
Non–reusable part
* For use with SST

A05070

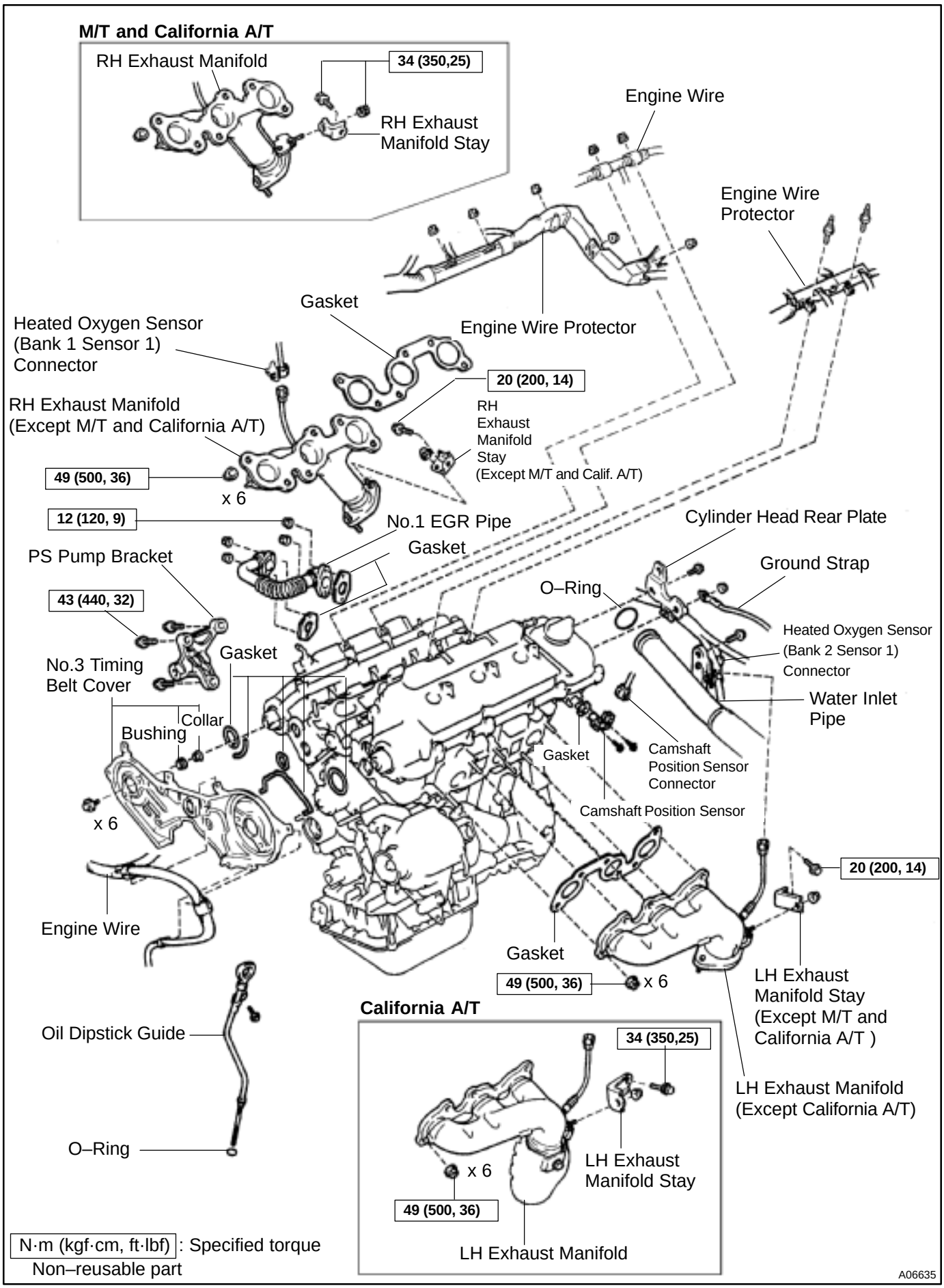
M/T and California A/T
RH Exhaust Manifold
34 (350,25)
RH Exhaust Manifold Stay
Engine Wire
Engine Wire Protector
Gasket
Heated Oxygen Sensor (Bank 1 Sensor 1) Connector
20 (200, 14)
RH Exhaust Manifold (Except M/T and California A/T)
RH Exhaust Manifold Stay (Except M/T and Calif. A/T)
49 (500, 36)
x 6
12 (120, 9)
No.1 EGR Pipe
Gasket
Cylinder Head Rear Plate
PS Pump Bracket
Ground Strap
O–Ring
43 (440, 32)
Heated Oxygen Sensor (Bank 2 Sensor 1) Connector
Gasket
No.3 Timing Belt Cover
Water Inlet Pipe
Collar
Bushing
Gasket
Camshaft Position Sensor Connector
Camshaft Position Sensor
x 6
20 (200, 14)
Engine Wire
Gasket
49 (500, 36)
x 6
LH Exhaust Manifold Stay (Except M/T and California A/T)
Oil Dipstick Guide
California A/T
34 (350,25)
LH Exhaust Manifold (Except California A/T)
O–Ring
x 6
LH Exhaust Manifold Stay
49 (500, 36)
LH Exhaust Manifold
N·m (kgf·cm, ft·lbf) : Specified torque
Non–reusable part
A06635

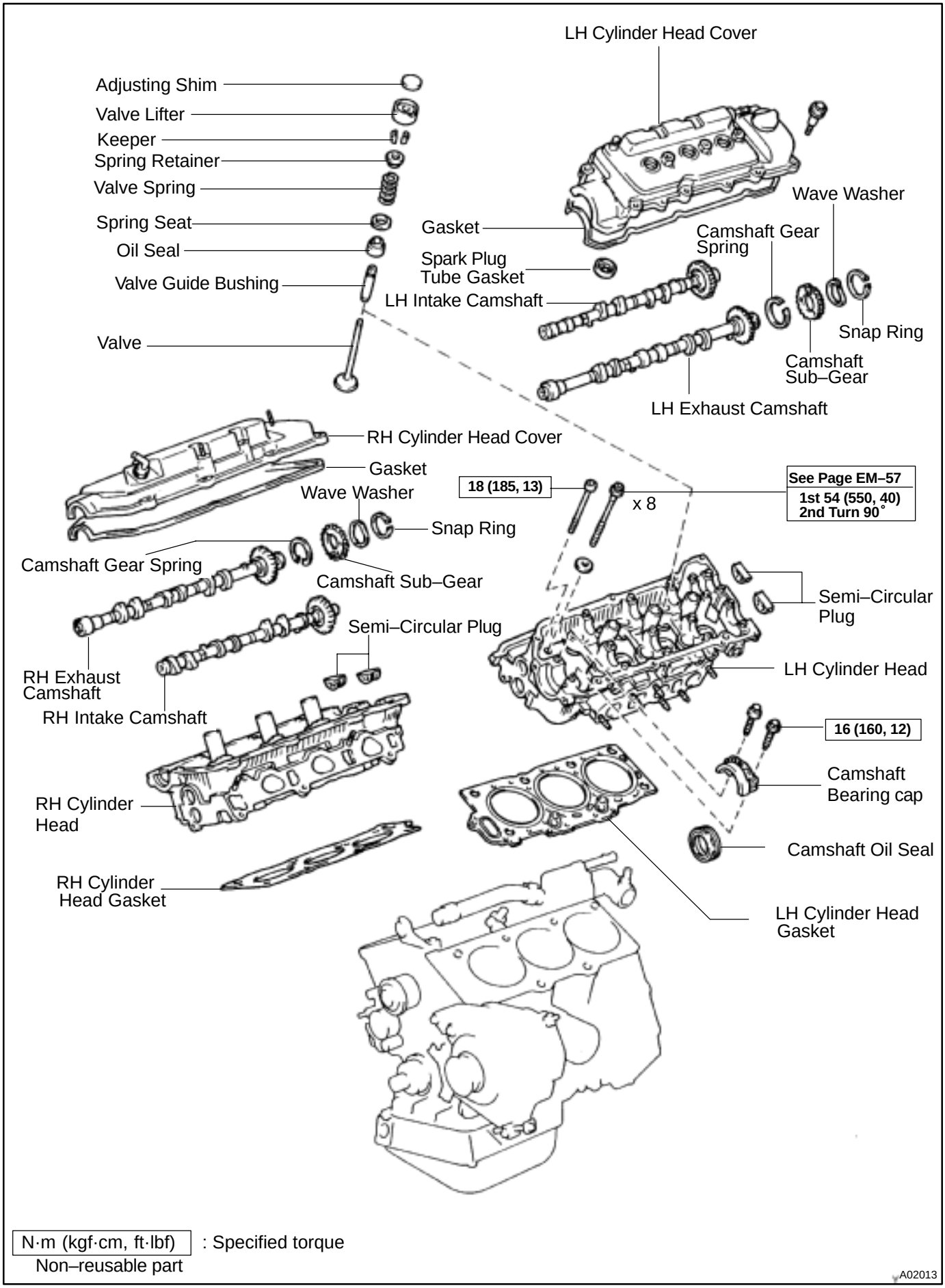
LH Cylinder Head Cover
Adjusting Shim
Valve Lifter
Keeper
Spring Retainer
Valve Spring
Spring Seat
Oil Seal
Valve Guide Bushing
Valve
Gasket
Spark Plug Tube Gasket
LH Intake Camshaft
Wave Washer
Camshaft Gear Spring
Snap Ring
Camshaft Sub–Gear
LH Exhaust Camshaft
RH Cylinder Head Cover
Gasket
Wave Washer
Snap Ring
Camshaft Gear Spring
Camshaft Sub–Gear
RH Exhaust Camshaft
Semi–Circular Plug
RH Intake Camshaft
RH Cylinder Head
RH Cylinder Head Gasket
18 (185, 13)
x 8
See Page EM–57
1st 54 (550, 40)
2nd Turn 90°
Semi–Circular Plug
LH Cylinder Head
16 (160, 12)
Camshaft Bearing cap
Camshaft Oil Seal
LH Cylinder Head Gasket
N·m (kgf·cm, ft·lbf) : Specified torque
Non–reusable part
A02013

EM04S–05

REMOVAL

1. DRAIN ENGINE COOLANT
2. REMOVE AIR CLEANER CAP ASSEMBLY AND AIR FILTER
3. REMOVE ENGINE RH FENDER APRON SEAL
4. REMOVE FRONT EXHAUST PIPE (See page EM–71)
5. REMOVE RH ENGINE MOUNTING STAY

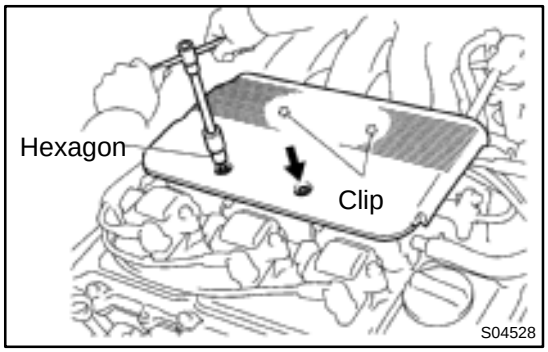

6. REMOVE V–BANK COVER
(a) Using a 5 mm hexagon wrench, remove the 2 nuts.
(b) Disconnect the 2 clips, and remove the cover.
7. REMOVE HIGH–TENSION CORD SET (See page IG–7)
8. REMOVE AIR INTAKE CHAMBER ASSEMBLY
(a) Disconnect the accelerator cable.
(b) Disconnect the A/T throttle cable.
(c) Disconnect the throttle position sensor connector.
(d) Disconnect the IAC valve connector.
(e) Disconnect the EGR gas temperature sensor connector.
(f) Disconnect the EGR valve position sensor connector.
(g) Disconnect the VSV connector for the ACIS.
(h) Disconnect the VSV connector for the EVAP.
(i) Disconnect the VSV connector for the EGR.
(j) Disconnect the DLC1 from the bracket on the intake air control valve.
(k) Remove the 2 nuts, and disconnect the PS pressure tube from the No.1 engine hanger.

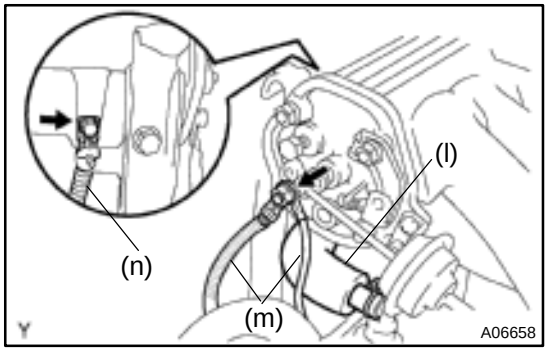

(l) Disconnect the PCV hose from the PCV valve on the RH cylinder head.
(m) Disconnect the ground strap and cable from the intake air control valve for the ACIS.
(n) Disconnect the ground cable from the air intake chamber.

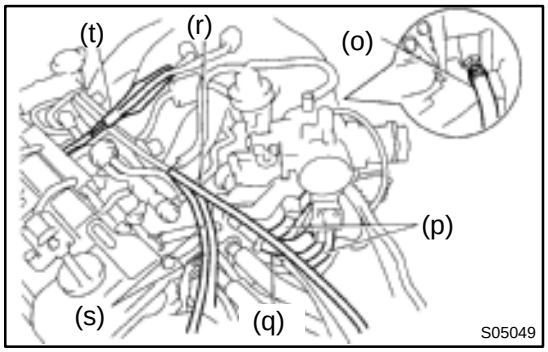

(o) Disconnect the brake booster vacuum hose from the air intake chamber.
(p) Disconnect the 2 water bypass hoses from the throttle body.
(q) Disconnect the air assist hose from the throttle body.
(r) Disconnect the purge hose from the pipe on emission control valve set.
(s) Disconnect the 2 vacuum hoses from the vacuum tank for the ACIS.

(t) Disconnect the engine wire clamp from the emission control valve set.

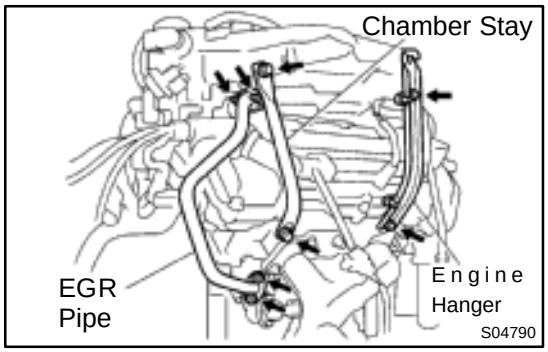

(u) Remove the 2 bolts and No.1 engine hanger.
(v) Remove the 2 bolts and air intake chamber stay.
(w) Remove the 4 nuts, No.2 EGR pipe and 2 gaskets.

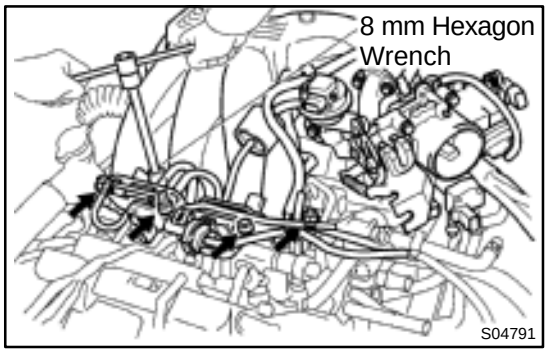

(x) Using an 8 mm hexagon wrench, remove the 2 bolts, 2 nuts, the air intake chamber assembly and gasket.

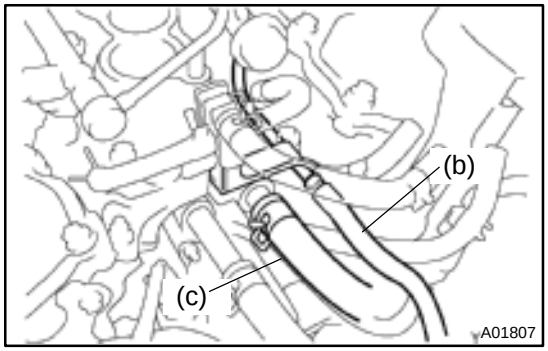

9. REMOVE INTAKE MANIFOLD ASSEMBLY

(a) Disconnect the 6 injector connectors.
(b) Disconnect the fuel inlet hose from the fuel filter.

CAUTION:

Perform connecting operations of the fuel tube connector (quick type) after observing the precautions.
(See page SF–1)

(c) Disconnect the heater hose from the intake manifold.

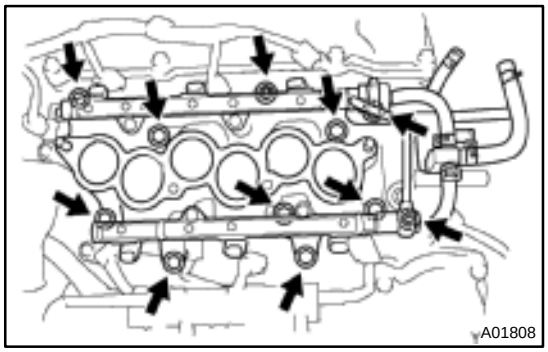

(d) Remove the 9 bolts, 2 nuts, 2 plate washers, the intake manifold, delivery pipes and injectors assembly.

NOTICE:

Be careful not to drop the injectors when removing the delivery pipes.
Pay attention to put any hung load on the injector to and from the side direction.

10. REMOVE WATER OUTLET

(a) Disconnect the ECT sender gauge connector.
(b) Disconnect the ECT sensor connector.
(c) Disconnect the ground strap (connector).
(d) Disconnect the radiator hose.
(e) Disconnect the engine coolant reservoir hose.

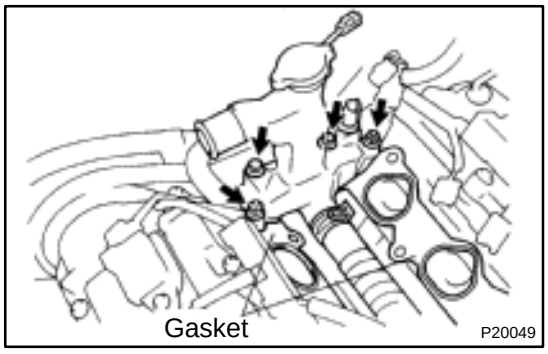

(f) Remove the 2 bolts, 2 nuts and 2 plate washers.
(g) Disconnect the water bypass hose, and remove the water outlet.
(h) Remove the 2 gaskets.

11. REMOVE GENERATOR DRIVE BELT (See page CH–6)
12. REMOVE PS PUMP (See page SR–21)
13. REMOVE IGNITION COILS
14. REMOVE SPARK PLUGS
15. REMOVE TIMING BELT (See page EM–15)
16. REMOVE CAMSHAFT TIMING PULLEYS (See page EM–15)
17. REMOVE NO.2 IDLER PULLEY (See page EM–15)

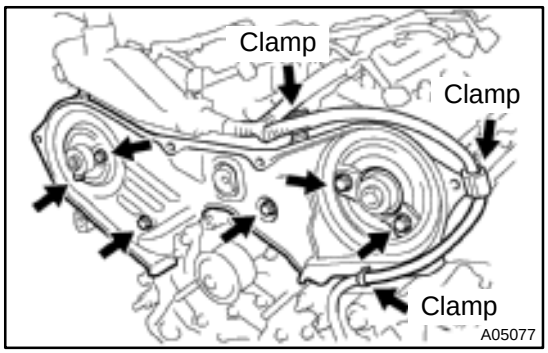

18. REMOVE NO.3 TIMING BELT COVER

(a) Disconnect the 3 engine wire clamps from the timing belt cover.
(b) Remove the 6 bolts and timing belt cover.

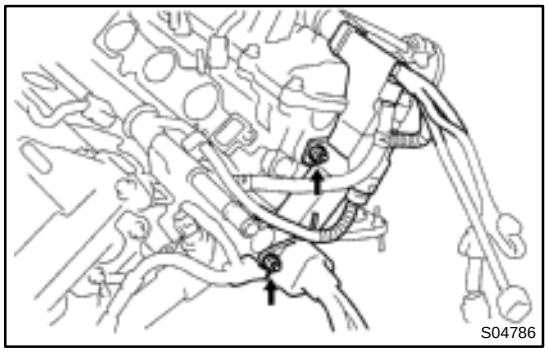

19. DISCONNECT ENGINE WIRE PROTECTOR FROM REAR SIDE

Remove the 2 nuts, and disconnect the engine wire protector from the RH cylinder head and water inlet.

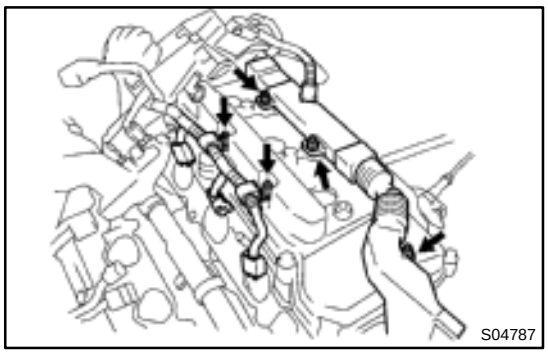

20. DISCONNECT ENGINE WIRE AND PROTECTOR FROM RH SIDE

Remove the 5 nuts, and disconnect the engine wire and protector from the RH cylinder head cover.

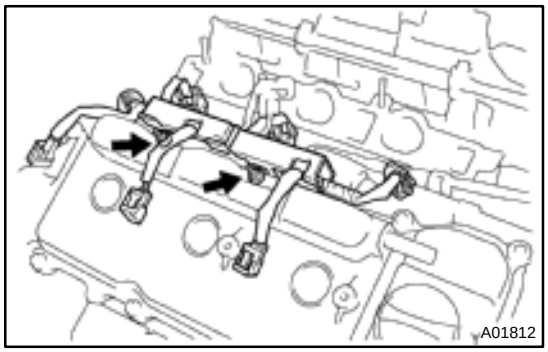

21. DISCONNECT ENGINE WIRE PROTECTOR FROM LH SIDE

Remove the 2 bolts, and disconnect the engine wire protector from the LH cylinder head cover.

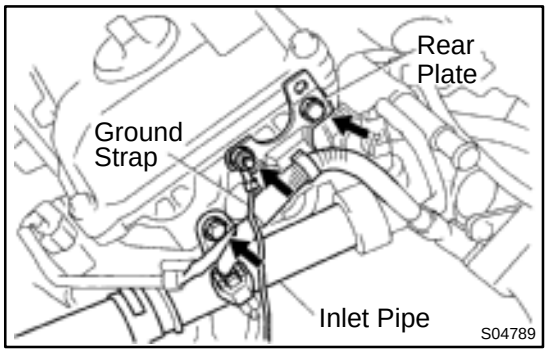

22. DISCONNECT CYLINDER HEAD REAR PLATE FROM LH CYLINDER HEAD

(a) Remove the nut, and disconnect the ground strap.
(b) Remove the bolt, and disconnect the rear plate.

23. DISCONNECT WATER INLET PIPE FROM LH CYLINDER HEAD AND WATER INLET

(a) Remove the bolt, and disconnect the inlet pipe from the water inlet.
(b) Remove the O–ring from the inlet pipe.

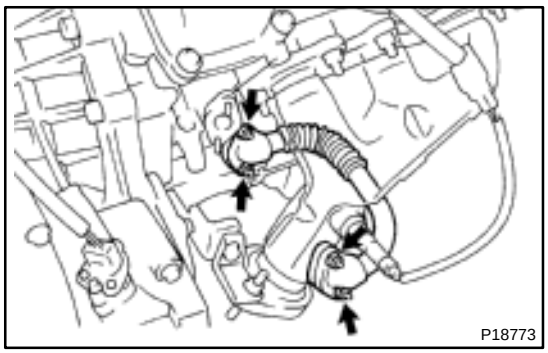

24. REMOVE NO.1 EGR PIPE

Remove the 4 nuts, EGR pipe and 2 gaskets.

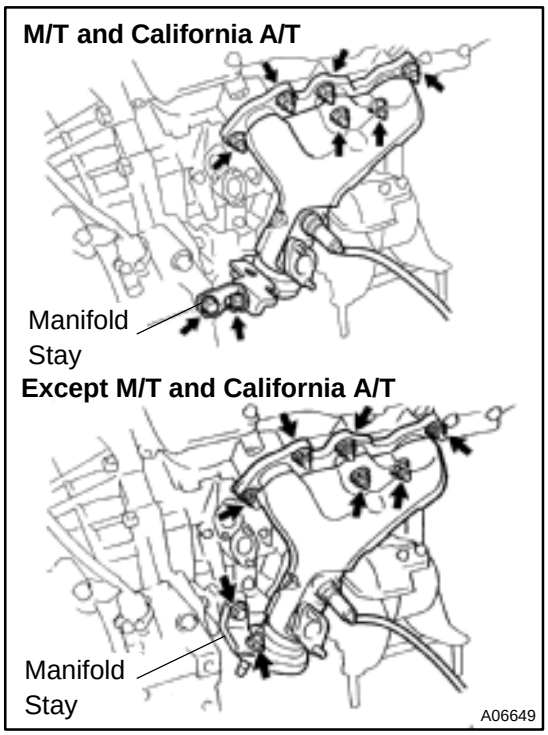

25. REMOVE RH EXHAUST MANIFOLD

(a) California A/T:
Disconnect the A/F sensor connector.

(b) Except California A/T:
Disconnect the heated oxygen sensor (bank 1 sensor 1) connector.

(c) Remove the bolt, nut and exhaust manifold stay.

(d) Remove the 6 nuts, exhaust manifold and gasket.

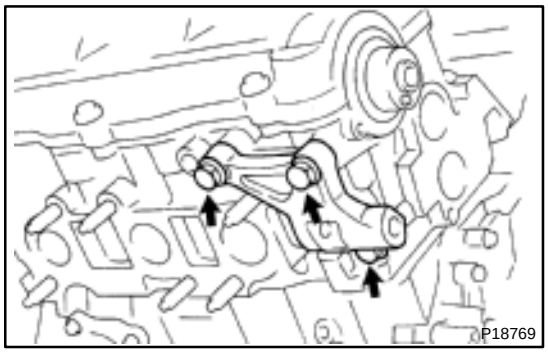

26. REMOVE PS PUMP BRACKET

Remove the 3 bolts and pump bracket.

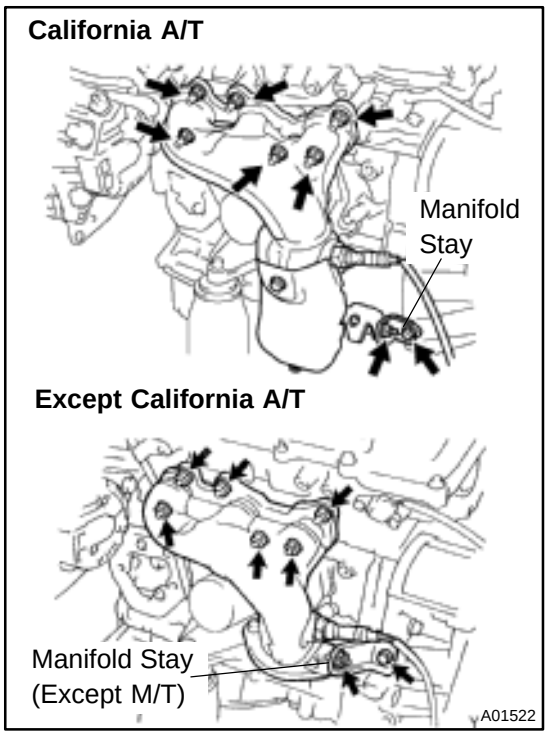

27. REMOVE LH EXHAUST MANIFOLD

(a) California A/T:
Disconnect the A/F sensor connector.

(b) Except California A/T:
Disconnect the heated oxygen sensor (bank 2 sensor 1) connector.

(c) Except M/T:
Remove the bolt, nut and exhaust manifold stay.

(d) Remove the 6 nuts, exhaust manifold and gasket.

28. REMOVE CAMSHAFT POSITION SENSOR

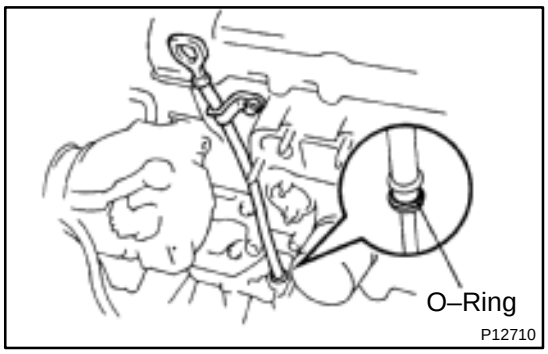

29. REMOVE OIL DIPSTICK AND GUIDE

(a) Remove the bolt holding the dipstick guide to the LH cylinder head.

(b) Pull out the dipstick guide together with the dipstick from the No.1 oil pan.

(c) Remove the O–ring from the dipstick guide.

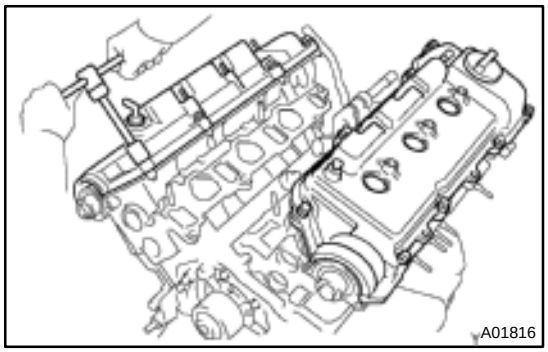

30. REMOVE CYLINDER HEAD COVERS

Remove the 8 bolts, cylinder head cover and gasket. Remove the 2 cylinder head covers.

31. REMOVE CAMSHAFTS OF RH CYLINDER HEAD

NOTICE:

Since the thrust clearance of the camshaft is small, the camshaft must be held level while it is being removed. If the camshaft is not kept level, the portion of the cylinder head receiving the shaft thrust may crack or be damaged, causing the camshaft to seize or break. To avoid this, the following steps should be carried out.

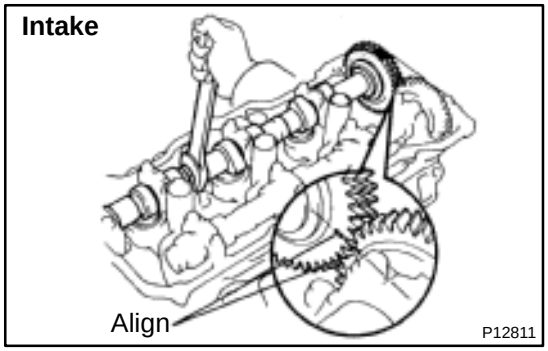

(a) Remove the intake camshaft.

(1) Align the timing marks (2 dot marks) of the camshaft drive and driven gears by turning the camshaft with a wrench.

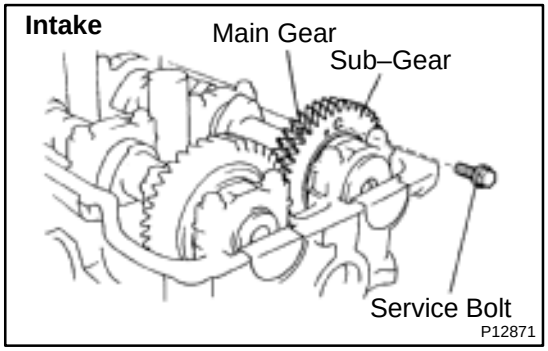

(2) Secure the exhaust camshaft sub–gear to the main gear with a service bolt.

Recommended service bolt:

Thread diameter	6 mm
Thread pitch	1.0 mm
Bolt length	16 – 20 mm (0.63 – 0.79 in.)

HINT:
When removing the camshaft, mark certain that the torsional spring force of the sub–gear has been eliminated by the above operation.

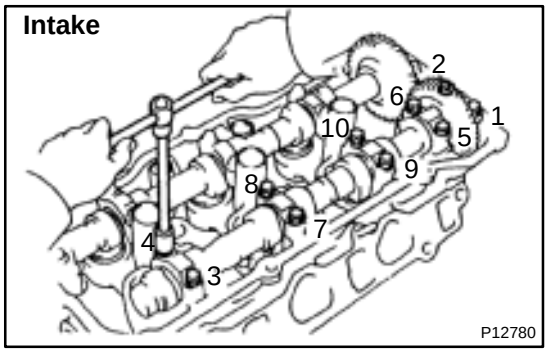

(3) Uniformly loosen and remove the 10 bearing cap bolts, in several passes, in the sequence shown.
(4) Remove the 5 bearing caps and intake camshaft.

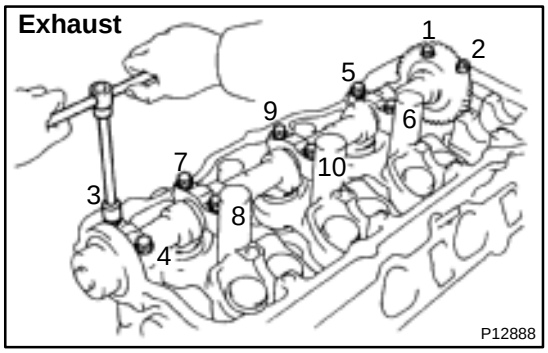

(b) Remove the exhaust camshaft.
(1) Uniformly loosen and remove the 10 bearing cap bolts, in several passes, in the sequence shown.
(2) Remove the 5 bearing caps, oil seal and exhaust camshaft.

32. REMOVE CAMSHAFTS OF LH CYLINDER HEAD

NOTICE:

Since the thrust clearance of the camshaft is small, the camshaft must be held level while it is being removed. If the camshaft is not kept level, the portion of the cylinder head receiving the shaft thrust may crack or be damaged, causing the camshaft to seize or break. To avoid this, the following steps should be carried out.

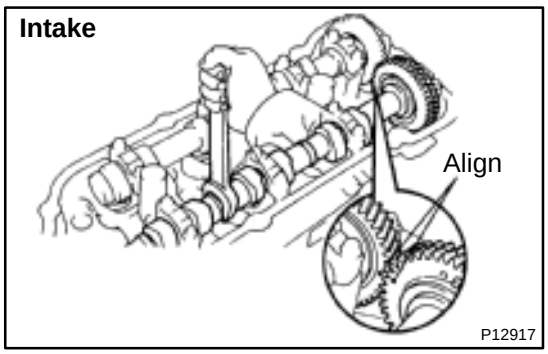

(a) Remove the intake camshaft.
(1) Align the timing marks (1 dot mark) of the camshaft drive and driven gears by turning the camshaft with a wrench.

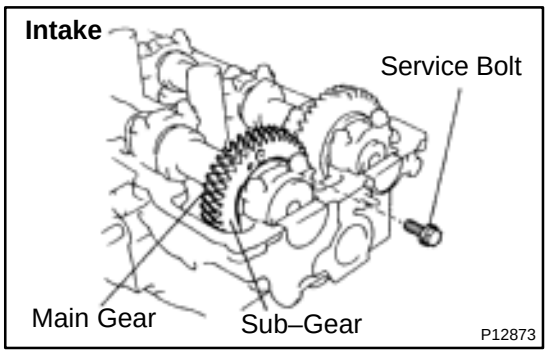

(2) Secure the exhaust camshaft sub–gear to the main gear with a service bolt.

Recommended service bolt:

Thread diameter	6 mm
Thread pitch	1.0 mm
Bolt length	16 – 20 mm (0.63 – 0.79 in.)

HINT:

When removing the camshaft, make sure that the torsional spring force of the sub–gear has been eliminated by the above operation.

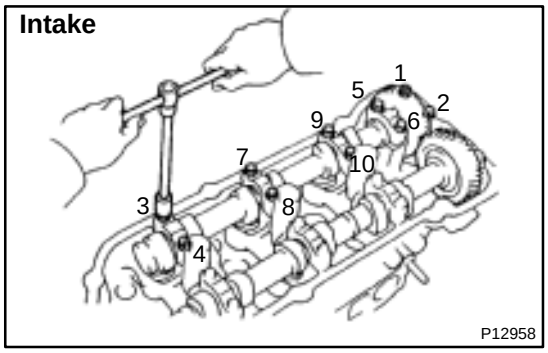

(b) Uniformly loosen and remove the 10 bearing cap bolts, in several passes, in the sequence shown.

(c) Remove the 5 bearing caps and intake camshaft.

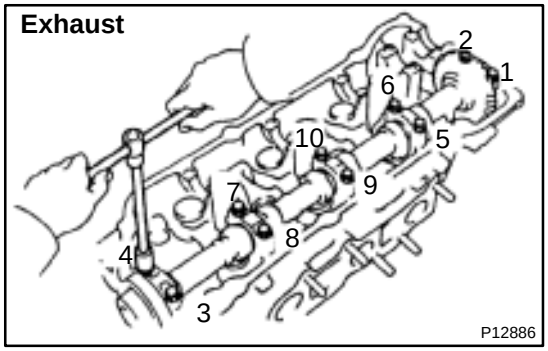

(d) Remove the exhaust camshaft.

(1) Uniformly loosen and remove the 10 bearing cap bolts, in several passes, in the sequence shown.

(2) Remove the 5 bearing caps, oil seal and exhaust camshaft.

HINT:

Arrange the camshafts in the correct order.

Arrange the bearing caps in the correct order.

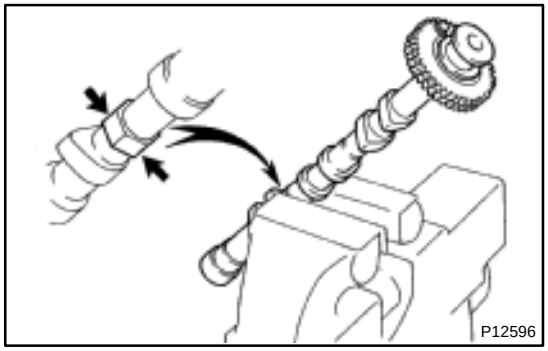

33. DISASSEMBLE EXHAUST CAMSHAFTS

(a) Mount the hexagonal wrench head portion of the camshaft in a vise.

NOTICE:

Be careful not to damage the camshaft.

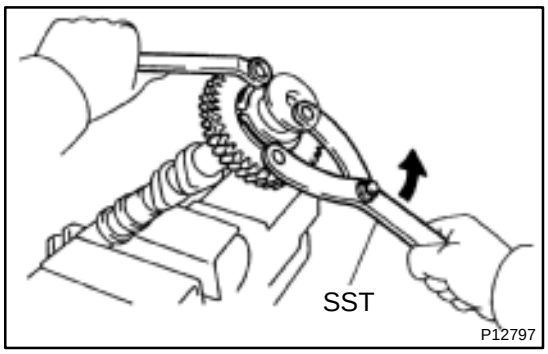

(b) Using SST, turn the sub–gear counterclockwise, and remove the service bolt.
SST 09960–10010 (09962–01000, 09963–00500)

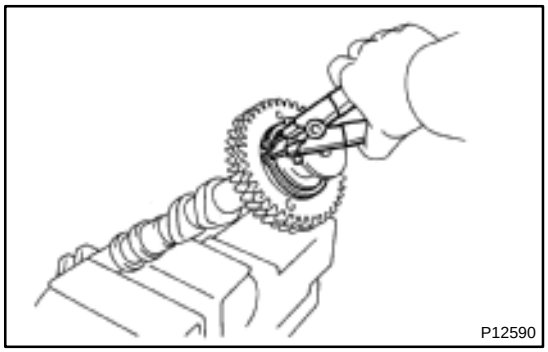

(c) Using snap ring pliers, remove the snap ring.
(d) Remove the wave washer, camshaft sub–gear, and camshaft gear spring.

HINT:
Arrange the camshaft sub–gears and gear springs (RH and LH side).

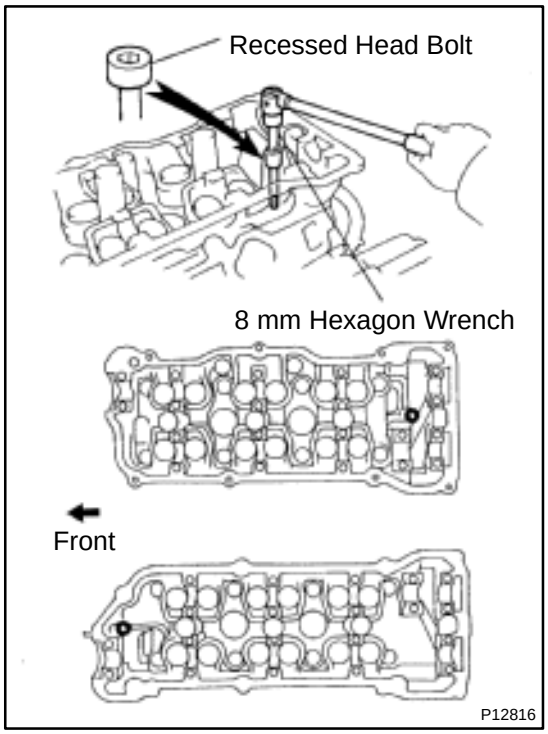

34. REMOVE CYLINDER HEADS

(a) Using an 8 mm hexagon wrench, remove the cylinder head (recessed head) bolt on each cylinder head, then repeat for the other side, as shown.

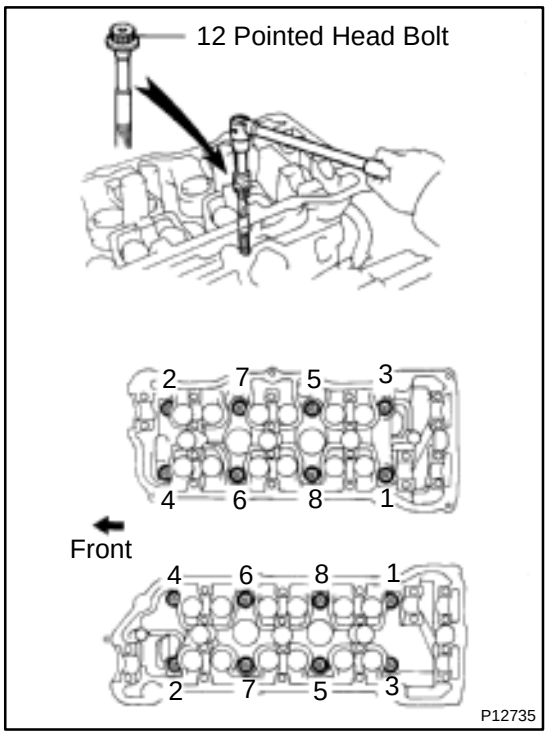

(b) Uniformly loosen and remove the 8 cylinder head (12 pointed head) bolts on each cylinder head, in several passes, in the sequence shown, then repeat for the other side, as shown. Remove the 16 cylinder head bolts and plate washers.

NOTICE:

Head warpage or cracking could result from removing bolts in an incorrect order.

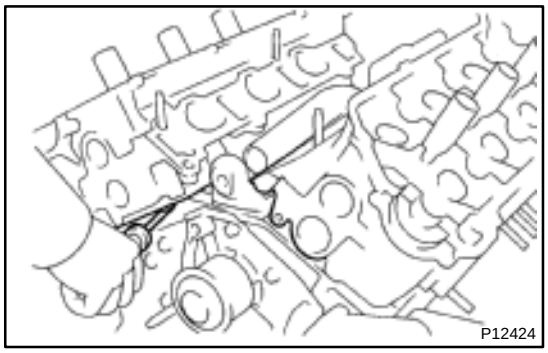

(c) Lift the cylinder head from the dowels on the cylinder block and place the 2 cylinder heads on wooden blocks on a bench.

HINT:

If the cylinder head is difficult to lift off, pry between the cylinder head and cylinder block with a screwdriver.

NOTICE:

Be careful not to damage the contact surfaces of the cylinder head and cylinder block.

EM04T–03

DISASSEMBLY

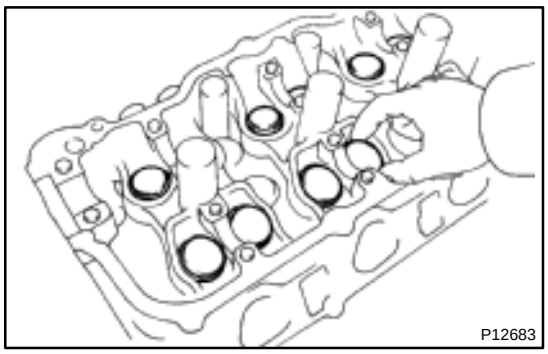

1. REMOVE VALVE LIFTERS AND SHIMS

HINT:

Arrange the valve lifters and shims in the correct order.

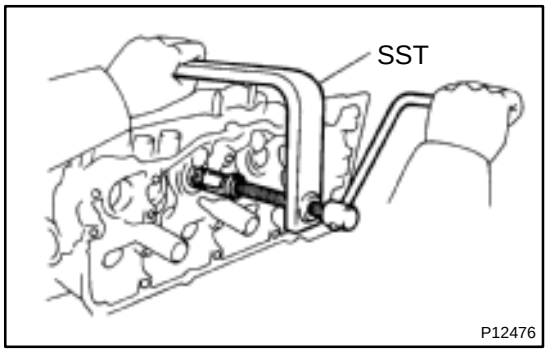

2. REMOVE VALVES

(a) Using SST, compress the valve spring and remove the 2 keepers.

SST 09202–70020 (09202–00010)

(b) Remove the spring retainer, valve spring and valve.

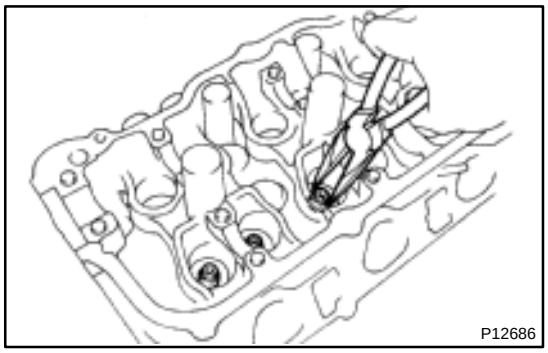

(c) Using needle–nose pliers, remove the oil seal.

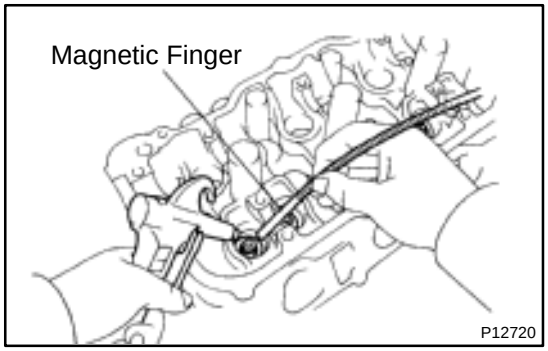

(d) Using compressed air and a magnetic finger, remove the spring seat by blowing air.

HINT:

Arrange the valves, valve springs, spring seats and spring retainers in the correct order.

EM0YP–01

INSPECTION

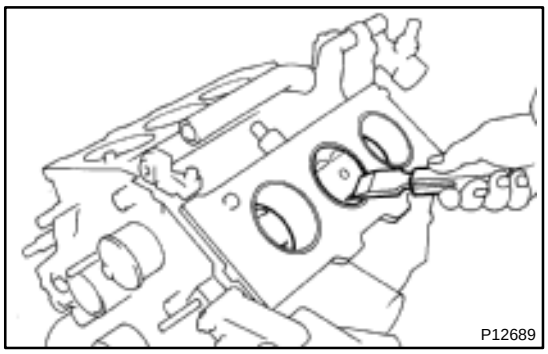

1. CLEAN TOP SURFACES OF PISTONS AND CYLINDER BLOCK

(a) Turn the crankshaft, and bring each piston to top dead center (TDC). Using a gasket scraper, remove all the carbon from the piston top surface.

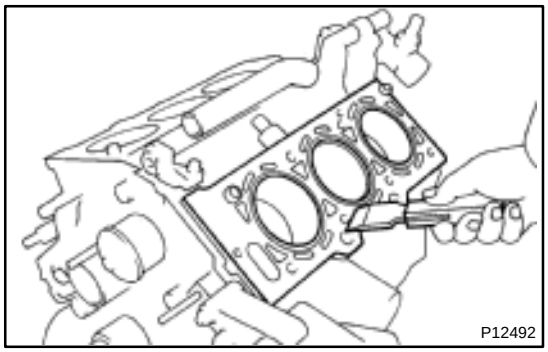

(b) Using a gasket scraper, remove all the gasket material from the cylinder block surface.

(c) Using compressed air, blow carbon and oil from the bolt holes.

CAUTION:

Protect your eyes when using high pressure compressed air.

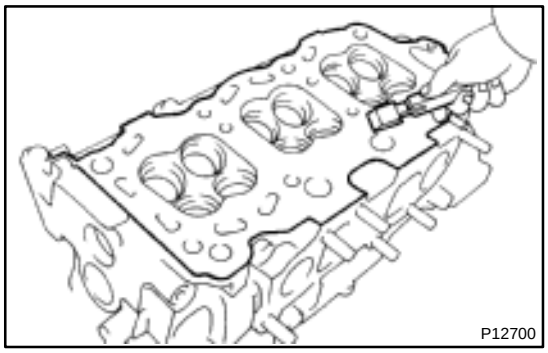

2. REMOVE GASKET MATERIAL

Using a gasket scraper, remove all the gasket material from the cylinder block contact surface.

NOTICE:

Be careful not to scratch the cylinder block contact surface.

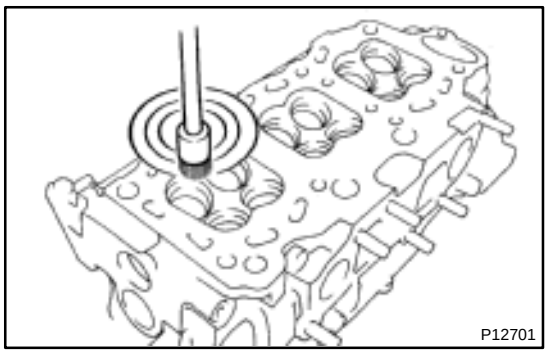

3. CLEAN COMBUSTION CHAMBERS

Using a wire brush, remove all the carbon from the combustion chambers.

NOTICE:

Be careful not to scratch the cylinder block contact surface.

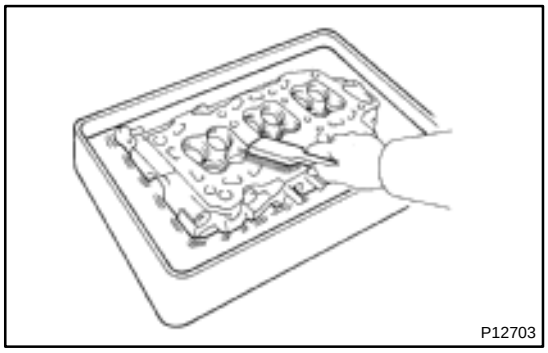

4. CLEAN CYLINDER HEADS

Using a soft brush and solvent, thoroughly clean the cylinder head.

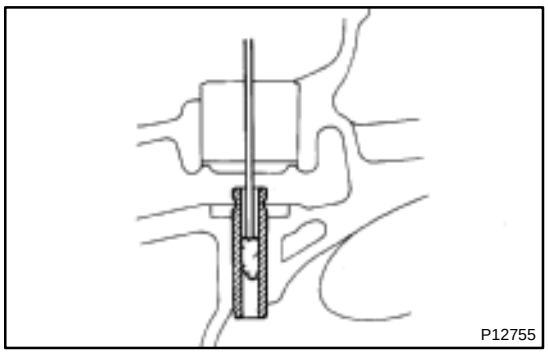

5. CLEAN VALVE GUIDE BUSHINGS

Using a valve guide bushing brush and solvent, clean all the guide bushings.

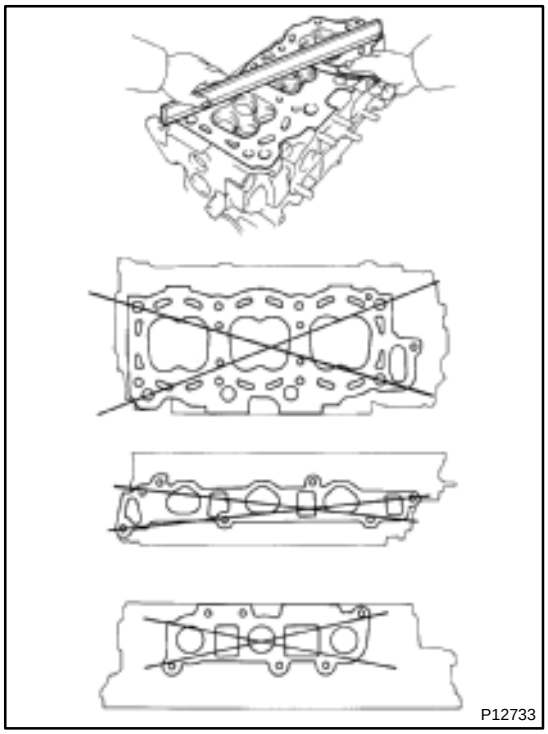

6. INSPECT FOR FLATNESS

Using a precision straight edge and feeler gauge, measure the surfaces contacting the cylinder block and the manifolds for warpage.

Maximum warpage: 0.10 mm (0.0039 in.)

If warpage is greater than maximum, replace the cylinder head.

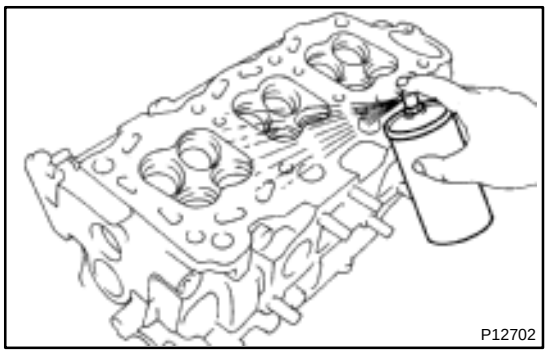

7. INSPECT FOR CRACKS

Using a dye penetrant, check the combustion chamber, intake ports, exhaust ports and cylinder block surface for cracks.

If cracked, replace the cylinder head.

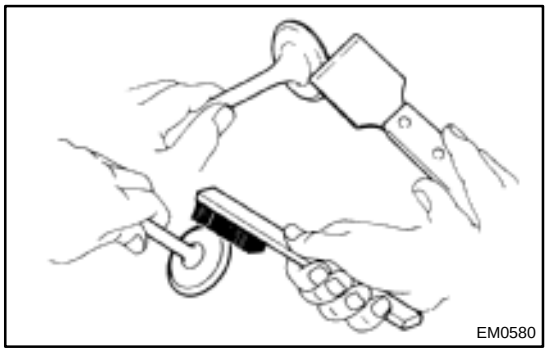

8. CLEAN VALVES

(a) Using a gasket scraper, chip off any carbon from the valve head.

(b) Using a wire brush, thoroughly clean the valve.

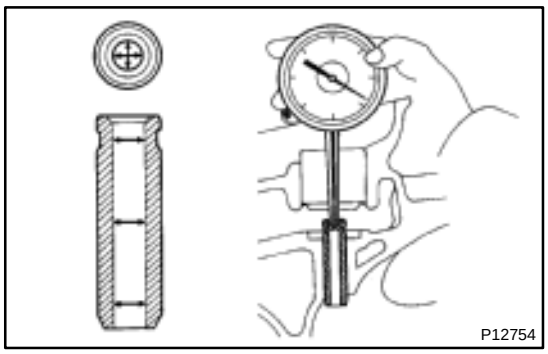

9. INSPECT VALVE STEMS AND GUIDE BUSHINGS

(a) Using a caliper gauge, measure the inside diameter of the guide bushing.

Bushing inside diameter:
5.510 – 5.530 mm (0.2169 – 0.2177 in.)

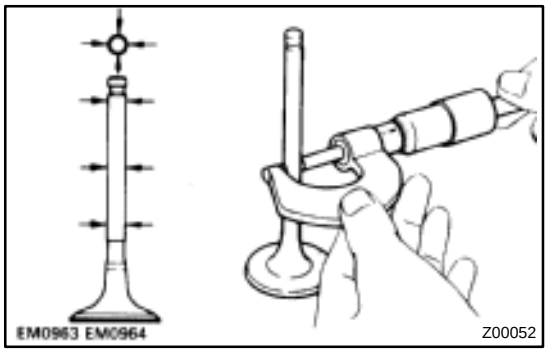

(b) Using a micrometer, measure the diameter of the valve stem.

Valve stem diameter:

Intake	5.470 – 5.485 mm (0.2154 – 0.2159 in.)
Exhaust	5.465 – 5.480 mm (0.2152 – 0.2157 in.)

(c) Subtract the valve stem diameter measurement from the guide bushing guide bushing inside diameter measurement.

Standard oil clearance:

Intake	0.025 – 0.060 mm (0.0010 – 0.0024 in.)
Exhaust	0.030 – 0.065 mm (0.0012 – 0.0026 in.)

Maximum oil clearance:

Intake	0.08 mm (0.0031 in.)
Exhaust	0.10 mm (0.0039 in.)

If the clearance is greater than maximum, replace the valve and guide bushing.

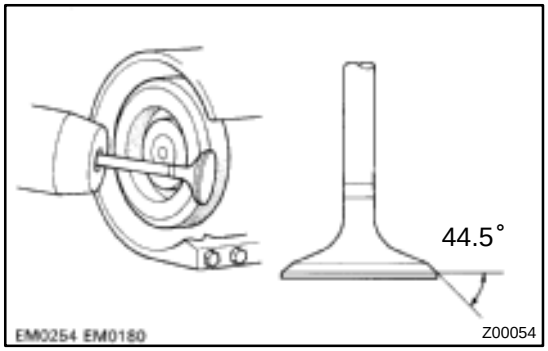

10. INSPECT AND GRIND VALVES

(a) Grind the valve enough to remove pits and carbon.

(b) Check that the valve is ground to the correct valve face angle.

Valve face angle: 44.5°

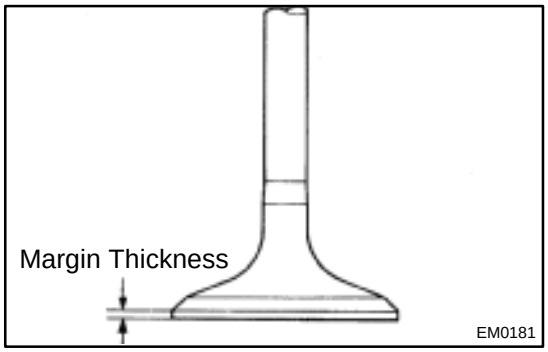

(c) Check the valve head margin thickness.

Standard margin thickness: 1.0 mm (0.039 in.)
Minimum margin thickness: 0.5 mm (0.020 in.)

If the margin thickness is less than minimum, replace the valve.

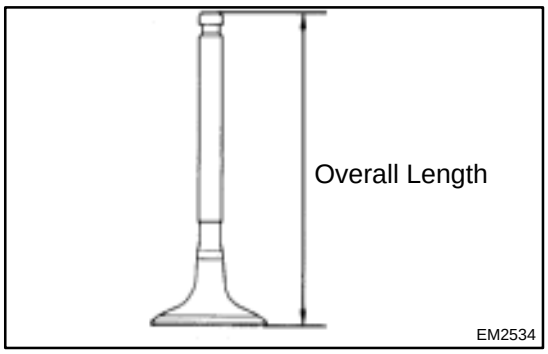

(d) Check the valve overall length.

Standard overall length:

Intake	95.45 mm (3.5779 in.)
Exhaust	95.40 mm (3.7559 in.)

Minimum overall length:

Intake	94.95 mm (3.7382 in.)
Exhaust	94.90 mm (3.7362 in.)

If the overall length is less than minimum, replace the valve.

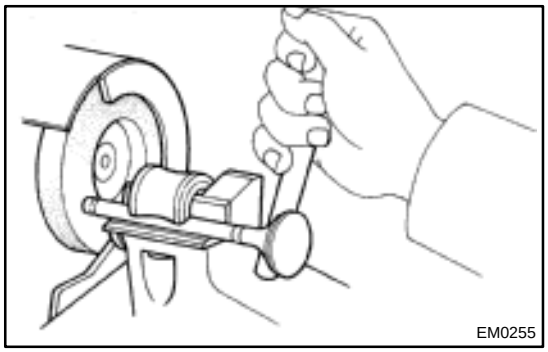

(e) Check the surface of the valve stem tip for wear.

If the valve stem tip is worn, resurface the tip with a grinder or replace the valve.

NOTICE:

Do not grind off more than minimum.

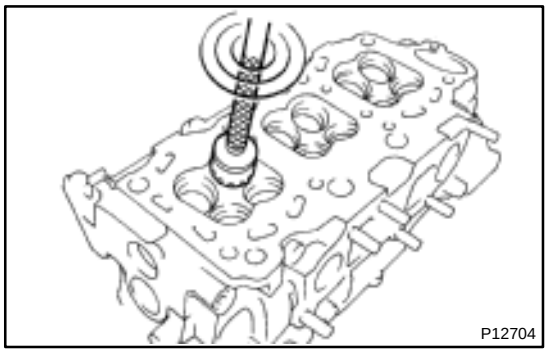

11. INSPECT AND CLEAN VALVE SEATS

(a) Using a 45° carbide cutter, resurface the valve seats. Remove only enough metal to clean the seats.

(b) Check the valve seating position.

Apply a light coat of prussian blue (or white lead) to the valve face. Lightly press the valve against the seat. Do not rotate valve.

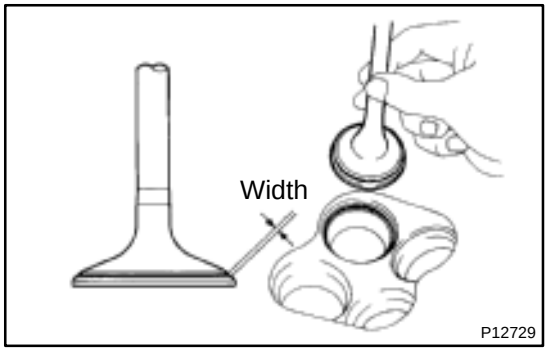

(c) Check the valve face and seat for the following:

If blue appears 360° around the face, the valve is concentric. If not, replace the valve.

If blue appears 360° around the valve seat, the guide and face are concentric. If not, resurface the seat.

Check that the seat contact is in the middle of the valve face with the following width:

1.0 – 1.4 mm (0.039 – 0.055 in.)

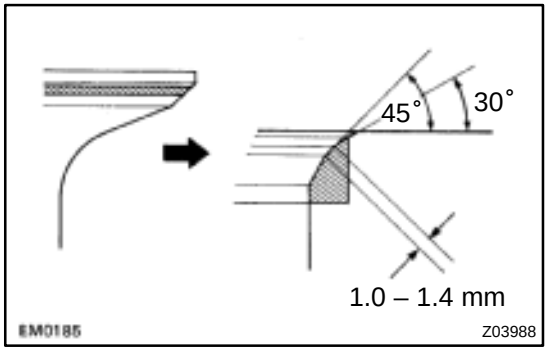

If not, correct the valve seats as follows:

(1) If the seating is too high on the valve face, use 30° and 45° cutters to correct the seat.

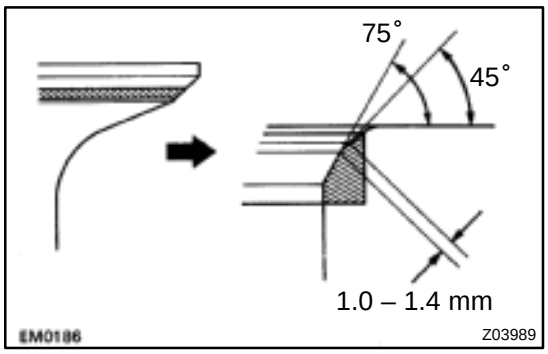

(2) If the seating is too low on the valve face, use 75° and 45° cutters to correct the seat.

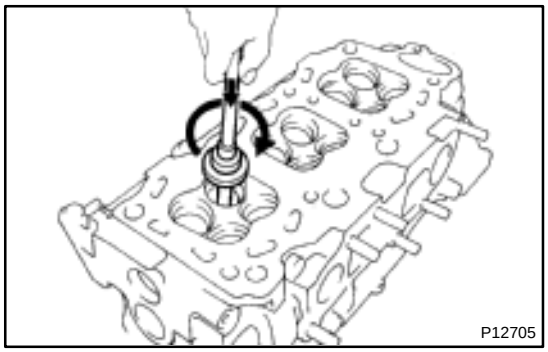

(d) Hand–lap the valve and valve seat with an abrasive compound.

(e) After hand–lapping, clean the valve and valve seat.

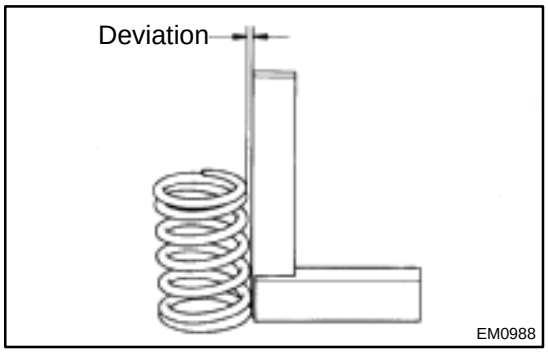

12. INSPECT VALVE SPRINGS

(a) Using a steel square, measure the deviation of the valve spring.

Maximum deviation: 2.0 mm (0.079 in.)

If the deviation is greater than maximum, replace the valve spring.

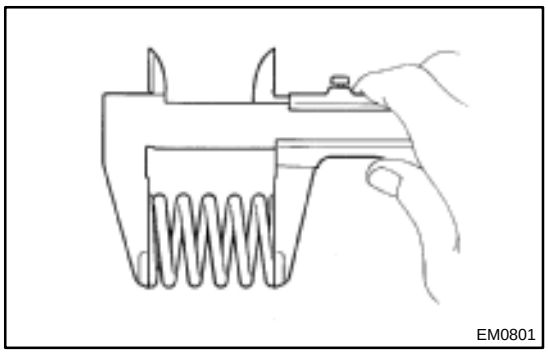

(b) Using vernier calipers, measure the free length of the valve spring.

Free length: 45.50 mm (1.7913 in.)

If the free length is not as specified, replace the valve spring.

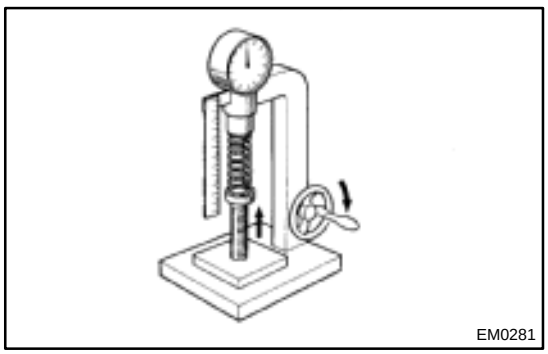

(c) Using a spring tester, measure the tension of the valve spring at the specified installed length.

Installed tension:
186 – 206 N (19.0 – 21.0 kgf, 41.9 – 46.3 lbf)
at 33.8 mm (1.331 in.)

If the installed tension is not as specified, replace the valve spring.

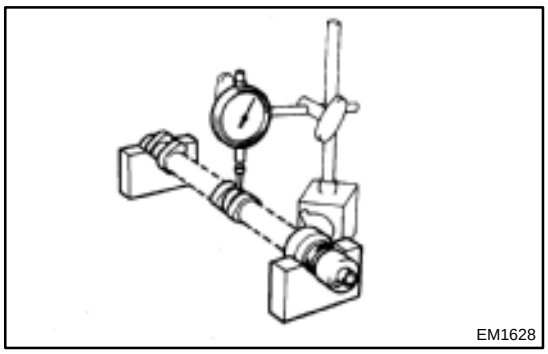
EM1628

13. INSPECT CAMSHAFT FOR RUNOUT

(a) Place the camshaft on V–blocks.
(b) Using a dial indicator, measure the circle runout at the center journal.

Maximum circle runout: 0.06 mm (0.0024 in.)

If the circle runout is greater than maximum, replace the camshaft.

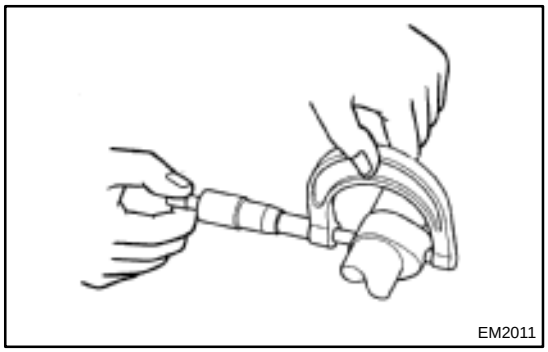
EM2011

14. INSPECT CAM LOBES

Using a micrometer, measure the cam lobe height.

Standard cam lobe height:

Intake	42.11 – 42.21 mm (1.6579 – 1.6618 in.)
Exhaust	41.96 – 42.06 mm (1.6520 – 1.6559 in.)

Minimum cam lobe height:

Intake	41.96 mm (1.6520 in.)
Exhaust	41.81 mm (1.6461 in.)

If the cam lobe height is less than minimum, replace the camshaft.

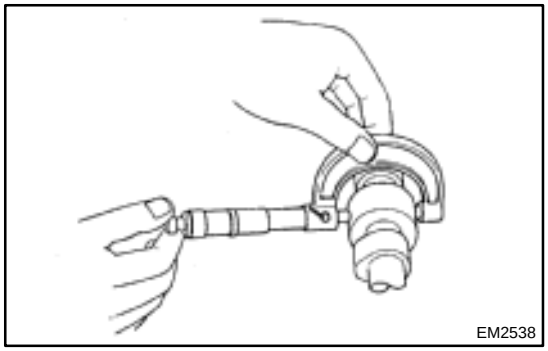
EM2538

15. INSPECT CAMSHAFT JOURNALS

Using a micrometer, measure the journal diameter.

Journal diameter:

Intake	26.949 – 26.965 mm (1.0610 – 1.0616 in.)
Exhaust	26.959 – 26.975 mm (1.0613 – 1.0620 in.)

If the journal diameter is not as specified, check the oil clearance.

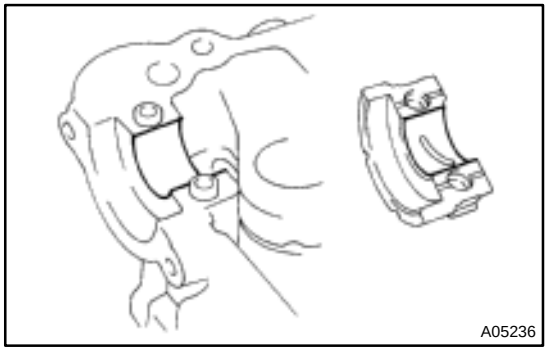
A05236

16. INSPECT CAMSHAFT BEARINGS

Check that bearings for flaking and scoring.

If the bearings are damaged, replace the bearing caps and cylinder head as a set.

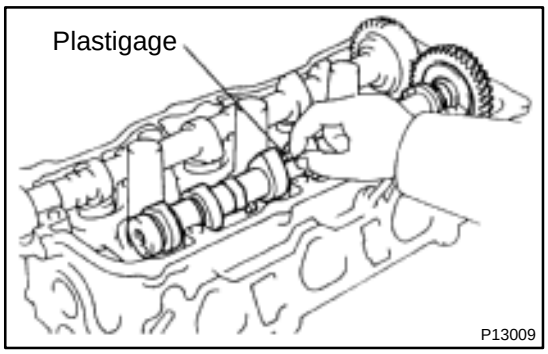

17. INSPECT CAMSHAFT JOURNAL OIL CLEARANCE

(a) Clean the bearing caps and camshaft journals.

(b) Place the camshafts on the cylinder head.

(c) Lay a strip of Plastigage across each of the camshaft journal.

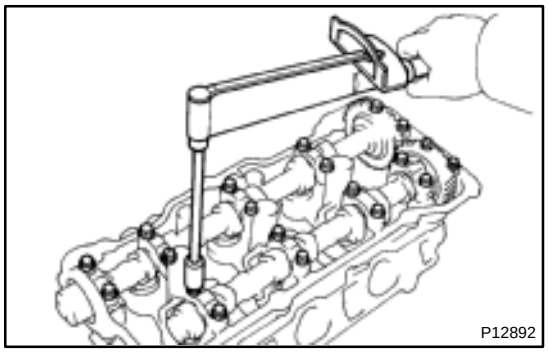

(d) Install the bearing caps. (See page EM–57)
Torque: 16 N·m (160 kgf·cm, 12 ft·lbf)

NOTICE:
Do not turn the camshaft.

(e) Remove the bearing caps.

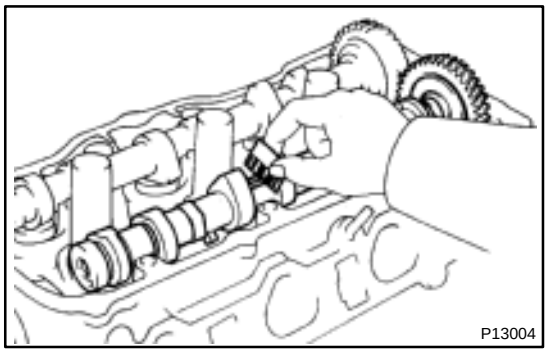

(f) Measure the Plastigage at its widest point.
Standard oil clearance:

Intake	0.035 – 0.072 mm (0.0014 – 0.0028 in.)
Exhaust	0.025 – 0.062 mm (0.0010 – 0.0024 in.)

Maximum oil clearance:

Intake	0.10 mm (0.0039 in.)
Exhaust	0.09 mm (0.0035 in.)

If the oil clearance is greater than maximum, replace the camshaft. If necessary, replace the bearing caps and cylinder head as a set.

(g) Completely remove the Plastigage.

(h) Remove the camshafts.

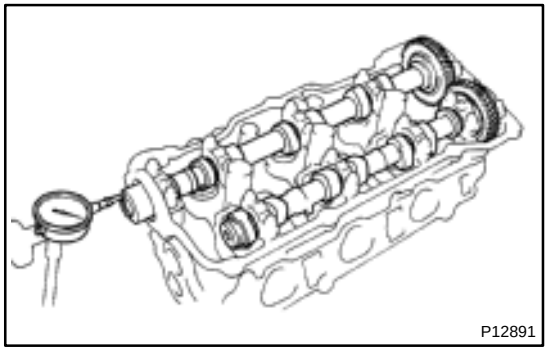

18. INSPECT CAMSHAFT THRUST CLEARANCE

(a) Install the camshafts. (See page EM–57)

(b) Using a dial indicator, measure the thrust clearance while moving the camshaft back and forth.
Standard thrust clearance:
0.040 – 0.090 mm (0.0016 – 0.0035 in.)
Maximum thrust clearance: 0.12 mm (0.0047 in.)

If the thrust clearance is greater than maximum, replace the camshaft. If necessary, replace the bearing caps and cylinder head as a set.

(c) Remove the camshafts.

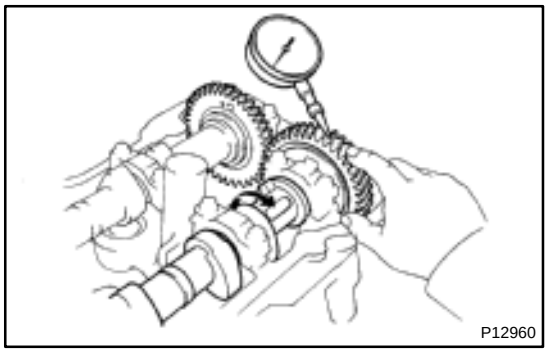

19. INSPECT CAMSHAFT GEAR BACKLASH

(a) Install the camshafts without installing the exhaust cam sub–gear. (See page EM–57)

(b) Using a dial indicator, measure the backlash.

Standard backlash:
0.020 – 0.200 mm (0.0008 – 0.0079 in.)
Maximum backlash: 0.30 mm (0.0188 in.)

If the backlash is greater then maximum, replace the camshafts.

(c) Remove the camshafts.

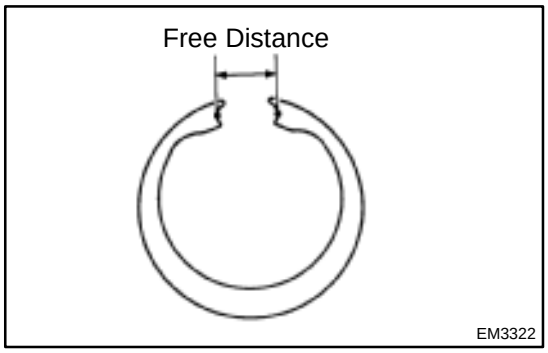

20. INSPECT CAMSHAFT GEAR SPRING

Using vernier calipers, measure the free distance between the spring ends.

Free distance: 18.2 – 18.8 mm (0.712 – 0.740 in.)

If the free distance is not as specified, replace the gear spring.

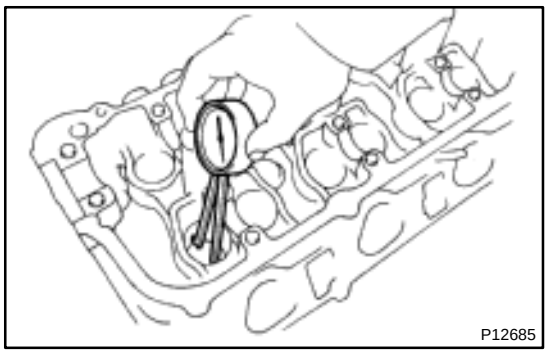

21. INSPECT VALVE LIFTERS AND LIFTER BORES

(a) Using a caliper gauge, measure the lifter bore diameter of the cylinder head.

Lifter bore diameter:
31.000 – 31.018 mm (1.2205 – 1.2212 in.)

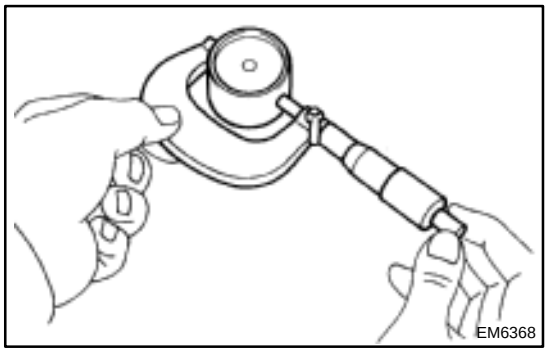

(b) Using a micrometer, measure the lifter diameter.

Lifter diameter:
30.966 – 30.976 mm (1.2191 – 1.2195 in.)

(c) Subtract the lifter diameter measurement from the lifter bore diameter measurement.

Standard oil clearance:
0.024 – 0.050 mm (0.0009 – 0.0020 in.)
Maximum oil clearance: 0.07 mm (0.0028 in.)

If the oil clearance is greater than maximum, replace the lifter.
If necessary, replace the cylinder head.

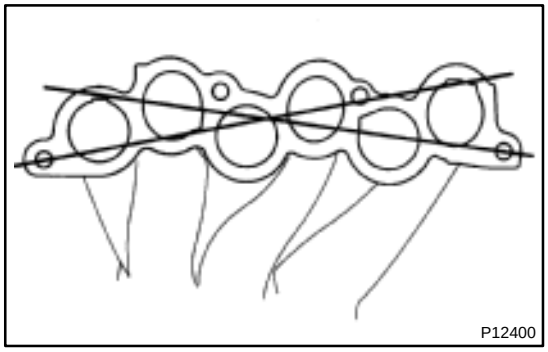

22. INSPECT AIR INTAKE CHAMBER

Using a precision straight edge and feeler gauge, measure the surface contacting the intake manifold for warpage.

Maximum warpage: 0.10 mm (0.0039 in.)

If warpage is greater than maximum, replace the chamber.

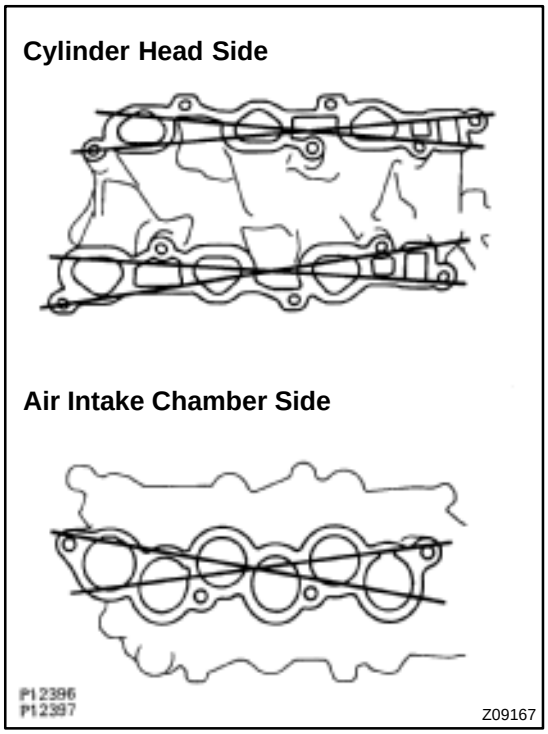

23. INSPECT INTAKE MANIFOLD

Using a precision straight edge and feeler gauge, measure the surface contacting the cylinder head and air intake chamber for warpage.

Maximum warpage:

Air intake chamber side	0.15 mm (0.0059 in.)
Cylinder head side	0.08 mm (0.0031 in.)

If warpage is greater than maximum, replace the manifold.

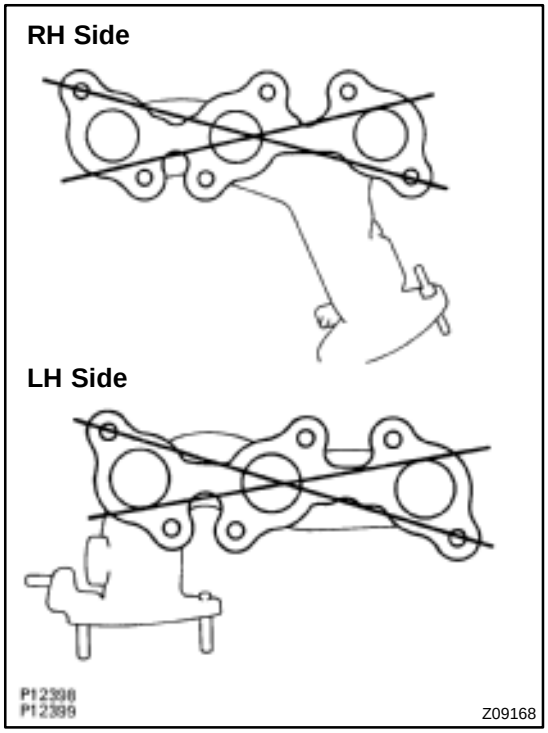

24. INSPECT EXHAUST MANIFOLDS

Using a precision straight edge and feeler gauge, measure the surface contacting the cylinder head for warpage.

Maximum warpage: 0.50 mm (0.0196 in.)

If warpage is greater than maximum, replace the manifold.

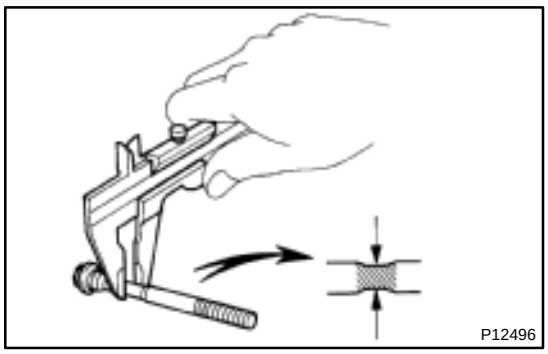

25. INSPECT 12 POINTED HEAD CYLINDER HEAD BOLTS

Using vernier calipers, measure the tension portion diameter of the bolt.

Standard outside diameter:
8.95 – 9.05 mm (0.3524 – 0.3563 in.)
Minimum outside diameter: 8.75 mm (0.3445 in.)

If the diameter is less than minimum, replace the bolt.

EM0YQ–01

REPLACEMENT

1. REPLACE VALVE GUIDE BUSHINGS

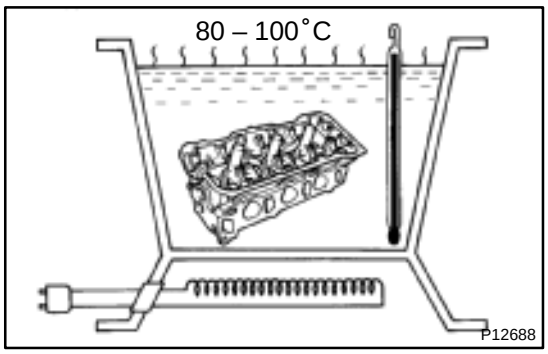

(a) Gradually heat the cylinder head to 80 – 100˚C (176 – 212˚F).

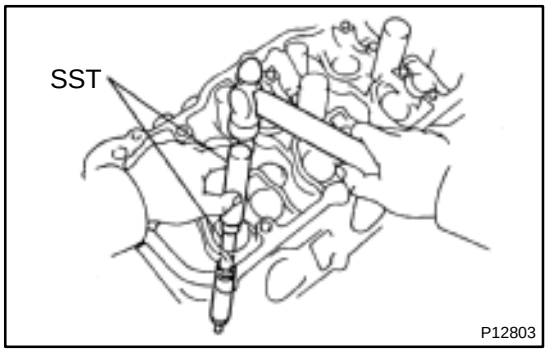

(b) Using SST and a hammer, tap out the guide bushing.
SST 09201–01055, 09950–70010 (09951–07100)

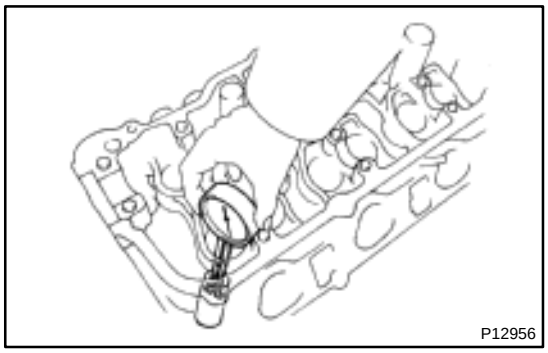

(c) Using a caliper gauge, measure the bushing bore diameter of the cylinder head.

Both intake and exhaust

Bushing bore diameter mm (in.)	Bushing size
10.295 – 10.313 (0.4053 – 0.4060)	Use STD
10.345 – 10.363 (0.4073 – 0.4080)	Use O/S 0.05

(d) Select a new guide bushing (STD or O/S 0.05).

If the bushing bore diameter of the cylinder head is greater than 10.313 mm (0.4060 in.), machine the bushing bore to the following dimension:

10.345 – 10.363 mm (0.4073 – 0.4080 in.)

If the bushing bore diameter of the cylinder head is greater than 10.363 mm (0.4080 in.), replace the cylinder head.

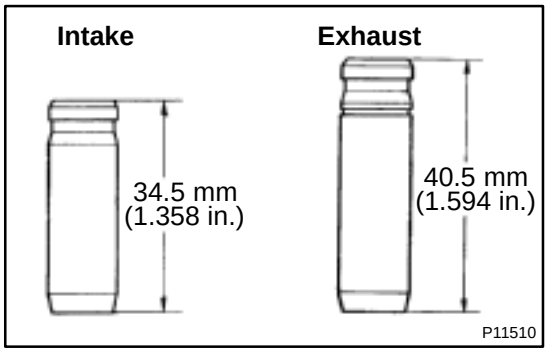

HINT:

Different bushings are used for the intake and exhaust.

(e) Gradually heat the cylinder head to 80 – 100˚C (176 – 212˚F).

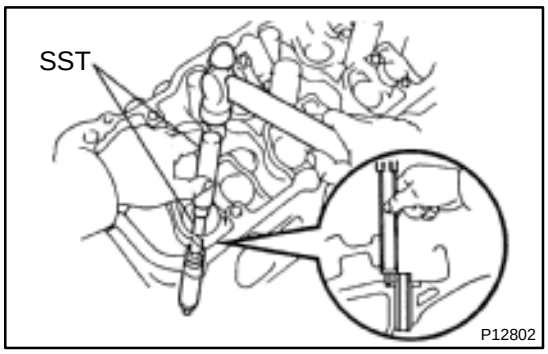

(f) Using SST and a hammer, tap in a new guide bushing to the specified protrusion height.
SST 09201–01055, 09950–70010 (09951–07100)
Protrusion height:

Intake	11.1 – 11.3 mm (0.437 – 0.453 in.)
Exhaust	8.9 – 9.3 mm – (0.350 – 0.366 in.)

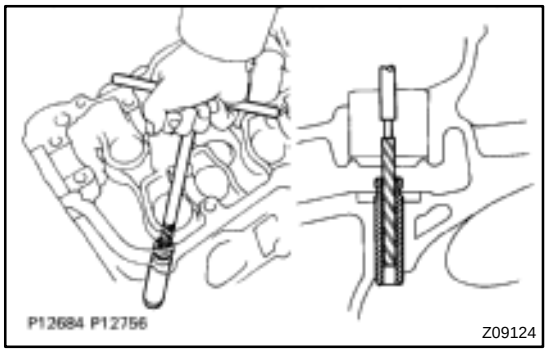

(g) Using a sharp 5.5 mm reamer, ream the guide bushing to obtain the standard specified clearance (See page EM–43) between the guide bushing and valve stem.

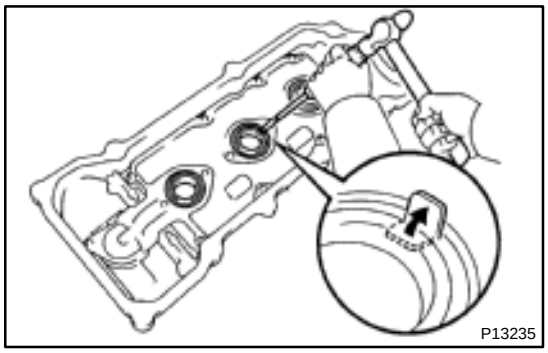

2. REPLACE SPARK PLUG TUBE GASKETS

(a) Bend up the tab on the ventilation baffle plate which prevents the gasket from the slipping out.

(b) Using a screwdriver and hammer, tap out the gasket.

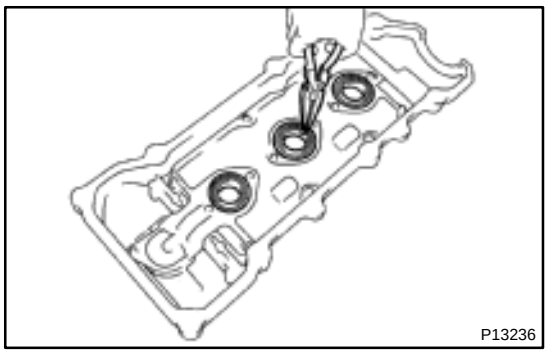

(c) Using needle–nose pliers, pry out the gasket.

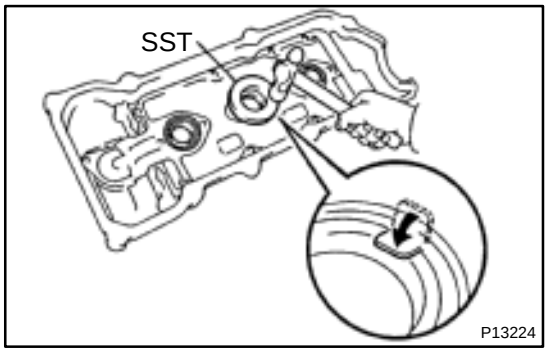

(d) Using SST and a hammer, tap in a new gasket until its surface is flush with the upper edge of the cylinder head cover.
SST 09608–03071

(e) Apply a light coat of MP grease to the gasket lip.

(f) Return the ventilation plate tab to its original position.

EM04V–04

REASSEMBLY

HINT:

Thoroughly clean all parts to be assembled.
Before installing the parts, apply new engine oil to all sliding and rotating surfaces.
Replace all gaskets and oil seals with new ones.

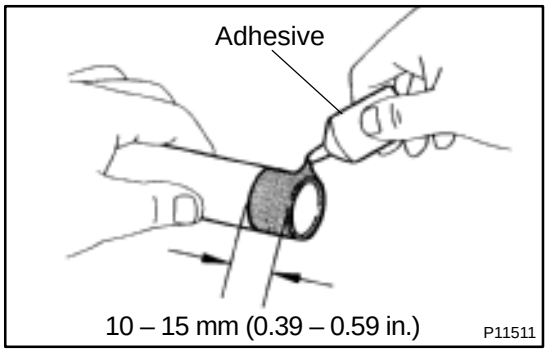

1. INSTALL SPARK PLUG TUBES

HINT:

When using a new cylinder head, spark plug tubes must be installed.

(a) Apply adhesive to the end of the spark plug tube.
Adhesive:
Part No. 08833–00070, THREE BOND 1324
or equivalent

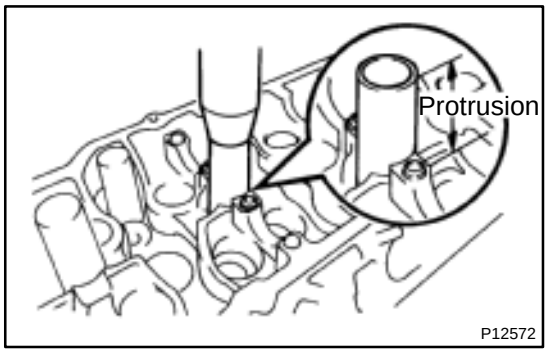

(b) Using a press, press in a new spark plug tube until there is 42.4 – 43.4 mm (1.669 – 1.709 in.) protruding from the camshaft bearing cap installation surface of the cylinder head.

NOTICE:

Avoid pressing a new spark plug tube in too far by measuring the amount of the protrusion while pressing.

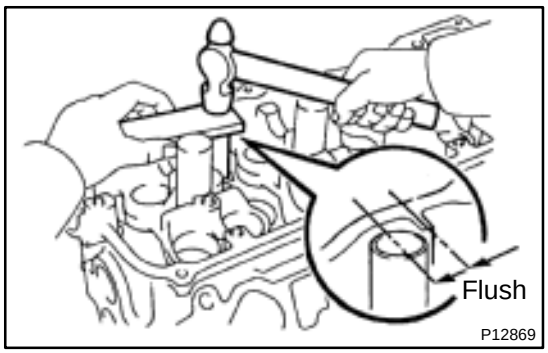

2. INSTALL PCV PIPES

HINT:

When using a new cylinder head, PCV pipe must be installed.
Using a wooden block and hammer, tap in a new PCV pipe until its top side is flush with the cylinder head edge.

NOTICE:

Be careful not to damage the cylinder head edge.

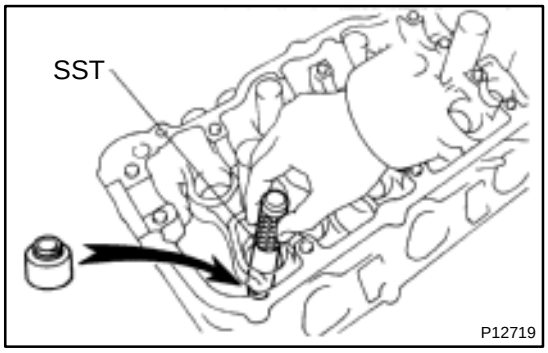

3. INSTALL VALVES

(a) Using SST, push in a new oil seal.
SST 09201–41020

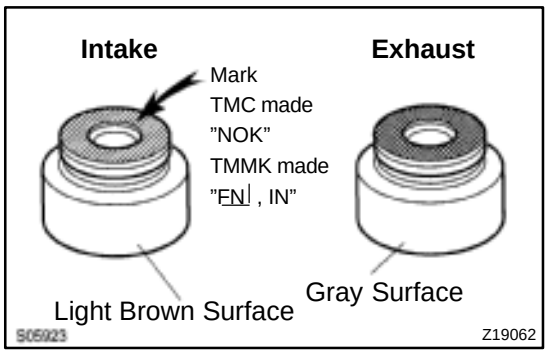

HINT:
The intake valve oil seal is light brown and the exhaust valve oil seal is gray.

NOTICE:

Pay much attention when assembling the oil seal for intake and exhaust. Assembling the wrong one may cause a failure.

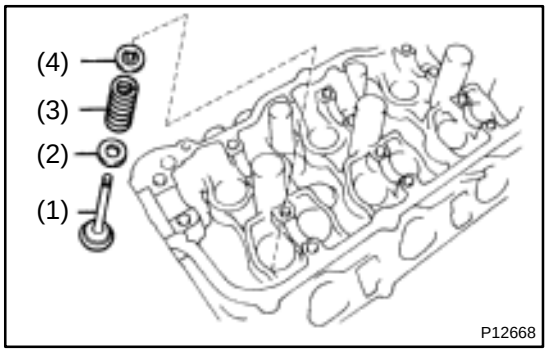

(b) Install the valve (1), spring seat (2), valve spring (3) and spring retainer (4).

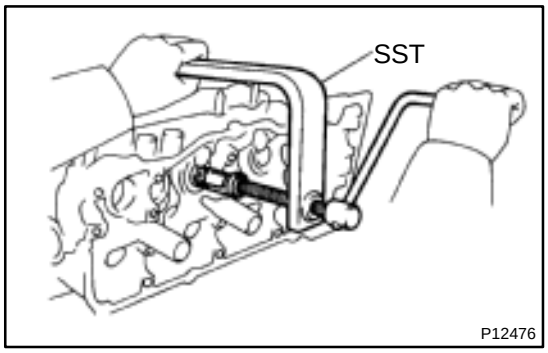

(c) Using SST, compress the valve spring and place the 2 keepers around the valve stem.
SST 09202–70020 (09202–00010)

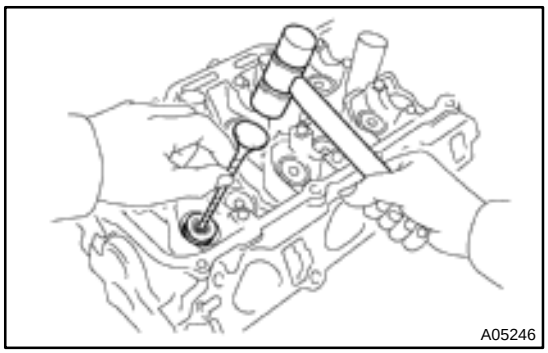

(d) Using a plastic–faced hammer and the valve stem (not in use) tip wound with vinyl tape, lightly tap the valve stem tip to assure proper fit.

NOTICE:

Be careful not do damage the valve stem tip.

4. INSTALL VALVE LIFTERS AND SHIMS

(a) Install the valve lifter and shim.

(b) Check that the valve lifter rotates smoothly by hand.

EM0YR–01

INSTALLATION

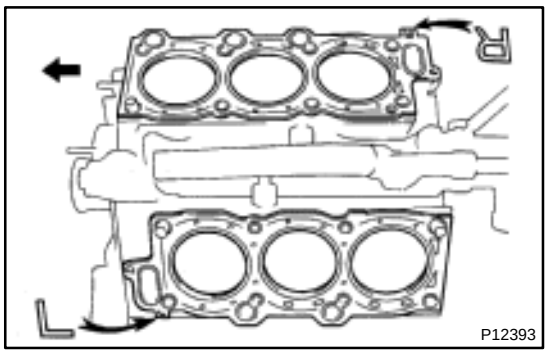

1. PLACE CYLINDER HEAD ON CYLINDER BLOCK

(a) Place 2 new cylinder head gaskets in position on the cylinder block.

NOTICE:

Be careful of the installation direction.

(b) Place the 2 cylinder heads in position on the cylinder head gaskets.

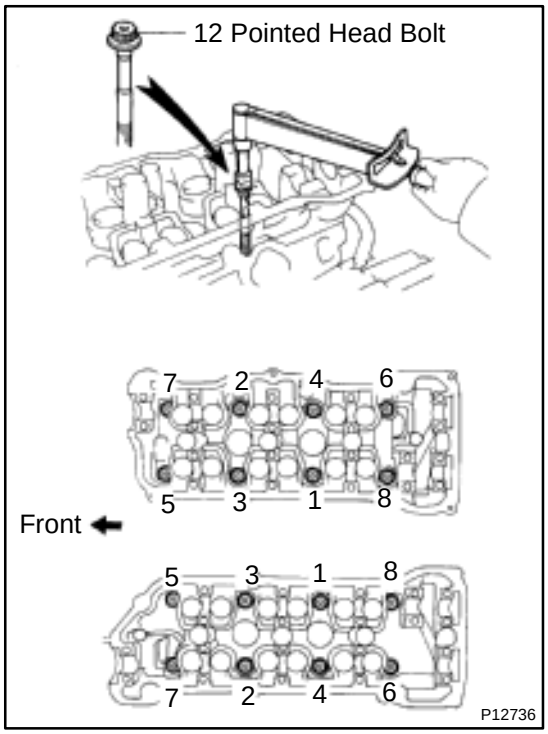

2. INSTALL 12 POINTED HEAD CYLINDER HEAD BOLTS

HINT:

The cylinder head bolts are tightened in 2 progressive steps (steps (c) and (e)).

If any bolt is broken or deformed, replace it.

(a) Apply a light coat of engine oil on the threads and under the heads of the cylinder head bolts.

(b) Install the plate washer to the cylinder head bolt.

(c) Install and uniformly tighten the cylinder head bolts on each cylinder head, in several passes, in the sequence shown, then repeat for the other side, as shown.

Torque: 54 N·m (550 kgf·cm, 40 ft·lbf)

If any of the cylinder head bolts does not meet the torque specification, replace the cylinder head bolt.

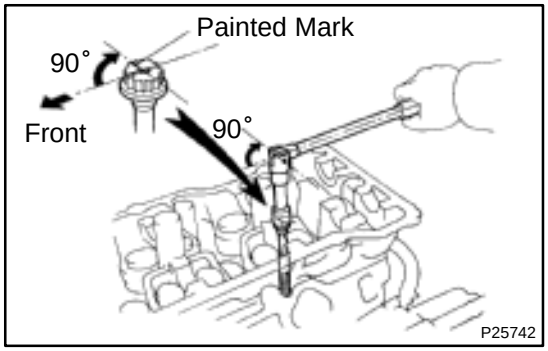

(d) Mark the front of the cylinder head bolt head with paint.

(e) Retighten the cylinder head bolts by 90° in the numerical order shown.

(f) Check that the painted mark is now at a 90° angle to the front.

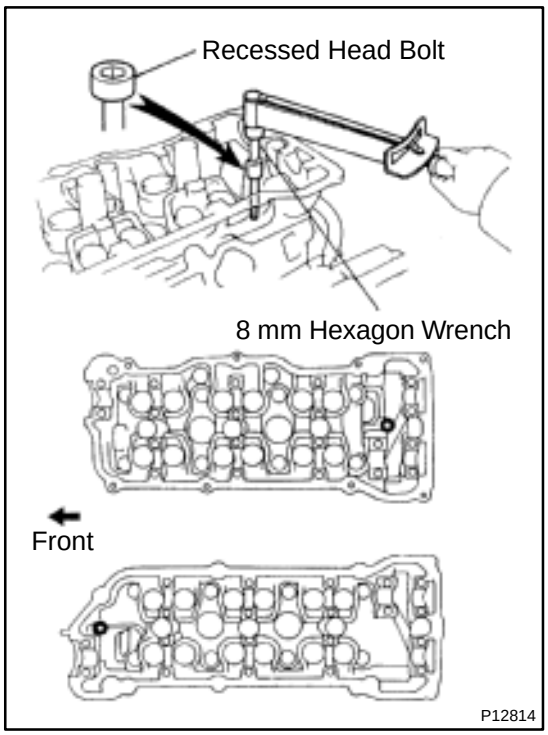

3. INSTALL RECESSED HEAD CYLINDER HEAD BOLTS

(a) Apply a light coat of engine oil on the threads and under the heads of the cylinder head bolts.

(b) Using an 8 mm hexagon wrench, install the cylinder head bolt on each cylinder head, then repeat for the other side, as shown.

Torque: 18.5 N·m (185 kgf·cm, 13 ft·lbf)

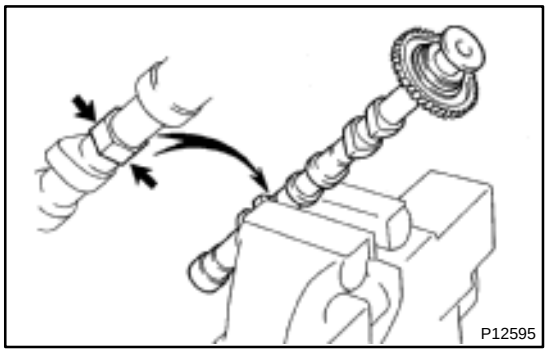

4. ASSEMBLE EXHAUST CAMSHAFTS

(a) Mount the hexagonal wrench head portion of the camshaft in a vise.

NOTICE:

Be careful not to damage the camshaft.

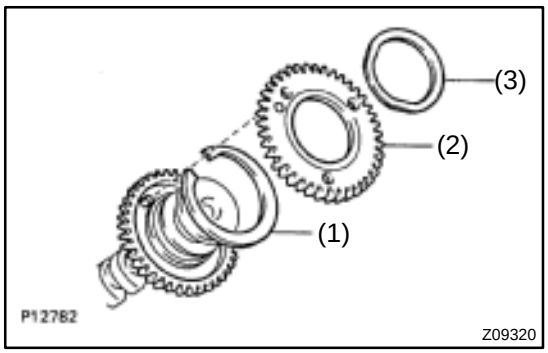

(b) Install the camshaft gear spring (1) and camshaft sub–gear (2).

HINT:

Attach the pins on the gears to the gear spring ends.

(c) Install the wave washer (3).

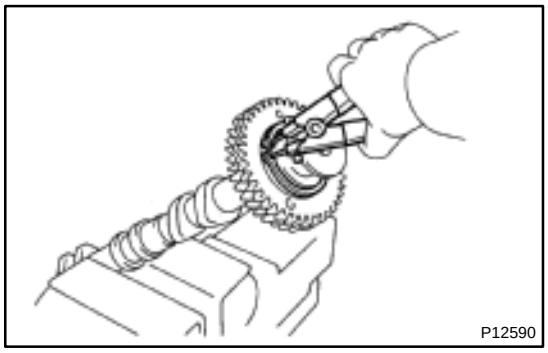

(d) Using snap ring pliers, install the snap ring.

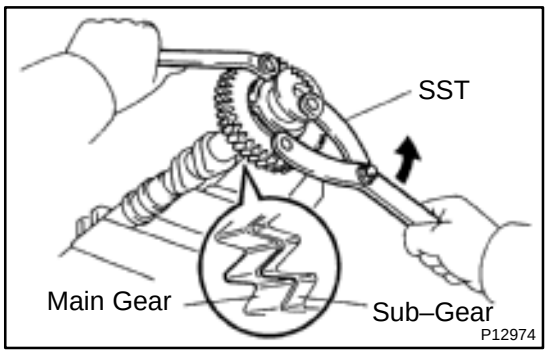

(e) Using SST, align the holes of the camshaft main gear and sub–gear by turning camshaft sub–gear counterclockwise, and temporarily install a service bolt.
SST 09960–10010 (09962–01000, 09963–00500)

(f) Align the gear teeth of the main gear and sub–gear, and tighten the service bolt.

5. INSTALL CAMSHAFTS OF RH CYLINDER HEAD

NOTICE:

Since the thrust clearance of the camshaft is small, the camshaft must be held level while it is being installed. If the camshaft is not level, the portion of the cylinder head receiving the shaft thrust may crack or be damaged, causing the camshaft to seize or break. To avoid this, the following steps should be carried out.

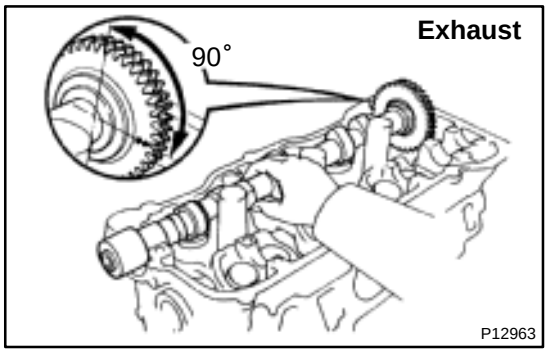

(a) Install the exhaust camshaft.
(1) Apply new engine oil to the thrust portion and journal of the camshaft.
(2) Place the exhaust camshaft at 90° angle of timing mark (2 dot marks) on the cylinder head.
(3) Apply MP grease to a new oil seal lip.

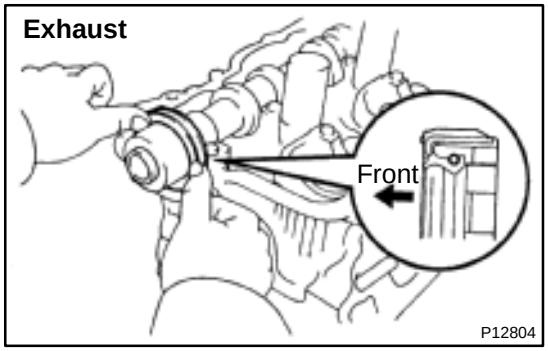

(4) Install the oil seal to the camshaft.

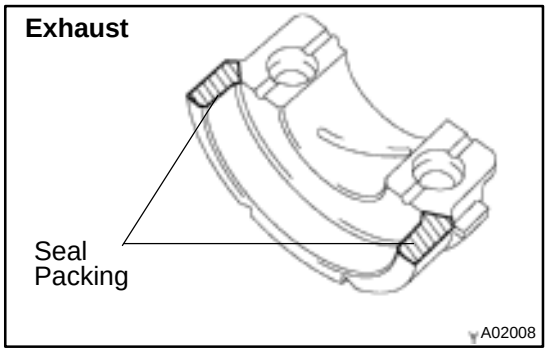

(5) Remove any old packing (FIPG) material.
(6) Apply seal packing to the No.1 bearing cap as shown.

Seal packing: Part No. 08826–00080 or equivalent

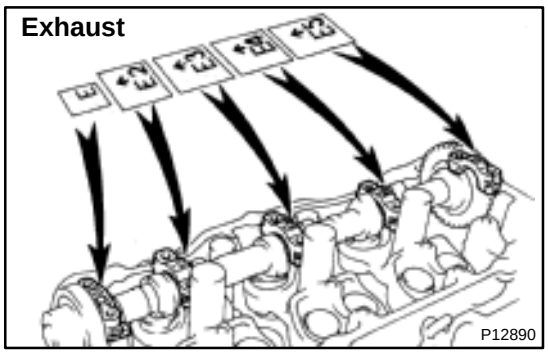

(b) Install the 5 bearing caps in their proper locations.

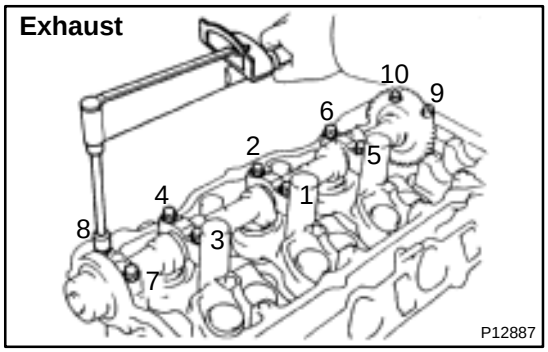

(c) Apply a light coat of engine oil on the threads and under the heads of the bearing cap bolts.

(d) Install and uniformly tighten the 10 bearing cap bolts, in several passes, in the sequence shown.

Torque: 16 N·m (160 kgf·cm, 12 ft·lbf)

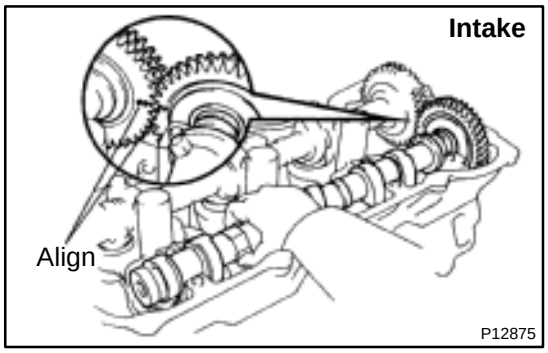

(e) Install the Intake camshaft.

(1) Apply new engine oil to the thrust portion and journal of the camshaft.

(2) Align the timing marks (2 dot marks) of the camshaft drive and driven gears.

(3) Place the intake camshaft on the cylinder head.

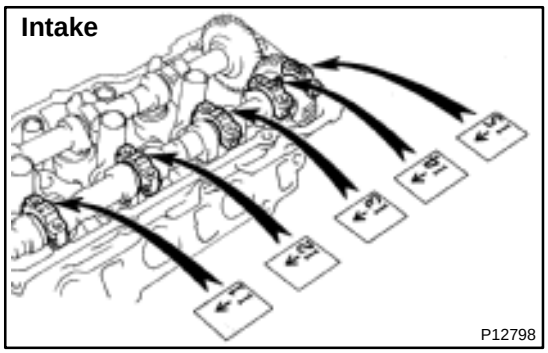

(4) Install the 5 bearing caps in their proper locations.

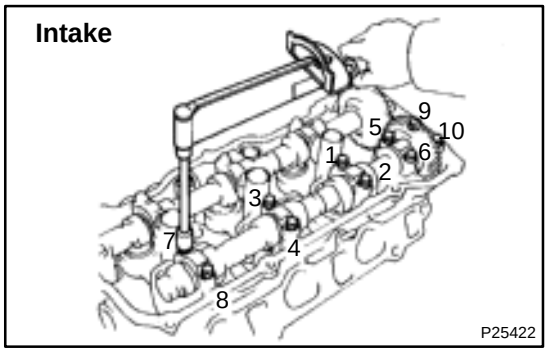

(5) Apply a light coat of engine oil on the threads and under the heads of the bearing cap bolts.

(6) Install and uniformly tighten the 10 bearing cap bolts, in several passes, in the sequence shown.

Torque: 16 N·m (160 kgf·cm, 12 ft·lbf)

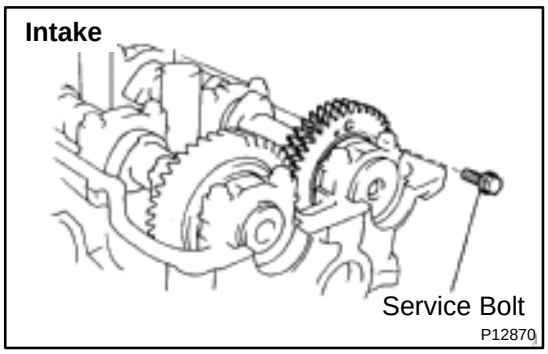

(7) Remove the service bolt.

6. INSTALL CAMSHAFTS OF LH CYLINDER HEAD

NOTICE:

Since the thrust clearance of the camshaft is small, the camshaft must be held level while it is being installed. If the camshaft is not level, the portion of the cylinder head receiving the shaft thrust may crack or be damaged, causing the camshaft to seize or break. To avoid this, the following steps should be carried out.

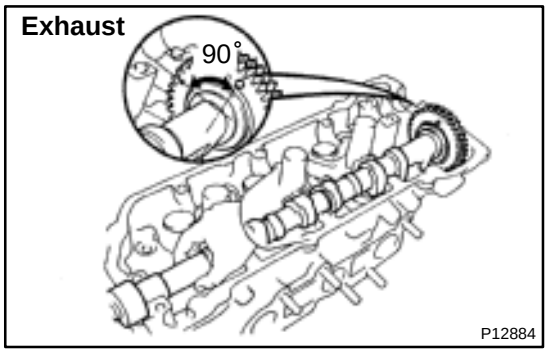

(a) Install the exhaust camshaft.

(1) Apply new engine oil to the thrust portion and journal of the camshaft.

(2) Place the exhaust camshaft at 90° angle of timing mark (1 dot mark) on the cylinder head.

(3) Apply MP grease to a new oil seal lip.

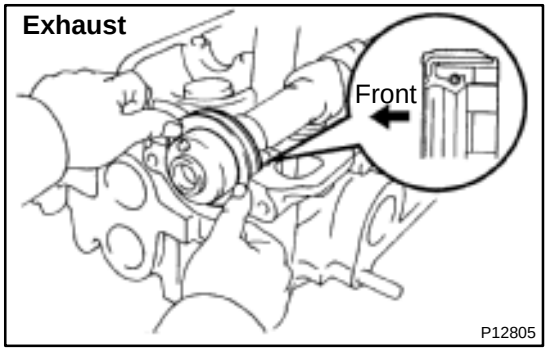

(4) Install the oil seal to the camshaft.

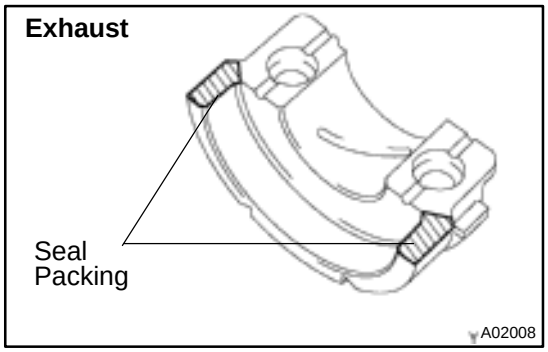

(5) Remove any old packing (FIPG) material.

(6) Apply seal packing to the No.1 bearing cap as shown.

Seal packing: Part No. 08826–00080 or equivalent

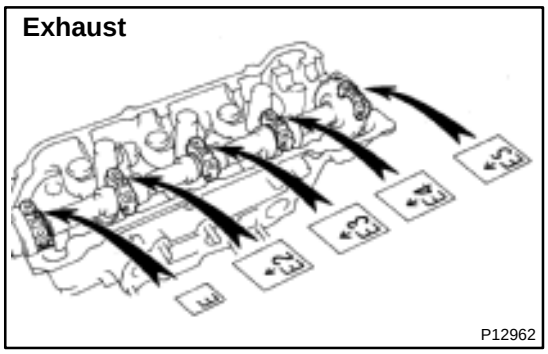

(7) Install the 5 bearing caps in their proper locations.

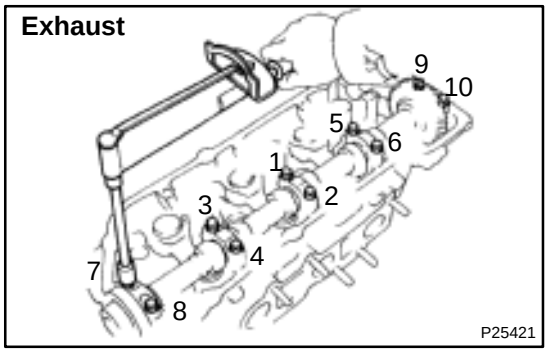

(8) Apply a light coat of engine oil on the threads and under the heads of the bearing cap bolts.
(9) Install and uniformly tighten the 10 bearing cap bolts, in several passes, in the sequence shown.

Torque: 16 N·m (160 kgf·cm, 12 ft·lbf)

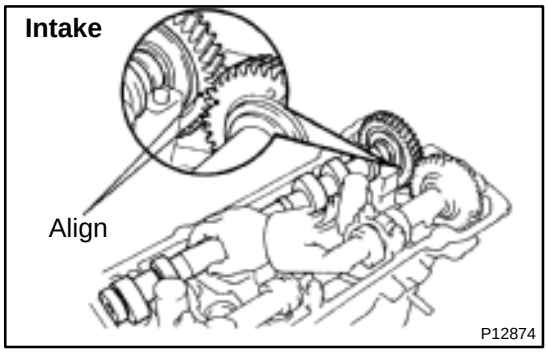

(b) Install the intake camshaft.
(1) Apply new engine oil to the thrust portion and journal of the camshaft.
(2) Align the timing marks (1 dot mark) of the camshaft drive and driven gears.
(3) Place the intake camshaft on the cylinder head.

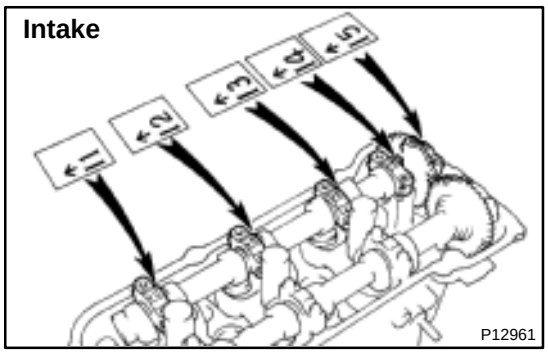

(4) Install the 5 bearing caps in their proper locations.

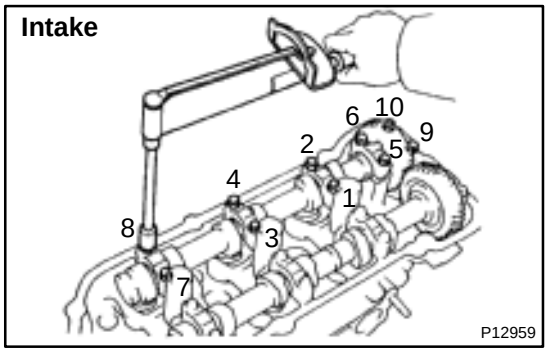

(5) Apply a light coat of engine oil on the threads and under the heads of bearing cap bolts.
(6) Install and uniformly tighten the 10 bearing cap bolts, in several passes, in the sequence shown.

Torque: 16 N·m (160 kgf·cm, 12 ft·lbf)

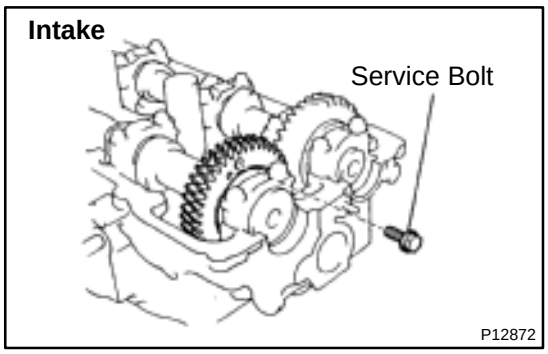

(7) Remove the service bolt.

7. CHECK AND ADJUST VALVE CLEARANCE
(See page EM–4)

Turn the camshaft and position the cam lobe upward, and check and adjust the valve clearance.

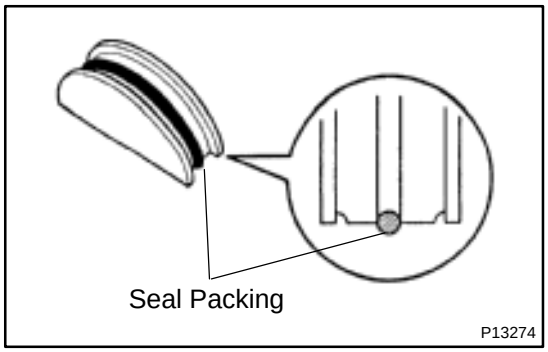

8. INSTALL SEMI–CIRCULAR PLUGS

(a) Remove any old packing (FIPG) material.

(b) Apply seal packing to the semi–circular plug grooves.
Seal packing: Part No. 08826–00080 or equivalent

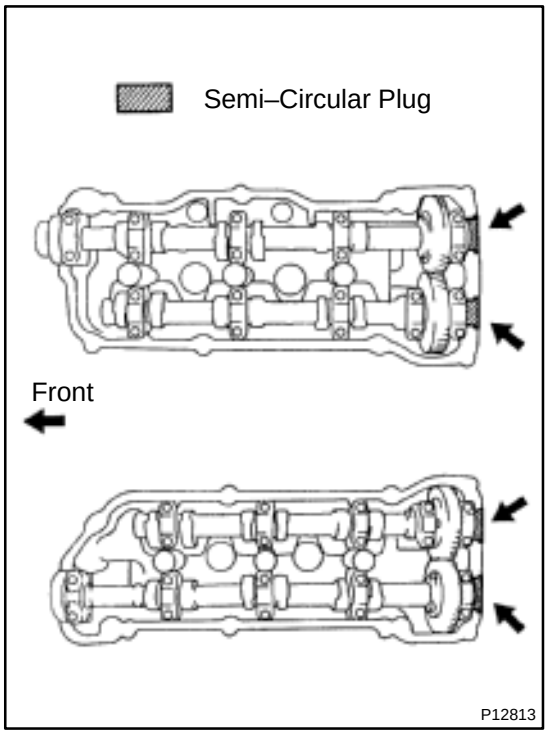

(c) Install the 4 semi–circular plugs to the cylinder heads.

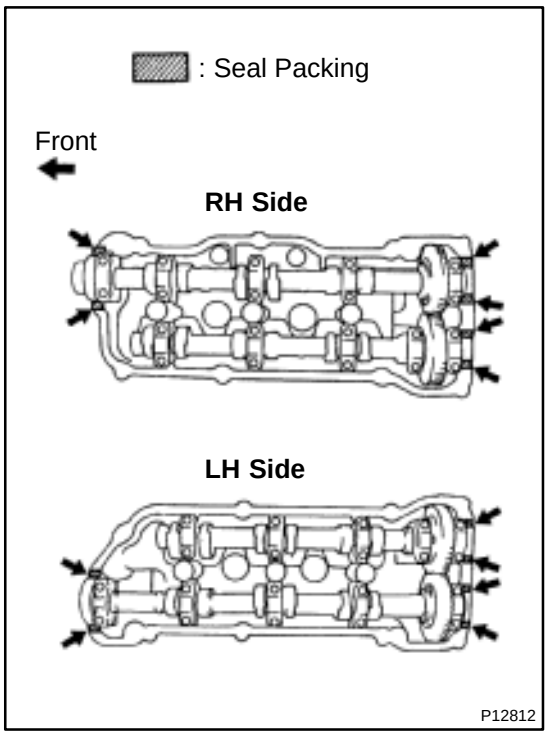

9. INSTALL CYLINDER HEAD COVERS

(a) Apply seal packing to the cylinder heads as shown in the illustration.
Seal packing: Part No. 08826–00080 or equivalent

(b) Install the gasket to the cylinder head cover.

(c) Install the cylinder head cover with the 8 bolts. Uniformly tighten the bolts in several passes. Install the 2 cylinder head covers.
Torque: 8 N·m (80 kgf·cm, 69 in.·lbf)

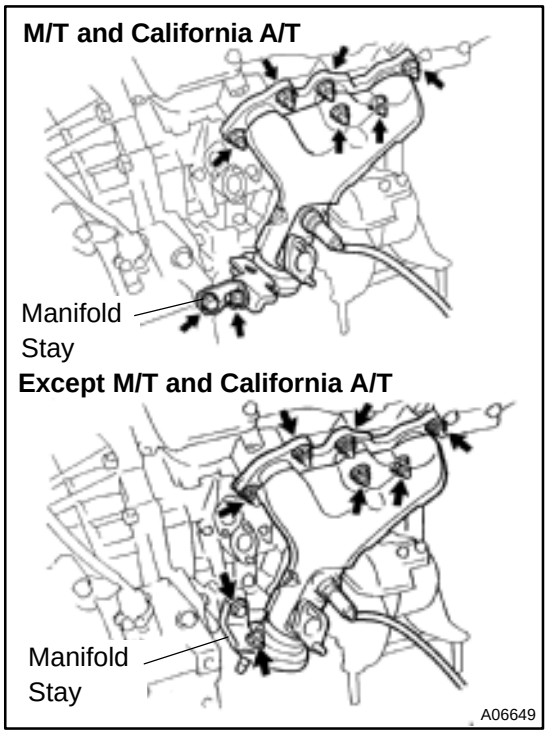

10. INSTALL RH EXHAUST MANIFOLD

(a) Install a new gasket and the exhaust manifold with the 6 nuts. Uniformly tighten the nuts in several passes.
Torque: 49 N·m (500 kgf·cm, 36 ft·lbf)

(b) Install the exhaust manifold stay with the bolt and nut. Alternately tighten the bolt and nut.
Torque:
M/T and California A/T
34 N·m (350 kgf·cm, 25 ft·lbf)
Except M/T and California A/T:
20 N·m (200 kgf·cm, 15 ft·lbf)

(c) California:
Connect the A/F sensor connector.

(d) Except California:
Connect the heated oxygen sensor (bank 1 sensor 1) connector.

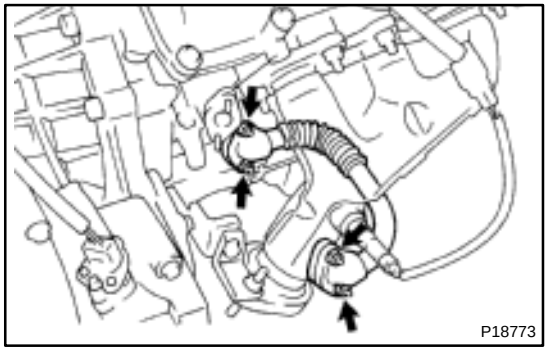

11. INSTALL NO.1 EGR PIPE

Install 2 new gaskets and the EGR pipe with the 4 nuts.
Torque: 12 N·m (120 kgf·cm, 9 ft·lbf)

12. INSTALL PS PUMP BRACKET
Torque: 43 N·m (440 kgf·cm, 32 ft·lbf)

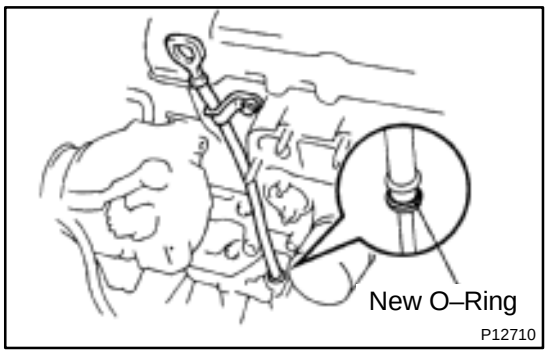

13. INSTALL OIL DIPSTICK AND GUIDE

(a) Install a new O–ring to the dipstick guide.

(b) Apply soapy water to the O–ring.

(c) Push in the dipstick guide end into the guide hole of the No.1 oil pan.

(d) Install the dipstick guide with the bolt.
Torque: 8 N·m (80 kgf·cm, 69 in.·lbf)

(e) Install the dipstick.

14. INSTALL CAMSHAFT POSITION SENSOR

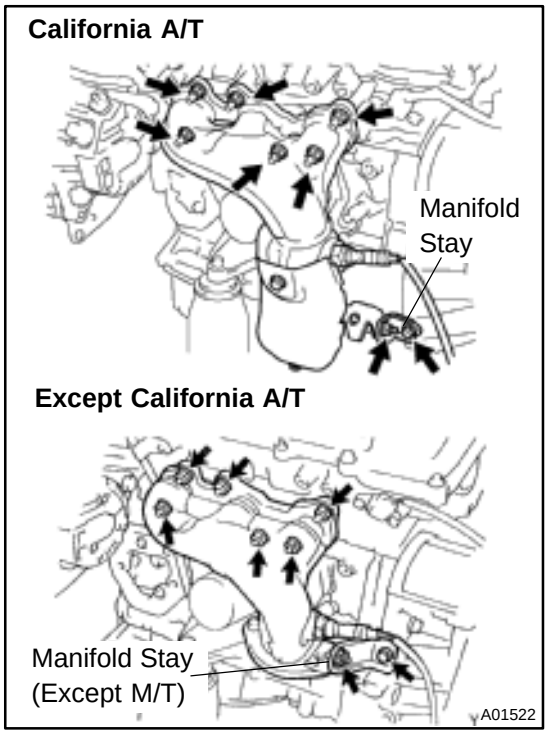

15. INSTALL LH EXHAUST MANIFOLD

(a) Install a new gasket and the exhaust manifold with the 6 nuts. Uniformly tighten the nuts in several passes.
Torque: 49 N·m (500 kgf·cm, 36 ft·lbf)

(b) Except M/T:
Install the exhaust manifold stay with the bolt and nut. Alternately tighten the bolt and nut.
Torque:
California A/T:
34 N·m (350 kgf·cm, 25 ft·lbf)
Except California A/T:
20 N·m (200 kgf·cm, 15 ft·lbf)

(c) California:
Connect the A/F sensor connector.

(d) Except California:
Connect the heated oxygen sensor (bank 2 sensor 1) connector.

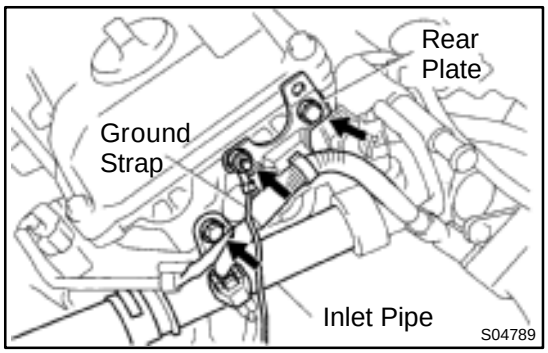

16. INSTALL WATER INLET PIPE

(a) Install a new O–ring to the water inlet pipe.

(b) Apply soapy water to the O–ring.

(c) Connect the water inlet pipe to the water inlet.

(d) Install the bolt holding the water inlet pipe to the cylinder head.
Torque: 19.5 N·m (200 kgf·cm, 14 ft·lbf)

17. INSTALL CYLINDER HEAD REAR PLATE
Torque: 8 N·m (80 kgf·cm, 69 in.·lbf)

18. INSTALL ENGINE WIRE PROTECTOR

19. INSTALL NO.3 TIMING BELT COVER

(a) Check that the timing belt cover gaskets have no cracks or peeling, etc.

If the gaskets have cracks or peeling etc., replace them using these steps:

Using a screwdriver and gasket scraper, remove all the old gasket material.

Thoroughly clean all components to remove all the loose material.

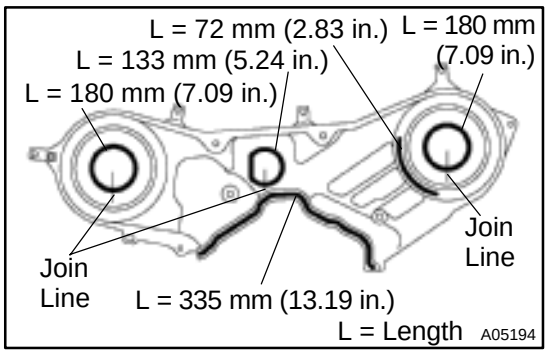

Remove the backing paper from a new gasket and install the gasket evenly to the part of the timing belt cover shaded black in the illustration.

NOTICE:

When joining 2 gaskets, do not leave a gap between them. Cut off any excess gasket.

After installing the gasket, press down on it so that the adhesive firmly sticks to the timing belt cover.

(b) Install the timing belt cover with the 6 bolts.
Torque: 8.5 N·m (85 kgf·cm, 74 in.·lbf)

(c) Install the 3 engine wire clamps to the timing belt cover.

20. INSTALL NO.2 IDLER PULLEY (See page EM–21)

21. INSTALL CAMSHAFT TIMING PULLEYS (See page EM–21)

22. INSTALL TIMING BELT (See page EM–21)

23. INSTALL SPARK PLUGS

24. INSTALL IGNITION COILS

25. INSTALL PS PUMP DRIVE BELT

26. INSTALL GENERATOR DRIVE BELT (See page SR–28)

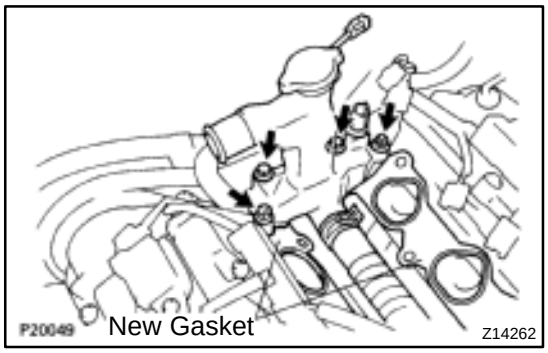

27. INSTALL WATER OUTLET

(a) Install 2 new gaskets.

(b) Connect the water outlet to the bypass hose.

(c) Install the water outlet with the 2 bolts, 2 nuts and 2 plate washers. Alternately tighten the bolts and nuts.
Torque: 15 N·m (150 kgf·cm, 11 ft·lbf)

NOTICE:

Do not scratch the seal surface of the water outlet with the stud bolt.

(d) Connect the ECT sender gauge connector.

(e) Connect the ECT sensor connector.

(f) Connect the ground strap (connector).

(g) Connect the radiator hose.

(h) Connect the engine coolant reservoir hose.

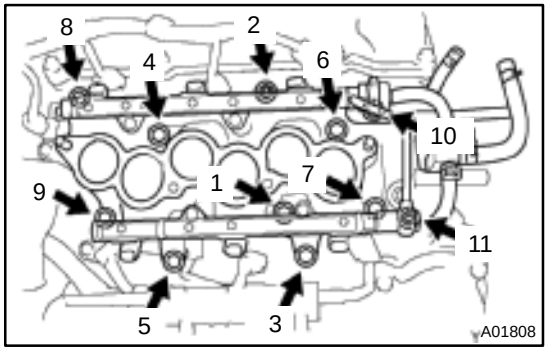

28. INSTALL INTAKE MANIFOLD ASSEMBLY

(a) Install the intake manifold, delivery pipe and injectors assembly with the 9 bolts, 2 plate washers and 2 nuts. Uniformly tighten the bolts and nuts, in several passes, in the sequence shown.
Torque: 15 N·m (150 kgf·cm, 11 ft·lbf)

(b) Connect the fuel inlet hose to the fuel filter.

CAUTION:
Perform connecting operations of the fuel tube connector (quick type) after observing the precaution.
(See page SF–1)

(c) Connect the heater hose to the intake manifold.

29. RETIGHTEN WATER OUTLET MOUNTING BOLTS AND NUTS

Tighten the 2 bolts and 2 nuts.

Torque: 15 N·m (150 kgf·cm, 11 ft·lbf)

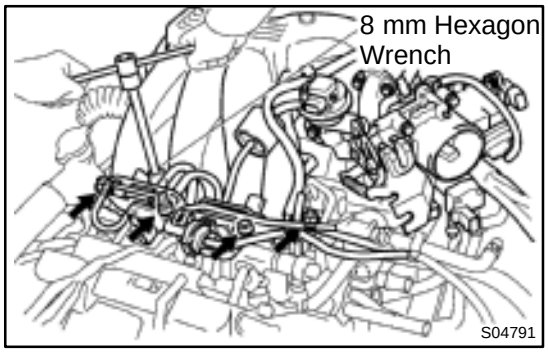

30. INSTALL AIR INTAKE CHAMBER ASSEMBLY

(a) Using an 8 mm hexagon wrench, install a new gasket and the air intake chamber assembly with the 2 bolts and 2 nuts. Uniformly tighten the bolts and nuts in several passes.

Torque: 43 N·m (440 kgf·cm, 32 ft·lbf)

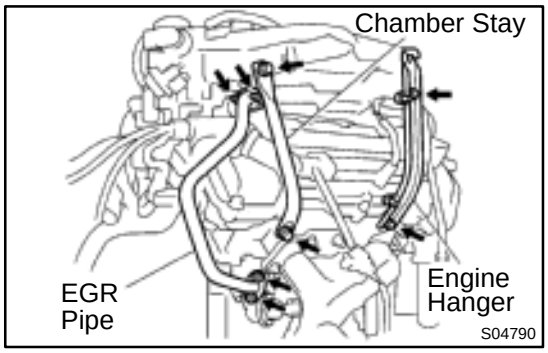

(b) Install 2 new gaskets and No.2 EGR pipe with the 4 nuts.
Torque: 12 N·m (120 kgf·cm, 9 ft·lbf)

(c) Install the No.1 engine hanger with the 2 bolts.
Torque: 39 N·m (400 kgf·cm, 29 ft·lbf)

(d) Install the air intake chamber stay with the 2 bolts.
Torque: 19.5 N·m (200 kgf·cm, 14 ft·lbf)

(e) Connect the PCV hose to the PCV valve on the RH cylinder head.

(f) Connect the ground strap and cable to the intake air control valve for the ACIS.

(g) Connect the ground cable and strap with the nut.
Torque: 14.5 N·m (145 kgf·cm, 10 ft·lbf)

(h) Connect the ground cable to the air intake chamber.

(i) Connect the brake booster vacuum hose to the air intake chamber.

(j) Connect the 2 water bypass hoses to the throttle body.

(k) Connect the air assist hose to the throttle body.

(l) Connect the purge hose to the emission control valve set.

(m) Connect the 2 vacuum hoses to the vacuum tank for the ACIS.

(n) Connect the engine wire clamp to the emission control valve set.

(o) Install the PS pressure tube with the 2 nuts.

(p) Connect the throttle position sensor connector.

(q) Connect the IAC valve connector.

(r) Connect the EGR gas temperature sensor connector.

(s) Connect the EGR valve position sensor connector.

(t) Connect the VSV connector for the ACIS.

(u) Connect the VSV connecter for the EVAP.

(v) Connect the VSV connector for the EGR.

(w) Connect the DLC1 to the bracket on the intake air control valve.
(x) Connect the accelerator cable.
(y) Connect the A/T throttle cable.

31. INSTALL HIGH–TENSION CORD SET
32. INSTALL V–BANK COVER
33. INSTALL RH ENGINE MOUNTING STAY
(See page EM–76)
34. INSTALL AIR FILTER AND AIR CLEANER CAP ASSEMBLY
35. INSTALL RH FENDER APRON SEAL
36. INSTALL FRONT EXHAUST PIPE
(See page EM–76)
37. FILL WITH ENGINE COOLANT
38. START ENGINE AND CHECK FOR LEAKS
39. VEHICLE ROAD TEST

Check for abnormal noise, shock, slippage, correct shift points and smoothly operation.

40. RECHECK ENGINE COOLANT LEVEL

ENGINE UNIT

COMPONENTS

EM04X–04

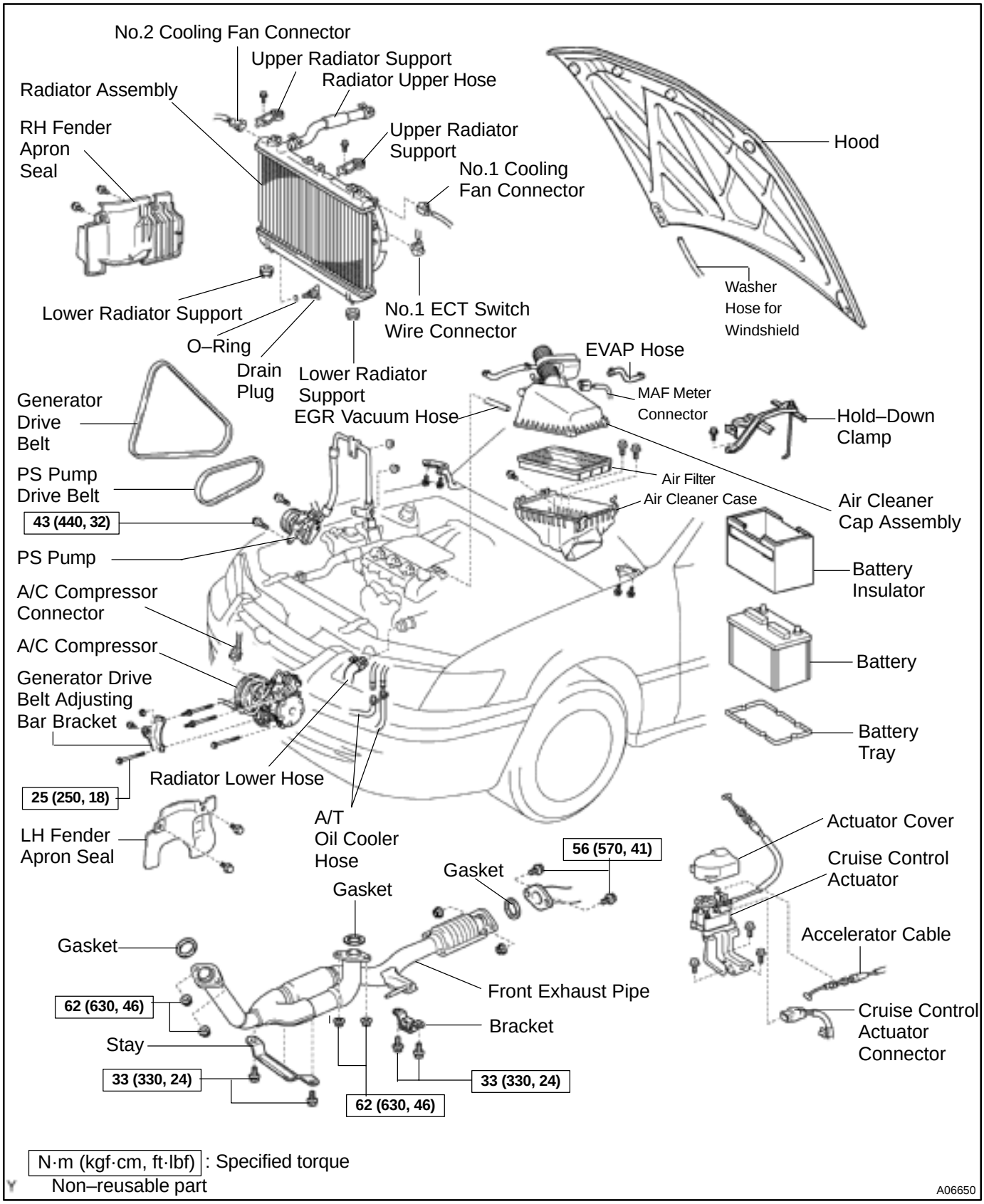

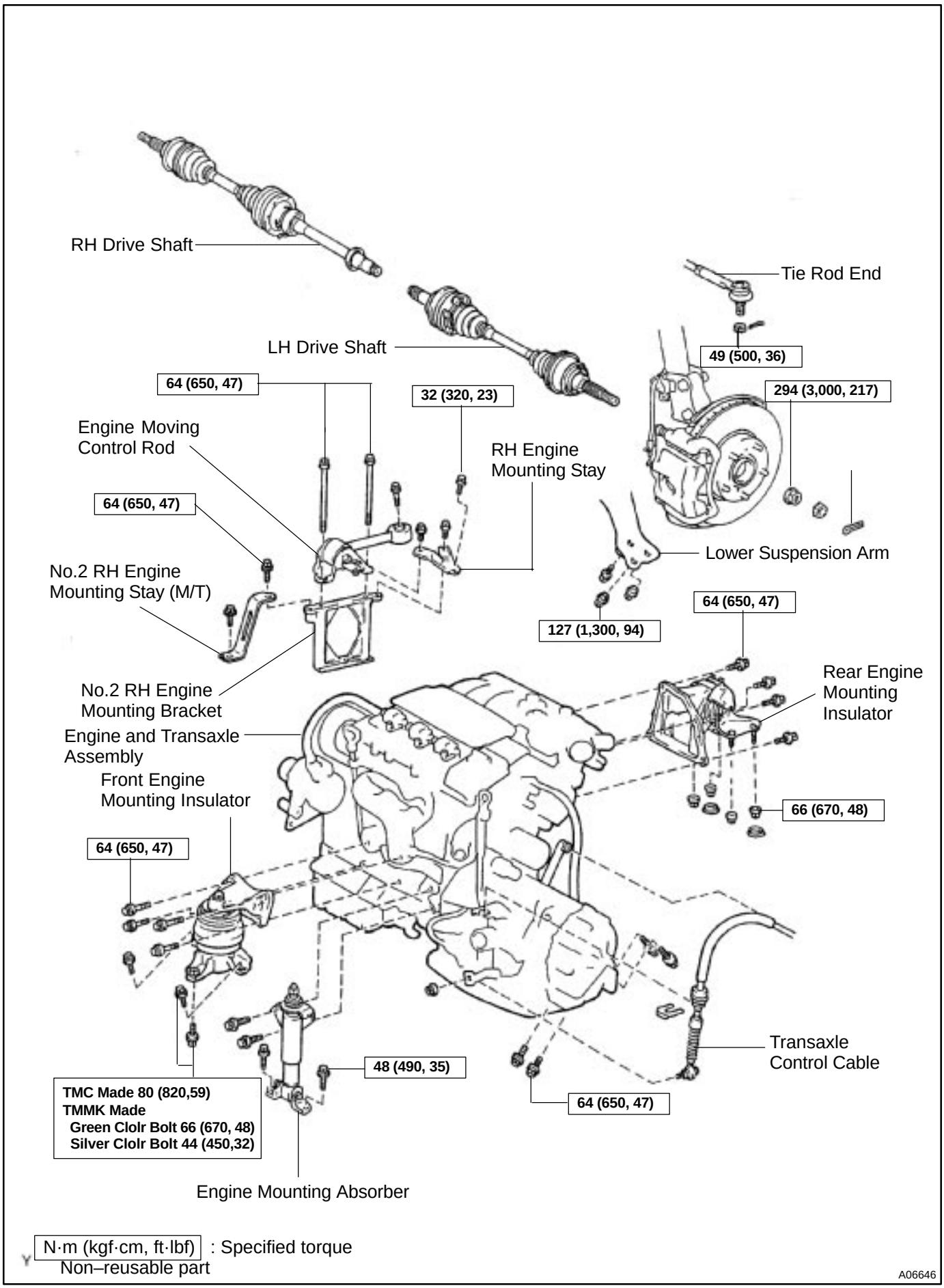
RH Drive Shaft
LH Drive Shaft
Tie Rod End
49 (500, 36)
294 (3,000, 217)
64 (650, 47)
32 (320, 23)
Engine Moving Control Rod
RH Engine Mounting Stay
64 (650, 47)
Lower Suspension Arm
No.2 RH Engine Mounting Stay (M/T)
127 (1,300, 94)
64 (650, 47)
Rear Engine Mounting Insulator
No.2 RH Engine Mounting Bracket
Engine and Transaxle Assembly
Front Engine Mounting Insulator
66 (670, 48)
64 (650, 47)
Transaxle Control Cable
48 (490, 35)
TMC Made 80 (820,59)
TMMK Made
Green Clolr Bolt 66 (670, 48)
Silver Clolr Bolt 44 (450,32)
64 (650, 47)
Engine Mounting Absorber
N·m (kgf·cm, ft·lbf) : Specified torque
Non–reusable part
A06646

EM04Y–03

REMOVAL

1. REMOVE BATTERY AND TRAY
2. REMOVE HOOD
3. REMOVE ENGINE FENDER APRON SEALS
4. DRAIN ENGINE COOLANT
5. DRAIN ENGINE OIL
6. DISCONNECT ACCELERATOR CABLE
7. REMOVE AIR CLEANER CAP ASSEMBLY AND AIR CLEANER CASE
8. REMOVE CRUISE CONTROL ACTUATOR
9. REMOVE RADIATOR (See page CO–18)

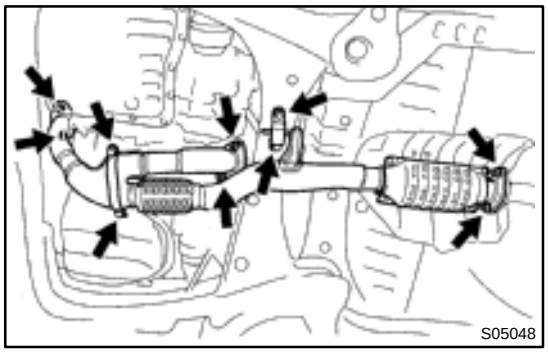
S05048

10. REMOVE FRONT EXHAUST PIPE

(a) Remove the 2 bolts holding the support stay to the support bracket.
(b) Remove the 2 bolts holding the support bracket to the front frame.
(c) Remove the 2 bolts and 2 nuts holding the front exhaust pipe to the center exhaust pipe.
(d) Remove the 4 nuts holding the front exhaust pipe to the exhaust manifolds.
(e) Remove the front exhaust pipe and 3 gaskets.

11. DISCONNECT CONNECTORS, CABLE, CLAMPS AND HOSES

(a) Disconnect the igniter connector on the LH fender apron.
(b) Disconnect the noise filter connector on the LH fender apron.
(c) Disconnect the generator wire and connector.
(d) Disconnect the starter wire and connector.
(e) Disconnect the 2 ground strap connectors from the LH fender apron.
(f) Disconnect the 2 ground strap connectors from the RH fender apron.
(g) Disconnect the ground cable from the battery body bracket.
(h) Disconnect the engine wire protector clamp from the battery body bracket.
(i) Disconnect the engine wire clamp from the bracket on the RH fender apron.
(j) Disconnect the engine wire clamp from the bracket on the fuel filter.

(k) Disconnect the brake booster vacuum hose from the air intake chamber.
(l) Disconnect the engine coolant reservoir hose from the water outlet.
(m) Disconnect the heater hose from the intake manifold.
(n) Disconnect the heater hose from the water inlet housing.
(o) Disconnect the fuel inlet hose from the fuel filter.

CAUTION:
Perform disconnecting operation of the fuel tube connector (quick type) after observing the precautions.
(See page SF–6)

(p) Disconnect the purge hose from the pipe on the emission control valve set.
(q) Disconnect the 2 vacuum hoses from the vacuum tank for the ACIS.

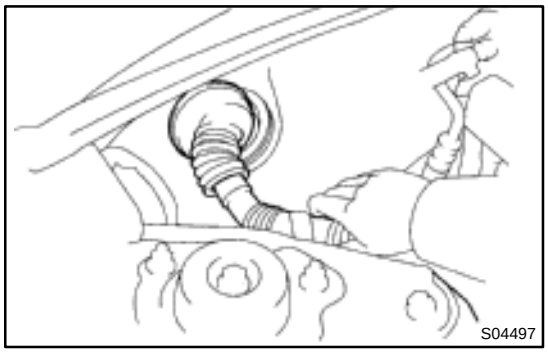
S04497

12. DISCONNECT ENGINE WIRE FROM CABIN

(a) Remove the No.2 instrument lower panel.
(b) Disconnect the 3 ECM connectors.
(c) Disconnect the 3 cowl wire connectors from the connectors on the bracket.
(d) Disconnect the grommet from the cowl panel, and pull out the engine wire.

13. REMOVE DRIVE SHAFTS (See page SA–26)

14. M/T only:
REMOVE STARTER (See page ST–5)

15. M/T only:
DISCONNECT CLUTCH RELEASE CYLINDER AND ACCUMULATOR WITHOUT DISCONNECTING TUBE

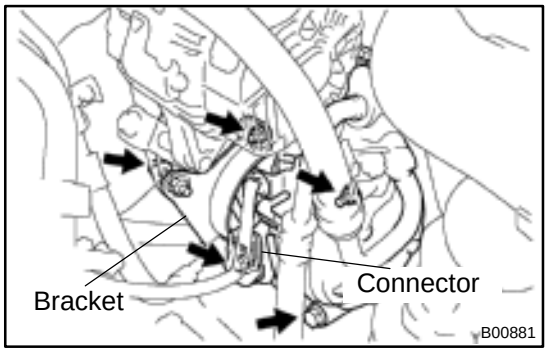

16. DISCONNECT A/C COMPRESSOR FROM ENGINE

(a) Disconnect the A/C compressor connector.
(b) Remove the drive belt.
(c) Remove the 4 bolts, nut and drive belt adjusting bar bracket.
(d) Disconnect the A/C compressor from the engine.

17. DISCONNECT TRANSAXLE CONTROL CABLE(S) FROM TRANSAXLE

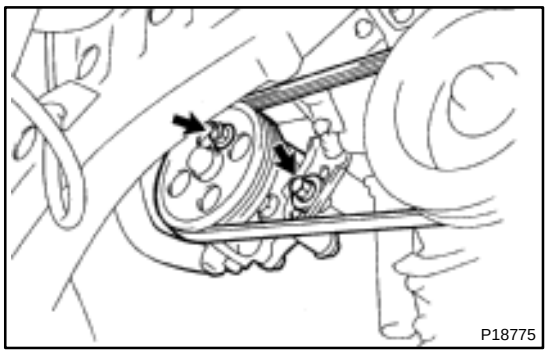

18. DISCONNECT PS PUMP FROM ENGINE

(a) Remove the 2 nuts, and disconnect the PS pressure tube from the No.1 engine hanger.

(b) Loosen the 2 bolts, and remove the drive belt.

(c) Remove the 2 bolts, and disconnect the PS pump from the engine.

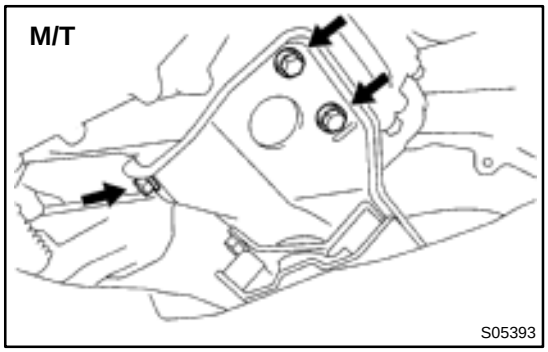

19. DISCONNECT TRANSAXLE FROM LH ENGINE MOUNTING INSULATOR

(a) M/T:
Remove the 3 bolts holding the transaxle to the mounting insulator.

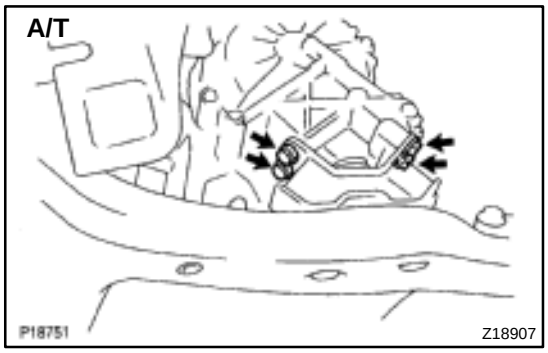

(b) A/T:
Remove the 4 bolts holding the transaxle to the mounting insulator.

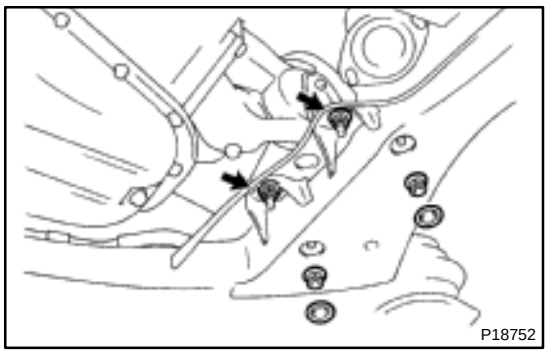

20. DISCONNECT REAR ENGINE MOUNTING BRACKET FROM FRONT FRAME

(a) Remove the 2 hole plugs.

(b) Remove the 4 nuts holding the front frame to the mounting bracket.

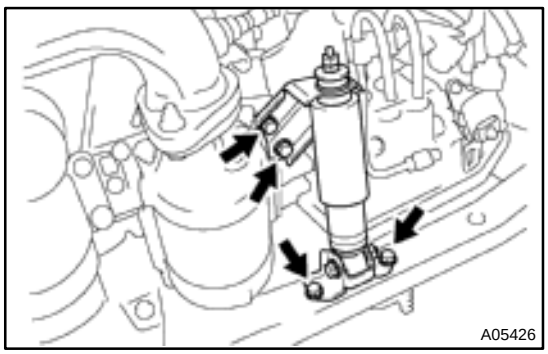

21. REMOVE ENGINE MOUNTING ABSORBER

Remove the 4 bolts and mounting absorber.

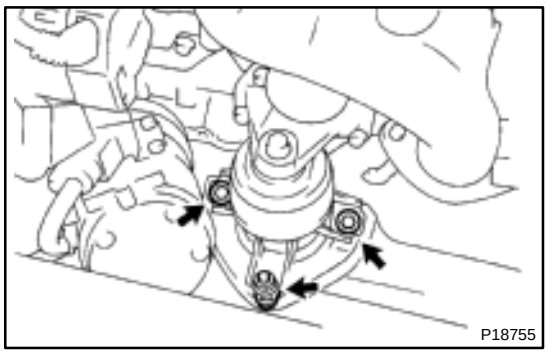

22. DISCONNECT FRONT ENGINE MOUNTING INSULATOR FROM FRONT FRAME

Remove the 3 bolts holding the mounting insulator to the front frame.

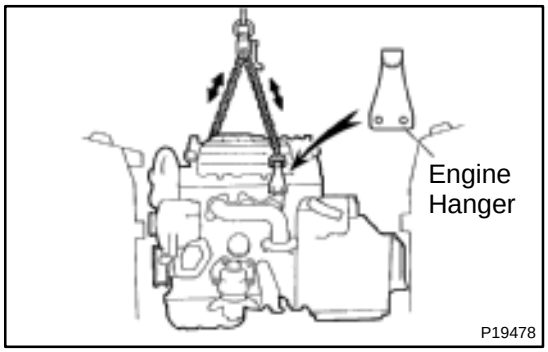

23. ATTACH ENGINE SLING DEVICE TO ENGINE HANGERS

(a) Install the No.2 engine hanger in the correct direction.

Part No.:

No.2 engine hanger	12282–20020
Bolt	91621–60822

Torque: 19.5 N·m (200 kgf·cm, 14 ft·lbf)

(b) Attach the sling device to the engine hangers.

CAUTION:

Do not attempt to hang the engine by hooking the chain to any other part.

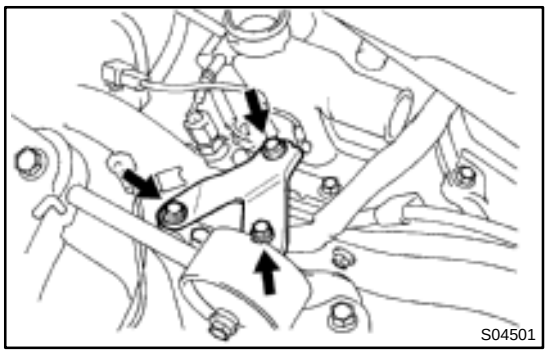

24. REMOVE RH ENGINE MOUNTING STAY

Remove the 3 bolts and RH engine mounting stay.

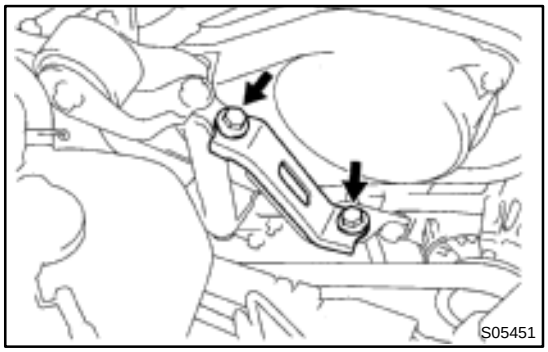

25. M/T only:
REMOVE NO.2 RH ENGINE MOUNTING STAY

Remove the 2 bolts and No.2 RH engine mounting stay.

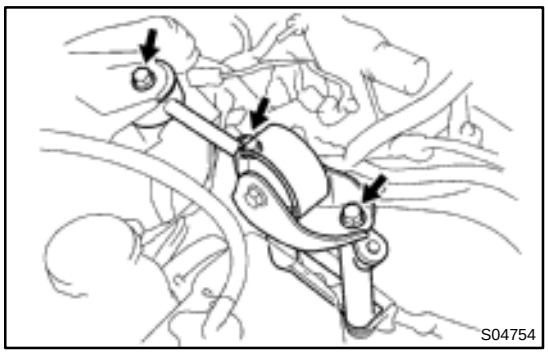

26. REMOVE ENGINE MOVING CONTROL ROD AND NO.2 RH ENGINE MOUNTING BRACKET

Remove the 3 bolts, control rod and mounting bracket.

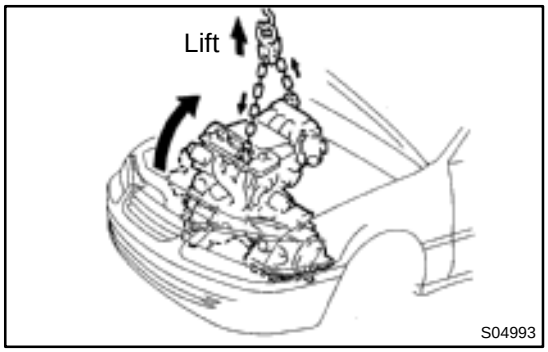

27. REMOVE ENGINE AND TRANSAXLE ASSEMBLY FROM VEHICLE

(a) Lift the engine out of the vehicle slowly and carefully.

NOTICE:

Be careful not to hit the PNP switch.
Make sure the engine is clear of all wiring, hoses and cables.

(b) Place the engine and transaxle assembly onto the stand.

28. REMOVE FRONT ENGINE MOUNTING INSULATOR FROM ENGINE

Remove the 4 bolts and mounting insulator.

29. REMOVE REAR ENGINE MOUNTING INSULATOR AND BRACKET ASSEMBLY FROM ENGINE

Remove the 4 bolts, the mounting insulator and bracket assembly.

30. SEPARATE ENGINE AND TRANSAXLE

E153 M/T (See page MX–4)
A541E A/T (See page AX–23)

EM04Z–04

INSTALLATION

1. ASSEMBLE ENGINE AND TRANSAXLE

E153 M/T (See page MX–4)

A541E A/T (See page AX–23)

2. INSTALL REAR ENGINE MOUNTING INSULATOR

Install the mounting insulator with the 4 bolts.

Torque: 64 N·m (650 kgf·cm, 47 ft·lbf)

3. INSTALL FRONT ENGINE MOUNTING INSULATOR

Install the mounting insulator with the 4 bolts.

Torque: 64 N·m (650 kgf·cm, 47 ft·lbf)

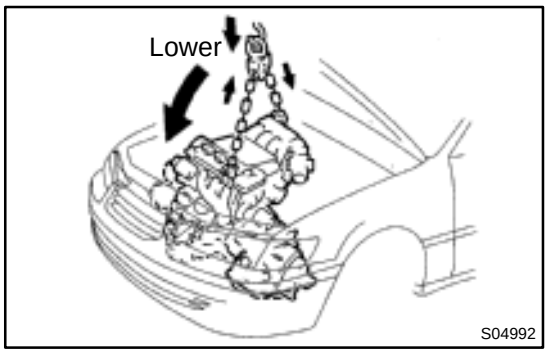

4. INSTALL ENGINE AND TRANSAXLE ASSEMBLY IN VEHICLE

(a) Attach the engine sling device to the engine hangers.

(b) Lower the engine into the engine compartment.

Tilt the transaxle downward, lower the engine and clear the LH mounting.

NOTICE:

Be careful not to hit the park/neutral position switch.

(c) Keep the engine level, and align RH and LH mountings with the body bracket.

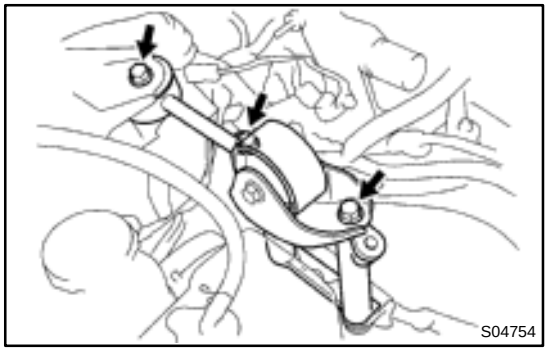

5. INSTALL NO.2 RH ENGINE MOUNTING BRACKET AND ENGINE MOVING CONTROL ROD

Install the mounting moving control rod and No.2 RH engine mounting bracket with the 3 bolts.

Torque: 64 N·m (650 kgf·cm, 47 ft·lbf)

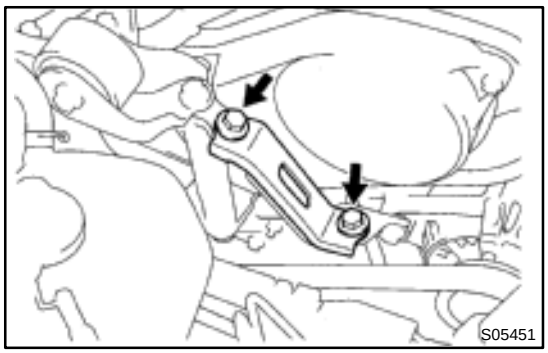

6. M/T only:

INSTALL NO.2 RH ENGINE MOUNTING STAY

Install the No.2 RH engine mounting stay with the 2 bolts.

Torque: 64 N·m (650 kgf·cm, 47 ft·lbf)

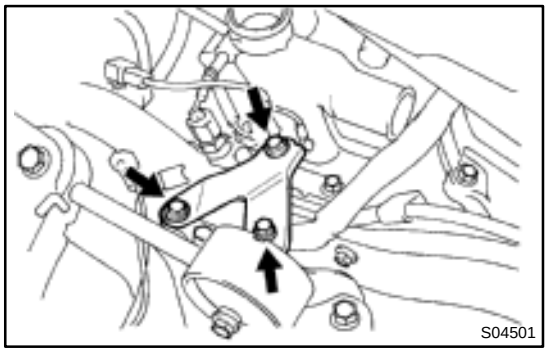

7. INSTALL RH ENGINE MOUNTING STAY

Install the RH mounting stay with the 3 bolts.

Torque: 32 N·m (320 kgf·cm, 23 ft·lbf)

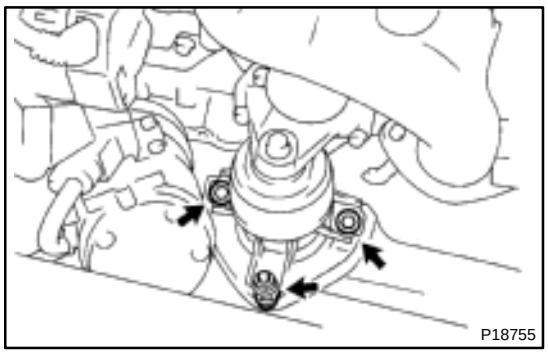

8. CONNECT FRONT ENGINE MOUNTING INSULATOR

Connect the mounting insulator with the 3 bolts.

Torque:
TMC made: 80 N·m (820 kgf·cm, 59 ft·lbf)
TMMK made:
44 N·m (450 kgf·cm, 32 ft·lbf) for silver color bolt
66 N·m (670 kgf·cm, 48 ft·lbf) for green color bolt

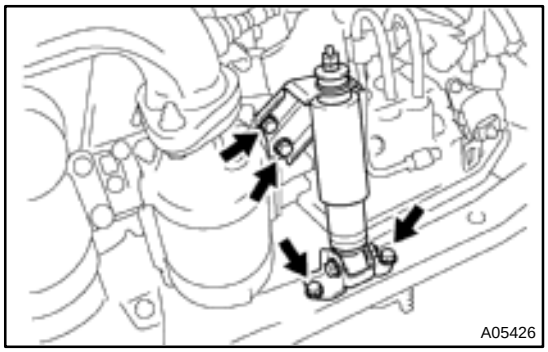

9. INSTALL ENGINE MOUNTING ABSORBER

Install the engine mounting absorber with the 4 bolts.

Torque: 48 N·m (490 kgf·cm, 35 ft·lbf)

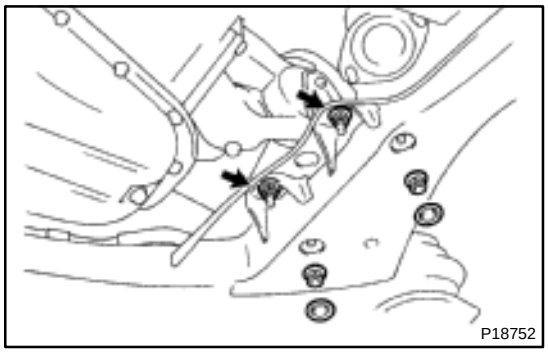

10. CONNECT REAR ENGINE MOUNTING INSULATOR

(a) Connect the mounting insulator with the 4 nuts.
Torque: 66 N·m (670 kgf·cm, 48 ft·lbf)

(b) Install the 2 hole plugs.

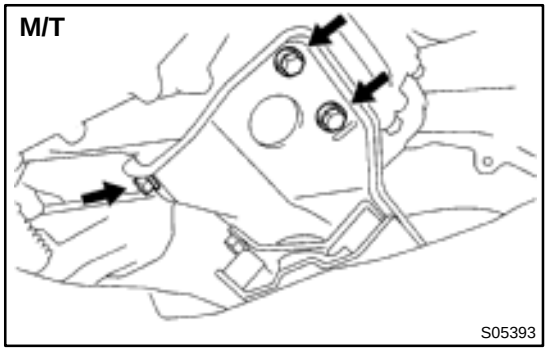

11. CONNECT LH ENGINE MOUNTING INSULATOR

(a) M/T:
Connect the mounting insulator with the 3 bolts.
Torque: 64 N·m (650 kgf·cm, 47 ft·lbf)

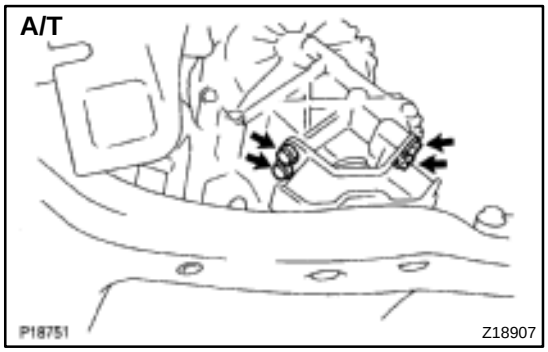

(b) A/T:
Connect the mounting insulator with the 4 bolts.
Torque: 64 N·m (650 kgf·cm, 47 ft·lbf)

12. REMOVE ENGINE SLING DEVICE

13. CONNECT TRANSAXLE CONTROL CABLE(S) TO TRANSAXLE

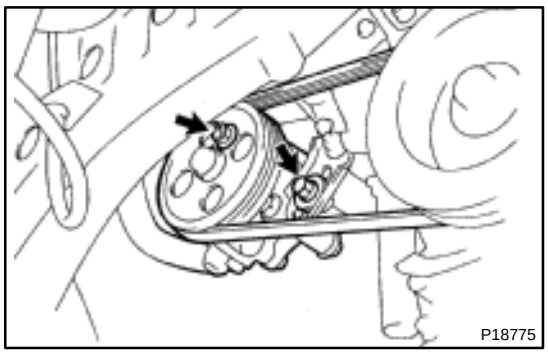

14. INSTALL PS PUMP

(a) Install the PS pump with the 2 bolts.
Torque: 43 N·m (440 kgf·cm, 31 ft·lbf)

(b) Install the drive belt.

(c) Connect the PS pressure tube with the 2 nuts.

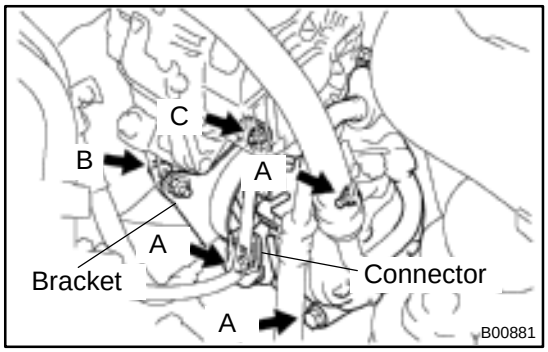

15. INSTALL A/C COMPRESSOR

(a) Install the A/C compressor and drive belt adjusting bar bracket with the 4 bolts and nut.
Torque:
Bolt A: 25 N·m (250 kgf·cm, 18 ft·lbf)
Bolt B: 18 N·m (185 kgf·cm, 13 ft·lbf)
Nut C: 25 N·m (250 kgf·cm, 18 ft·lbf)

(b) Install the drive belt.

(c) Connect the A/C compressor connector.

16. M/T only:
INSTALL CLUTCH RELEASE CYLINDER AND ACCUMULATOR

17. M/T only:
INSTALL STARTER (See page ST–19)

18. INSTALL DRIVE SHAFTS (See page SA–32)

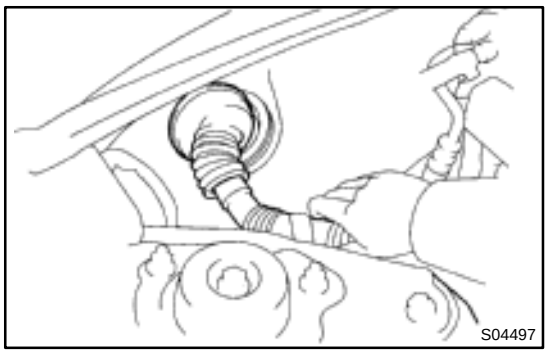

19. CONNECT ENGINE WIRE TO CABIN

(a) Push in the engine wire through the cowl panel. Install the grommet.

(b) Connect the 3 engine ECM connectors.

(c) Connect the 3 cowl wire connectors to the connectors on the bracket.

(d) Install the No.2 instrument lower panel.

20. CONNECT CONNECTORS, CABLE, CLAMPS AND HOSES

(a) Connect the igniter connector on the LH fender apron.

(b) Connect the noise filter connector on the LH fender apron.

(c) Connect the generator connector and wire.

(d) Connect the starter connector and wire.

(e) Connect the 2 ground strap connectors to the RH fender apron.

(f) Connect the 2 ground strap connectors to the LH fender apron.
(g) Connect the DLC1 to the RH fender apron.
(h) Connect the ground cable to the battery body bracket.
(i) Connect the engine wire protector clamp to the battery body bracket.
(j) Connect the engine wire clamp to the bracket on the RH fender apron.
(k) Connect the engine wire clamp to the bracket on the fuel filter.
(l) Connect the brake booster vacuum hose to the air intake chamber.
(m) Connect the engine coolant reservoir hose to the water outlet.
(n) Connect the heater hose to the intake manifold.
(o) Connect the heater hose to the water inlet housing.
(p) Connect the fuel inlet hose to the fuel filter.

CAUTION:
Perform connecting operations of the fuel tube connector (quick type) after observing the precautions.
(See page SF–6)

(q) Connect the purge hose to the pipe on the emission control valve set.
(r) Connect the 2 vacuum hoses to the vacuum tank for the ACIS.

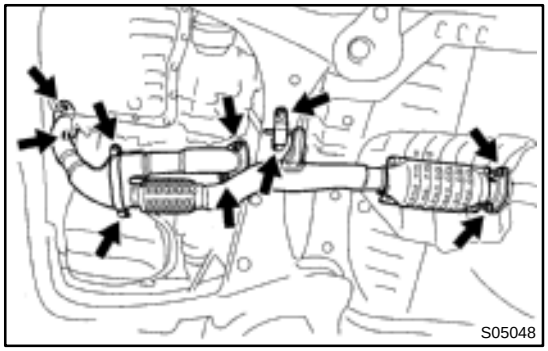
S05048

21. INSTALL FRONT EXHAUST PIPE
(a) Temporarily install 3 new gaskets and the front exhaust pipe with the 2 bolts and 6 nuts.
(b) Tighten the 4 nuts holding the exhaust manifolds to the front exhaust pipe.
Torque: 62 N·m (630 kgf·cm, 46 ft·lbf)
(c) Tighten the 2 bolts and 2 nuts holding the front exhaust pipe to the center exhaust pipe.
Torque: 56 N·m (570 kgf·cm, 41 ft·lbf)
(d) Install the bracket with the 2 bolts.
Torque: 33 N·m (330 kgf·cm, 24 ft·lbf)
(e) Install the support stay with the 2 bolts.
Torque: 33 N·m (330 kgf·cm, 24 ft·lbf)
22. INSTALL RADIATOR (See page CO–24)
23. INSTALL CRUISE CONTROL ACTUATOR
24. INSTALL AIR CLEANER CAP ASSEMBLY AND AIR CLEANER CASE
25. CONNECT ACCELERATOR CABLE
26. INSTALL ENGINE FENDER APRON SEALS
27. INSTALL BATTERY TRAY AND BATTERY

28. INSTALL HOOD

29. FILL ENGINE WITH OIL

30. FILL WITH ENGINE COOLANT

31. START ENGINE AND CHECK FOR LEAKS

32. PERFORM ROAD TEST

Check for abnormal noise, shock, slippage, correct shift points and smooth operation.

33. RECHECK ENGINE COOLANT AND OIL LEVELS

CYLINDER BLOCK

COMPONENTS

EM050–03

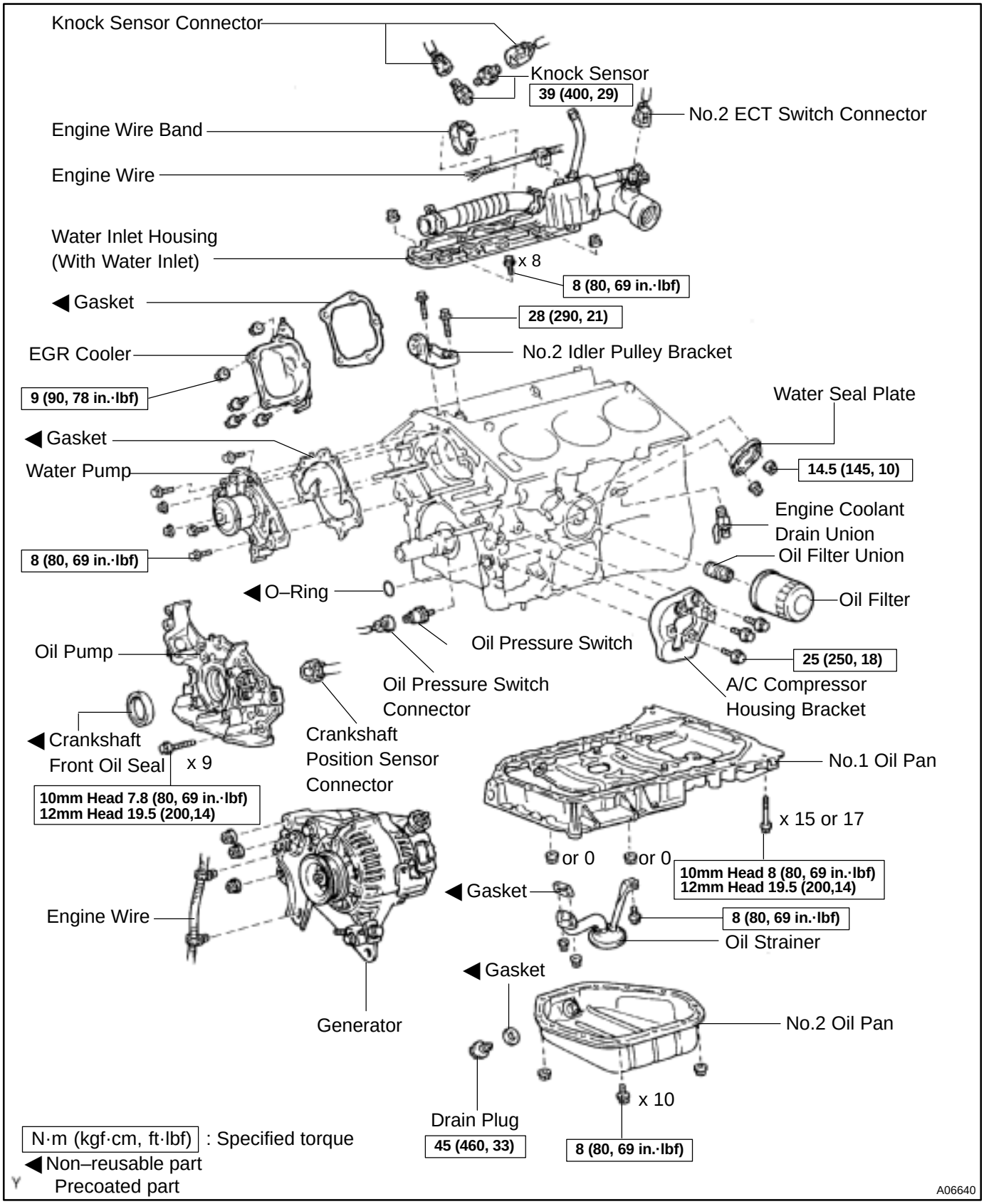

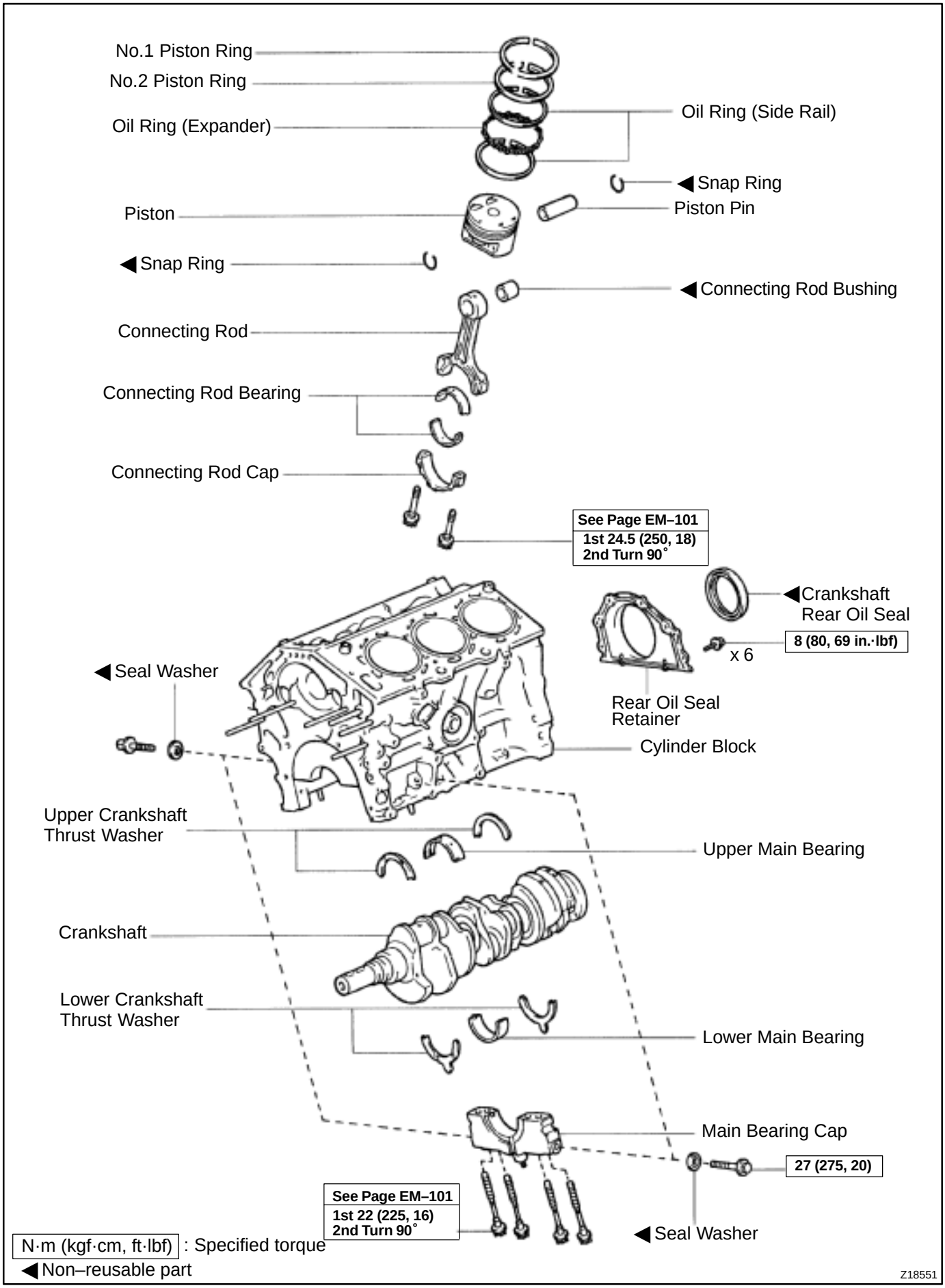
No.1 Piston Ring
No.2 Piston Ring
Oil Ring (Expander)
Oil Ring (Side Rail)
◀ Snap Ring
Piston
Piston Pin
◀ Snap Ring
◀ Connecting Rod Bushing
Connecting Rod
Connecting Rod Bearing
Connecting Rod Cap
See Page EM–101
1st 24.5 (250, 18)
2nd Turn 90°
◀ Crankshaft Rear Oil Seal
8 (80, 69 in.·lbf)
x 6
◀ Seal Washer
Rear Oil Seal Retainer
Cylinder Block
Upper Crankshaft Thrust Washer
Upper Main Bearing
Crankshaft
Lower Crankshaft Thrust Washer
Lower Main Bearing
Main Bearing Cap
27 (275, 20)
See Page EM–101
1st 22 (225, 16)
2nd Turn 90°
◀ Seal Washer
N·m (kgf·cm, ft·lbf) : Specified torque
◀ Non–reusable part
Z18551

EM051–04

DISASSEMBLY

1. M/T:
REMOVE FLYWHEEL

2. A/T:
REMOVE DRIVE PLATE

3. INSTALL ENGINE TO ENGINE STAND FOR DISASSEMBLY

4. REMOVE TIMING BELT AND PULLEYS
(See page EM–15)

5. REMOVE CYLINDER HEAD (See page EM–32)

6. REMOVE GENERATOR, ADJUSTING BAR AND BRACKET ASSEMBLY

(a) Disconnect the 2 wire clamps from the wire brackets.

(b) Remove the 3 nuts, the generator, adjusting bar and bracket assembly.

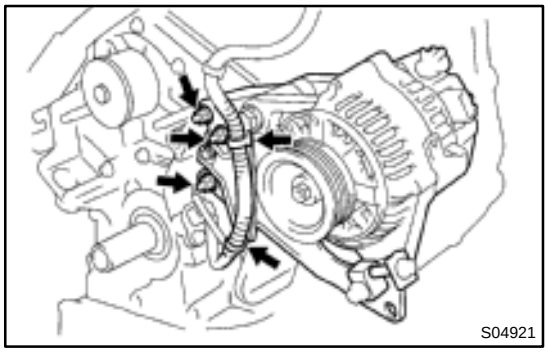
S04921

7. REMOVE OIL PRESSURE SWITCH
(See page LU–1)

8. REMOVE A/C COMPRESSOR HOUSING BRACKET

Remove the 3 bolts and compressor housing bracket.

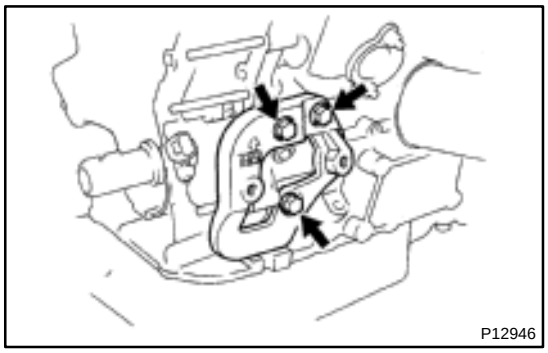
P12946

9. REMOVE NO.2 IDLER PULLEY BRACKET

Remove the 2 bolts and idler pulley bracket.

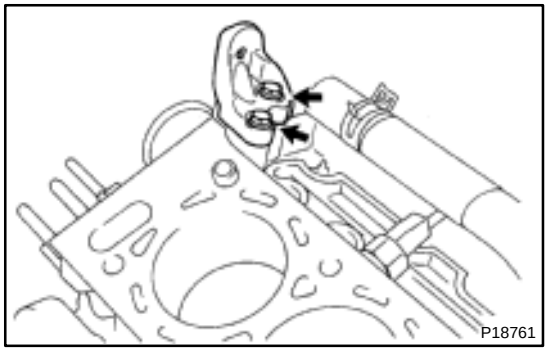
P18761

10. REMOVE KNOCK SENSORS

(a) Disconnect the 2 knock sensor connectors.

(b) Using SST, remove the 2 knock sensors.
SST 09816–30010

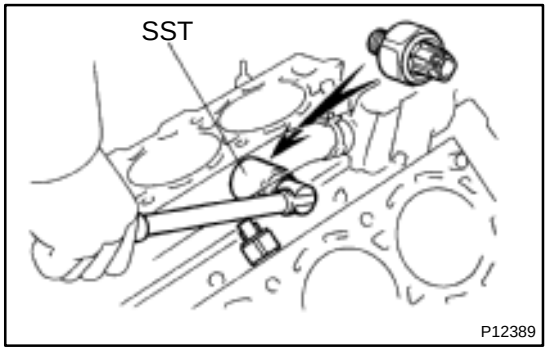

P12389

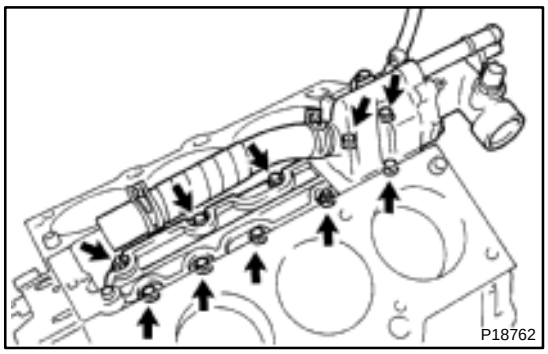

11. REMOVE WATER INLET HOUSING

(a) Remove the engine wire band.

(b) Disconnect the engine wire clamp from the bracket.

(c) Remove the 8 bolts, 2 nuts and water inlet housing.

12. REMOVE WATER PUMP (See page CO–6)

13. REMOVE NO.2 OIL PAN (See page LU–9)

14. REMOVE OIL STRAINER (See page LU–9)

15. REMOVE NO.1 OIL PAN (See page LU–9)

16. REMOVE OIL PUMP (See page LU–9)

17. REMOVE OIL FILTER (See page LU–9)

18. REMOVE OIL FILTER UNION

Using a 12 mm hexagon wrench, remove the oil filter union.

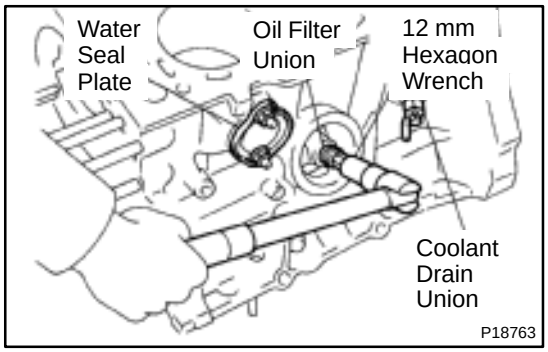

19. REMOVE WATER SEAL PLATE

Remove the 2 nuts and seal plate.

20. REMOVE ENGINE COOLANT DRAIN UNION

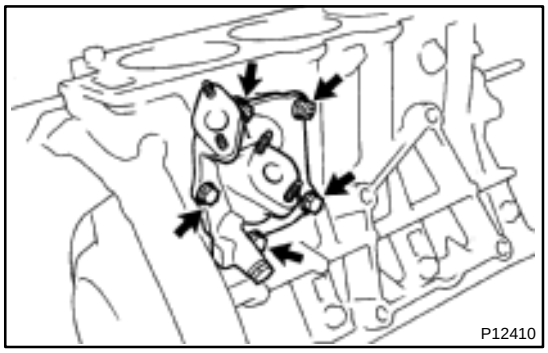

21. REMOVE EGR COOLER

Remove the 3 bolts, 2 nuts, EGR cooler and gasket.

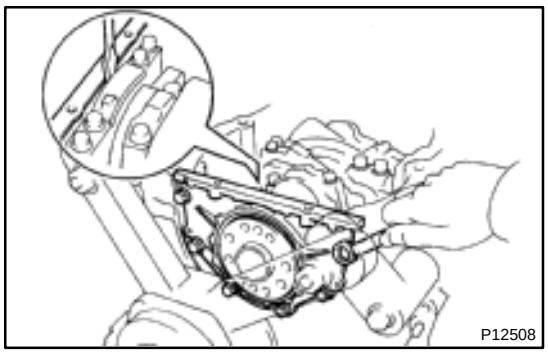

22. REMOVE REAR OIL SEAL RETAINER

(a) Remove the 6 bolts.

(b) Using a screwdriver, remove the oil seal retainer by prying the portions between the oil seal retainer and main bearing cap.

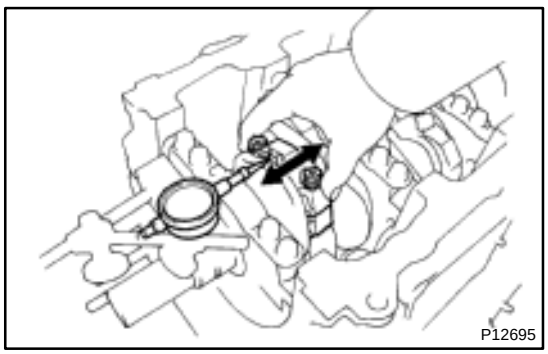

23. CHECK CONNECTING ROD THRUST CLEARANCE

Using a dial indicator, measure the thrust clearance while moving the connecting rod back and forth.

Standard thrust clearance:
0.15 – 0.30 mm (0.0059 – 0.0118 in.)
Maximum thrust clearance: 0.35 mm (0.0138 in.)

If the thrust clearance is greater than maximum, replace the connecting rod assembly(s). If necessary, replace the crankshaft.

Connecting rod thickness:
20.80 – 20.85 mm (0.8189 – 0.8209 in.)

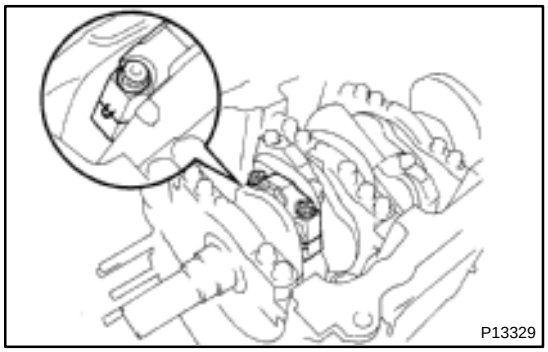

24. REMOVE CONNECTING ROD CAPS AND CHECK OIL CLEARANCE

(a) Check the matchmarks on the connecting rod and cap are aligned to ensure correct reassembly.

(b) Remove the 2 connecting rod cap bolts.

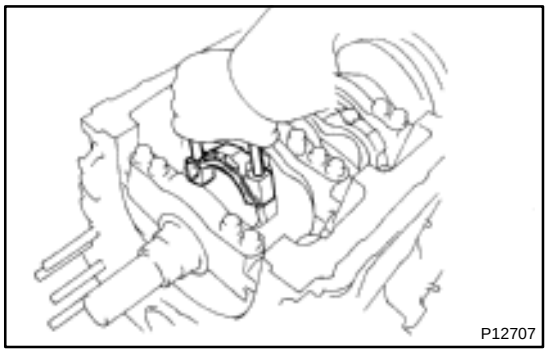

(c) Using the 2 removed connecting rod cap bolts, remove the connecting rod cap and lower bearing by wiggling the connecting rod cap right and left.

HINT:
Keep the lower bearing inserted with the connecting rod cap.

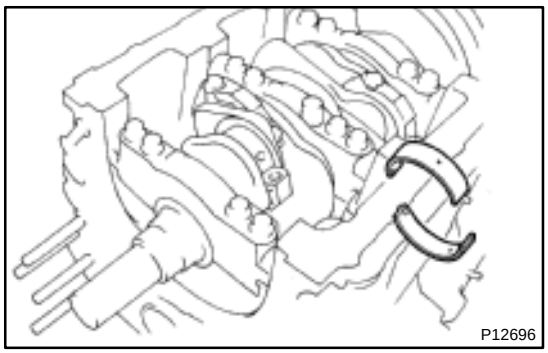

(d) Clean the crank pin and bearing.

(e) Check the crank pin and bearing for pitting and scratches.

If the crank pin or bearing is damaged, replace the bearings. If necessary, replace the crankshaft.

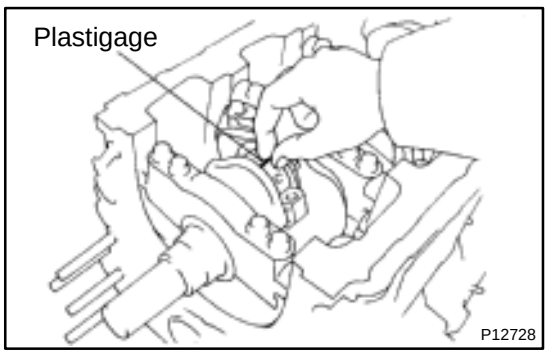

(f) Lay a strip of Plastigage across the crank pin.

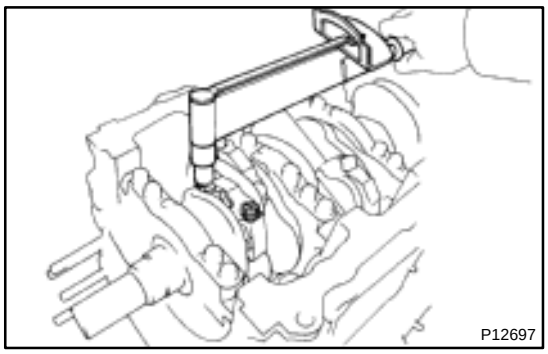

(g) Install the connecting rod cap with the 2 bolts.
(See page EM–101)
Torque:
1st: 24.5 N·m (250 kgf·cm, 18 ft·lbf)
2nd: Turn extra 90°

NOTICE:
Do not turn the crankshaft.

(h) Remove the 2 bolts, connecting rod cap and lower bearing. (See steps (b) and (c))

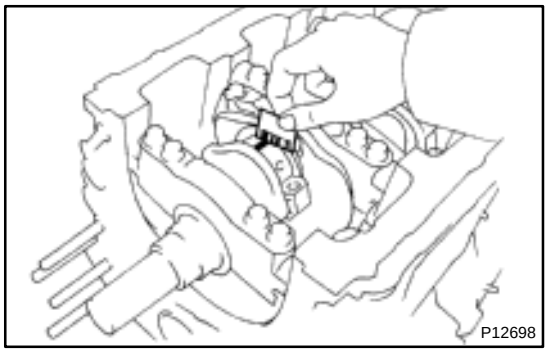

(i) Measure the Plastigage at its widest point.
Standard oil clearance:
0.038 – 0.064 mm (0.0015 – 0.0025 in.)
Maximum oil clearance: 0.08 mm (0.0031 in.)

If the oil clearance is greater than maximum, replace the bearings. If necessary, grind or replace the crankshaft.

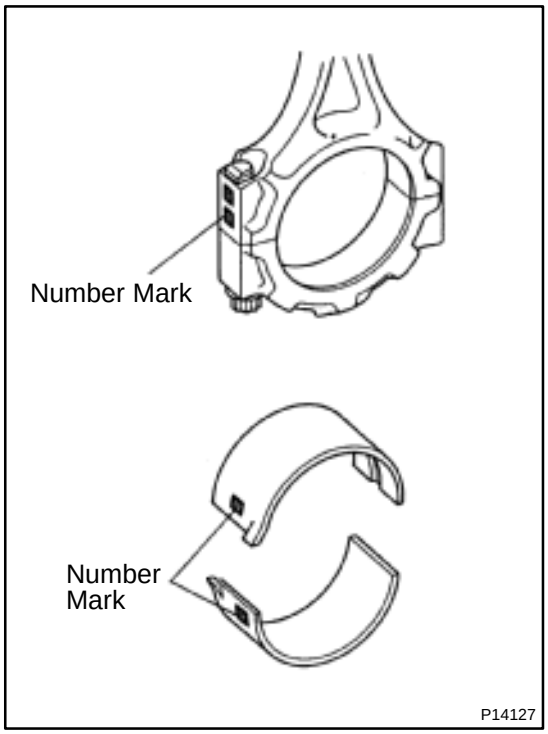

HINT:
If replacing a bearing, replace it with one having the same number as marked on the connecting rod. There are 4 sizes of standard bearings, marked ”1”, ”2”, ”3” and ”4” accordingly.

Reference:
Standard bearing center wall thickness:

Mark	mm (in.)
”1”	1.484 – 1.487 (0.0584 – 0.0585)
”2”	1.487 – 1.490 (0.0585 – 0.0587)
”3”	1.490 – 1.493 (0.0587 – 0.0588)
”4”	1.493 – 1.496 (0.0588 – 0.0589)

(j) Completely remove the Plastigage.

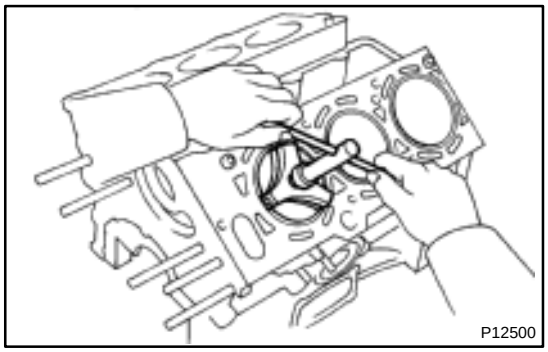

25. REMOVE PISTON AND CONNECTING ROD ASSEMBLIES

(a) Using a ridge reamer, remove all the carbon from the top of the cylinder.

(b) Push the piston, connecting rod assembly and upper bearing through the top of the cylinder block.

HINT:
Keep the bearings, connecting rod and cap together.
Arrange the piston and connecting rod assemblies in the correct order.

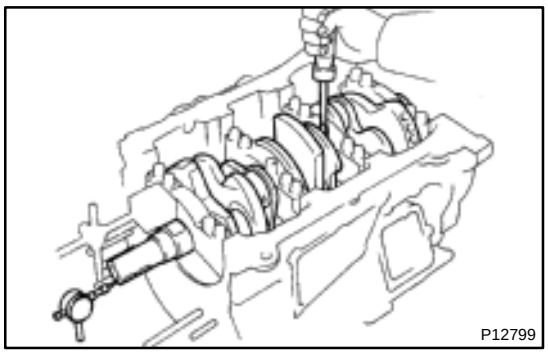
P12799

26. CHECK CRANKSHAFT THRUST CLEARANCE

Using a dial indicator, measure the thrust clearance while prying the crankshaft back and forth with a screwdriver.

Standard thrust clearance:
0.04 – 0.24 mm (0.0016 – 0.0095 in.)
Maximum thrust clearance: 0.30 mm (0.0118 in.)

If the thrust clearance is greater than maximum, replace the thrust washers as a set.

Thrust washer thickness:
1.930 – 1.980 mm (0.0760 – 0.0780 in.)

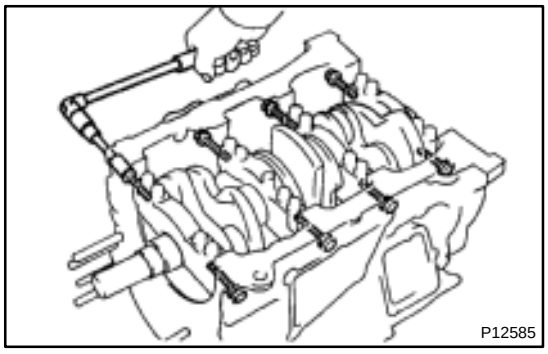
P12585

27. REMOVE MAIN BEARING CAPS AND CHECK OIL CLEARANCE

(a) Uniformly loosen and remove the 8 main bearing cap bolts and seal washers, in the several passes, in the sequence shown.

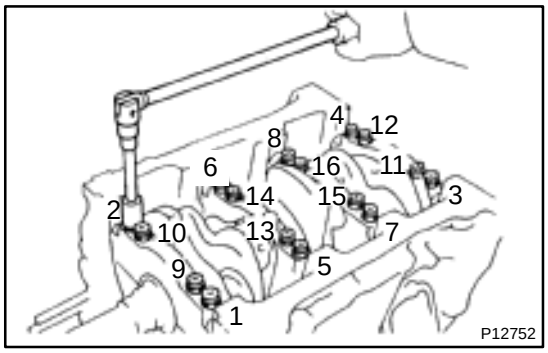

P12752

(b) Uniformly loosen and remove the 16 main bearing cap bolts, in several passes, in the sequence shown.

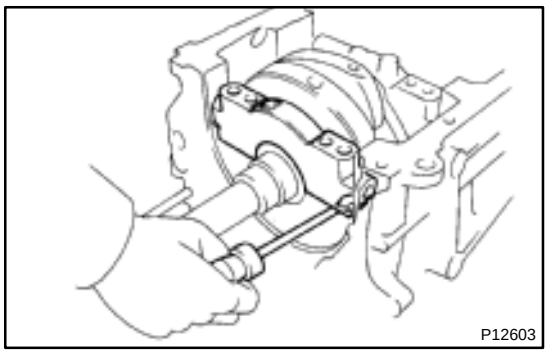
P12603

(c) Using a screwdriver, pry out main bearing caps. Remove the 4 main bearing caps, lower bearings and (No.2 main bearing cap only) 2 lower thrust washers.

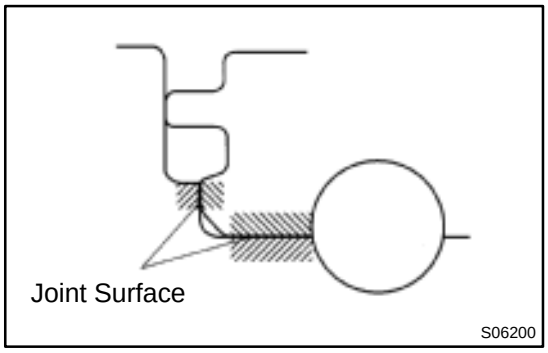

S06200

NOTICE:

Pull up the main bearing cap little by little to the right and the left by turns and pay attention not to damage the joint surface of the cylinder block and the main bearing cap.

HINT:

Keep the lower bearing and main bearing cap together. Arrange the main bearing caps and lower thrust washers in correct order.

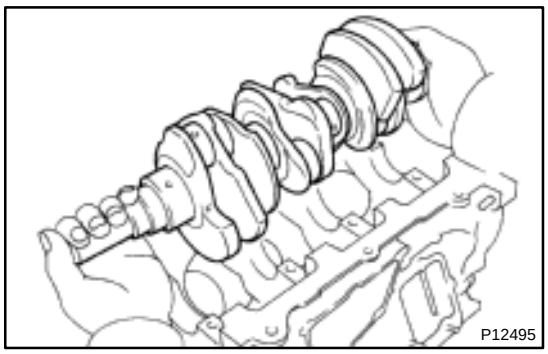
P12495

(d) Lift out the crankshaft.

HINT:

Keep the upper bearings together with the cylinder block.

(e) Clean each main journal and bearing.

(f) Check each main journal and bearing for pitting and scratches.

If the journal or bearing is damaged, replace the bearings. If necessary, replace the crankshaft.

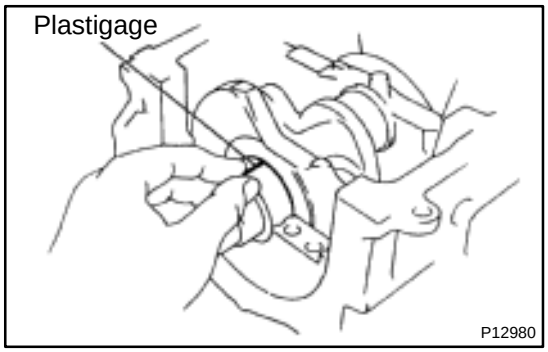

P12980

(g) Place the crankshaft on the cylinder block.

(h) Lay a strip of Plastigage across each journal.

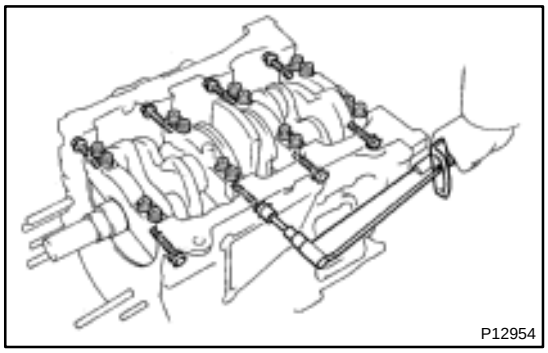
P12954

(i) Install the 4 main bearing caps. (See page EM–101)

Torque:

12 pointed head bolts:

1st: 22 N·m (225 kgf·cm, 16 ft·lbf)

2nd: Turn extra 90°

Hexagon head bolts:

27 N·m (275 kgf·cm, 20 ft·lbf)

NOTICE:

Do not turn the crankshaft.

(j) Remove the main bearing caps. (See steps (a) to (c))

(k) Measure the Plastigage at its widest point.

Standard oil clearance:

No.1 and No.4 journals	0.014 – 0.036 mm (0.0006 – 0.0014 in.)
No.2 and No.3 journals	0.026 – 0.048 mm (0.0010 – 0.0019 in.)

Maximum clearance:

No.1 and No.4 journals	0.05 mm (0.0020 in.)
No.2 and No.3 journals	0.06 mm (0.0024 in.)

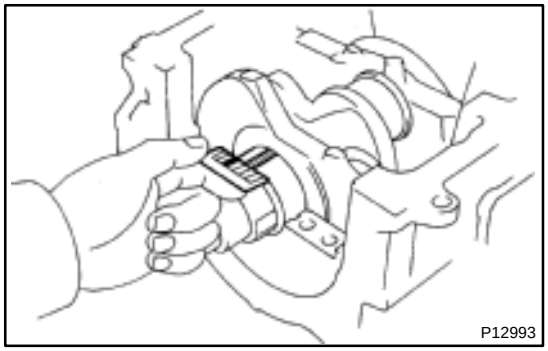
P12993

If the oil clearance is greater than maximum, replace the bearings. If necessary, replace the crankshaft.

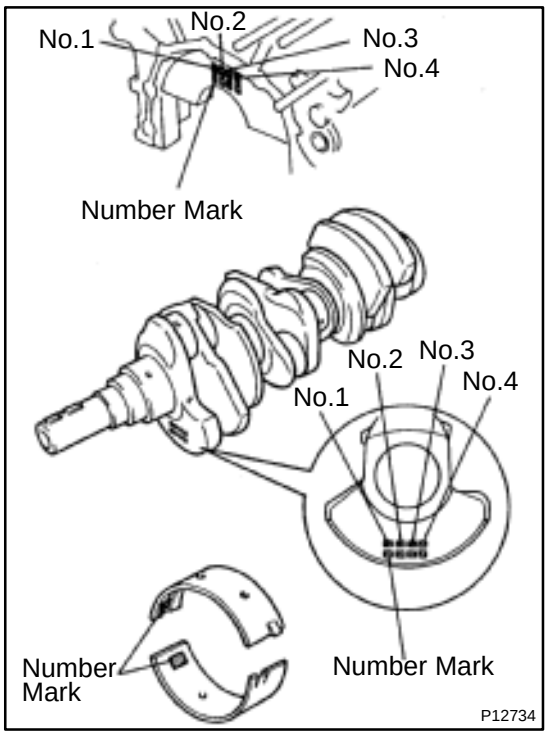

HINT:
If using a bearing, replace it with one having the same number. If the number of the bearing cannot be determined, select the correct bearing by adding together the numbers imprinted on the cylinder block and crankshaft, then refer to the table below for the appropriate bearing number. The No.1 and No.4 journal bearings have 5 standard bearing sizes, marked ”3”, ”4”, ”5”, ”6” and ”7” accordingly. The No.2 and No.3 journal bearings have 5 standard bearing sizes, marked ”1”, ”2”, ”3”, ”4” and ”5” accordingly.

No.1 and No.4 journal bearings

	Total number				” ”: Number mark
Cylinder block (A) + Crankshaft (B)	0 – 5	6 – 11	12 – 17	18 – 23	24 – 28
Use bearing	”3”	”4”	”5”	”6”	”7”

EXAMPLE: Cylinder block ”06” (A)
+ Crankshaft ”08” (B)
= Total number 14 (Use bearing ”5”)

No.1 and No.4 journal standard bearings selection chart

Crankshaft number mark	Cylinder block number mark																
	00	01	02	03	04	05	06	07	08	09	10	11	12	13	14	15	16
00	3	3	3	3	3	3	4	4	4	4	4	4	5	5	5	5	5
01	3	3	3	3	3	4	4	4	4	4	4	5	5	5	5	5	5
02	3	3	3	3	4	4	4	4	4	4	5	5	5	5	5	5	6
03	3	3	3	4	4	4	4	4	4	5	5	5	5	5	5	6	6
04	3	3	4	4	4	4	4	4	5	5	5	5	5	5	6	6	6
05	3	4	4	4	4	4	4	5	5	5	5	5	5	6	6	6	6
06	4	4	4	4	4	4	5	5	5	5	5	5	6	6	6	6	6
07	4	4	4	4	4	5	5	5	5	5	5	6	6	6	6	6	6
08	4	4	4	4	5	5	5	5	5	5	6	6	6	6	6	6	7
09	4	4	4	5	5	5	5	5	5	6	6	6	6	6	6	7	7
10	4	4	5	5	5	5	5	5	6	6	6	6	6	6	7	7	7
11	4	5	5	5	5	5	5	6	6	6	6	6	6	7	7	7	7
12	5	5	5	5	5	5	6	6	6	6	6	6	7	7	7	7	7

EXAMPLE: Cylinder block ”06”, Crankshaft ”08”
= Use bearing ”5”

No.2 and No.3 journal bearings

	Total number				” ”: Number mark
Cylinder block (A) + Crankshaft (B)	0 – 5	6 – 11	12 – 17	18 – 23	24 – 28
Use bearing	”1”	”2”	”3”	”4”	”5”

EXAMPLE: Cylinder block ”06” (A)
+ Crankshaft ”08” (B)
= Total number 14 (Use bearing ”3”)

No.2 and No.3 journal standard bearings selection chart

Crankshaft number mark	Cylinder block number mark																
	00	01	02	03	04	05	06	07	08	09	10	11	12	13	14	15	16
00	1	1	1	1	1	1	2	2	2	2	2	2	3	3	3	3	3
01	1	1	1	1	1	2	2	2	2	2	2	3	3	3	3	3	3
02	1	1	1	1	2	2	2	2	2	2	3	3	3	3	3	3	4
03	1	1	1	2	2	2	2	2	2	3	3	3	3	3	3	4	4
04	1	1	2	2	2	2	2	2	3	3	3	3	3	3	4	4	4
05	1	2	2	2	2	2	2	3	3	3	3	3	3	4	4	4	4
06	2	2	2	2	2	2	3	3	3	3	3	3	4	4	4	4	4
07	2	2	2	2	2	3	3	3	3	3	3	4	4	4	4	4	4
08	2	2	2	2	3	3	3	3	3	3	4	4	4	4	4	4	5
09	2	2	2	3	3	3	3	3	3	4	4	4	4	4	4	5	5
10	2	2	3	3	3	3	3	3	4	4	4	4	4	4	5	5	5
11	2	3	3	3	3	3	3	4	4	4	4	4	4	5	5	5	5
12	3	3	3	3	3	3	4	4	4	4	4	4	5	5	5	5	5

EXAMPLE: Cylinder block ”06”, Crankshaft ”08”
= Use bearing ”3”

Reference

Item	Mark	mm (in.)
Cylinder block main journal bore diameter (A)	"00"	66.000 (2.5984)
	"01"	66.001 (2.5985)
	"02"	66.002 (2.5985)
	"03"	66.003 (2.5985)
	"04"	66.004 (2.5986)
	"05"	66.005 (2.5986)
	"06"	66.006 (2.5987)
	"07"	66.007 (2.5987)
	"08"	66.008 (2.5987)
	"09"	66.009 (2.5988)
	"10"	66.010 (2.5988)
	"11"	66.011 (2.5989)
	"12"	66.012 (2.5989)
	"13"	66.013 (2.5989)
	"14"	66.014 (2.5990)
	"15"	66.015 (2.5990)
	"16"	66.016 (2.5990)
Crankshaft main journal diameter (B)	"00"	61.000 (2.4016)
	"01"	60.999 (2.4015)
	"02"	60.998 (2.4015)
	"03"	60.997 (2.4015)
	"04"	60.996 (2.4014)
	"05"	60.995 (2.4014)
	"06"	60.994 (2.4013)
	"07"	60.993 (2.4012)
	"08"	60.992 (2.4012)
	"09"	60.991 (2.4012)
	"10"	60.990 (2.4012)
	"11"	60.989 (2.4011)
	"12"	60.988 (2.4011)
Standard bearing center wall thickness (TMC made)	"1"	2.486 – 2.489 (0.0979 – 0.0980)
	"2"	2.489 – 2.492 (0.0980 – 0.0981)
	"3"	2.492 – 2.495 (0.0981 – 0.0982)
	"4"	2.495 – 2.498 (0.0982 – 0.0983)
	"5"	2.498 – 2.501 (0.0983 – 0.0985)
	"6"	2.501 – 2.504 (0.0985 – 0.0986)
	"7"	2.504 – 2.507 (0.0986 – 0.0987)
Standard bearing center wall thickness (TMMK made)	"1"	2.485 – 2.488 (0.0978 – 0.0980)
	"2"	2.488 – 2.491 (0.0980 – 0.0981)
	"3"	2.491 – 2.494 (0.0981 – 0.0982)
	"4"	2.494 – 2.497 (0.0982 – 0.0983)
	"5"	2.497 – 2.500 (0.0983 – 0.0984)
	"6"	2.500 – 2.503 (0.0984 – 0.0985)
	"7"	2.503 – 2.506 (0.0985 – 0.0987)

(l) Completely remove the Plastigage.

28. REMOVE CRANKSHAFT

(a) Lift out the crankshaft.

(b) Remove the 4 upper main bearings and 2 upper thrust washers from the cylinder block.

HINT:

Arrange the main bearing caps, bearings and thrust washers in the correct order.



29. CHECK FIT BETWEEN PISTON AND PISTON PIN

Try to move the piston back and forth on the piston pin.
If any movement is felt, replace the piston and pin as a set.

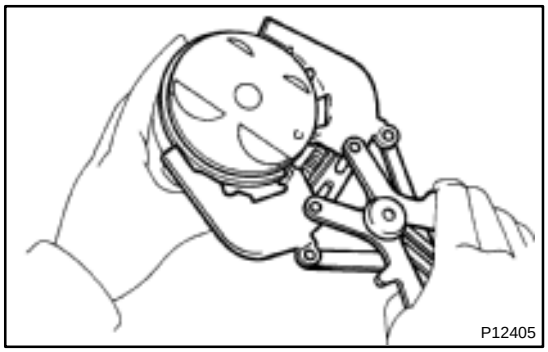

30. REMOVE PISTON RINGS

(a) Using a piston ring expander, remove the 2 compression rings.
(b) Remove the 2 side rails and oil ring by hand.

HINT:
Arrange the piston rings in the correct order only.

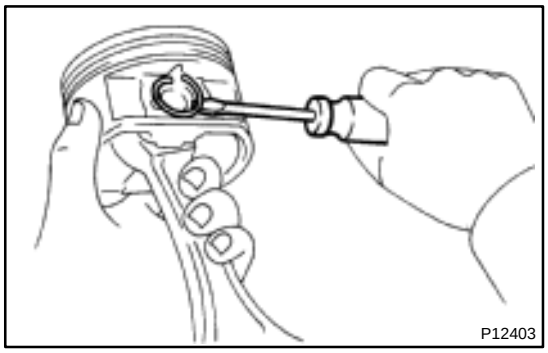

31. DISCONNECT CONNECTING ROD FROM PISTON

(a) Using a small screwdriver, pry out the 2 snap rings.

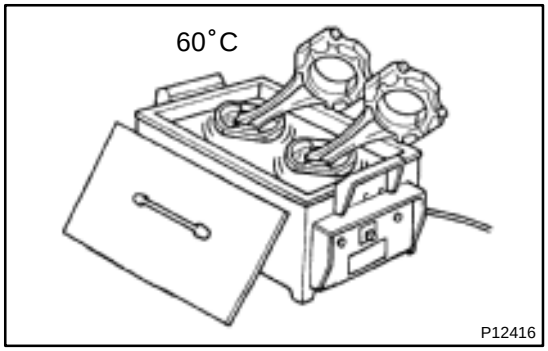

(b) Gradually heat the piston to approx. 60˚C (140˚F).

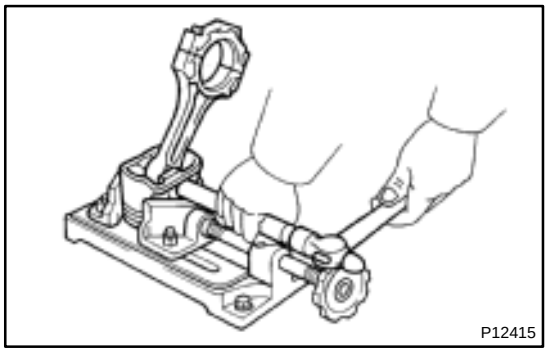

(c) Using a plastic–faced hammer and brass bar, lightly tap out the piston pin and remove the connecting rod.

HINT:
The piston and pin are a matched set.
Arrange the pistons, pins, rings, connecting rods and bearings in the correct order.

EM0YS–01

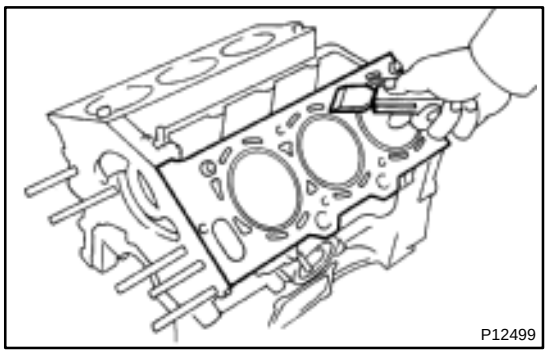

INSPECTION

1. REMOVE GASKET MATERIAL

Using a gasket scraper, remove all the gasket material from the top surface of the cylinder block.

2. CLEAN CYLINDER BLOCK

Using a soft brush and solvent, thoroughly clean the cylinder block.

NOTICE:

If the cylinder is washed at high temperatures, the cylinder liner sticks out beyond the cylinder block, so always wash the cylinder block at a temperature of 45˚C (113˚F) or less.

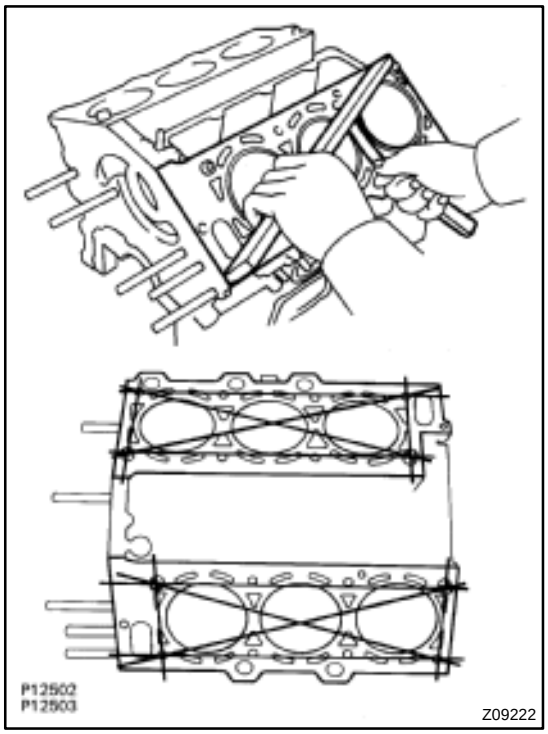

3. INSPECT TOP SURFACE OF CYLINDER BLOCK FOR FLATNESS

Using a precision straight edge and feeler gauge, measure the surface contacting the cylinder head gasket for warpage.

Maximum warpage: 0.07 mm (0.0028 in.)

If warpage is greater than maximum, replace the cylinder block.

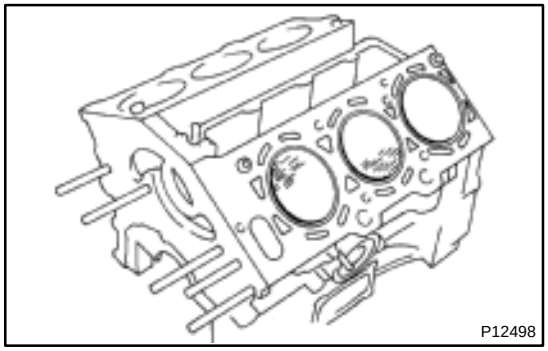

4. INSPECT CYLINDER FOR VERTICAL SCRATCHES

Visually check the cylinder for vertical scratches.

If deep scratches are present, replace the cylinder block.

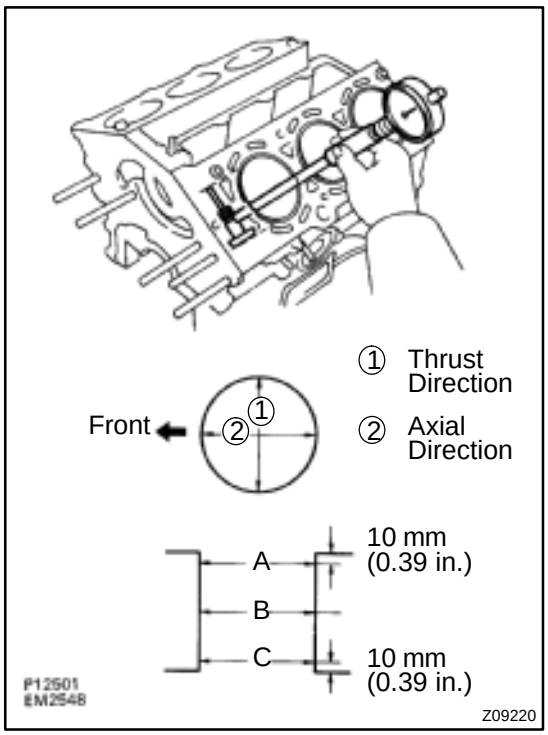

5. INSPECT CYLINDER BORE DIAMETER

Using a cylinder gauge, measure the cylinder bore diameter at positions A, B and C in the thrust and axial directions.

Standard diameter:
87.500 – 87.512 mm (3.4449 – 3.4453 in.)
Maximum diameter: 87.52 mm (3.4457 in.)

If the diameter is greater than maximum, replace the cylinder block.

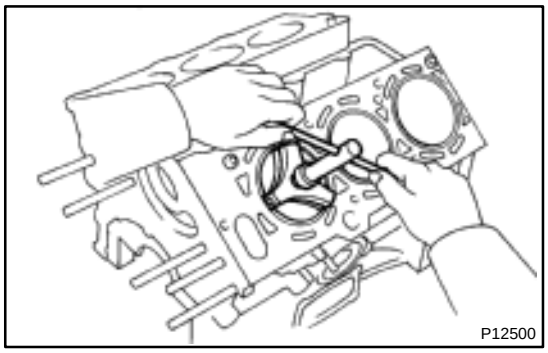

6. REMOVE CYLINDER RIDGE

If the wear is less than 0.2 mm (0.008 in.), using a ridge reamer, grind the top of the cylinder.

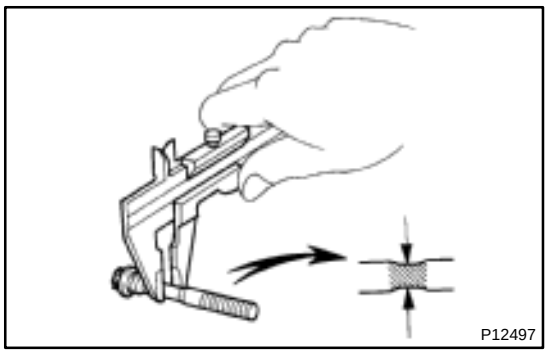

7. INSPECT 12 POINTED HEAD MAIN BEARING CAP BOLTS

Using vernier calipers, measure the tension portion diameter of the bolt.

Standard diameter:
7.500 – 7.600 mm (0.2953 – 0.2992 in.)
Minimum diameter: 7.20 mm (0.2835 in.)

If the diameter is less than minimum, replace the bolt.

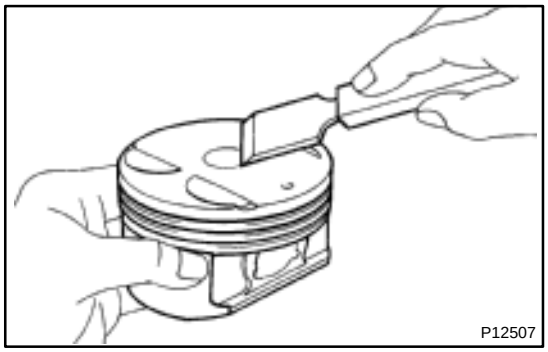

8. CLEAN PISTON

(a) Using a gasket scraper, remove the carbon from the piston top.

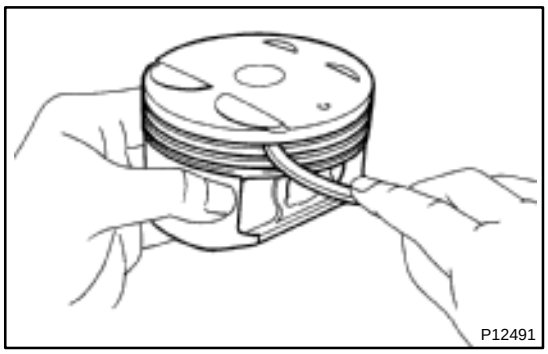

(b) Using a groove cleaning tool or broken ring, clean the piston ring grooves.

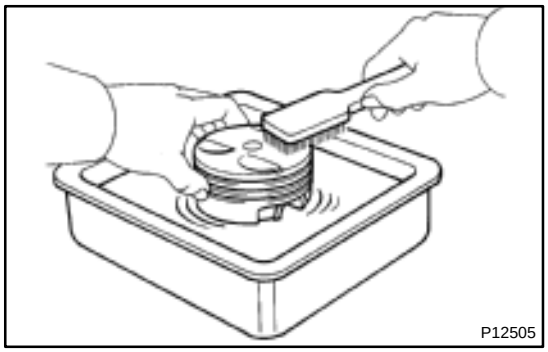

(c) Using solvent and a brush, thoroughly clean the piston.

NOTICE:

Do not use a wire brush.

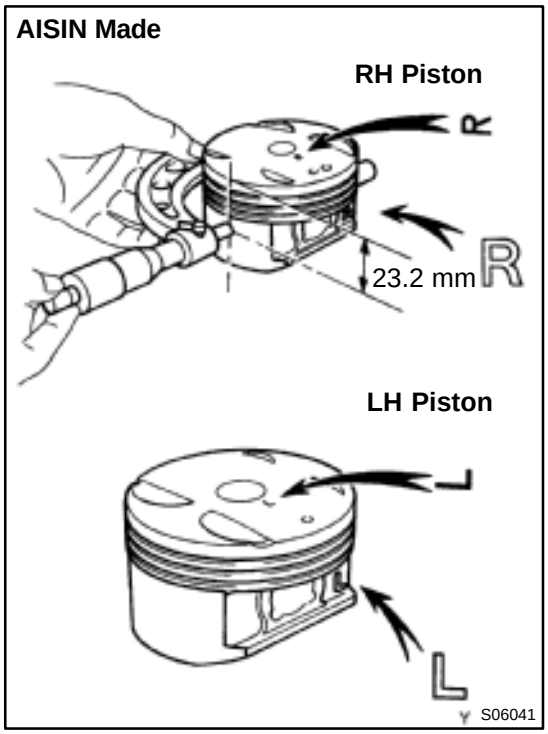

9. INSPECT PISTON OIL CLEARANCE

(a) AISIN made:

(1) Using a micrometer, measure the piston diameter at right angles to the piston pin center line, 23.2 mm (0.913 in.) from the piston head.

Piston diameter:

87.406 – 87.416 mm (3.4412 – 3.4416 in.)

(2) Measure the cylinder bore diameter in the thrust directions. (See page EM–93)

(3) Subtract the piston diameter measurement from the cylinder bore diameter measurement.

Standard oil clearance:

0.084 – 0.106 mm (0.0033 – 0.0042 in.)

Maximum oil clearance: 0.13 mm (0.0051 in.)

If the oil clearance is greater than maximum, replace all the 6 pistons. If necessary, replace the cylinder block.

HINT:

The shape of the piston varies for the RH and LH banks. The RH piston is marked with ”R”, the LH piston with ”L”.

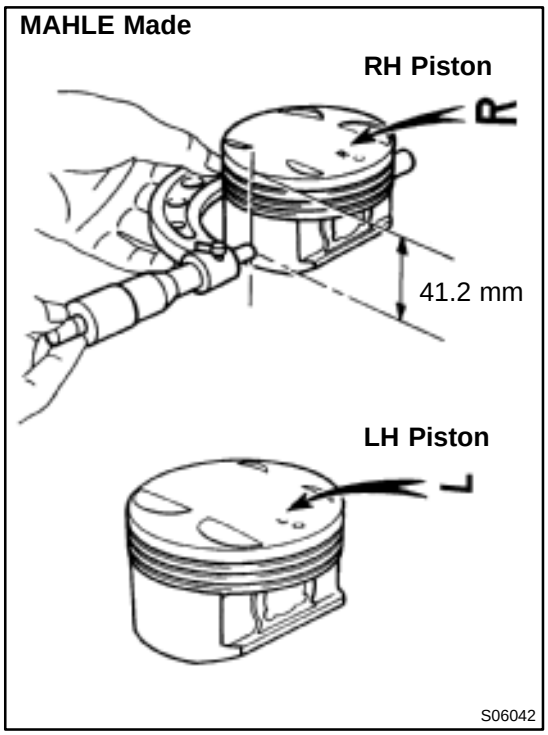

(b) MAHLE made:

(1) Using a micrometer, measure the piston diameter at right angles to the piston pin center line, 41.2 mm (1.622 in.) from the piston head.

Piston diameter:

87.453 – 87.467 mm (3.4430 – 3.4436 in.)

(2) Measure the cylinder bore diameter in the thrust directions. (See inspection in cylinder block)

(3) Subtract the piston diameter measurement from the cylinder bore diameter measurement.

Standard oil clearance:

0.033 – 0.059 mm (0.0013 – 0.0023 in.)

Maximum oil clearance: 0.08 mm (0.0031 in.)

If the oil clearance is greater than maximum, replace all the 6 pistons. If necessary, replace the cylinder block.

HINT:

The shape of the piston varies for the RH and LH banks. The RH piston is marked with ”R”, the LH piston with ”L”.

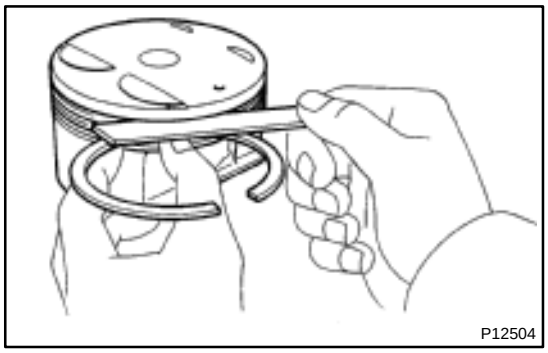

10. INSPECT PISTON RING GROOVE CLEARANCE

Using a feeler gauge, measure the clearance between new piston right and the wall of the ring groove.

Ring groove clearance:

No.1	0.020 – 0.070 mm (0.0008 – 0.0028 in.)
No.2	0.020 – 0.060 mm (0.0008 – 0.0024 in.)

If the clearance is not as specified, replace the piston.

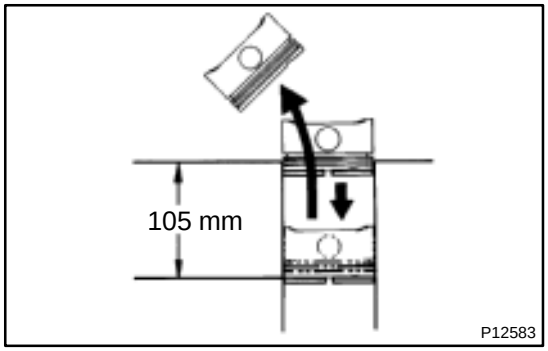

11. INSPECT PISTON RING END GAP

(a) Insert the piston ring into the cylinder bore.

(b) Using a piston, push the piston ring a little beyond the bottom of the ring travel, 105 mm (4.13 in.) from the top of the cylinder block.

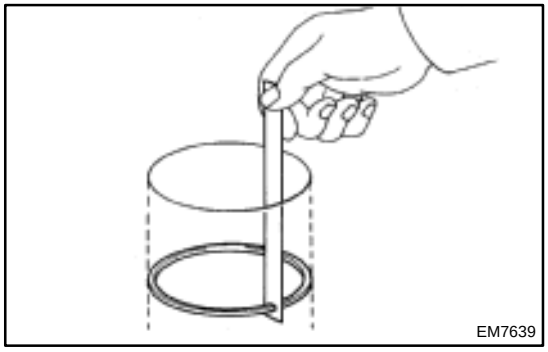

(c) Using a feeler gauge, measure the end gap.

Standard end gap:

No.1	0.25 – 0.35 mm (0.0098 – 0.0138 in.)
No.2	0.35 – 0.45 mm (0.0138 – 0.0177 in.)
Oil (Side rail)	0.15 – 0.40 mm (0.0059 – 0.0157 in.)

Maximum end gap:

No.1	0.95 mm (0.0374 in.)
No.2	1.05 mm (0.0413 in.)
Oil (Side rail)	1.00 mm (0.0394 in.)

If the end gap is greater than maximum, replace the piston ring.
If the end gap is greater than maximum, even with a new piston ring, replace the cylinder block.

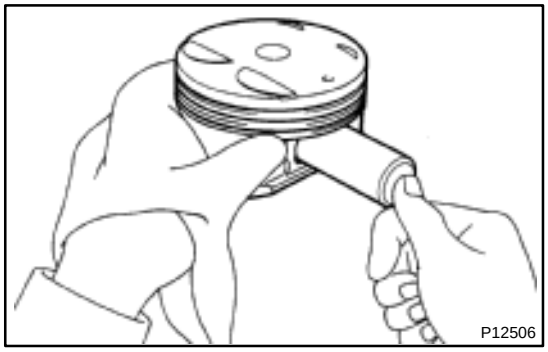

12. INSPECT PISTON PIN FIT

At 60°C (140°F), you should be able to push the piston pin into the piston pin hole with your thumb.

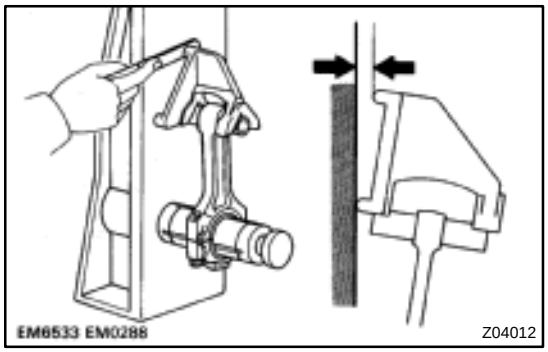

13. INSPECT CONNECTING ROD ALIGNMENT

Using a rod aligner and feeler gauge, check the connecting rod alignment.

Check for out–of–alignment.

Maximum out–of–alignment:

0.05 mm (0.0020 in.) per 100 mm (3.94 in.)

If bend is greater than maximum, replace the connecting rod assembly.

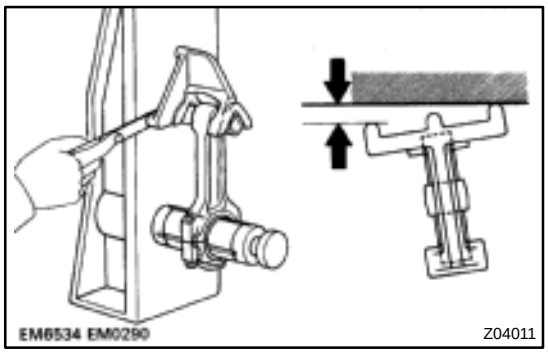

Check for twist

Maximum twist:

0.15 mm (0.0059 in.) per 100 mm (3.94 in.)

If twist is greater than maximum, replace the connecting rod assembly.

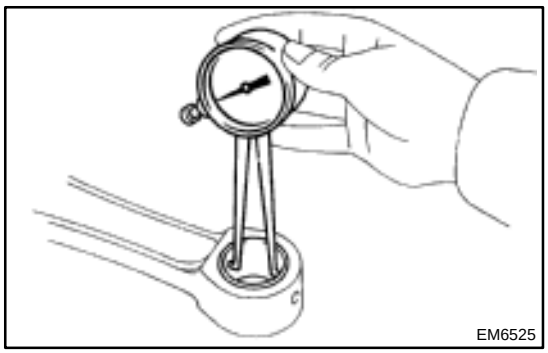

14. INSPECT PISTON PIN OIL CLEARANCE

(a) Using a caliper gauge, measure the inside diameter of the connecting rod bushing.

Bushing inside diameter:

22.005 – 22.014 mm (0.8663 – 0.8667 in.)

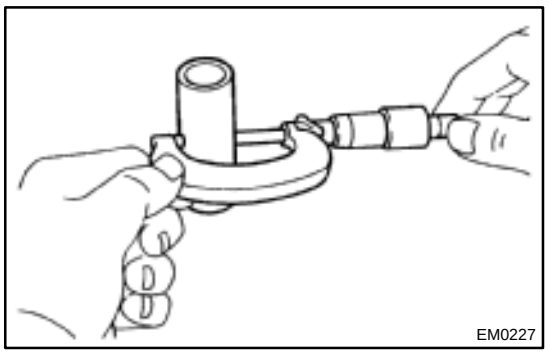
EM0227

(b) Using a micrometer, measure the piston pin diameter.
Piston pin diameter:
21.997 – 22.006 mm (0.8660 – 0.8664 in.)

(c) Subtract the piston pin diameter measurement from the bushing inside diameter measurement.
Standard oil clearance:
0.005 – 0.011 mm (0.0002 – 0.0004 in.)
Maximum oil clearance: 0.05 mm (0.0020 in.)

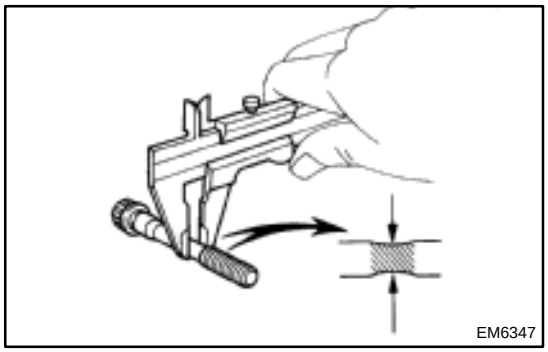
EM6347

15. INSPECT CONNECTING ROD BOLTS

Using vernier calipers, measure the tension portion diameter of the bolt.

Standard diameter: 7.2 – 7.3 mm (0.284 – 0.287 in.)
Minimum diameter: 7.0 mm (0.276 in.)

If the diameter is less than minimum, replace the bolt.

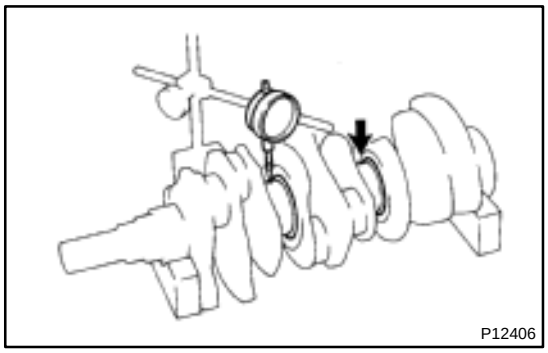
P12406

16. INSPECT CRANKSHAFT FOR CIRCLE RUNOUT

(a) Place the crankshaft on V–blocks.

(b) Using a dial indicator, measure the circle runout, as shown in the illustration.
Maximum circle runout: 0.06 mm (0.0024 in.)

If the circle runout is greater than maximum, replace the crankshaft.

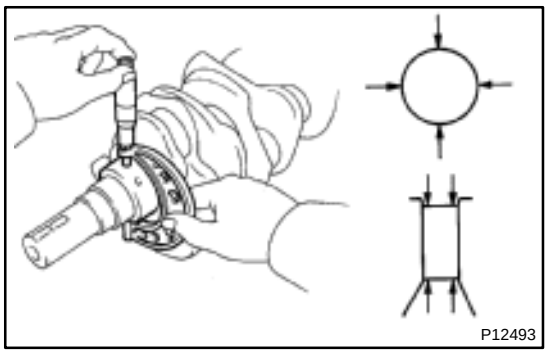
P12493

17. INSPECT MAIN JOURNALS AND CRANK PINS

(a) Using a micrometer, measure the diameter of each main journal and crank pin.
Main journal diameter:
60.988 – 61.000 mm (2.4011 – 2.4016 in.)
Crank pin diameter:
52.992 – 53.000 mm (2.0862 – 2.0866 in.)

If the diameter is not as specified, check the oil clearance.
(See page EM–83)
If necessary, replace the crankshaft.

(b) Check each main journal and crank pin for taper and out–of–round as shown.
Maximum taper and out–of–round:
0.02 mm (0.0008 in.)

If the taper and out–of–round is greater than maximum, replace the crankshaft.

EM0YT–01

REPLACEMENT

1. REPLACE CONNECTING ROD BUSHING

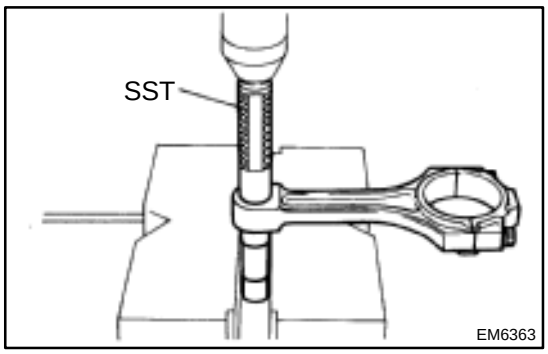

(a) Using SST and a press, press out the bushing.
SST 09222–30010

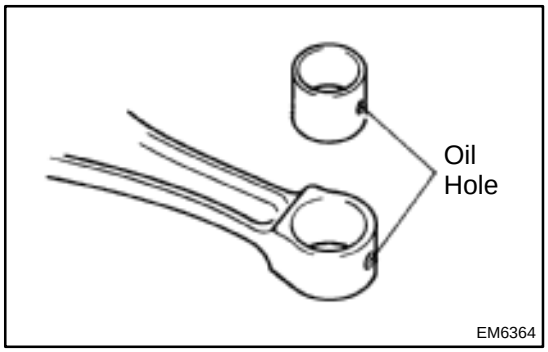

(b) Align the oil holes of a new bushing and the connecting rod.

(c) Using SST and a press, press in the bushing.
SST 09222–30010

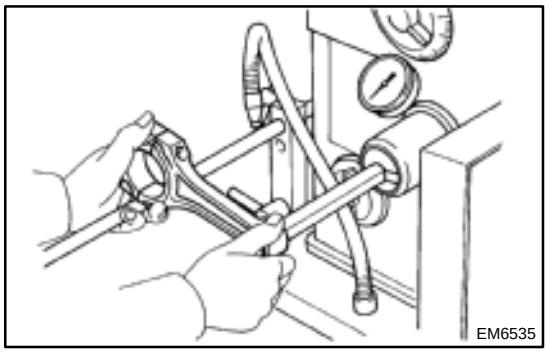

(d) Using a pin hole grinder, hone the bushing to obtain the standard specified clearance (See page EM–93) between the bushing and piston pin.

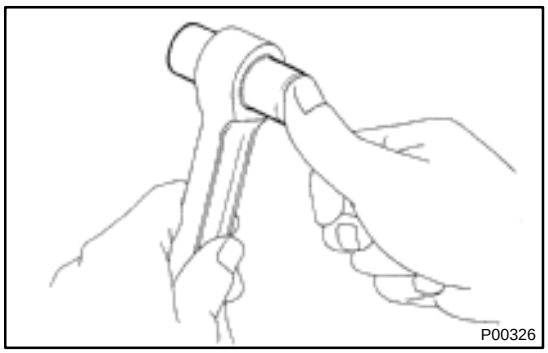

(e) Check the piston pin fit at normal room temperature. Coat the piston pin with engine oil, and push it into the connecting rod with your thumb.

2. REPLACE CRANKSHAFT FRONT OIL SEAL

(See page LU–13)

3. REPLACE CRANKSHAFT REAR OIL SEAL

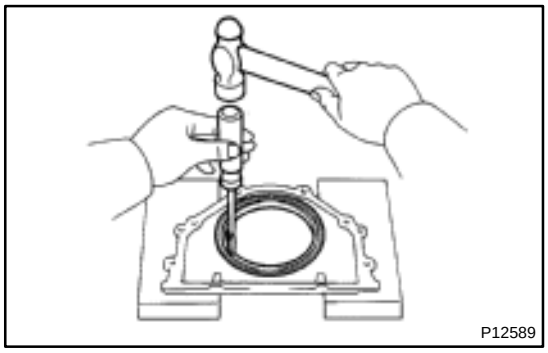

HINT:

There are 2 methods ((a) and (b)) to replace the oil seal which are as follows:

(a) If the rear oil seal retainer is removed from the cylinder block.

(1) Using a screwdriver and hammer, tap out the oil seal.

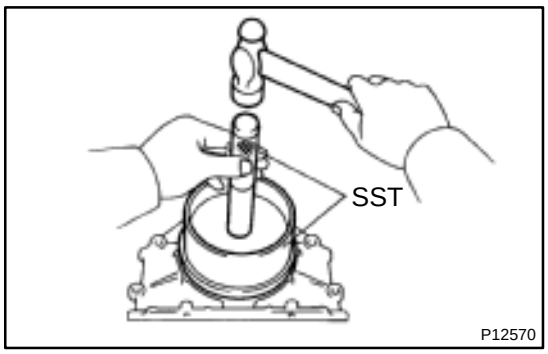

(2) Using SST and a hammer, tap in a new oil seal until its surface is flush with the rear oil seal retainer edge.

SST 09223–15030, 09950–70010 (09951–07100)

(3) Apply MP grease to the oil seal lip.

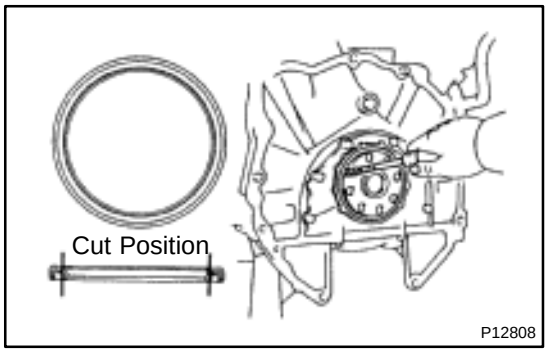

(b) If the rear oil seal retainer is installed to the cylinder block.

(1) Using a knife, cut off the oil seal lip.

(2) Using a screwdriver, pry out the oil seal.

NOTICE:

Be careful not to damage the crankshaft. Tape the screwdriver tip.

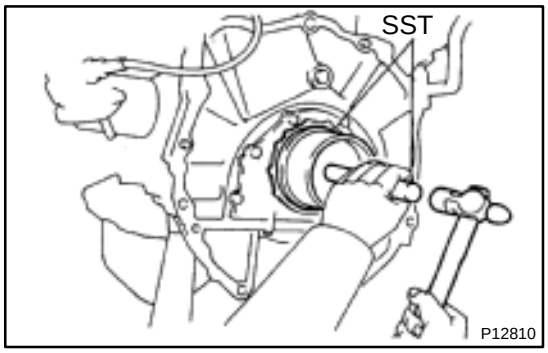

(3) Apply MP grease to a new oil seal lip.

(4) Using SST and a hammer, tap in the oil seal until its surface is flush with the rear oil seal retainer edge.

SST 09223–15030, 09950–70010 (09951–07100)

EM053–04

REASSEMBLY

HINT:

Thoroughly clean all parts to be assembled.
Before installing the parts, apply new engine oil to all sliding and rotating surfaces.
Replace all gaskets, O–rings and oil seals with new parts.

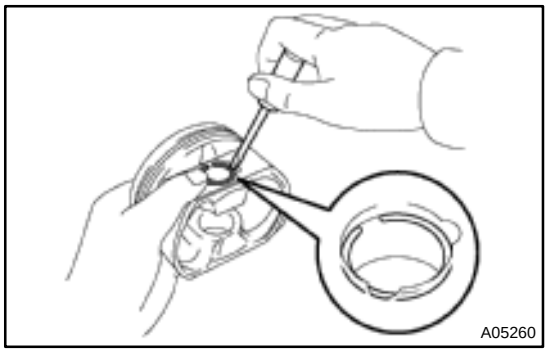

1. ASSEMBLE PISTON AND CONNECTING ROD

(a) Using a small screwdriver, install a new snap ring at one end of the piston pin hole.

HINT:

Be sure that end gap of the snap ring is not aligned with the pin hole cutout portion of the piston.

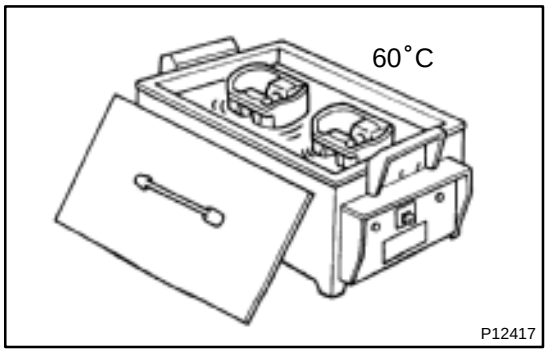

(b) Gradually heat the piston to about 60˚C (140˚F).

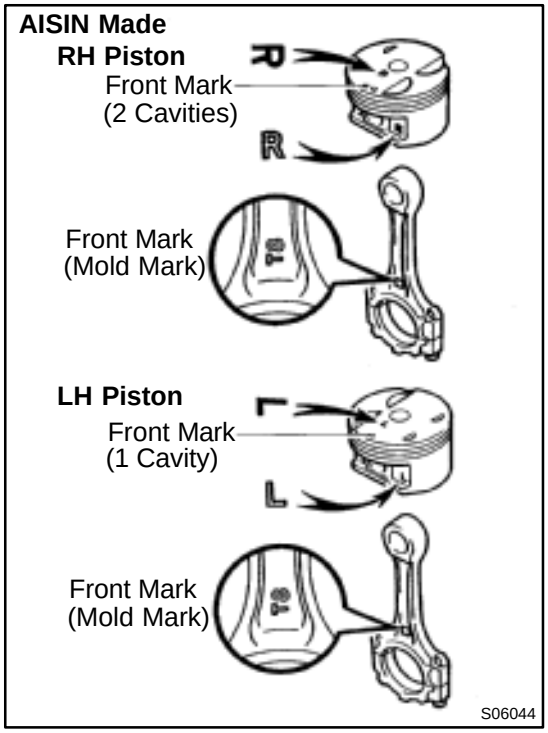

(c) Coat the piston pin with engine oil.

(d) Align the front marks of the piston and connecting rod, and push in the piston pin with your thumb.

(e) Using a small screwdriver, install a new snap ring on the other end of the piston pin hole.

HINT:

Be sure that end gap of the snap ring is not aligned with the pin hole cutout portion of the piston.

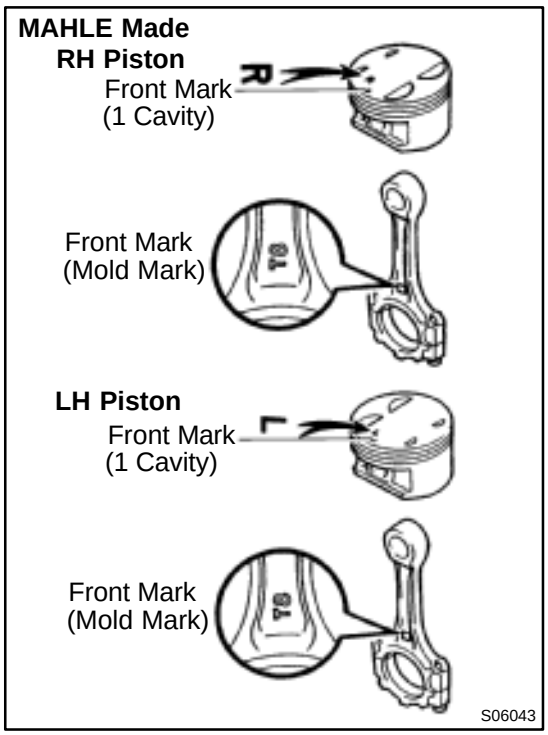

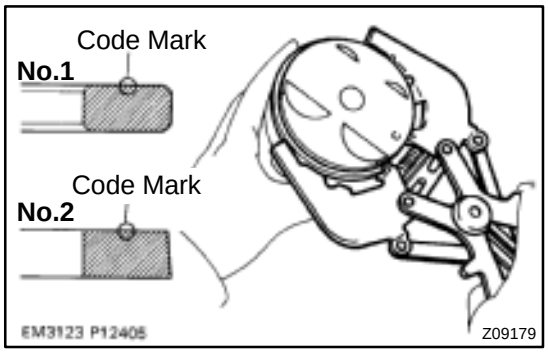

2. INSTALL PISTON RINGS

(a) Install the oil ring expander and 2 side rails by hand.

(b) Using a piston ring expander, install the 2 compression rings with the code mark facing upward.

Code mark:

No.1	1R, T or G1
No.2	2R, 2T or G2

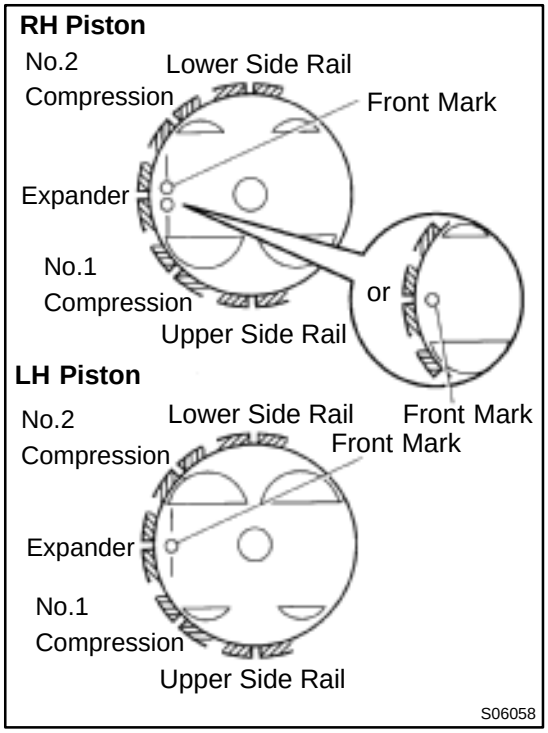

(c) Position the piston rings so that the ring ends are as shown.

NOTICE:

Do not align the ring ends.

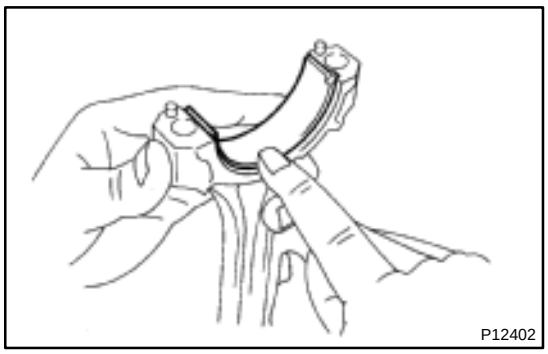

3. INSTALL CONNECTING ROD BEARINGS

(a) Align the bearing claw with the groove of the connecting rod or connecting cap.

(b) Install the bearings in the connecting rod and connecting rod cap.

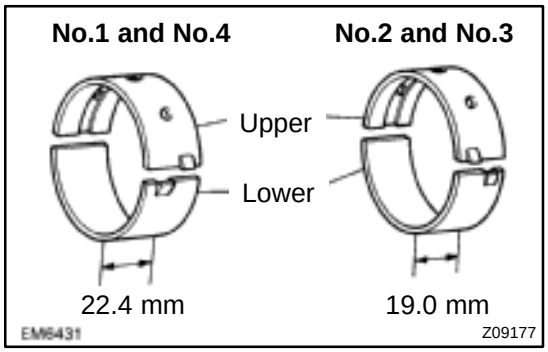

4. INSTALL MAIN BEARINGS

HINT:

Main bearings come in widths of 19.0 mm (0.748 in.) and 22.4 mm (0.882 in.). Install the 22.4 mm (0.882 in.) bearings in the No.1 and No.4 cylinder block journal positions with the main bearing cap. Install the 19.0 mm (0.748 in.) bearings in the No.2 and No.3 positions.

Upper bearings have an oil groove and oil holes; lower bearings do not.

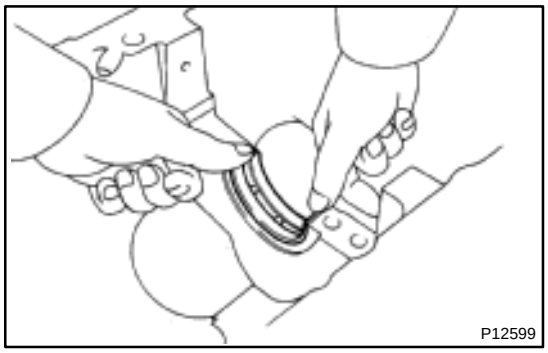

(a) Align the bearing claw with the claw groove of the cylinder block, and push in the 4 upper bearings.

NOTICE:

Install the bearing with the oil hole in the cylinder block.

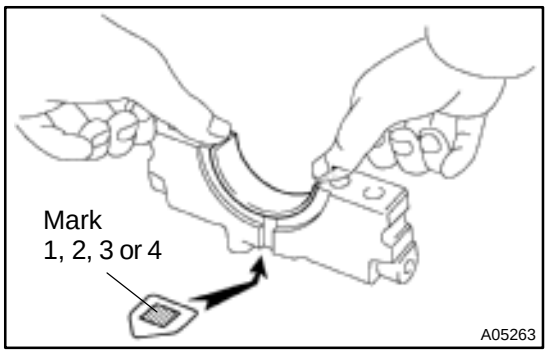

(b) Align the bearing claw with the claw groove of the main bearing cap, and push in the 4 lower bearings.

HINT:

A number is marked on each main bearing cap to indicate the installation position.

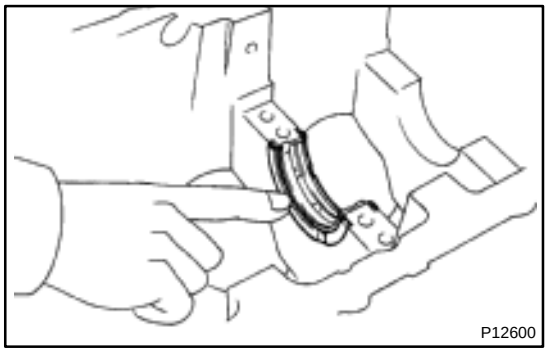

5. INSTALL UPPER THRUST WASHERS

Install the 2 thrust washers under the No.2 journal position of the cylinder block with the oil grooves facing outward.

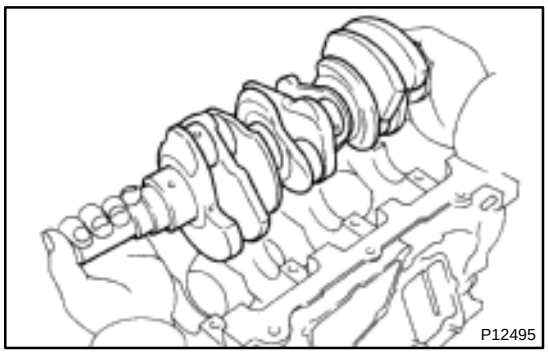

6. PLACE CRANKSHAFT ON CYLINDER BLOCK

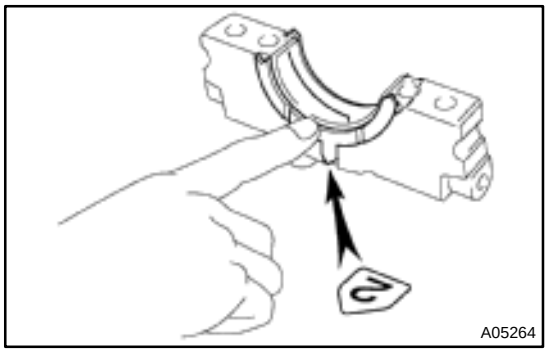

7. PLACE MAIN BEARING CAPS AND LOWER THRUST WASHERS ON CYLINDER BLOCK

(a) Install the 2 thrust washers on the No.2 bearing cap with the grooves facing outward.

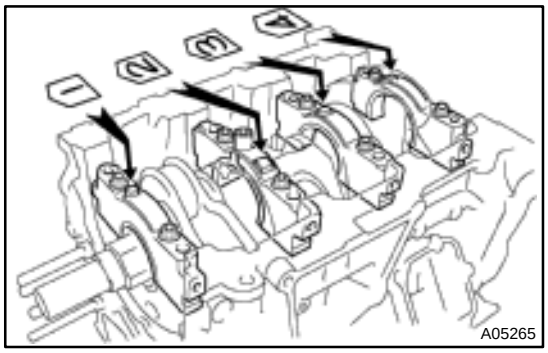

(b) Temporarily place the 4 main bearing caps level and let them in their proper locations.

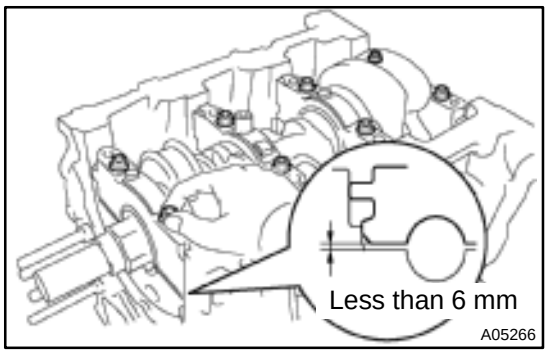

(c) Apply a light coat of engine oil on the threads and under the main bearing cap bolts for the 12 pointed head.

(d) Temporarily install the 8 main bearing cap bolts to the inside positions.

(e) Insert the main bearing cap with your hand until the clearance between the main bearing cap and the cylinder block will become less than 6 mm (0.23 in.) by making the 2 internal main bearing cap bolts as a guide.

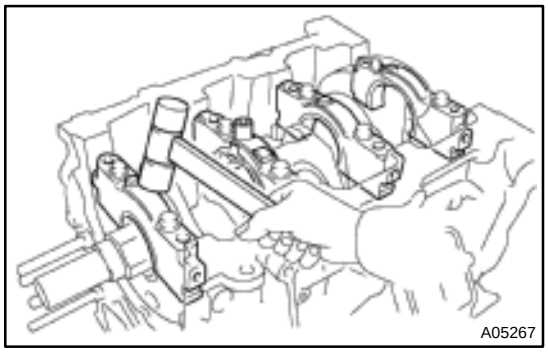

(f) Using a plastic–faced hammer, lightly tap the bearing cap to ensure a proper fit.

8. INSTALL 12 POINTED HEAD MAIN BEARING CAP BOLTS

HINT:

The main bearing cap bolts are tightened in 2 progressive steps (steps (b) and (d)).

If any of the main bearing cap bolts is broken or deformed, replace it.

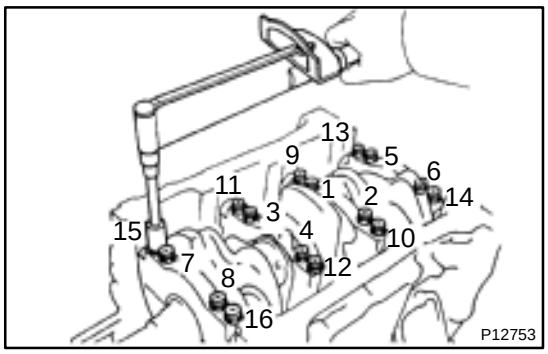

(a) Apply a light coat of engine oil on the threads and under the main bearing cap bolts.
(b) Install and uniformly tighten the 16 main bearing cap bolts, in several passes, in the sequence shown.
Torque: 22 N·m (225 kgf·cm, 16 ft·lbf)

If any of the main bearing cap bolts does not meet the torque specification, replace the main bearing cap bolt.

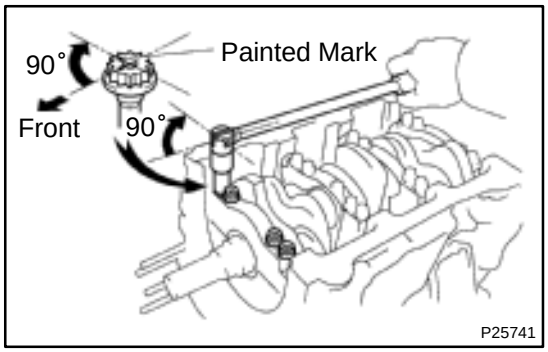

(c) Mark the front of the main bearing cap bolts with paint.
(d) Retighten the main bearing cap bolts by 90° in the numerical order shown.
(e) Check that the painted mark is now at a 90° angle to the front.

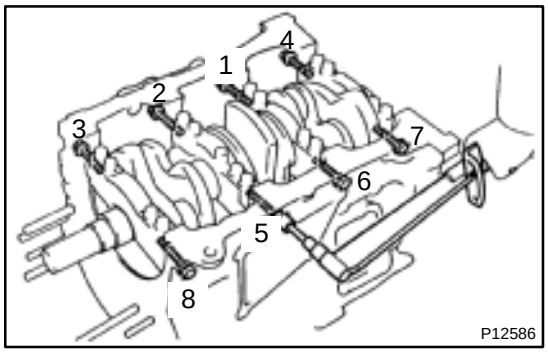

9. INSTALL HEXAGON HEAD MAIN BEARING CAP BOLTS

(a) Install a new seal washer to the main bearing cap bolt.
(b) Install and uniformly tighten the 8 main bearing cap bolts, in several passes, in the sequence shown.
Torque: 27 N·m (275 kgf·cm, 20 ft·lbf)
(c) Check that the crankshaft turns smoothly.

10. CHECK CRANKSHAFT THRUST CLEARANCE
(See page EM–83)

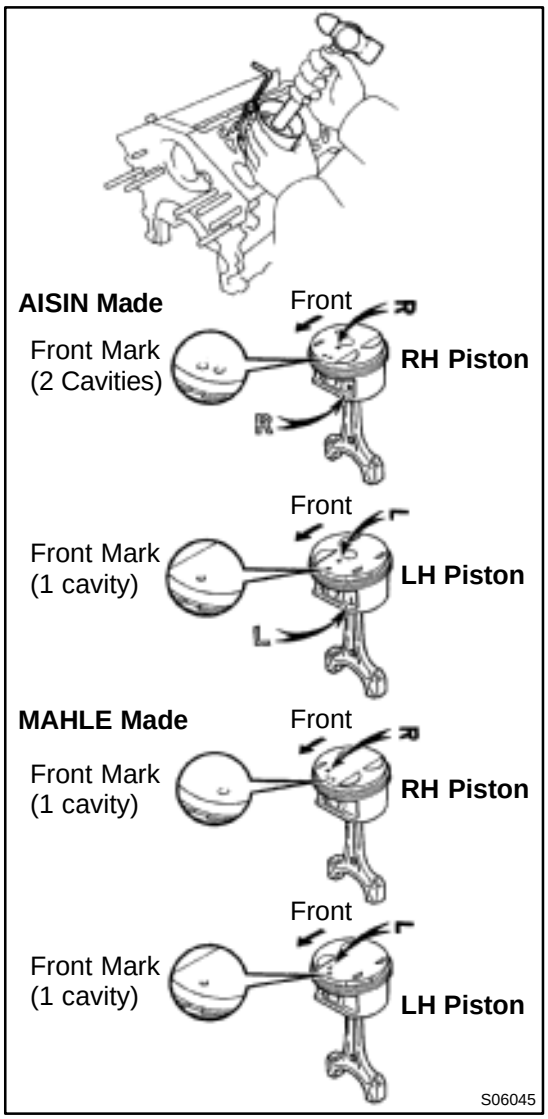

11. INSTALL PISTON AND CONNECTING ROD ASSEMBLES

Using a piston ring compressor, push the correctly numbered piston and connecting rod assemblies into each cylinder with the front mark of the piston facing forward.

HINT:

The shape of the piston varies for the RH and LH banks. The RH piston is marked with ”R”, the LH piston with ”L”.

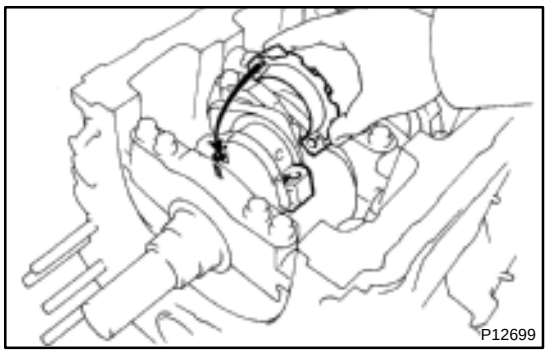

12. PLACE CONNECTING ROD CAP ON CONNECTING ROD

(a) Match the numbered connecting rod cap with the connecting rod.

(b) Align the pin dowels of the connecting rod cap with the pins of the connecting rod, and install the connecting rod.

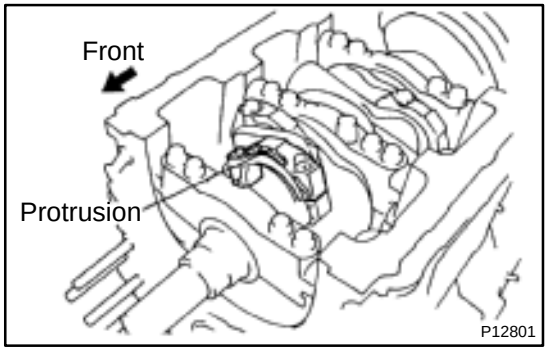

(c) Check that the protrusion of the connecting rod cap is facing in the correct direction.

13. INSTALL CONNECTING ROD CAP BOLTS

HINT:

The connecting rod cap bolts are tightened in 2 progressive steps (steps (b) and (d)).

If any of the connecting rod cap bolts is broken or deformed, replace it.

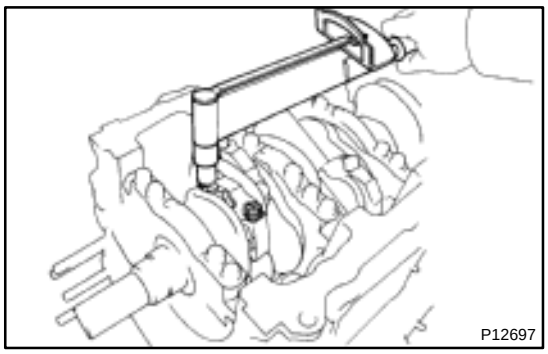

(a) Apply a light coat of engine oil on the threads and under the heads of the connecting rod cap bolts.
(b) Install and alternately tighten the 2 connecting rod cap bolts in several passes.

Torque: 24.5 N·m (250 kgf·cm, 18 ft·lbf)

If any of the connecting rod cap bolts does not meet the torque specification, replace the connecting rod cap bolts.

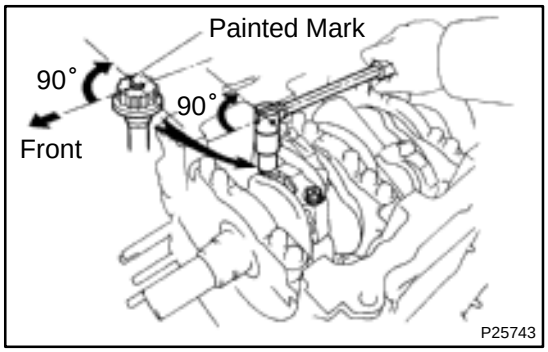

(c) Mark the front of the connecting cap bolts with paint.
(d) Retighten the cap bolts by 90° as shown.
(e) Check that the painted mark is now at a 90° angle to the front.
(f) Check that the crankshaft turns smoothly.

14. CHECK CONNECTING ROD THRUST CLEARANCE (See page EM–83)

15. INSTALL REAR OIL SEAL RETAINER

(a) Remove any old packing (FIPG) material and be careful not to drop any oil on the contact surfaces of the oil seal retainer and cylinder block.

Using a razor blade and gasket scraper, remove all the oil packing (FIPG) material from the gasket surfaces and sealing grooves.

Thoroughly clean all components to remove all the loose material.

Using a non–residue solvent, clean both sealing surfaces.

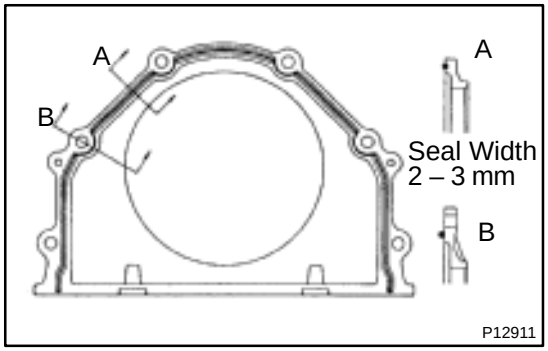

(b) Apply seal packing to the oil seal retainer as shown in the illustration.

Seal packing: Part No. 08826–00080 or equivalent

Install a nozzle that has been cut to a 2 – 3 mm (0.08 – 0.12 in.) opening.

Parts must be assembled within 3 minutes of application. Otherwise the material must be removed and reapplied.

Immediately remove nozzle from the tube and reinstall cap.

(c) Install the oil seal retainer with the 6 bolts Uniformly tighten the bolt in several passes, in the sequence shown.

Torque: 8 N·m (80 kgf·cm, 69 in.·lbf)

16. INSTALL EGR COOLER

Install a new gasket and the EGR cooler with the 3 bolts and 2 nuts.

Torque: 9 N·m (90 kgf·cm, 78 in.·lbf)

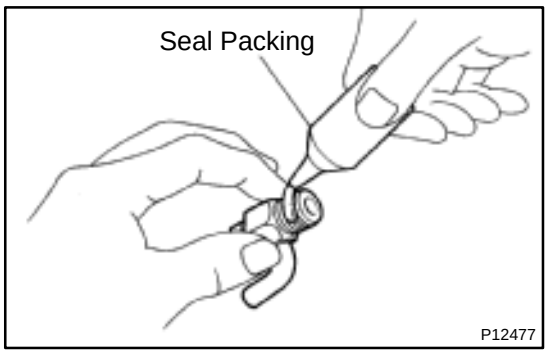

17. INSTALL ENGINE COOLANT DRAIN UNION

(a) Apply seal packing to 2 or 3 threads.

Seal packing: Part No. 08826–00100 or equivalent

(b) Install the drain union.

Torque: 39 N·m (400 kgf·cm, 29 ft·lbf)

HINT:

After applying the specified torque, rotate the drain union clockwise until its drain port is facing downward.

18. INSTALL WATER SEAL PLATE

(a) Remove any old packing (FIPG) material and be careful not to drop any oil on the contact surfaces of the seal plate and cylinder block.

Using a razor blade and gasket scraper, remove all the old packing (FIPG) material from the gasket surfaces and sealing groove.

Thoroughly clean all components to remove all the loose material.

Using a non–residue solvent, clean both sealing surfaces.

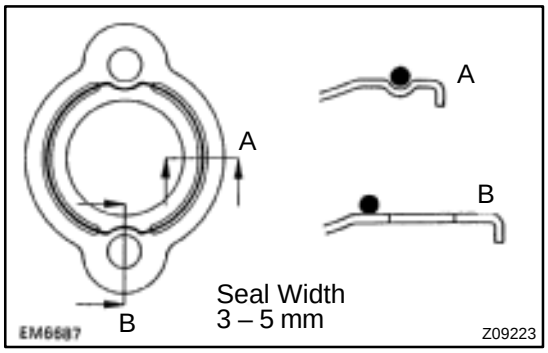

(b) Apply seal packing to the seal plate as shown in the illustration.

Seal packing: Part No. 08826–00100 or equivalent

Install a nozzle that has been cut to a 3 – 5 mm (0.12 – 0.20 in.) opening.

Parts must be assembled within 3 minutes of application. Otherwise the material must be removed and reapplied.

Immediately remove nozzle from the tube and reinstall cap.

(c) Install the seal plate with the 2 nuts.

Torque: 18 N·m (180 kgf·cm, 13 ft·lbf)

19. INSTALL OIL FILTER UNION

Torque: 30 N·m (310 kgf·cm, 22 ft·lbf)

20. INSTALL OIL FILTER (See page LU–15)

21. INSTALL OIL PUMP (See page LU–15)

22. INSTALL NO.1 OIL PAN (See page LU–15)

23. INSTALL OIL STRAINER (See page LU–15)

24. INSTALL NO.2 OIL PAN (See page LU–15)

25. INSTALL WATER PUMP (See page CO–8)

26. INSTALL WATER INLET HOUSING

(a) Remove any old packing (FIPG) material and be careful not to drop any oil on the contact surfaces of the water inlet housing and cylinder block.

Using a razor blade and gasket scraper, remove all the old packing (FIPG) material from the gasket surfaces and sealing grooves.

Thoroughly clean all components to remove all the loose material.

Using a non–residue solvent, clean both sealing surfaces.

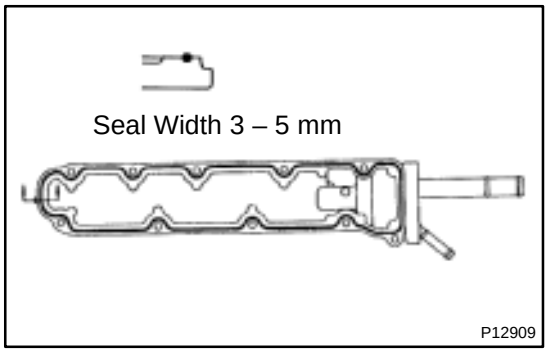

(b) Apply seal packing to the water inlet housing as shown in the illustration.

Seal packing: Part No. 08826–00100 or equivalent

Install a nozzle that has been cut to a 3 – 5 mm (0.12 – 0.20 in.) opening.

HINT:

Avoid applying an excessive amount to the surface.

Parts must be assembled within 3 minutes of application. Otherwise the material must be removed and reapplied.

Immediately remove nozzle from the tube and reinstall cap.

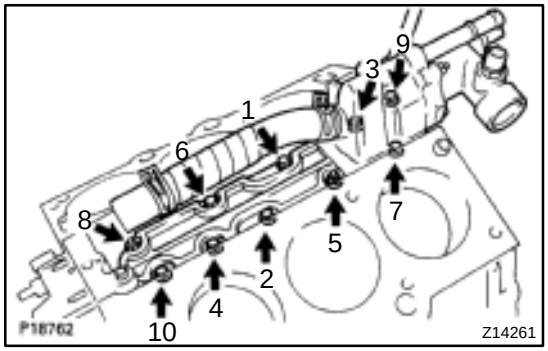

(c) Install the water inlet housing with the 8 bolts and 2 nuts. Uniformly tighten the bolts and nuts, in several passes, in the sequence shown.

Torque: 8 N·m (80 kgf·cm, 69 in.·lbf)

(d) Install the engine wire band.

(e) Install the engine wire clamp.

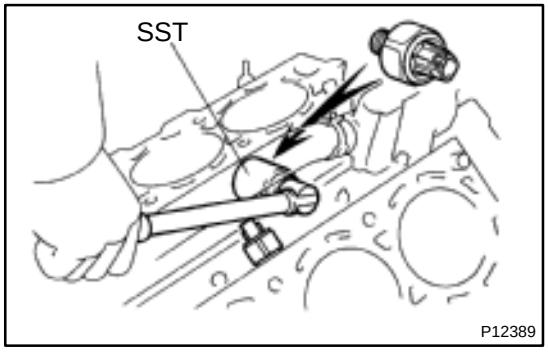

27. INSTALL KNOCK SENSORS

(a) Using SST, install the 2 knock sensors.

SST 09816–30010

Torque: 39 N·m (400 kgf·cm, 29 ft·lbf)

(b) Connect the 2 knock sensor connectors.

28. INSTALL NO.2 IDLER PULLEY BRACKET

Torque: 28 N·m (290 kgf·cm, 21 ft·lbf)

29. INSTALL A/C COMPRESSOR HOUSING BRACKET

Torque: 25 N·m (250 kgf·cm, 18 ft·lbf)

30. INSTALL OIL PRESSURE SWITCH
(See page LU–1)

31. INSTALL GENERATOR, BRACKET AND ADJUSTING BAR ASSEMBLY
Torque: 43 N·m (440 kgf·cm, 32 ft·lbf)

32. INSTALL CYLINDER HEAD (See page EM–57)

33. INSTALL TIMING PULLEYS AND BELT
(See page EM–21)

34. REMOVE ENGINE STAND

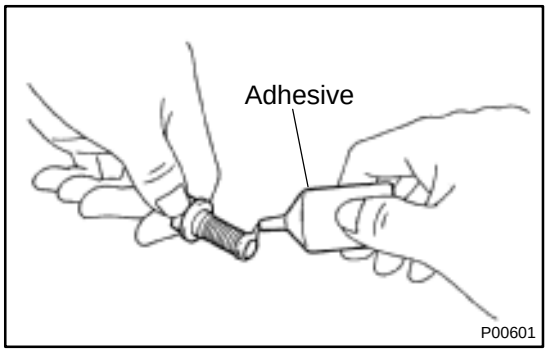

35. A/T:
INSTALL DRIVE PLATE

(a) Apply adhesive to 2 or 3 threads of the bolt end.
Adhesive: Part No. 08833–00070, THREE BOND 1324 or equivalent

(b) Install the front spacer, drive plate and rear plate on the crankshaft.

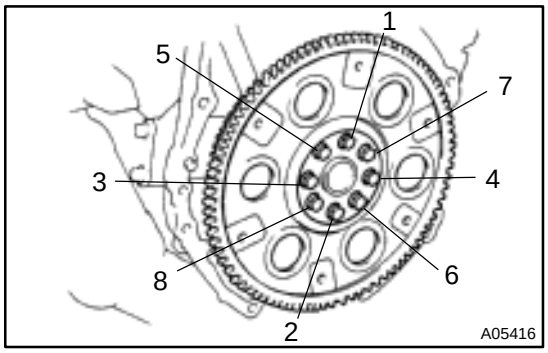

(c) Install and uniformly tighten the 8 bolts, in several passes, in the sequence shown.
Torque: 83 N·m (850 kgf·cm, 61 ft·lbf)

36. M/T:
INSTALL FLYWHEEL (See step 35)
Torque: 83 N·m (850 kgf·cm, 61 ft·lbf)

EXHAUST SYSTEM

EM0YU–01

COMPONENTS

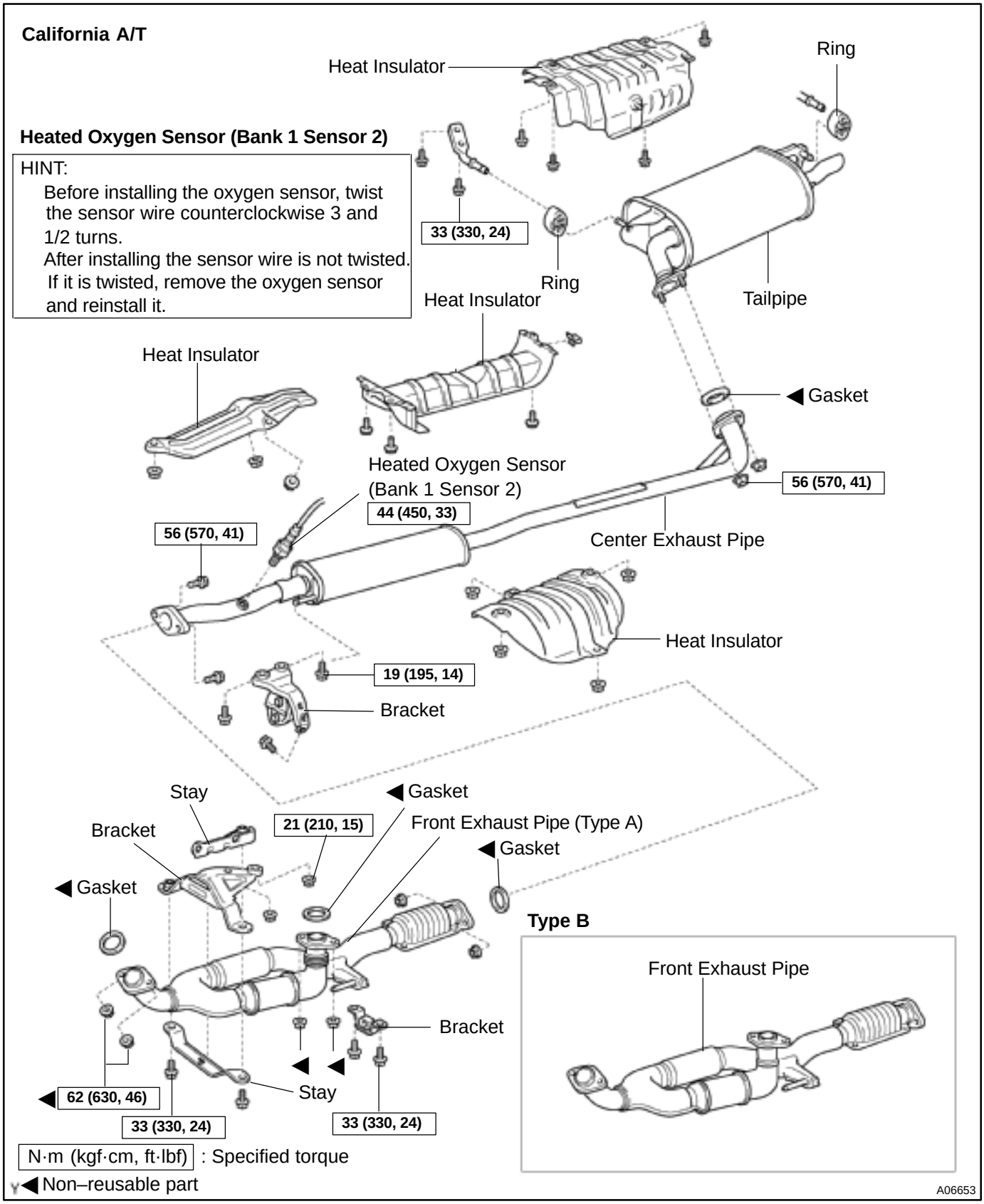

Except California A/T

Heated Oxygen Sensor (Bank 1 Sensor 2)

HINT:
Before installing the oxygen sensor, twist the sensor wire counterclockwise 3 and 1/2 turns.
After installing the sensor wire is not twisted.
If it is twisted, remove the oxygen sensor and reinstall it.

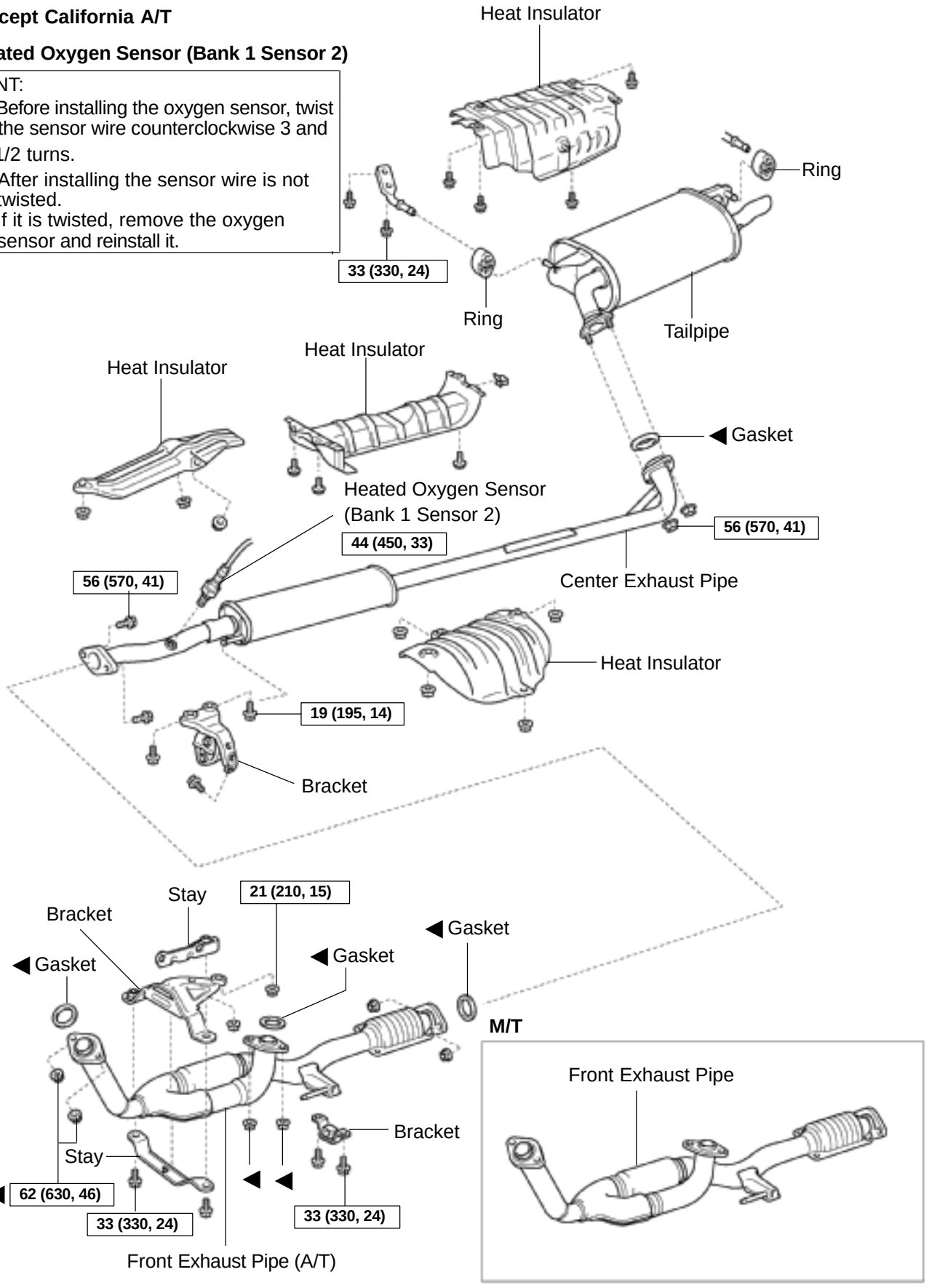

N·m (kgf·cm, ft·lbf) : Specified torque
◀ Non–reusable part

A06652

RS02P–03

REMOVAL

NOTICE:

- **If the wiring connector of the SRS is disconnected and the ignition switch is in ON or ACC position, DTCs will be recorded.**
- **Never use the airbag parts from another vehicle. When replacing parts, replace them with new parts.**

HINT:

For step 2 to 4, refer to page BO–75.

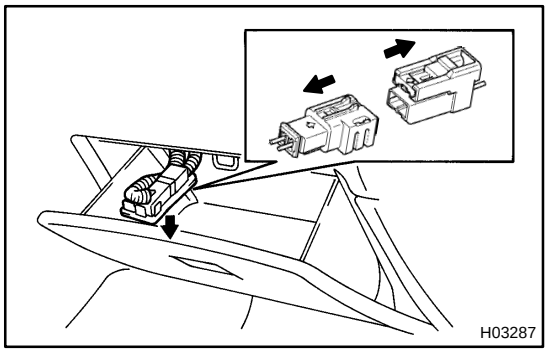

1. DISCONNECT AIRBAG CONNECTOR

(a) Remove the glove compartment door finish plate inside the glove compartment box.

NOTICE:

When handling the airbag connector, take care not to damage the airbag wire harness.

(b) Pull up the connector.

(c) Disconnect the front passenger airbag connector.

2. REMOVE FRONT DOOR SCUFF PLATE

3. REMOVE COWL SIDE TRIM

4. REMOVE GLOVE COMPARTMENT BOX

5. REMOVE FRONT PASSENGER AIRBAG ASSEMBLY

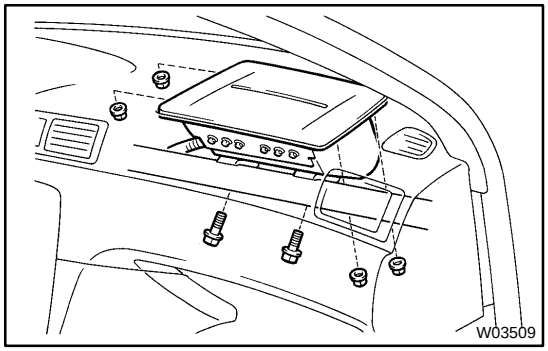

Remove the 2 bolts, 4 nuts and front passenger airbag assembly.

CAUTION:

- **Do not store the front passenger airbag assembly with the airbag deployment side facing downward.**
- **Never disassemble the front passenger airbag assembly.**

CLIP

REPLACEMENT

BO0LJ–01

The removal and installation methods of typical clips used in body parts are shown in the table below.
HINT:
If the clip is damaged during the operation, always replace it with a new clip.

Shape (Example)	Removal/Installation
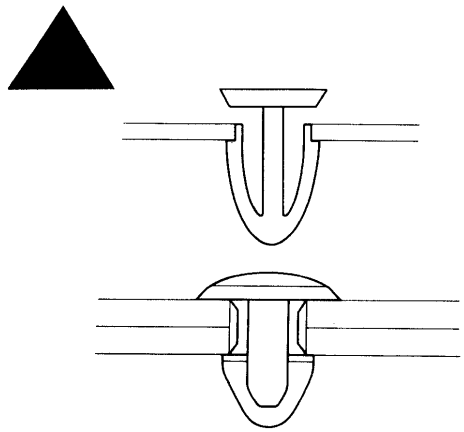	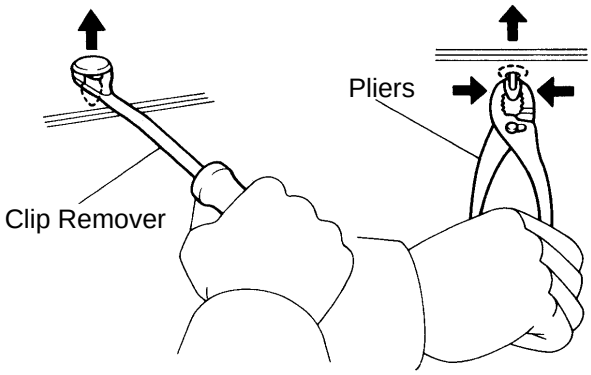
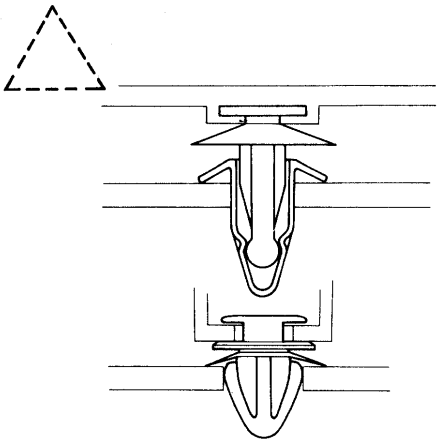	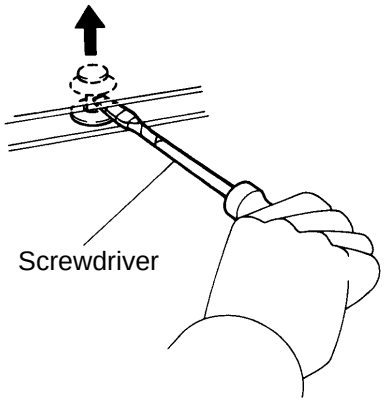
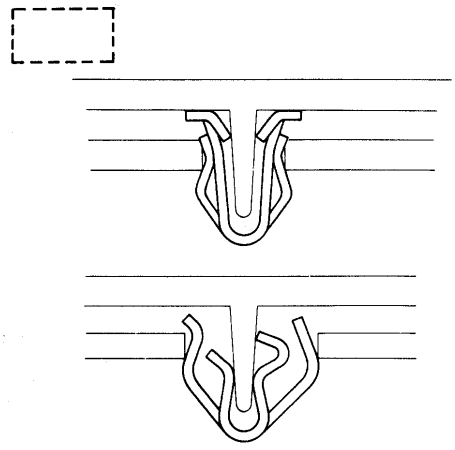	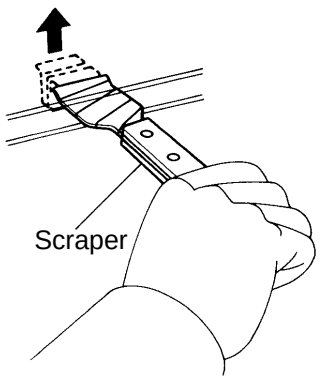

Shape (Example)	Removal/Installation
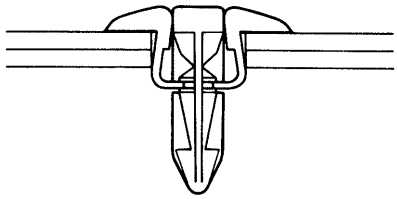	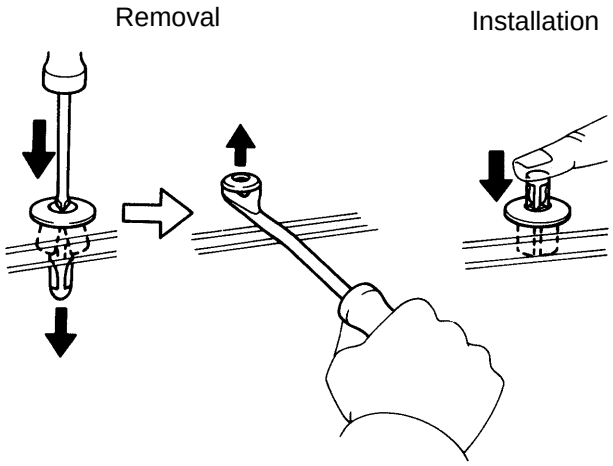
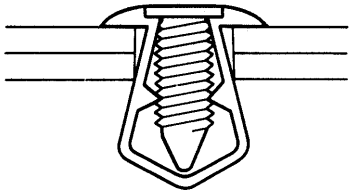	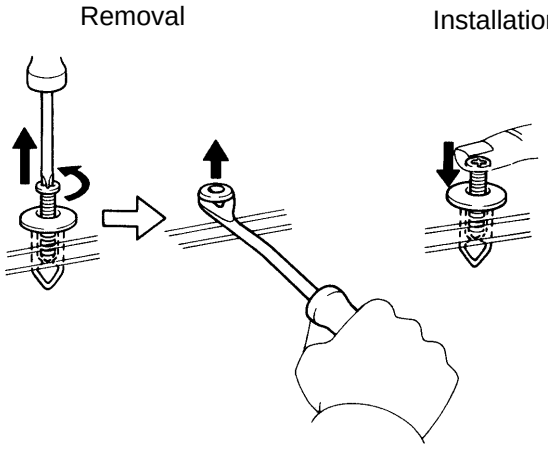

V00012

FRONT DOOR

COMPONENTS

BO0L2–01

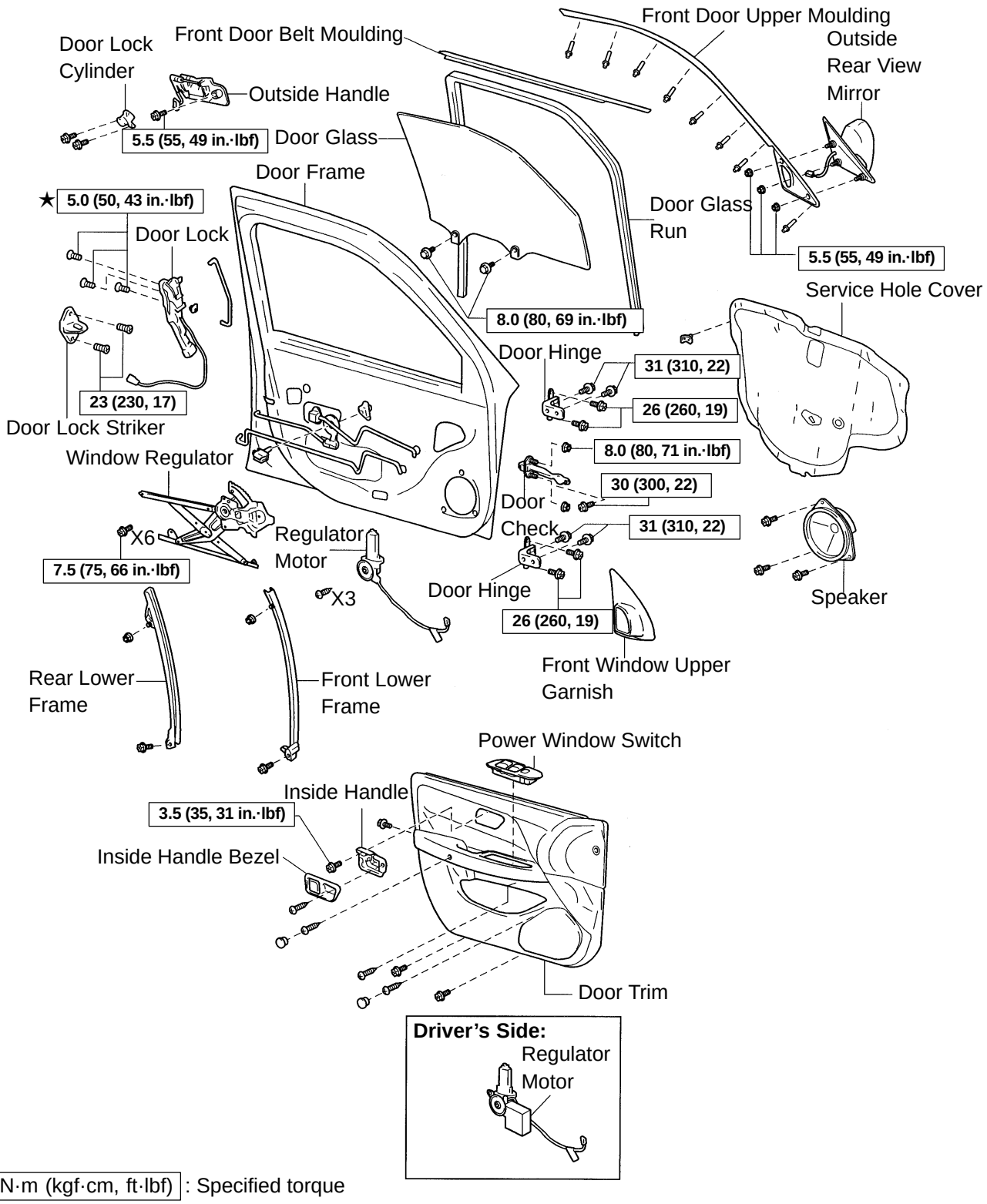

N·m (kgf·cm, ft·lbf) : Specified torque

★ Precoated part

H01975

BO0L3–01

DISASSEMBLY

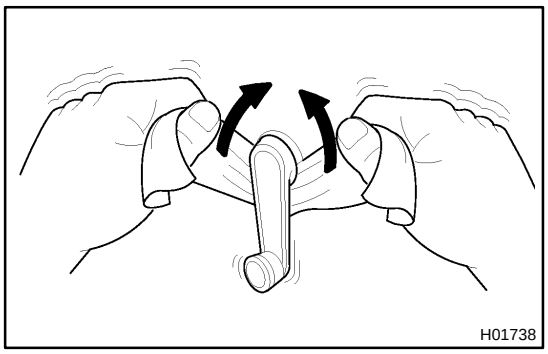

1. w/o Power Window:
REMOVE REGULATOR HANDLE

Pull off the snap ring with a shop rag and remove the regulator handle and plate.

HINT:

At the time of assembly, please refer to the following item.

With the door window fully closed, install the plate and the regulator handle with the snap ring.

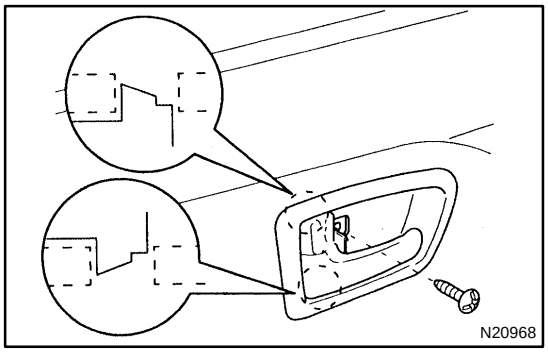

2. REMOVE INSIDE HANDLE BEZEL

(a) Using a screwdriver, pry open the screw cover and remove the screw.

HINT:

Tape the screwdriver tip before use.

(b) Using a screwdriver, pry out the bezel.

HINT:

Tape the screwdriver tip before use.

3. REMOVE FRONT WINDOW UPPER GARNISH

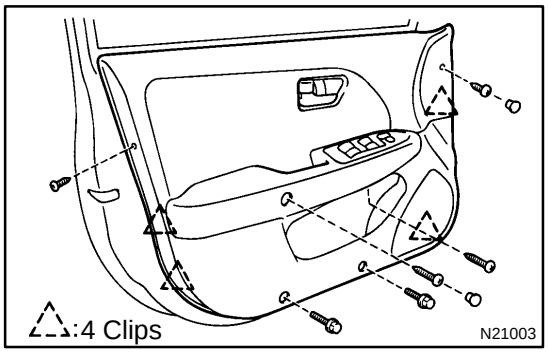

4. REMOVE DOOR TRIM

(a) Using a screwdriver, remove the screw caps.

HINT:

Tape the screwdriver tip before use.

(b) Remove the 2 clips, 2 screws and 2 bolts.

(c) Insert a screwdriver between the door and door trim to pry out.

(d) Pull the trim upward to remove it, then remove the power window switch and disconnect the harness connector.

5. REMOVE THESE PARTS:

(a) Outside rear view mirror
Torque: 5.5 N·m (55 kgf·cm, 49 in.·lbf)

(b) Speaker

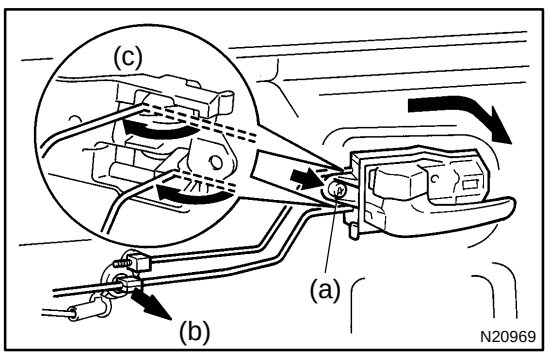

6. REMOVE DOOR INSIDE HANDLE

(a) Remove the screw and pull the handle forward.
Torque: 3.5 N·m (35 kgf·cm, 31 in.·lbf)

(b) Remove the link from the clamp.

(c) Remove the inside handle from the ends of the 2 links.

7. REMOVE SERVICE HOLE COVER

Remove the grommet, then remove the service hole cover.

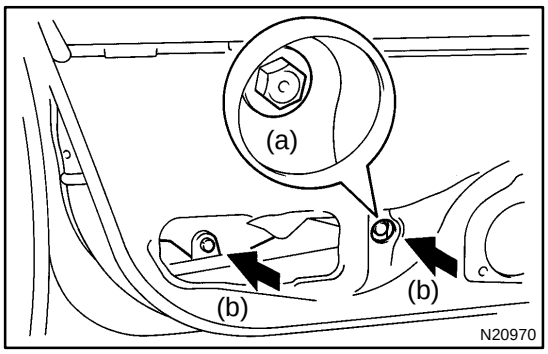

8. REMOVE DOOR GLASS

(a) Open the door glass until the bolt appears in the service hole.

(b) Remove the 2 bolts and the door glass.

HINT:

Pull the glass upward.

Torque: 8.0 N·m (80 kgf·cm, 71 in.·lbf)

9. REMOVE GLASS RUN

HINT:

Pull the glass run upward.

10. REMOVE FRONT AND REAR SIDE FRAMES

Remove the 2 bolts, 2 nuts and the side frames.

HINT:

Remove the side frames through the service hole.

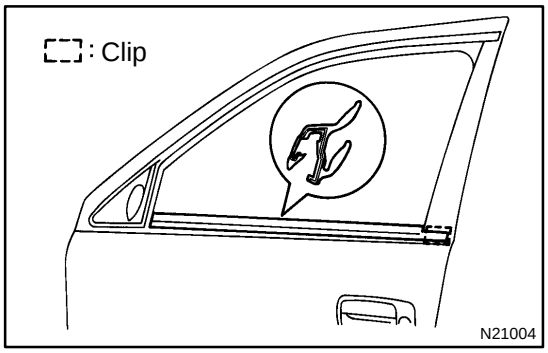

11. REMOVE FRONT DOOR BELT MOULDING

Pry the rearward end of the front door belt moulding from the door and remove the moulding.

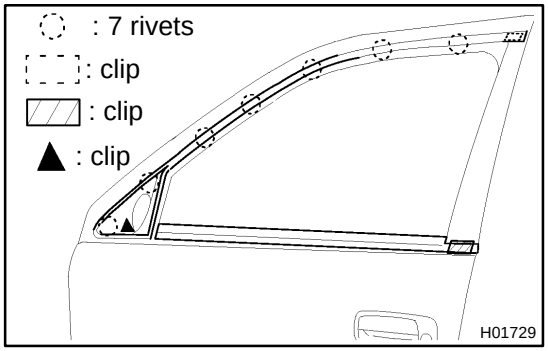

12. REMOVE FRONT DOOR UPPER MOULDING

(a) Using a drill, cut the flange portion of the 7 rivets.

HINT:

At the time of assembly, please refer to the following item.

Use 7 new rivets.

(b) Pry out the 2 clips and remove the moulding.

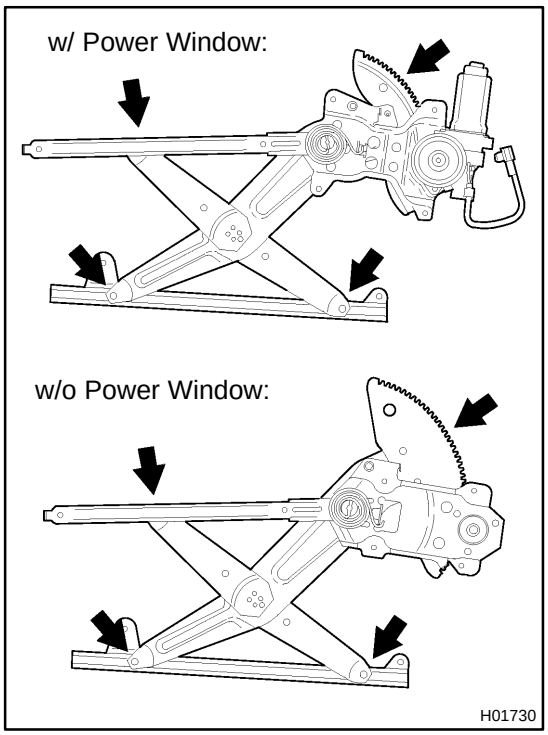

13. REMOVE WINDOW REGULATOR ASSEMBLY

Remove the bolts and window regulator.

Torque: 5.5 N·m (55 kgf·cm, 49 in.·lbf)

HINT:

At the time of reassembly, please refer to the following item.

Apply MP grease to the window regulator rollers.

14. w/ Power Window:

REMOVE MOTOR FROM WINDOW REGULATOR

Remove the 3 screws and motor.

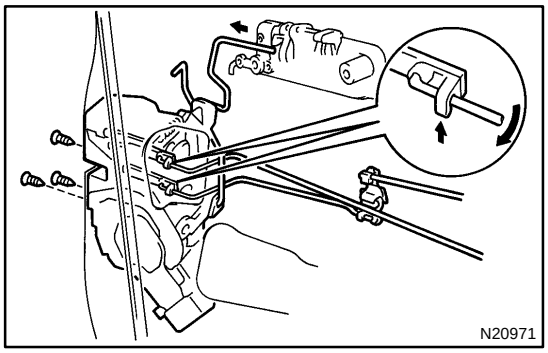

15. REMOVE DOOR LOCK

(a) Remove the 2 clips.

(b) Disconnect the 2 links from the door lock and remove the links.

(c) Disconnect the 2 links from the outside handle and the lock cylinder.

(d) Remove the 3 screws and door lock.

HINT:

At the time of reassembly, please refer to the following item.

Apply adhesive to 3 screws.

Part No. 08833–00070, THREE BOND 1324 or equivalent

Torque: 5.0 N·m (50 kgf·cm, 43 in.·lbf)

(e) w/ Power Door Lock:
Disconnect the connector.

(f) Remove the door lock through the service hole.

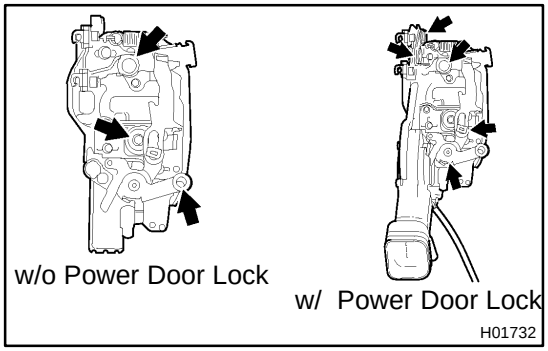

HINT:

At the time of reassembly, please refer to the following item.

Apply MP grease to the sliding surface of the door lock.

16. REMOVE OUTSIDE HANDLE

Torque: 7.0 N·m (70 kgf·cm, 61 in.·lbf)

BO0L4–01

ADJUSTMENT

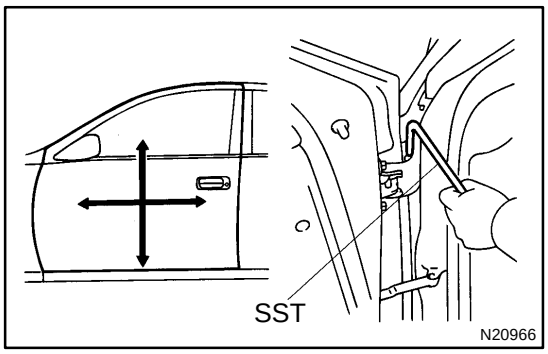

1. ADJUST DOOR IN FORWARD/REARWARD AND VERTICAL DIRECTIONS

Using SST, adjust the door by loosening the body side hinge bolts.

SST 09812–00020

Torque: 31 N·m (310 kgf·cm, 22 ft·lbf)

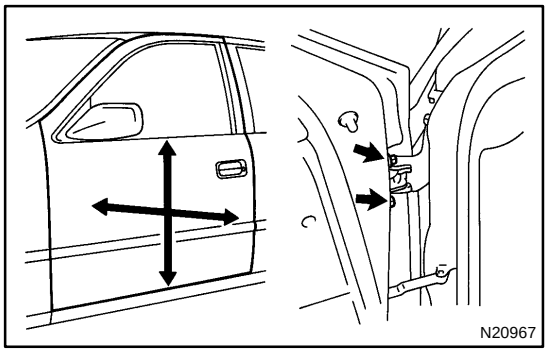

2. ADJUST DOOR IN LEFT/RIGHT AND VERTICAL DIRECTIONS

To adjust, loosen the door side hinge.

HINT:

Substitute the bolt and washer for the centering bolt.

Torque: 26 N·m (260 kgf·cm, 19 ft·lbf)

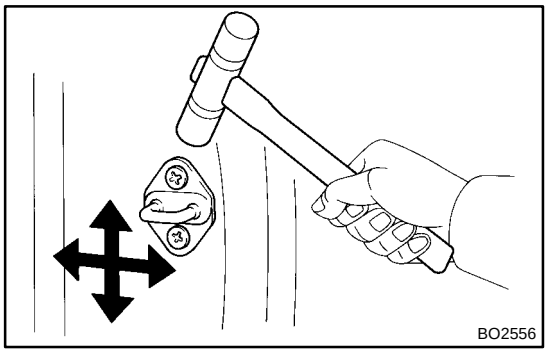

3. ADJUST DOOR LOCK STRIKER

(a) Check that door fits and the door lock linkages are adjusted correctly.

(b) Loosen the striker mounting screws to adjust.

(c) Using a plastic hammer, tap the striker to adjust it.

Torque: 23 N·m (230 kgf·cm, 17 ft·lbf)

REAR DOOR

COMPONENTS

BO0L6–01

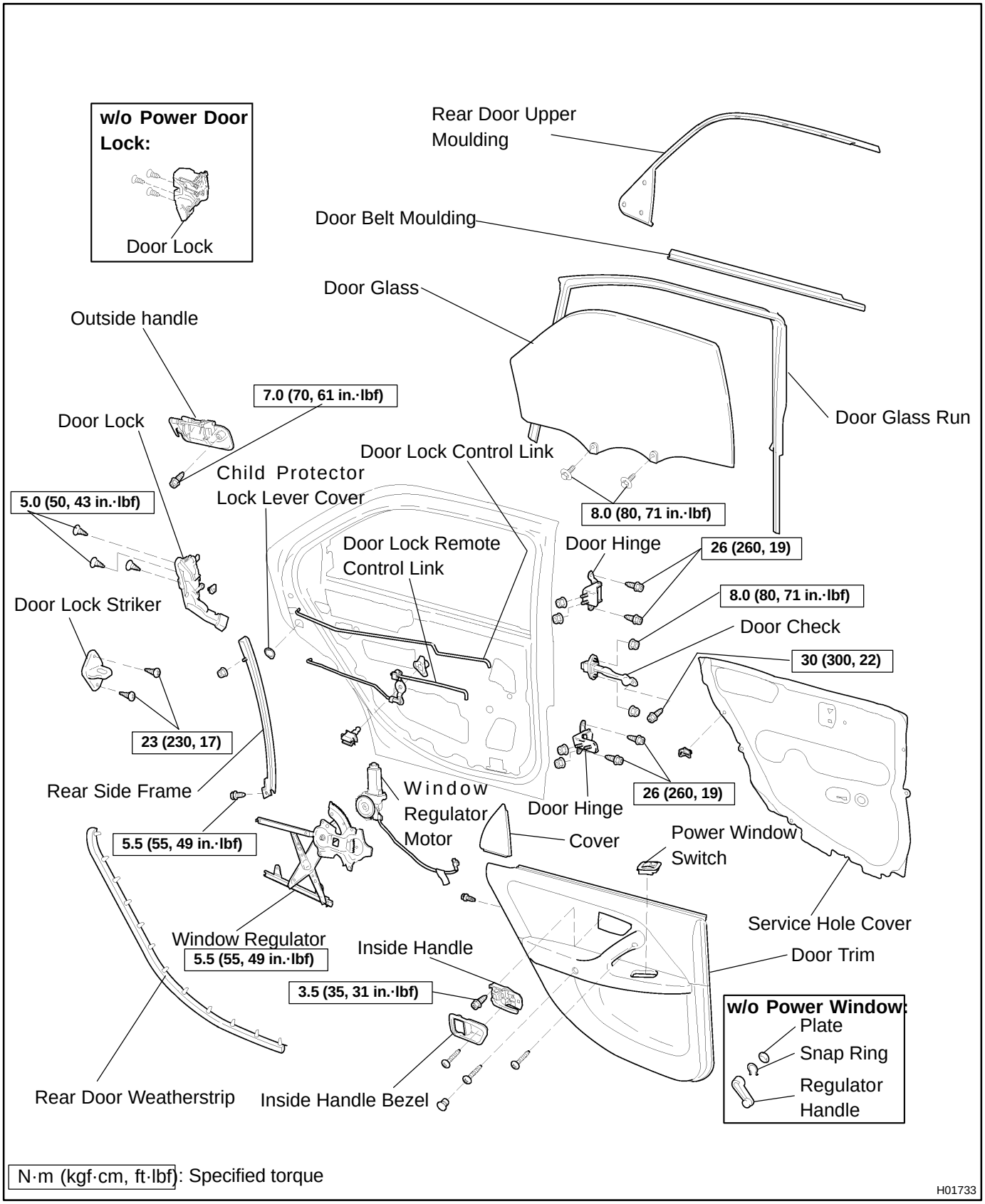

BO0L8–01

DISASSEMBLY

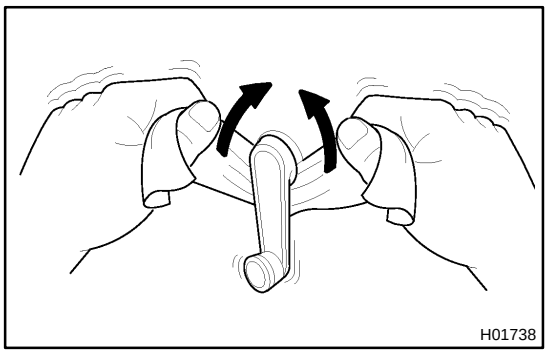

1. w/o Power Window:

REMOVE REGULATOR HANDLE

Pull off the snap ring with a shop rag and remove the regulator handle and plate.

HINT:

At the time of reassembly, please refer to the following item.

With the door window fully closed, install the plate and the regulator handle with the snap ring.

2. w/ Power Window:

REMOVE POWER WINDOW SWITCH

Using a screwdriver, pry out the switch, then disconnect the connector.

HINT:

Tape the screwdriver tip before use.

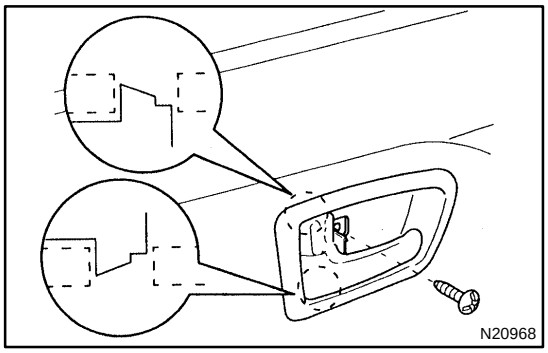

3. REMOVE INSIDE HANDLE BEZEL

(a) Using a screwdriver, pry open the screw cover and remove the screw.

HINT:

Tape the screwdriver tip before use.

(b) Using a screwdriver, pry out the bezel.

HINT:

Tape the screwdriver tip before using. Use the screwdriver to release the bezel from the top and bottom protrusions on the handle assembly as shown.

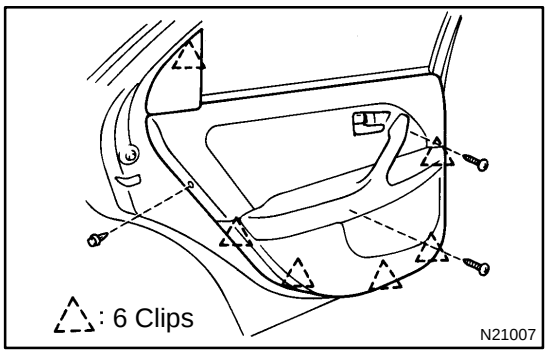

4. REMOVE DOOR TRIM

HINT:

Tape a screwdriver tip before use.

(a) Using the screwdriver, remove the 2 screw caps.

(b) Remove the inside cover.

(c) Remove the 2 screws and clip.

(d) Insert the screwdriver between the door and door trim to pry out.

(e) Pull the trim upward to remove it, then disconnect the connector.

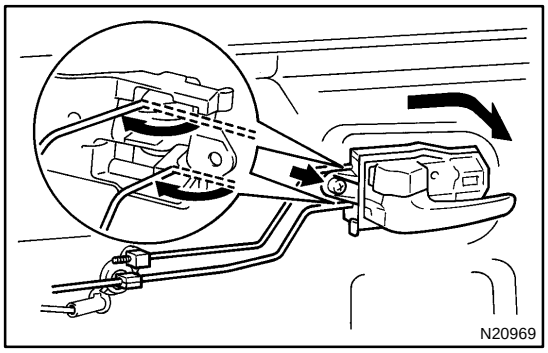

5. REMOVE DOOR INSIDE HANDLE

(a) Remove the screw and pull the handle forward.

Torque: 3.5 N·m (35 kgf·cm, 31 in.·lbf)

(b) Remove the link from the clamp.

(c) Remove the inside handle from the ends of the 2 links.

6. REMOVE SERVICE HOLE COVER

Remove the grommet, then remove the service hole cover.

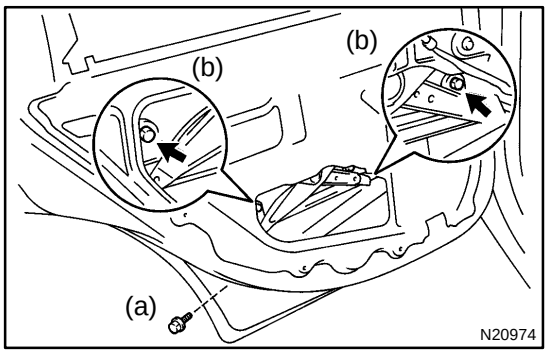

7. REMOVE DOOR GLASS AND RUN

(a) Remove the bolt and nut holding the rear side frame to the door.

(b) Remove the 2 bolts holding the door glass to the window regulator.

Torque: 8.0 N·m (80 kgf·cm, 71 in.·lbf)

(c) Remove the rear side frame and the rear section of the door glass run.

Torque: 5.5 N·m (55 kgf·cm, 49 in.·lbf)

HINT:

Pull the door glass run upward.

(d) Remove the door glass.

(e) Remove the entire door glass run.

HINT:

Pull the door glass run upward.

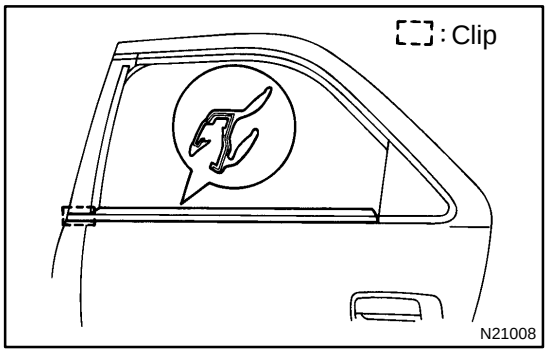

8. REMOVE REAR DOOR BELT MOULDING

Pry the rearward end of the rear door belt moulding from the door and remove the moulding.

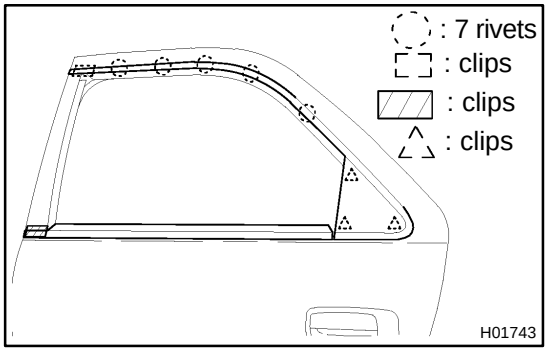

9. REMOVE REAR DOOR UPPER MOULDING

(a) Using a drill, cut the flange portion of the 5 rivets.

HINT:

Use 5 new rivets.

(b) Insert a screwdriver between the door and the rear door upper moulding and pry it off.

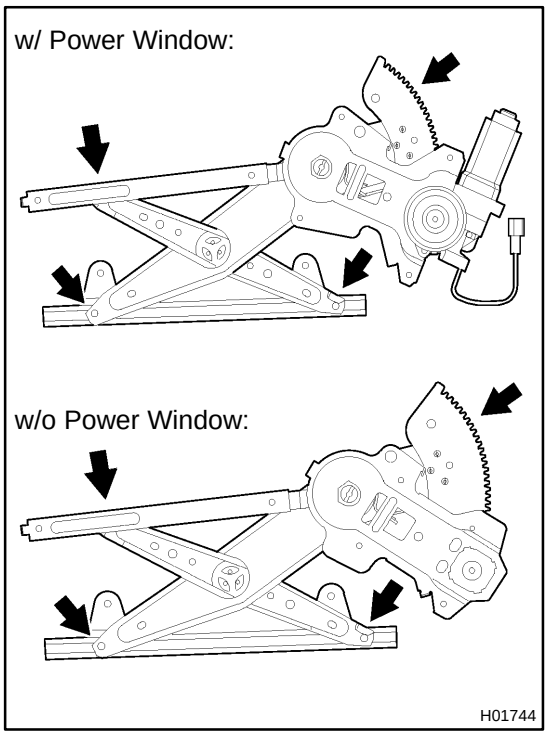

10. REMOVE WINDOW REGULATOR ASSEMBLY

Remove the bolts and window regulator assembly.

Torque: 5.5 N·m (55 kgf·cm,49 in.·lbf)

HINT:

At the time of reassembly, please refer to the following item.

Apply MP grease to the window regulator rollers.

11. w/ Power Window:
REMOVE MOTOR FROM WINDOW REGULATOR

Remove the 3 screws and motor.

12. REMOVE REAR DOOR LOCK CHILD PROTECTION COVER

Using a screwdriver, pry out the cover.

HINT:

Tape the screwdriver tip before use.

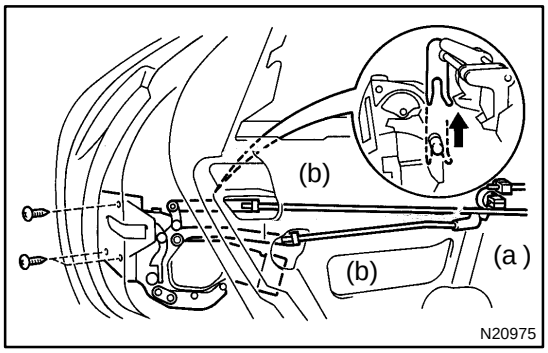

13. REMOVE DOOR LOCK

(a) Remove the clip.

(b) Disconnect the 2 links from the door lock and remove the 2 links.

(c) Disconnect the link from the outside handle.

(d) Remove the 3 screws.

Torque: 5.0 N·m (50 kgf·cm, 43 in.·lbf)

HINT:

At the time of reassembly, please refer to the following item.

Apply adhesive to the 3 screws.

Part No. 08833–00070, THREE BOND 1324 or equivalent

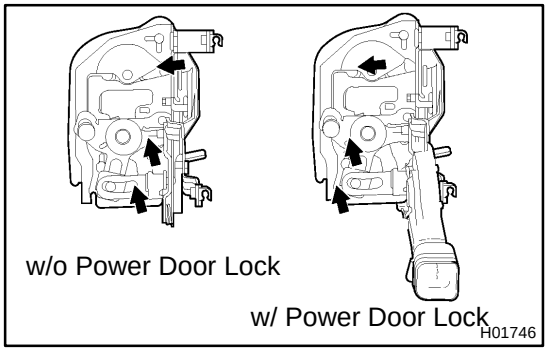

(e) w/ Power Door Lock:
Disconnect the connector.

(f) Remove the door lock through the service hole.

HINT:

At the time of reassembly, please refer to the following item.

Apply MP grease to the sliding surface of the door lock.

14. REMOVE OUTSIDE HANDLE

Torque: 7.0 N·m (70 kgf·cm, 61 in.·lbf)

BO0L7–01

ADJUSTMENT

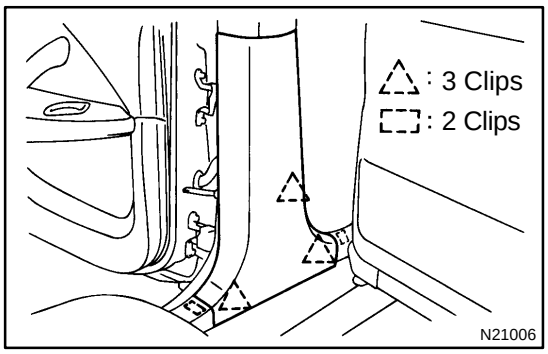

1. ADJUST DOOR IN FORWARD/REARWARD AND VERTICAL DIRECTION

(a) Remove the front part of the rear seat side garnish.
(b) Remove the rear part of the front door inside scuff plate.
(c) Remove the center pillar lower garnish.

HINT:

Pull both sides of the top and bottom part of the garnish outward, then pull out to remove the garnish.

(d) Loosen the body side hinge nuts to adjust.
Torque: 26 N·m (260 kgf·cm, 19 ft·lbf)
(e) Install center pillar lower garnish.
(f) Install front door inside scuff plate.
(g) Install rear seat side garnish.

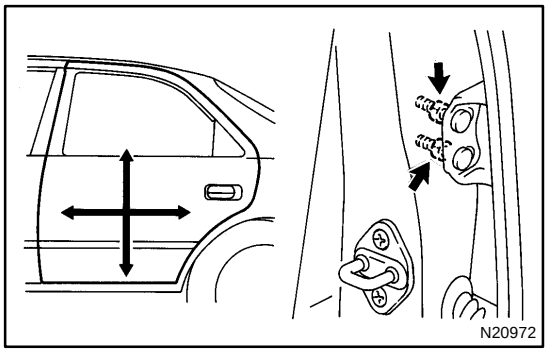

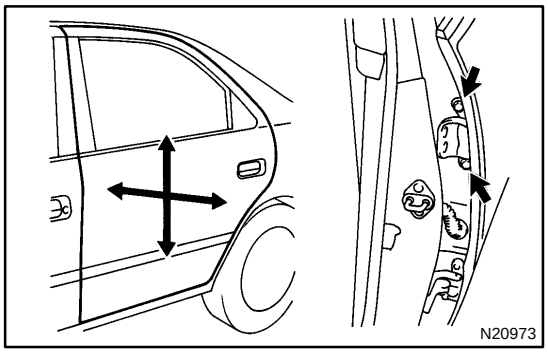

2. ADJUST DOOR IN LEFT/RIGHT AND VERTICAL DIRECTIONS

Loosen the door side hinge bolts to adjust.

HINT:

Substitute a bolt with washer for the centering bolt.

Torque: 26 N·m (260 kgf·cm, 19 ft·lbf)

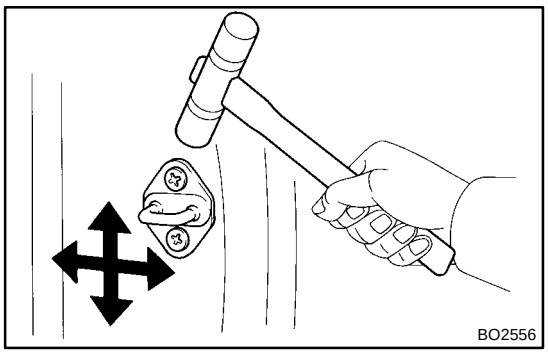

3. ADJUST DOOR LOCK STRIKER

(a) Check that the door fit and door lock linkages are adjusted correctly.
(b) Loosen the striker mounting screws to adjust.
Torque: 23 N·m (230 kgf·cm, 17 ft·lbf)
(c) Using a plastic hammer, tap the striker to adjust it.

INSTRUMENT PANEL

COMPONENTS

BO0MB–01

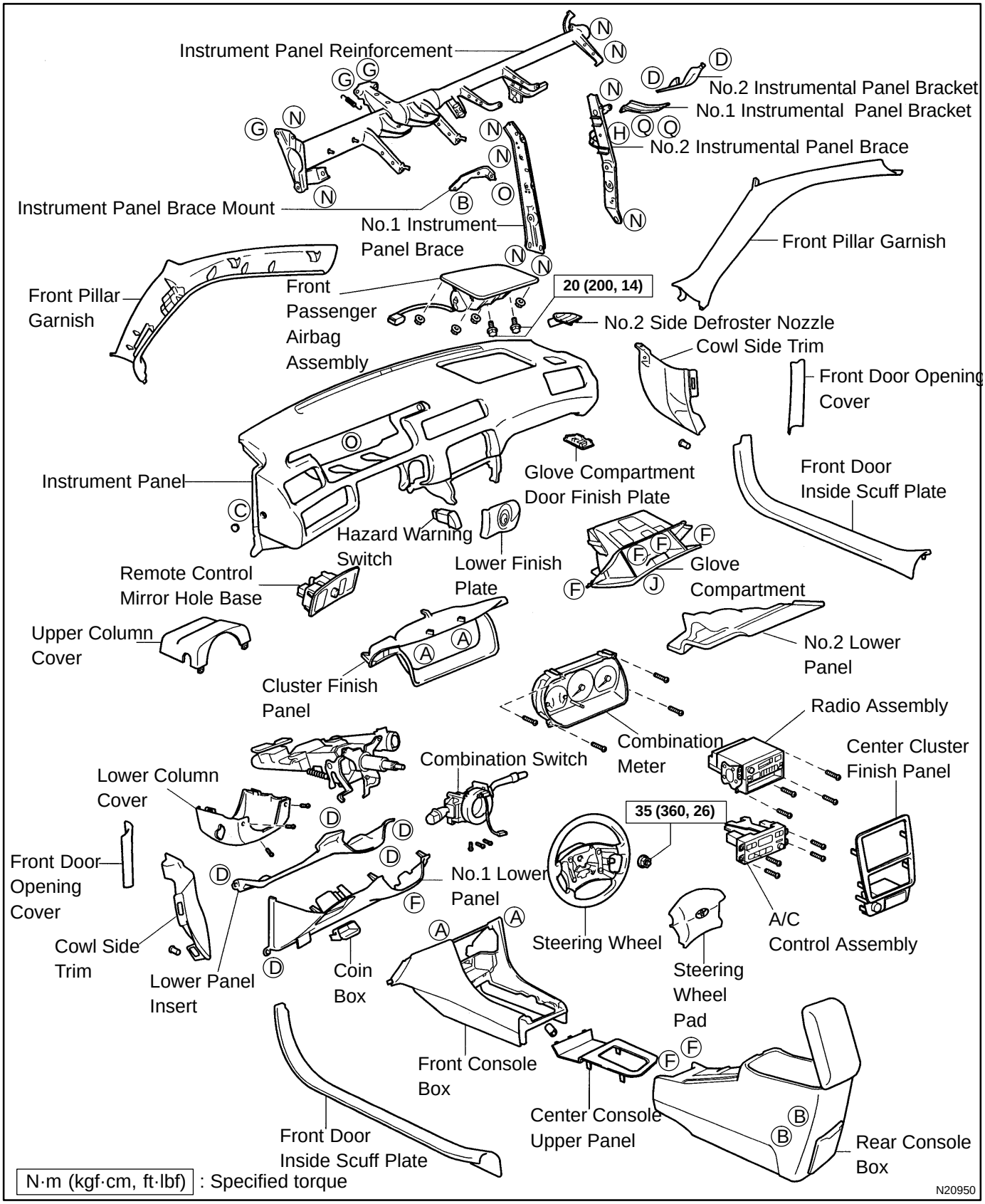

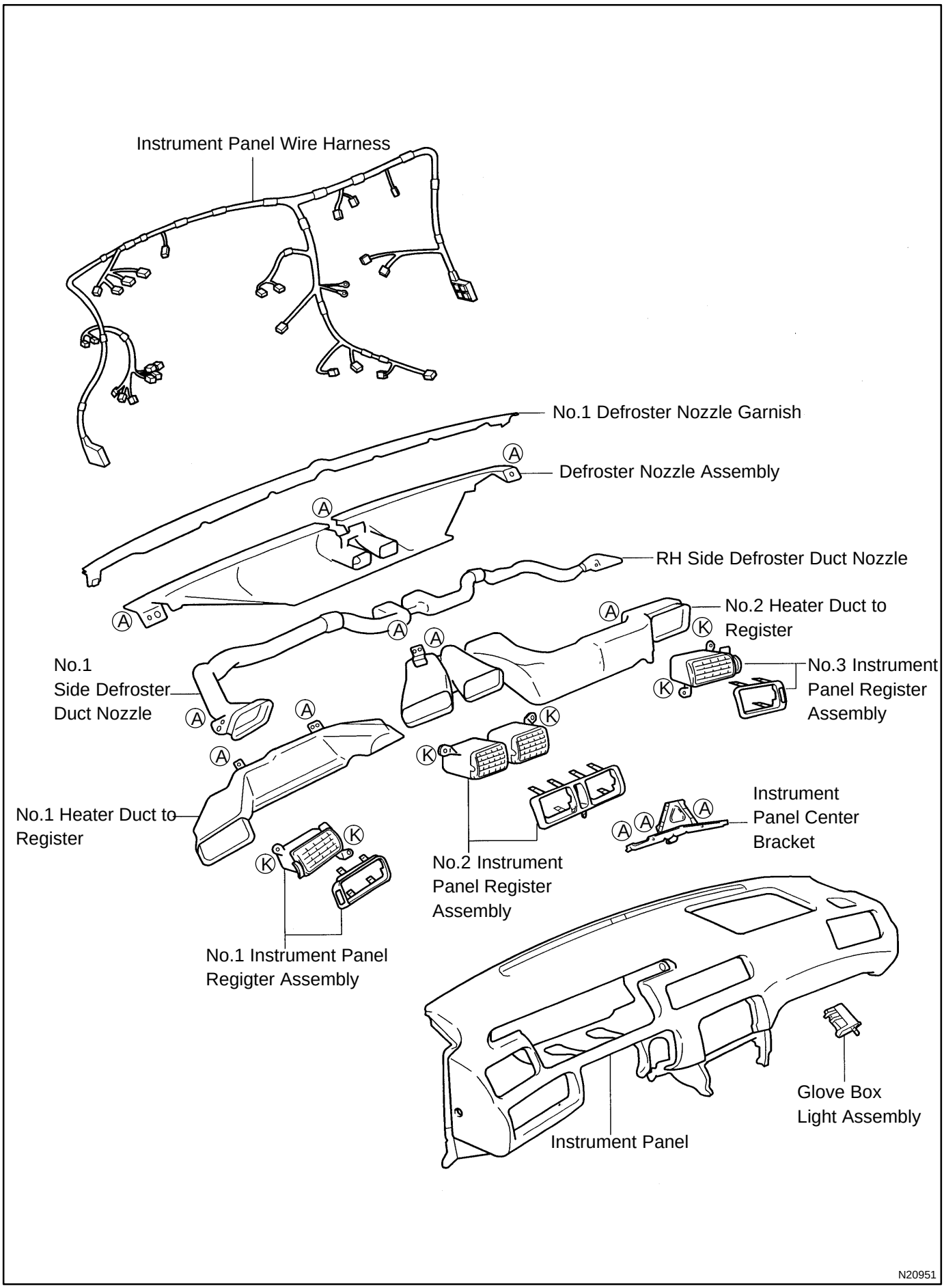
Instrument Panel Wire Harness
No.1 Defroster Nozzle Garnish
Defroster Nozzle Assembly
RH Side Defroster Duct Nozzle
No.2 Heater Duct to Register
No.3 Instrument Panel Register Assembly
No.1 Side Defroster Duct Nozzle
No.1 Heater Duct to Register
Instrument Panel Center Bracket
No.2 Instrument Panel Register Assembly
No.1 Instrument Panel Regigter Assembly
Glove Box Light Assembly
Instrument Panel
N20951

HINT:
Screw shapes and size are indicated in the table below. The code (”A”–”P”) correspond to those indicated on the previous page.

mm (in.)

Code	Shape	Size	Code	Shape	Size	Code	Shape	Size
A		ø = 5.2 (0.21) L = 16 (0.63)	B		ø = 6.0 (0.24) L = 16 (0.63)	C	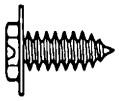	ø = 6.0 (0.24) L = 20 (0.79)
D	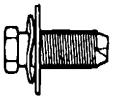	ø = 6.0 (0.24) L = 20 (0.79)	E		ø = 5.0 (0.20) L = 10 (0.39)	F	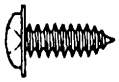	ø = 5.2 (0.21) L = 20 (0.79)
G	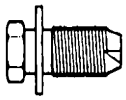	ø = 8.0 (0.31) L = 22 (0.87)	H	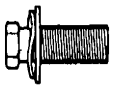	ø = 6.0 (0.24) L = 20 (0.79)	I	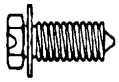	ø = 6.0 (0.24) L = 20 (0.79)
J		ø = 6.0 (0.24) L = 18 (0.79)	K		ø = 5.0 (0.20) L = 14 (0.55)	L		ø = 5.0 (0.20) L = 12 (0.47)
M	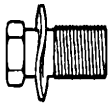	ø = 8.0 (0.31) L = 18 (0.17)	N		8 x 1.25	O		6 x 1.00
P		6 x 1.00						

H01983

BO0MC–02

REMOVAL

1. REMOVE THESE PARTS:

HINT:

Tape a screwdriver tip before use.

(a) Front door inside scuff plates
(b) Cowl side trims
(c) Front pillar garnishes
(d) Front door opening covers
(e) Lower finish plate

2. REMOVE STEERING WHEEL
(See page SR–11)

3. REMOVE STEERING COLUMN COVERS

(a) Remove the steering tilt handle.
(b) Remove the 3 screws, then the upper and lower column covers.

4. REMOVE COMBINATION SWITCH

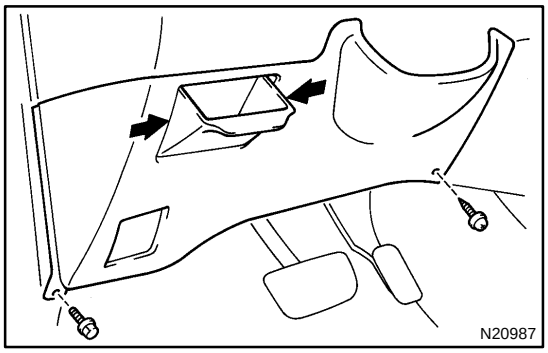

5. REMOVE No.1 LOWER PANEL

(a) Remove the 2 screws and hood lock release lever.
(b) Press on the sides of the coin box while pulling the coin box outward, and remove the coin box.
(c) Remove the screw, bolt and the No.1 lower panel.

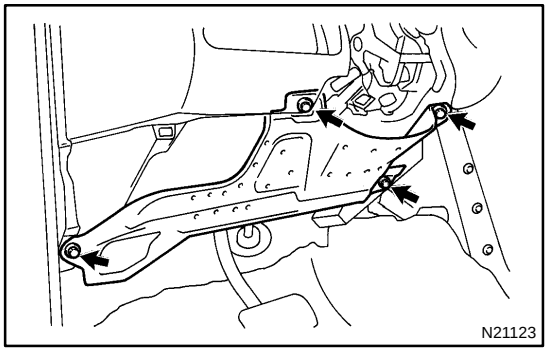

6. REMOVE LOWER PANEL INSERT

(a) Remove the 2 screws holding the DLC3 to the LH lower panel.
(b) Remove the 4 bolts, and the panel.

7. REMOVE No.2 LOWER COVER

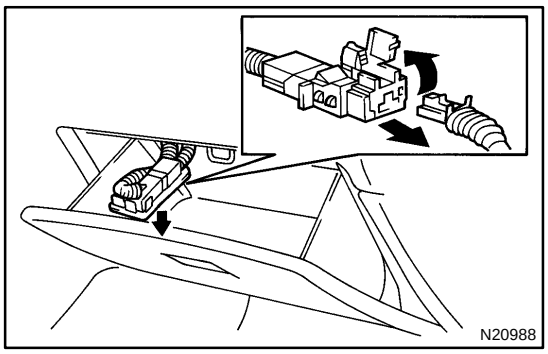

8. REMOVE GLOVE COMPARTMENT ASSEMBLY

(a) Using a screwdriver, remove the glove compartment door finish plate to the glove compartment box inside.

NOTICE:

When handling the airbag connector, be careful not to damage the airbag wire harness.

HINT:

Tape the screwdriver tip before use.

(b) Pull up and disconnect the airbag connector.

(c) Remove the 4 screws, bolt and glove compartment assembly.

9. REMOVE CENTER CONSOLE UPPER PANEL

Using a screwdriver, remove the panel, then disconnect the connector.

HINT:

Tape the screwdriver tip before use.

10. REMOVE REAR CONSOLE BOX

Remove the 2 bolts, 2 screws and the console box.

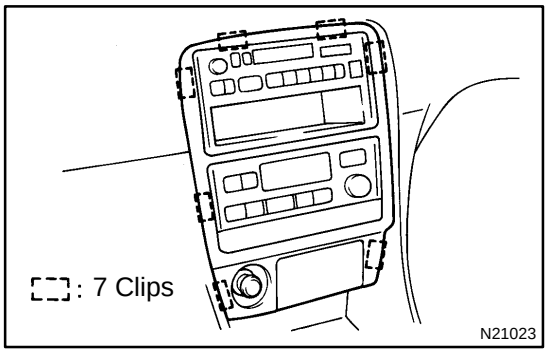

11. REMOVE CENTER CLUSTER FINISH PANEL

Using a screwdriver, remove the panel, then disconnect the connector.

HINT:

Tape the screwdriver tip before using.

12. REMOVE FRONT CONSOLE BOX

Remove the 2 screws and the front console box.

13. REMOVE RADIO ASSEMBLY

14. REMOVE A/C CONTROL ASSEMBLY

(See page AC–88 and AC–95)

15. REMOVE HAZARD WARNING SWITCH

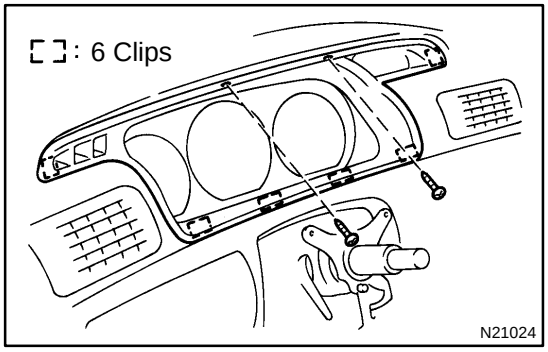

16. REMOVE CLUSTER FINISH PANEL

(a) Remove the 2 screws.

(b) Using a screwdriver, remove the panel.

HINT:

Tape the screwdriver tip before use.

17. REMOVE COMBINATION METER

18. REMOVE REMOTE CONTROL MIRROR HOLE BASE

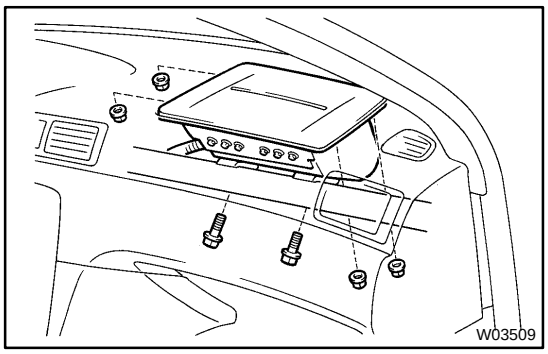

19. REMOVE FRONT PASSENGER AIRBAG ASSEMBLY (See page RS–28)

Remove the 2 bolts, 4 nuts and the front passenger airbag assembly.

Torque:
Bolt: 20 N·m (200 kgf·cm, 14 ft·lbf)

CAUTION:

- **Store the front passenger airbag door facing upward (never downward).**
- **Never disassemble the front passenger airbag assembly.**

NOTICE:

The 2 bolts to the instrument panel have been anti–rust treated. After removing the front passenger airbag assembly, always replace the bolts and nuts with new ones.

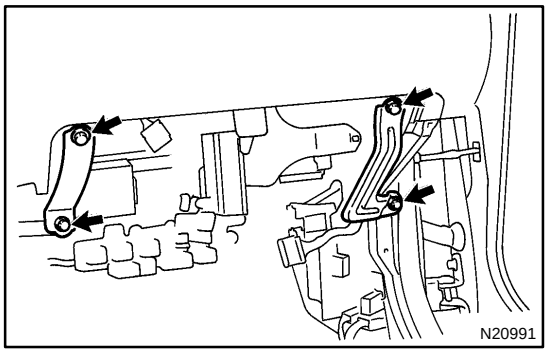

20. REMOVE No.1 AND No.2 INSTRUMENT PANEL BRACKETS

Remove the 4 bolts and the No.1 and No.2 panel brackets.

21. REMOVE NO.2 SIDE DEFROSTER NOZZLE

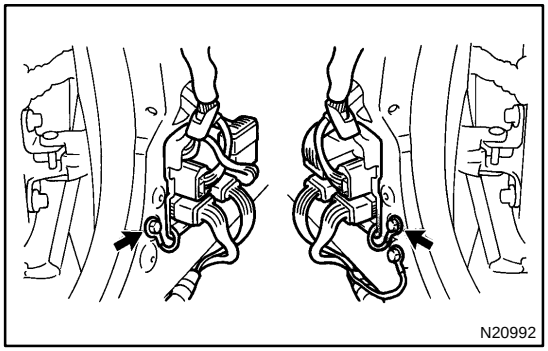

22. REMOVE INSTRUMENT PANEL ASSEMBLY

(a) Disconnect the connectors from the LH and RH connector holders.
(b) Remove the bolts holding the ground wire to the body.
(c) Remove the connector holder from the body.

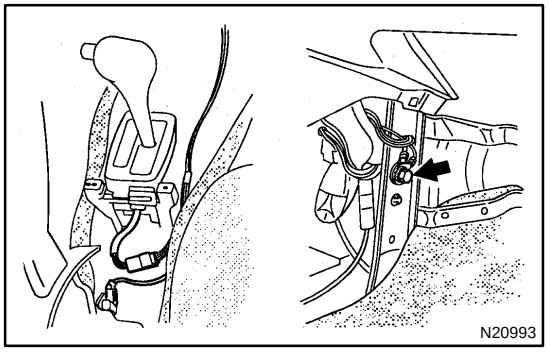

(d) Disconnect the connectors.
(e) Remove the bolt holding the ground wire to the No.2 instrument panel brace.

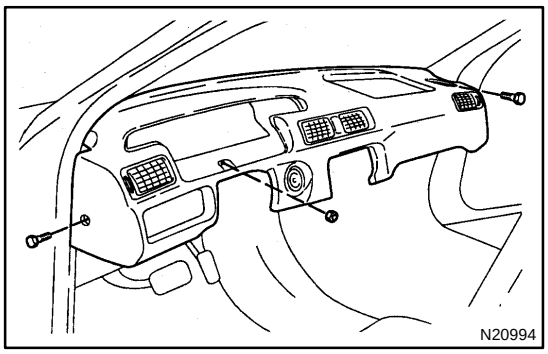

(f) Remove the bolt, nut, screw and the instrument panel assembly.

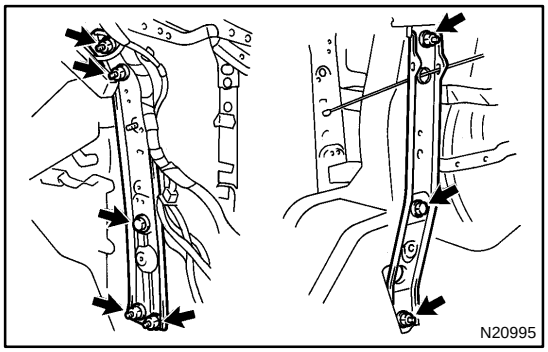

23. REMOVE INSTRUMENT PANEL BRACES

(a) Remove the wire brackets and connector.
(b) Remove the bolt and connector from the No.1 instrument panel brace.
(c) w/ Wireless Control:
Remove the nut and the wireless control unit from the No.1 instrument panel brace.
(d) Remove the nut holding the radio antenna to the No.2 instrument panel brace.
(e) Remove a nut and brace mount bracket.
(f) Remove the 6 nuts, 2 bolts and No.1 and No.2 instrument panel braces.

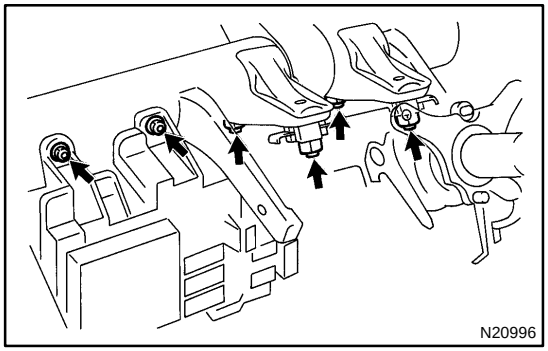

24. REMOVE INSTRUMENT PANEL REINFORCEMENT

(a) Remove the connectors from the steering column tube.
(b) Remove the 4 wire brackets and connectors.
(c) Remove the 2 nuts and bolt holding the No.1 Junction Box (J/B) to the reinforcement.
(d) Remove the 4 nuts and the steering column from the reinforcement.
(e) Remove the brake pedal spring from the reinforcement and brake pedal.

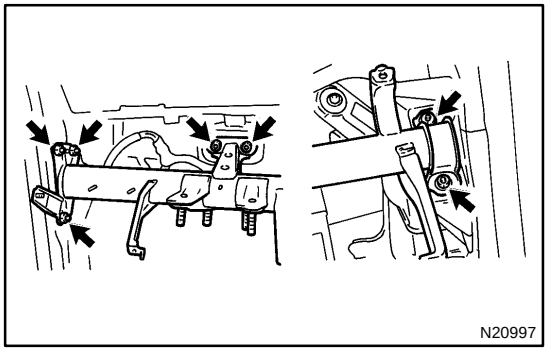

(f) Remove the 4 nuts, 3 bolts and the reinforcement.

BO0MD–01

DISASSEMBLY

1. REMOVE THESE PARTS:

(a) No.1 defroster nozzle garnish
(b) No.1 defroster nozzle
(c) RH side defroster duct nozzle
(d) No.1 side defroster duct nozzle
(e) No.1 heater duct to register
(f) No.2 heater duct to register
(g) No.2 register assembly
(h) No.3 register assembly
(i) No.1 register assembly

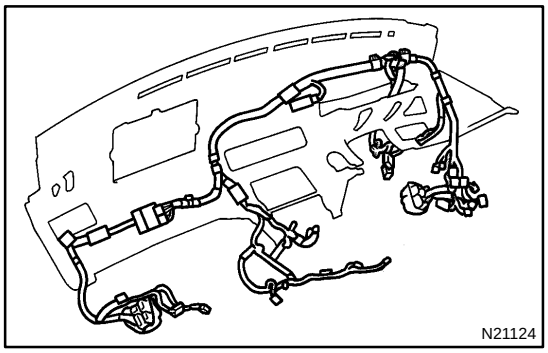
N21124

2. REMOVE INSTRUMENT PANEL WIRE HARNESS

Remove the 2 brackets, 8 clips and wire harness.

3. REMOVE INSTRUMENT PANEL CENTER BRACKET

4. REMOVE THESE PARTS:

(a) Clock unit
(b) Glove box light assembly

HEADLIGHT AND TAILLIGHT SYSTEM

BE0A4–04

LOCATION

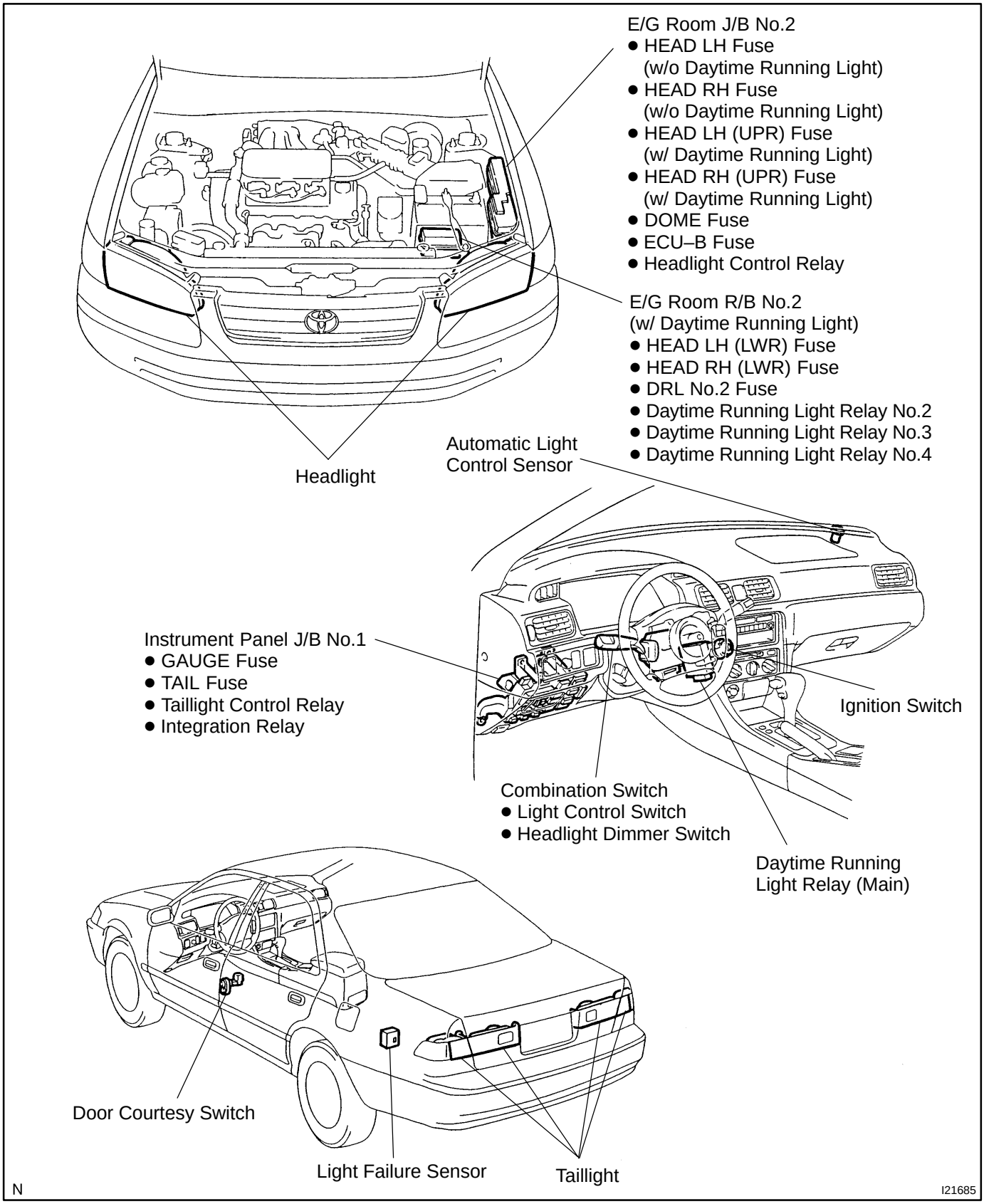

BE0A5–02

COMPONENTS

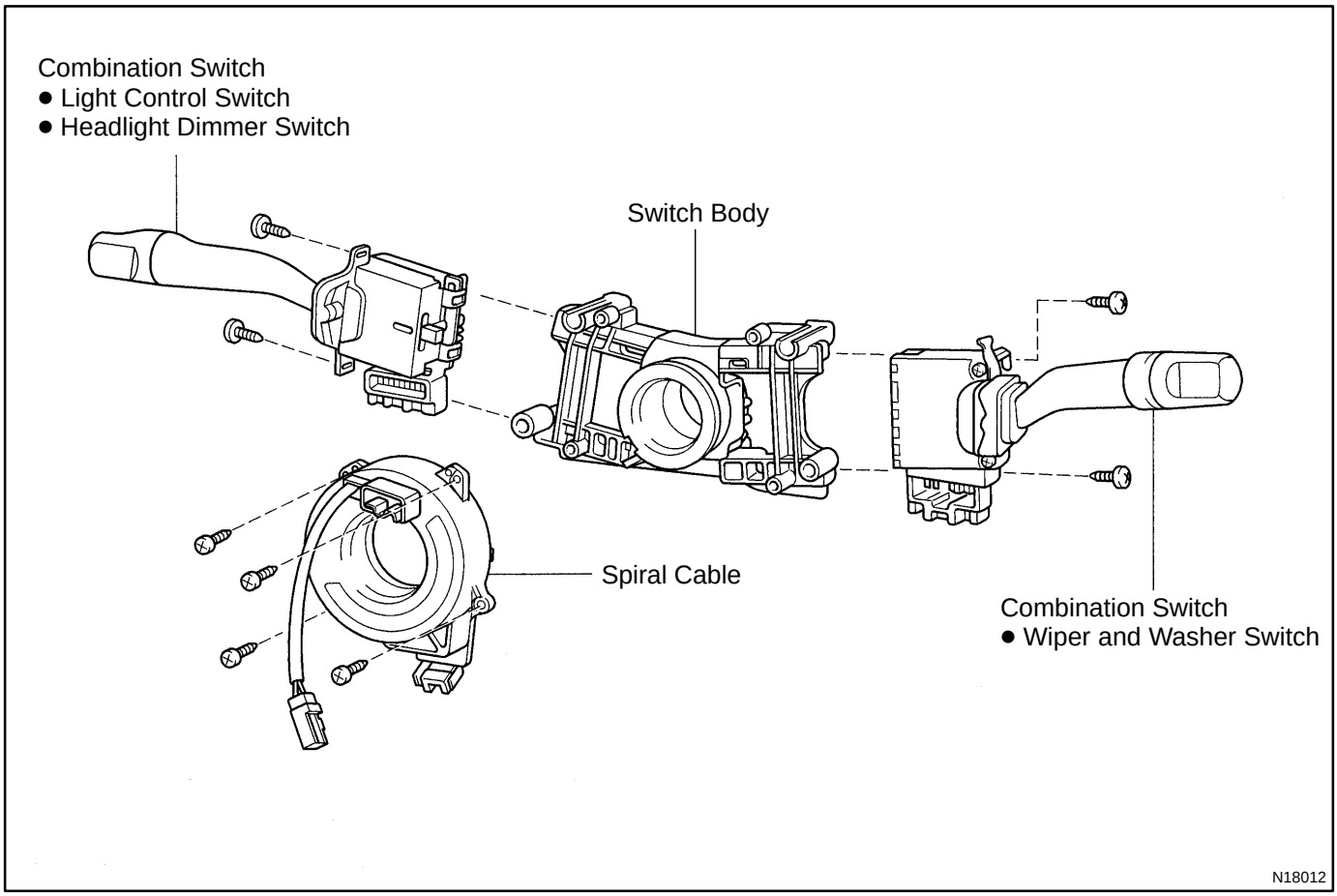

BE10D–02

INSPECTION

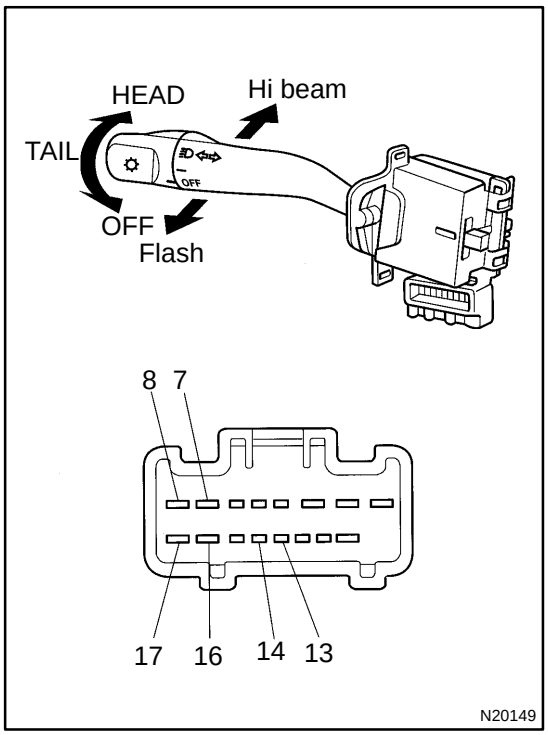

1. INSPECT LIGHT CONTROL SWITCH CONTINUITY

Switch position	Tester connection	Specified condition
OFF	–	No continuity
TAIL	14 – 16	Continuity
HEAD	13 – 14 – 16	Continuity

If continuity is not as specified, replace the switch.

2. INSPECT HEADLIGHT DIMMER SWITCH CONTINUITY

Switch position	Tester connection	Specified condition
Low beam	16 – 17	Continuity
High beam	7 – 16	Continuity
Flash	7 – 8 – 16	Continuity

If continuity is not as specified, replace the switch.

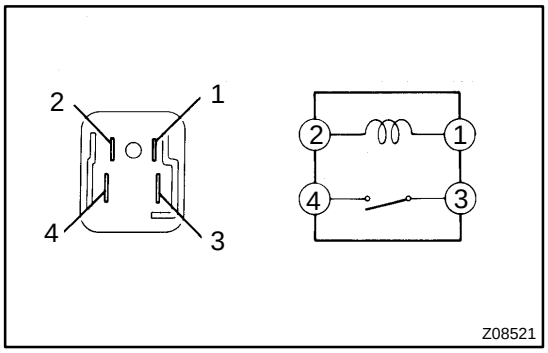

3. INSPECT HEADLIGHT RELAY CONTINUITY

Condition	Tester connection	Specified condition
Constant	1 – 2	Continuity
Apply B+ between terminals 1 and 2.	3 – 4	Continuity

If continuity is not as specified, replace the relay.

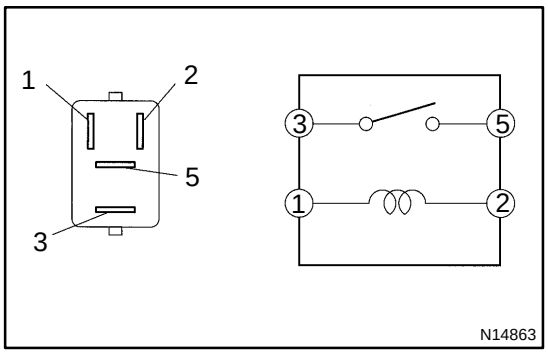

4. INSPECT TAILLIGHT CONTROL RELAY CONTINUITY

Condition	Tester connection	Specified condition
Constant	1 – 2	Continuity
Apply B+ between terminals 1 and 2.	3 – 5	Continuity

If continuity is not as specified, replace the relay.

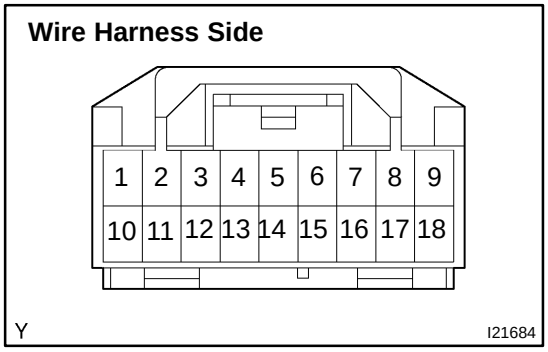

5. w/ Daytime running light system: INSPECT DAYTIME RUNNING LIGHT RELAY (MAIN) CIRCUIT

Disconnect the connector from the relay and inspect the connector on the wire harness side.

Tester connection	Condition	Specified condition
1 – Ground	Constant	Battery positive voltage
2 – Ground	Constant	Battery positive voltage
3 – Ground	Constant	Battery positive voltage
4 – Ground	Light control switch position OFF or HEAD	No voltage
4 – Ground	Light control switch position TAIL	Continuity
5 – Ground	Constant	Battery positive voltage
7 – Ground	Light control switch position OFF or TAIL	No continuity
7 – Ground	Light control switch position HEAD	Continuity
8 – Ground	Headlight dimmer switch position Low beam	No continuity
8 – Ground	Headlight dimmer switch position High beam of Flash	Continuity
9 – Ground	Engine Stop	No voltage
9 – Ground	Engine Running	Battery positive voltage
10 – Ground	Ignition switch position LOCK or ACC	No voltage
10 – Ground	Ignition switch position ON or START	Battery positive voltage
14 – Ground	Constant	Continuity
17 – Ground	Brake fluid level warning position OFF	No continuity
17 – Ground	Brake fluid level warning position ON	Continuity
18 – Ground	Parking brake switch position OFF (Parking brake lever released)	No continuity
18 – Ground	Parking brake switch position ON (Parking brake lever pulled up)	Continuity

If circuit is as specified, try replacing the relay with a new one.
If circuit is not as specified, inspect the circuits connected to other parts.

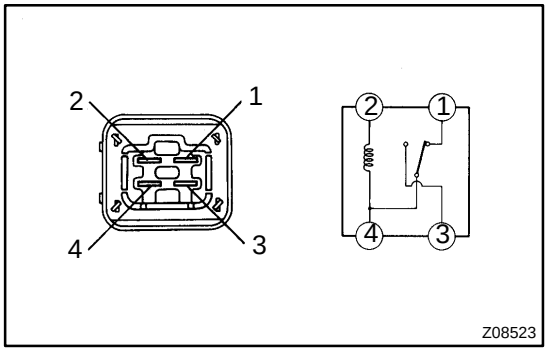

6. w/ Daytime running light system:
INSPECT DAYTIME RUNNING LIGHT NO.2 RELAY CONTINUITY

Condition	Tester connection	Specified condition
Constant	1 – 4, 2 – 4	Continuity
Apply B+ between terminals 2 and 4.	3 – 4	Continuity

If continuity is not as specified, replace the relay.

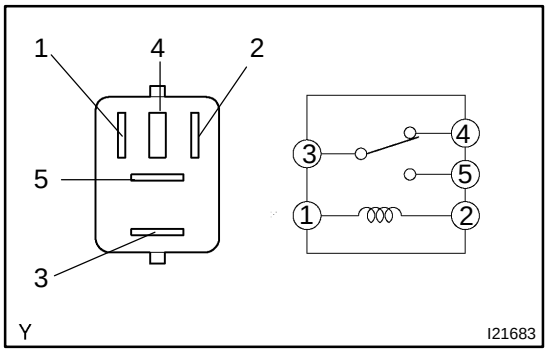

7. w/ Daytime running light system:
INSPECT DAYTIME RUNNING LIGHT NO.3 RELAY-CONTINUITY

Condition	Tester connection	Specified condition
Constant	1 – 2, 3 – 4	Continuity
Apply B+ between terminals 1 and 2.	3 – 5	Continuity

If continuity is not as specified, replace the relay.

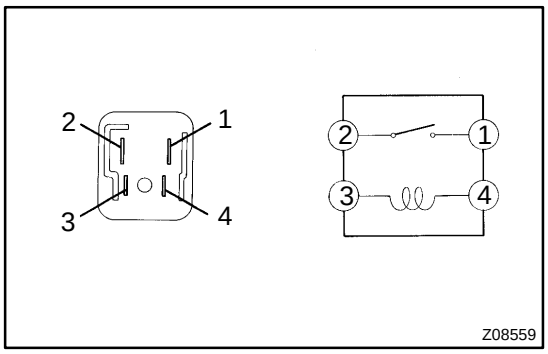

8. w/ Daytime running light system:
INSPECT DAYTIME RUNNING LIGHT NO.4 RELAY CONTINUITY

Condition	Tester connection	Specified condition
Constant	3 – 4	Continuity
Apply B+ between terminals 3 and 4.	1 – 2	Continuity

If continuity is not as specified, replace the relay.

9. INSPECT LIGHT AUTO TURN OFF SYSTEM
(See Integration relay circuit on page BE–14)

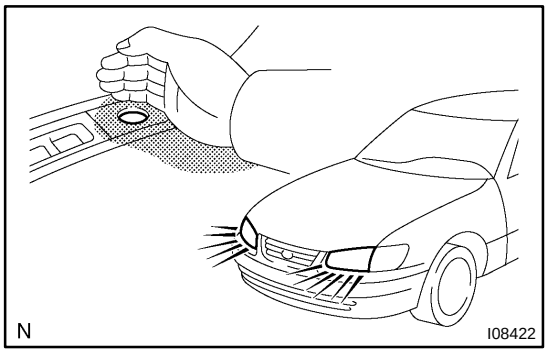

10. w/ Automatic Light Control System:
INSPECT AUTOMATIC LIGHT CONTROL

(a) Turn the ignition switch ON.
(b) Turn the light control switch to OFF.
(c) Parking brake lever released.
(d) Gradually cover the top of the sensor.
(e) Verify that the lights should turn ON the accessory lights and the headlights.

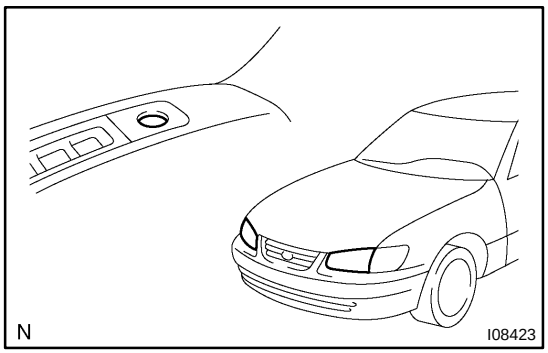

11. w/ Automatic Light Control System:
INSPECT AUTOMATIC LIGHT CONTROL

(a) Gradually expose the sensor.
(b) Verify that the lights should turn OFF the headlights and the accessory lights.

12. w/ Automatic Light Control System:
INSPECT LIGHT–OFF CONDITION

(a) Turn the ignition switch ON.
(b) Gradually cover the top of the sensor.
Lights auto ON:

13. w/ Automatic Light Control System:
INSPECT LIGHTS–ON CONDITION

(a) Open the driver's door while the ignition switch is OFF.
(b) Turn the light control switch to OFF leaving the door open and cover the top of the sensor, and verify that the lights go on when the ignition switch is turned ON.

Wire harness side:

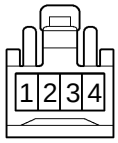

I01254

14. w/ Automatic light control system: INSPECT AUTOMATIC LIGHT CONTROL SENSOR CIRCUIT

Connector disconnected:

Disconnect the connector from the sensor and inspect the connector on the wire harness side, as shown in the table.

Tester connection	Condition	Specified condition
3 – Ground	Constant	Constant
1 – Ground	Ignition switch LOCK or ACC	No voltage
1 – Ground	Ignition switch ON	Battery positive voltage
4 – Ground	Ignition switch LOCK or ACC	No voltage
4 – Ground	Ignition switch ON	5.2 – 9.0 v

If circuit is as specified, perform the inspection on the following page.

If the circuit is not as specified, inspect the circuit connected to other parts.

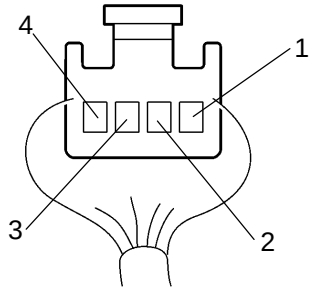

I01255

15. INSPECT AUTOMATIC LIGHT CONTROL SENSOR CIRCUIT

Connector disconnected:

Connect the wire harness side connector to the sensor and inspect wire harness side connector from the back side, as shown.

HINT:

- Ignition switch ON.
- Light control switch OFF.
- Vehicle's surroundings are bright.

Tester connection	Condition	Specified condition
3 – Ground	Constant	Continuity
1 – Ground	Ignition switch LOCK or ACC	No voltage
1 – Ground	Ignition switch ON	9.5 V or more
Vehicle under the direct sun light. (Sensor is not covered)		Taillight and Headlight are ON.

If circuit is as specified, try replacing the sensor with a new one.

If the circuit is not as specified, inspect the circuit connected to other parts.

BE20X–01

ADJUSTMENT

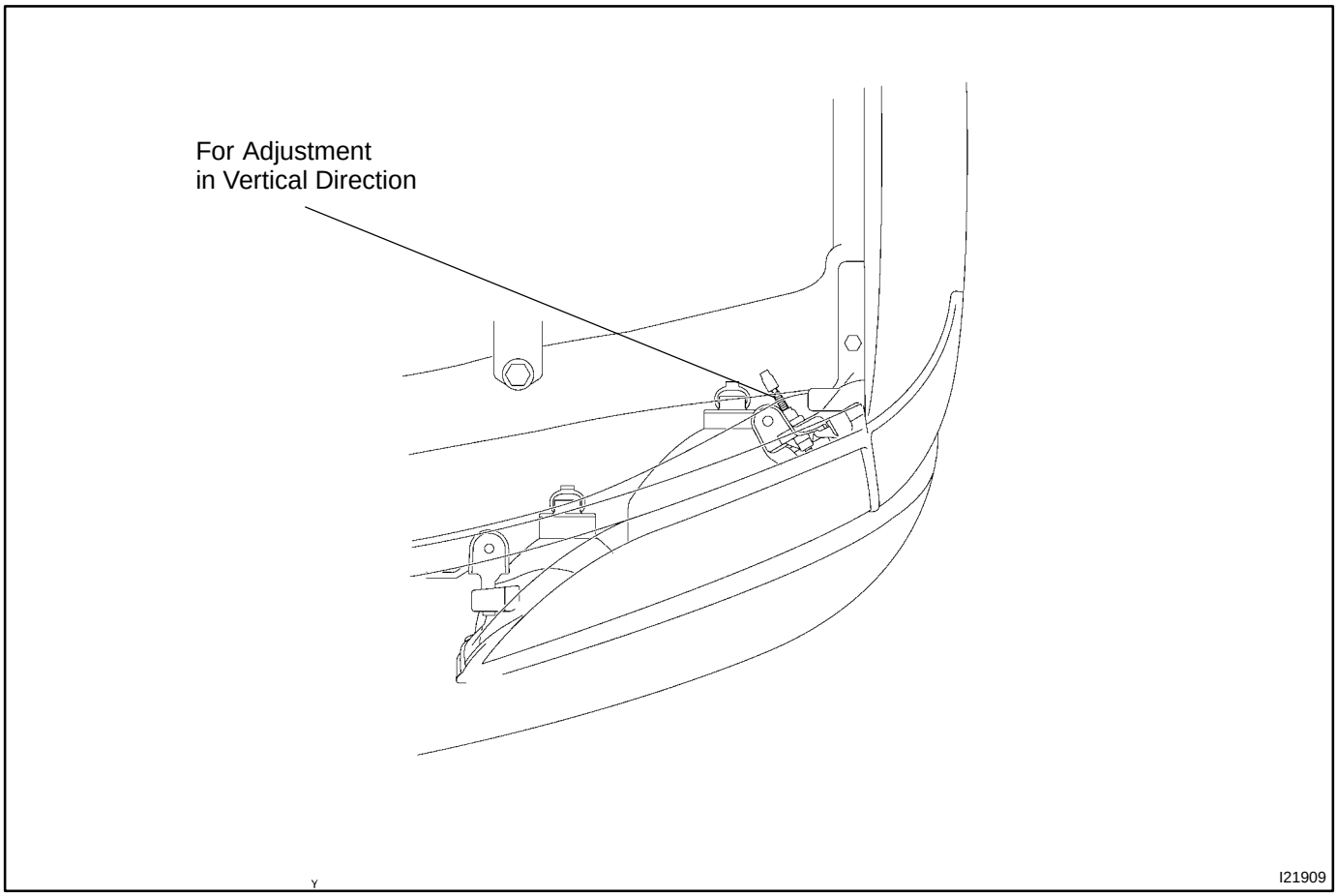

ADJUST HEADLIGHT AIM ONLY

(a) Place the vehicle in the following conditions.
- The area around the headlight is not deformed.
- The vehicle is parked on a level surface.
- Tire inflation pressure is the specified value.
- A driver is in the driver's seat and the vehicle is in a state ready for driving (with a tank full).
- The vehicle has been bounced several times.

(b) Check the headlight aiming.
(1) Prepare a thick white paper.
(2) Stand the paper perpendicular to the ground at the position 9.84 ft away from the headlights.
(3) Ensure that the center line of the vehicle and the paper face forms a 90–degree angle as shown in the illustration.
(4) Draw a horizontal line (H line) on the paper, showing where the headlights should strike.
(5) Draw a vertical line (V line) to where the center line of the vehicle is to be.
(6) Draw 2 vertical lines to where the the headlights should strike (V RH and V LH lines).
(7) Draw a horizontal line (by connecting the both low beam center marks) to where the headlights should strike (H RH and H LH lines).

HINT:

The H RH and H LH line is 0.4° below the horizontal line (H line) of the light axis.

(8) Start the engine.

(9) Turn the headlights ON.
(10) Check that the headlights properly strike the position shown in the illustration.
(11) If not, adjust the lights in the vertical direction.

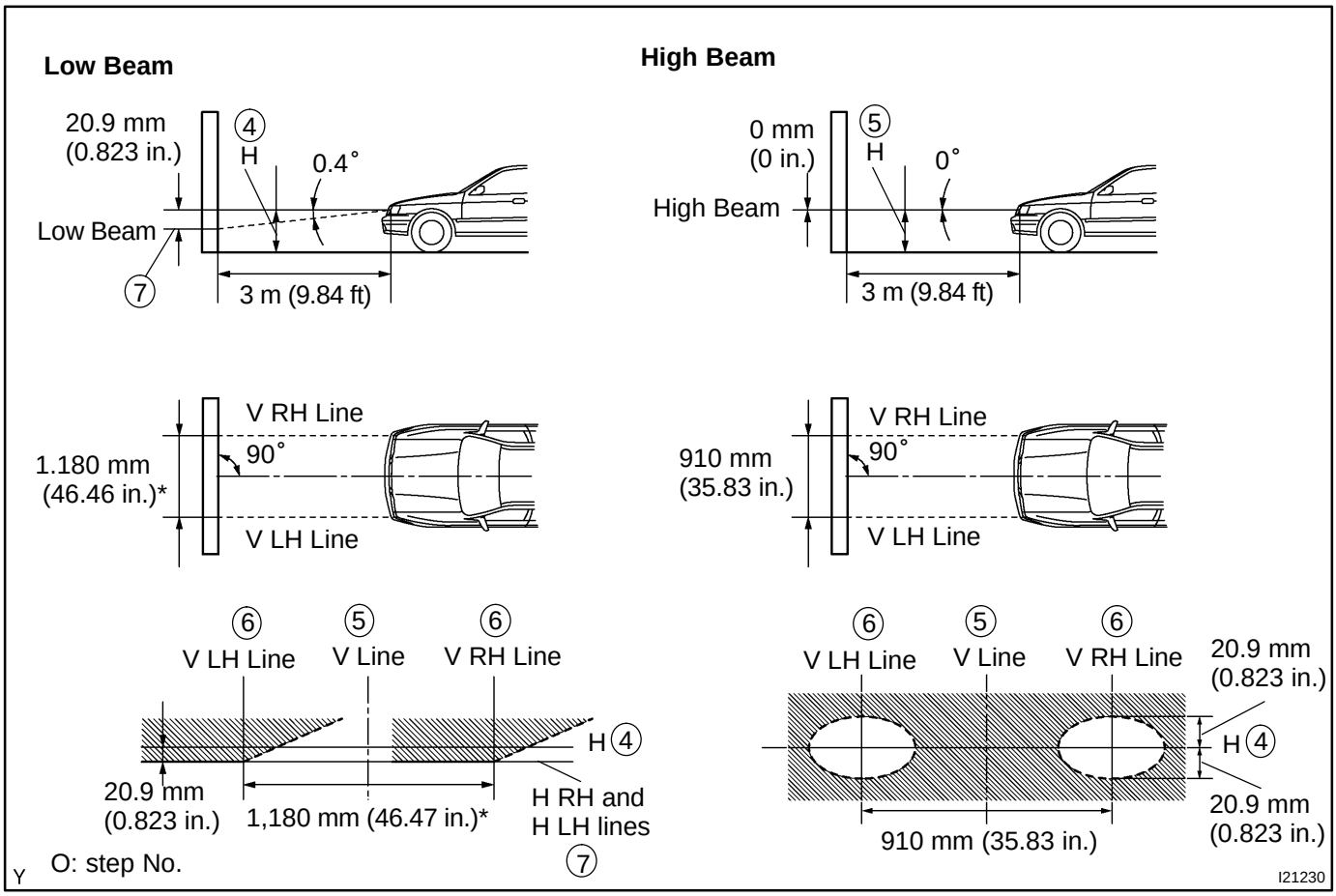

HINT:

- As shown in the illustration, adjust each aim of the RH and LH lights.
- The value of the ”High Beam” aim is a reference value. Since the horizontal direction is impossible to adjust, the value * of the ”Low Beam” aim is also a reference value.

(c) When adjusting it in the vertical direction:
Using adjusting bolt (vertical direction), adjust the headlight aim to within the specified range.

IGNITION SYSTEM

IG0DB–01

ON–VEHICLE INSPECTION

NOTICE:

"Cold" and "Hot" in these sentences express the temperature of the coils themselves. "Cold" is from –10˚C (14˚F) to 50˚C (122˚F) and "Hot" is from 50˚C (122˚F) to 100˚C (212˚F).

1. INSPECT SPARK TEST

Check that the spark occurs.

(1) Disconnect the high–tension cord from the spark plug.
(2) Remove the spark plug.
(3) Install the spark plug to the high–tension cord.
(4) Ground the spark plug.
(5) See if spark occurs while engine is being cranked.

NOTICE:

To prevent gasoline from being injected from injectors during this test, crank the engine for no more than 5 – 10 seconds at time.

If the spark does not occur, do the test as follows:

SPARK TEST

NO

CHECK CONNECTION OF IGNITION COIL WITH IGNITER CONNECTORS → BAD → Connect securely.

OK

CHECK RESISTANCE OF HIGH–TENSION CORDS (See step 2)
Maximum resistance: 25 kΩ per cord → BAD → Replace cord(s).

OK

CHECK POWER SUPPLY TO IGNITION COILS WITH IGNITERS
1. Turn ignition switch to ON.
2. Check that there is battery positive voltage at ignition coil positive (+) terminal.

→ BAD → Check wiring between ignition switch to ignition coils with igniters.

OK

CHECK RESISTANCE OF IGNITION COILS (See step 4)

Resistance:	Cold	Hot
Secondary	9.7 – 16.7 kΩ	12.4 – 19.6 kΩ

→ BAD → Replace ignition coil(s) with igniter(s).

OK

CHECK RESISTANCE OF SENSORS (See steps 5 and 6)

Resistance:	Cold	Hot
Camshaft position sensor	835 – 1,400 Ω	1,060 – 1,645 Ω
Crankshaft position sensor	985 – 1,600 Ω	1,265 – 1,890 Ω

→ BAD → Replace sensor(s).

OK

CHECK IGT SIGNAL FROM ECM (See page DI–22) → BAD → Check wiring between ECM and igniters, and then try another ECM.

TRY ANOTHER IGNITER

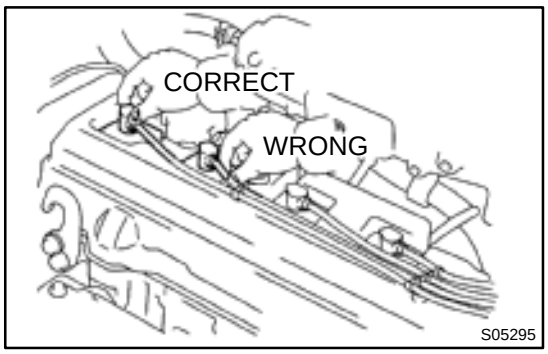

2. INSPECT HIGH–TENSION CORDS

(a) Remove the high–tension cords.
Disconnect the high–tension cords at the rubber boot. Do not pull on the high–tension cords.

NOTICE:
Pulling on or bending the cords may damage the conductor inside.

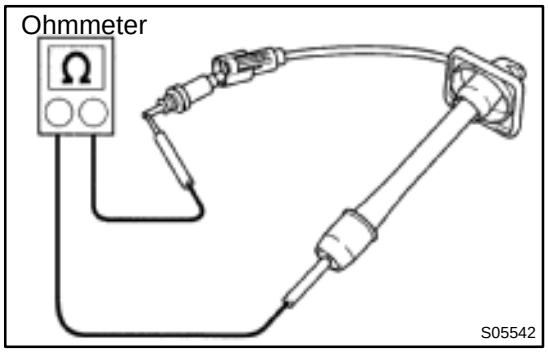

(b) Using an ohmmeter, measure the high–tension cord resistance.
Maximum resistance: 25 kΩ per cord

If the resistance is greater than maximum, check the terminals. If necessary, replace the high–tension cord.

(c) Reinstall the high–tension cords.

3. INSPECT SPARK PLUGS

NOTICE:
- **Never use a wire brush for cleaning.**
- **Never attempt to adjust the electrode gap on a used spark plug.**
- **Spark plugs should be replaced every 100,000 km (60,000 miles).**

(a) Disconnect the high–tension cords from the spark plugs.

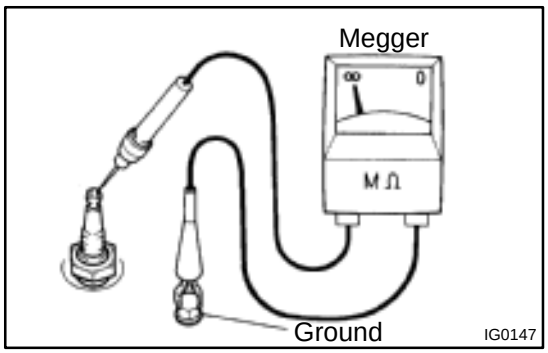

(b) Inspect the electrode.
Using a megger (insulation resistance meter), measure the insulation resistance.
Standard correct insulation resistance:
10 MΩ or more

If the resistance is less than specified, proceed to step (d).

HINT:
If a megger is not available, the following simple method of inspection provides fairly accurate results.

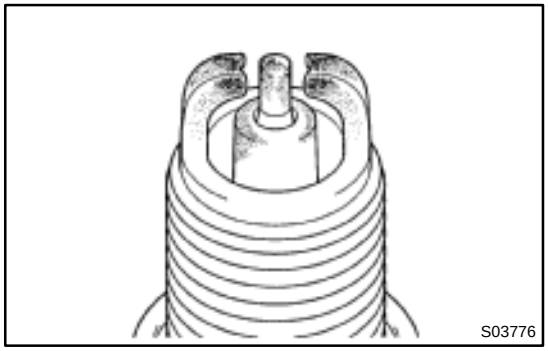

Simple Method:
- Quickly race the engine to 4,000 rpm 5 times.
- Remove the spark plug. (See step (c))
- Visually check the spark plug.
  If the electrode is dry ... OK
  If the electrode is wet ... Proceed to step (d)
- Reinstall the spark plug. (See step (g))

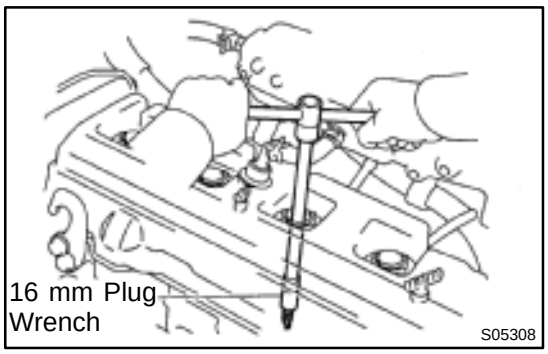

(c) Using a 16 mm plug wrench, remove the 4 spark plugs.
(d) Visually check the spark plug for thread damage and insulator damage.

If abnormal, replace the spark plug.

Recommended spark plug:

DENSO made	PK20TR11
NGK made	BKR6EKPB11

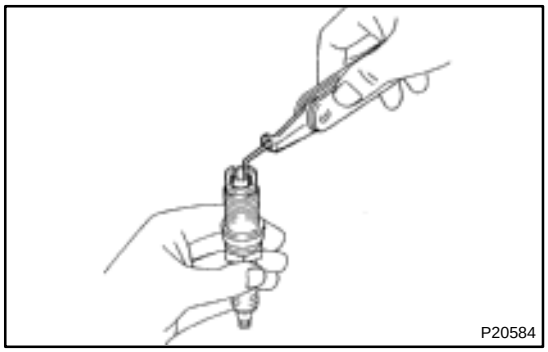

(e) Inspect the electrode gaps.

Maximum electrode gap for used spark plug:
1.3 mm (0.051 in.)

If the gap is greater than maximum, replace the spark plug.

Correct electrode gap for new spark plug:
1.1 mm (0.043 in.)

NOTICE:

If adjusting the gap of a new spark plug, bend only the base of the ground electrode. Do not touch the tip. Never attempt to adjust the gap on the used plug.

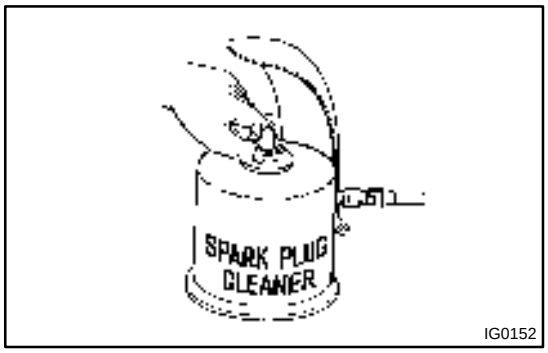

(f) Clean the spark plugs.

If the electrode has traces of wet carbon, allow it to dry and then clean with a spark plug cleaner.

Air pressure: Below 588 kPa (6 kgf/cm^2, 85 psi)
Duration: 20 seconds or less

HINT:

If there are traces of oil, remove it with gasoline before using the spark plug cleaner.

(g) Using a 16 mm plug wrench, install the 4 spark plugs.

Torque: 18 N·m (180 kgf·cm, 13 ft·lbf)

(h) Reconnect the high–tension cords from the spark plugs.

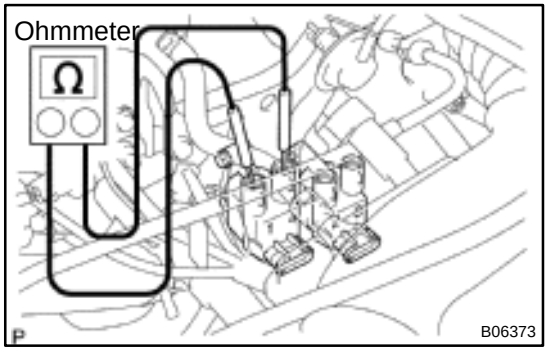

4. INSPECT IGNITION COILS WITH IGNITERS

(a) Disconnect the high–tension cords from the ignition coils.
(b) Inspect the secondary coil resistance.

Using an ohmmeter, measure the resistance between the high–tension terminals.

Secondary coil resistance:

Cold	9.7 – 16.7 kΩ
Hot	12.4 – 19.6 kΩ

If the resistance is not as specified, replace the ignition coil. (See page IG–6)

(c) Reconnect the high–tension cords to the ignition coils.

(d) Inspect the igniters. (See procedure spark test)

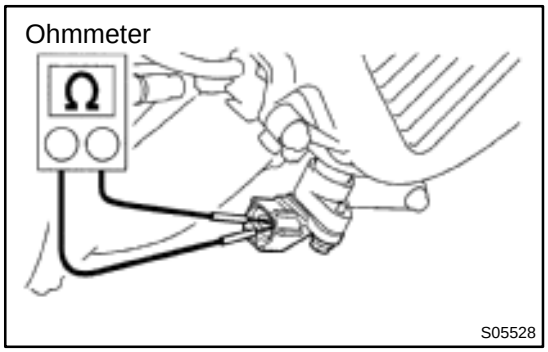

5. INSPECT CAMSHAFT POSITION SENSOR

(a) Disconnect the camshaft position sensor connector.

(b) Using an ohmmeter, measure the resistance between terminals.

Resistance:

Cold	835 – 1,400 Ω
Hot	1,060 – 1,645 Ω

If the resistance is not as specified, replace the sensor. (See page IG–9)

(c) Reconnect the camshaft position sensor connector.

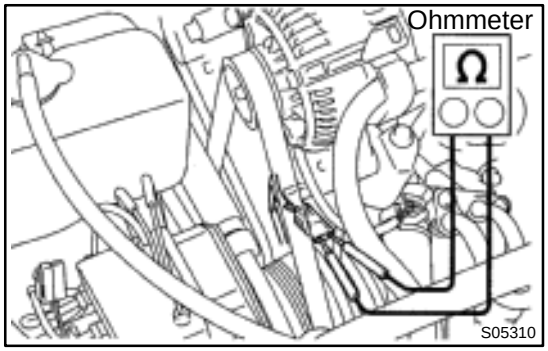

6. INSPECT CRANKSHAFT POSITION SENSOR

(a) Disconnect the crankshaft position sensor connector.

(b) Using an ohmmeter, measure the resistance between terminals.

Resistance:

Cold	985 – 1,600 Ω
Hot	1,265 – 1,890 Ω

If the resistance is not as specified, replace the sensor. (See page IG–12)

(c) Reconnect the crankshaft position sensor connector.

IGNITION COIL

COMPONENTS

IG041–03

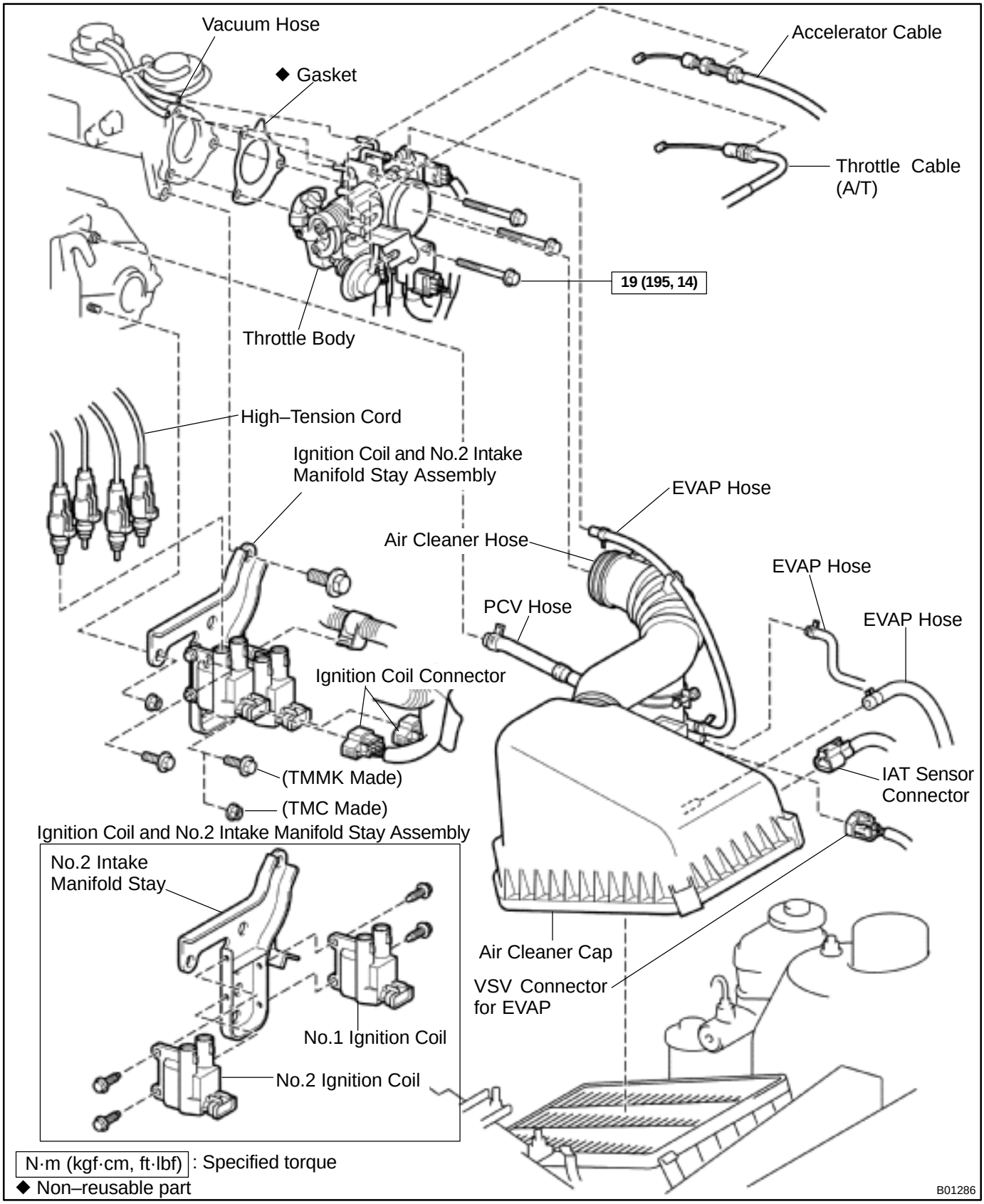

IG0DC–01

REPLACEMENT

1. DISCONNECT THROTTLE BODY FROM INTAKE MANIFOLD (See page SF–32)

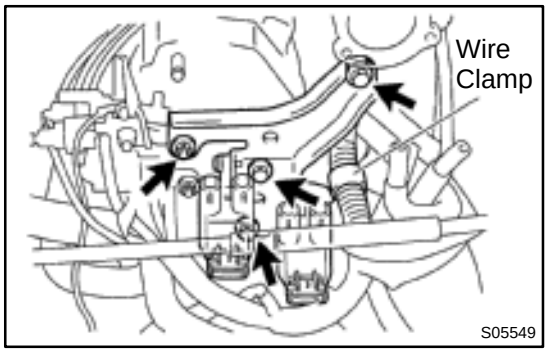

2. REMOVE IGNITION COILS AND NO.2 INTAKE MANIFOLD STAY ASSEMBLY

(a) Disconnect the 2 ignition coil connectors.
(b) Disconnect the wire clamp from the manifold stay.
(c) TMC Made:
Remove the 2 nuts, 2 bolts, 2 ignition coils and manifold stay assembly.
(d) TMMK Made:
Remove the nut, 3 bolts, 2 ignition coils and manifold stay assembly.

3. REMOVE IGNITION COILS FROM NO.2 INTAKE MANIFOLD STAY

Remove the 2 bolts and ignition coil. Remove the 2 ignition coils.

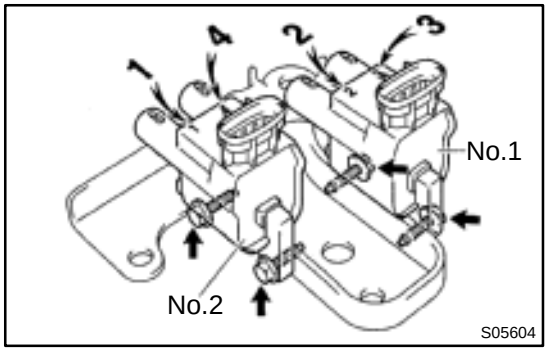

4. REINSTALL IGNITION COILS TO NO.2 INTAKE MANIFOLD STAY

Install the ignition coil with the 2 bolts. Install the 2 ignition coils.
Torque: 9.8 N·m (100 kgf·cm, 87 in.·lbf)

NOTICE:
The installation positions of the ignition coils are different for No.1 and No.2.

5. REINSTALL IGNITION COILS AND NO.2 INTAKE MANIFOLD STAY ASSEMBLY

(a) TMC Made:
Install the 2 ignition coils and manifold stay assembly with the 2 nuts and 2 bolts.
(b) TMMK Made:
Install the 2 ignition coils and manifold stay assembly with the nut and 3 bolts.
Torque:
21 N·m (214 kgf·cm, 15 ft·lbf) for 12 mm head
42 N·m (428 kgf·cm, 31 ft·lbf) for 14 mm head
(c) Install the wire clamp to the manifold stay.
(d) Connect the 2 ignition coil connectors.

6. REINSTALL THROTTLE BODY (See page SF–34)

CAMSHAFT POSITION SENSOR

IG044–03

COMPONENTS

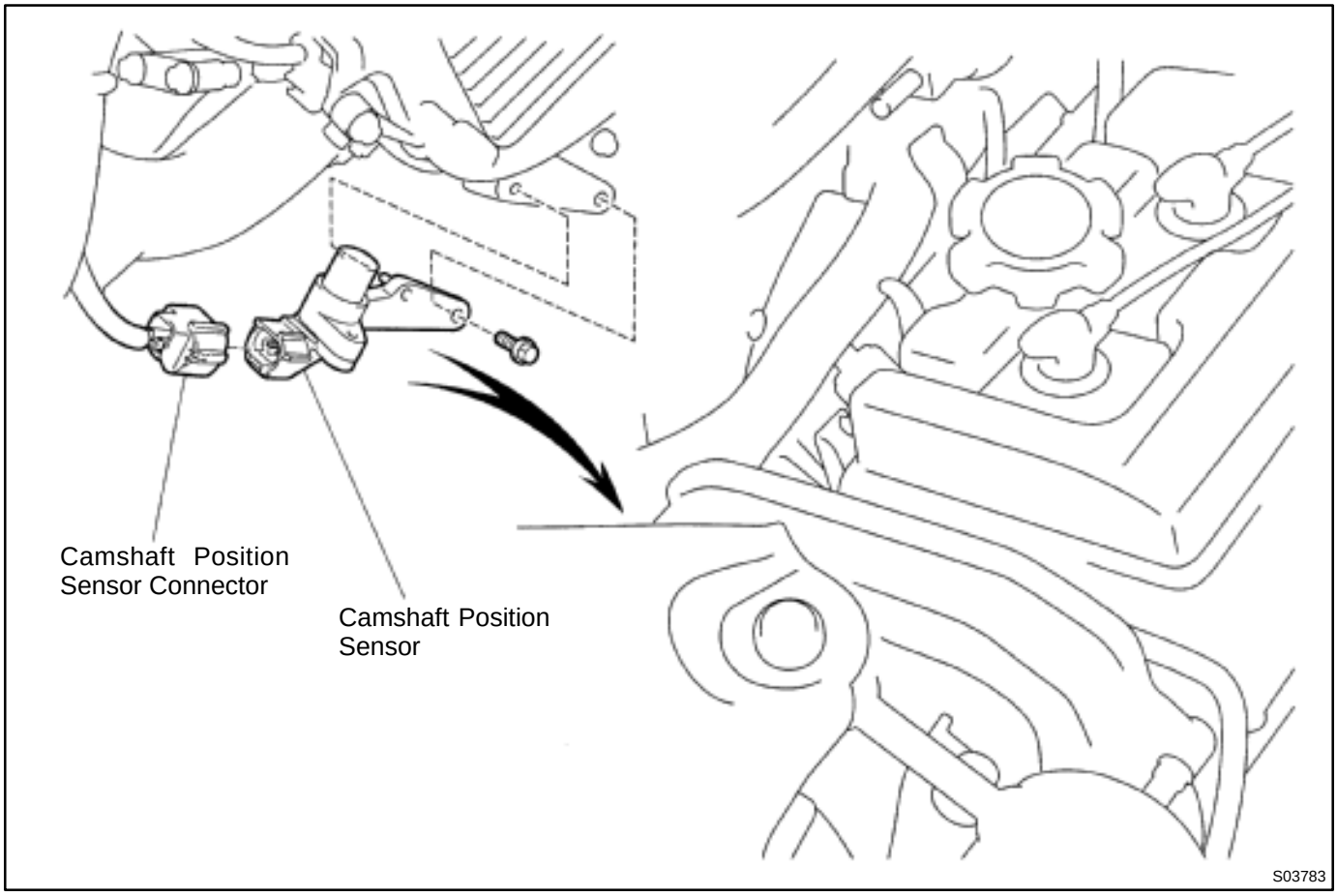

IG0DD–01

REPLACEMENT

1. REMOVE CAMSHAFT POSITION SENSOR

(a) Disconnect the sensor connector.

(b) Remove the bolt and sensor.

2. REINSTALL CAMSHAFT POSITION SENSOR

(a) Install the sensor with the bolt.

Torque: 9.5 N·m (97 kgf·cm, 84 in.·lbf)

(b) Connect the sensor connector.

CRANKSHAFT POSITION SENSOR

IG047–03

COMPONENTS

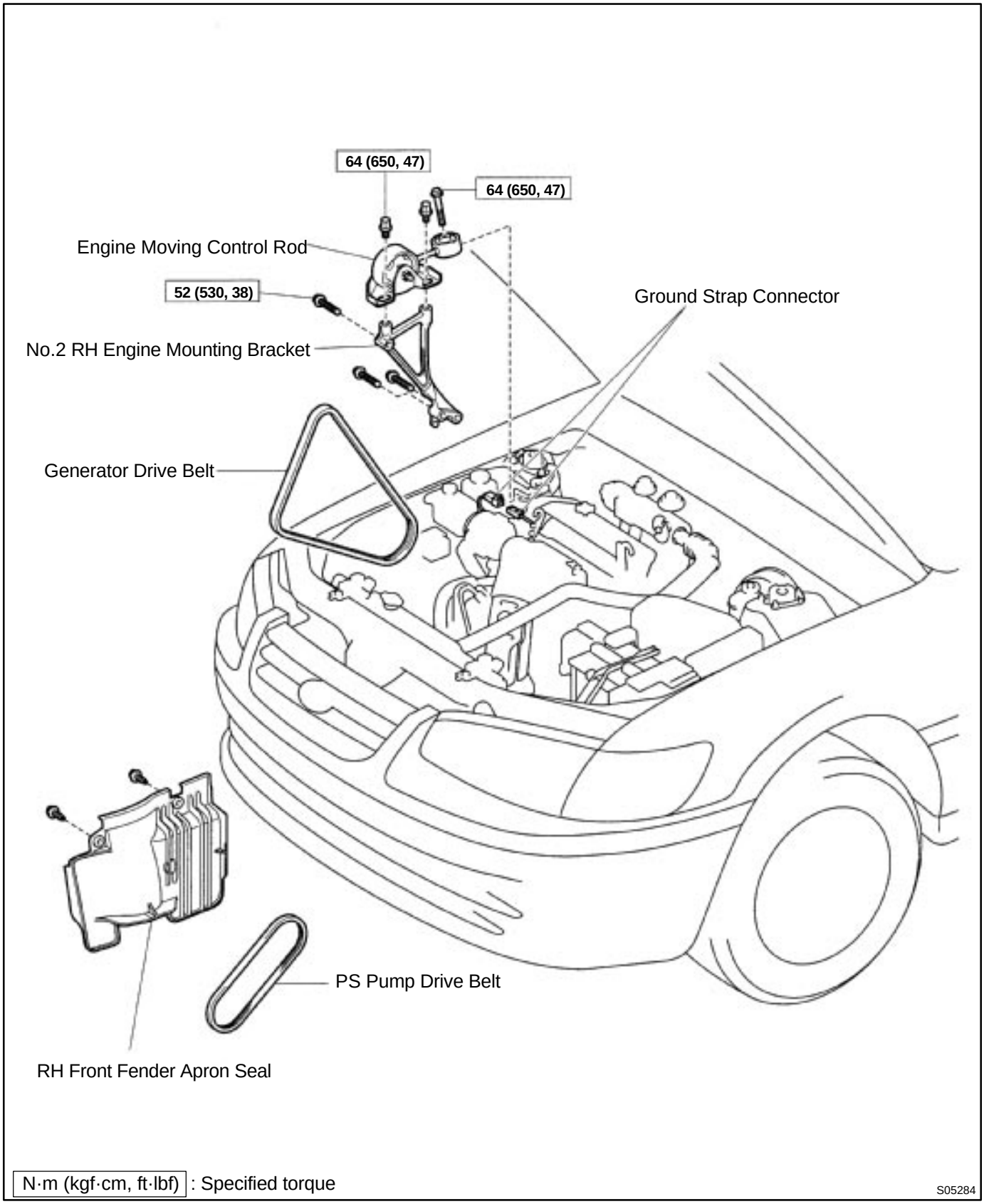

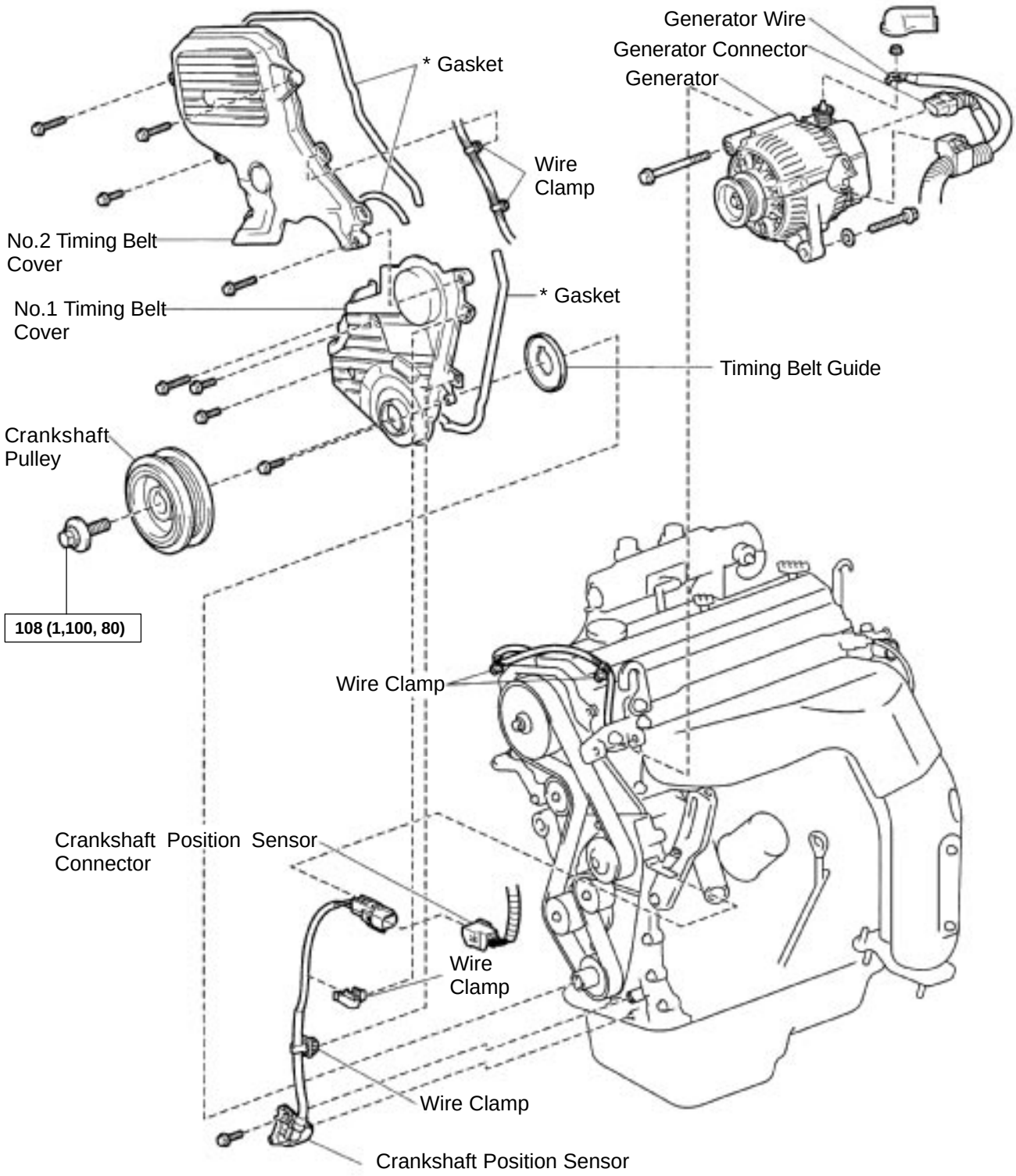

N·m (kgf·cm, ft·lbf) :Specified torque
* Replace only if damaged

S05938

IGNITION SYSTEM

IG0DF–01

ON–VEHICLE INSPECTION

NOTICE:

"Cold" and "Hot" in these sentences express the temperature of the coils themselves. "Cold" is from –10˚C (14˚F) to 50˚C (122˚F) and "Hot" is from 50˚C (122˚F) to 100˚C (212˚F).

1. INSPECT IGNITER AND SPARK TEST

Check that the spark occurs.

(1) Remove the ignition coil.
(2) Remove the spark plug.
(3) Install the spark plug to the ignition coil, and connect the ignition coil connector.
(4) Ground the spark plug.
(5) Check if spark occurs while engine is being cranked.

NOTICE:

To prevent excess fuel being injected from the injectors during this test, do not crank the engine for more 5 – 10 seconds at a time.

If the spark does not occur, do the test as follows:

SPARK TEST

↓ NO

CHECK CONNECTION OF IGNITION COIL AND IGNITER CONNECTORS → BAD → Connect securely.

↓ OK

CHECK RESISTANCE OF HIGH–TENSION CORD
Maximum resistance: 25 kΩ per cord → BAD → Replace the cord(s).

↓ OK

CHECK POWER SUPPLY OF HIGH–TENSION COIL AND IGNITER
1. Turn ignition switch to ON.
2. Check that there is battery voltage at ignition coil positive (+) terminal.

→ BAD → Check wiring between ignition switch to ignition coil and igniter.

↓ OK

CHECK RESISTANCE OF IGNITION COIL

Resistance:	Cold	Hot
AISAN made:		
Primary	0.70 – 0.94 Ω	0.85 – 1.10 Ω
Secondary	10.8 – 14.9 kΩ	13.1 – 17.5 kΩ
Diamond made:		
Primary	0.70 – 0.94 Ω	0.85 – 1.10 Ω
Secondary	6.8 – 11.7 kΩ	8.6 – 13.7 kΩ

→ BAD → Replace the ignition coil (s).

↓ OK

Continue to the next page

Continued from the previous page

OK

CHECK RESISTANCE OF CAMSHAFT POSITION SENSOR

Resistance:	Cold	Hot
DENSO made:	835 – 1,400 Ω	1,060 – 1,645 Ω
Wabash made:	1,690 – 2,560 Ω	2,145 – 3,010 Ω

BAD → Replace the camshaft position sensor.

OK

CHECK RESISTANCE OF CRANKSHAFT POSITION SENSOR

Resistance:	Cold	Hot
	1,630 – 2,740 Ω	2,065 – 3,225 Ω

BAD → Replace the crankshaft position sensor.

OK

CHECK IGT SIGNAL FROM ECM

BAD → Check wiring between ECM and igniter, and then try another ECM.

OK

TRY ANOTHER IGNITER

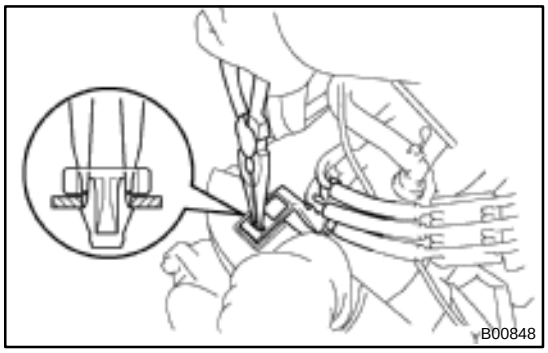

2. INSPECT HIGH–TENSION CORDS

(a) Remove the V–bank cover.

(b) Disconnect the high–tension cords from the spark plugs.

(1) Using needle–nose pliers, disconnect the cord clamp from the engine wire protector.

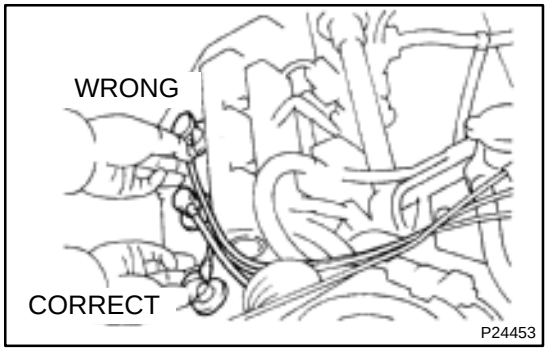

(2) Disconnect the high–tension cords from the spark plugs.

NOTICE:

Pulling on or bending the cords may damage the conductor inside.

(3) Disconnect the high–tension cords from the clamp.

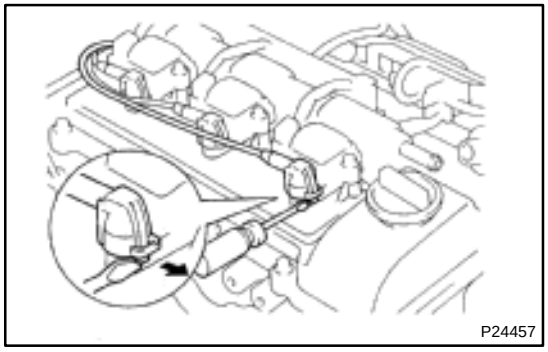

(c) Disconnect the high–tension cords from the ignition coils.

(1) Using a screwdriver, lift up the lock claw and disconnect the holder from the ignition coils.

(2) Disconnect the high–tension cord at the grommet.

NOTICE:

- **Pulling on or bending the cords may damage the conductor inside.**
- **Do not wipe any of the oil from the grommet after the high–tension cord is disconnected.**

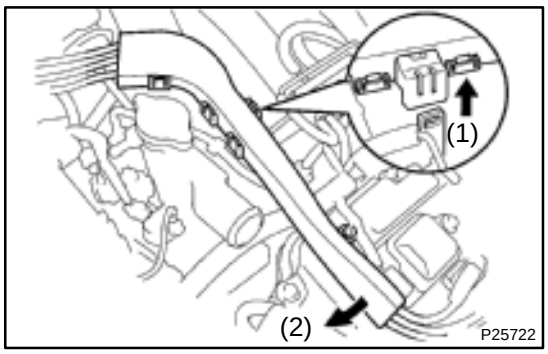

(d) Remove the high–tension cords set.
(1) Disconnect the clamp from the emission control valve set.
(2) Remove the high–tension cords set in indicated direction.

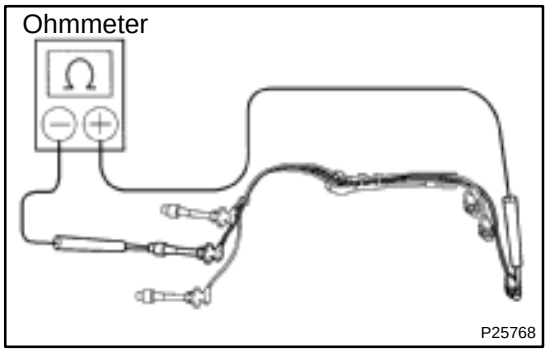

(e) Using an ohmmeter, measure the resistance.
Maximum resistance: 25 kΩ per cord

If the resistance is greater than maximum, check the terminals. If necessary, replace the high–tension cord.

(f) Install the high–tension cords set.

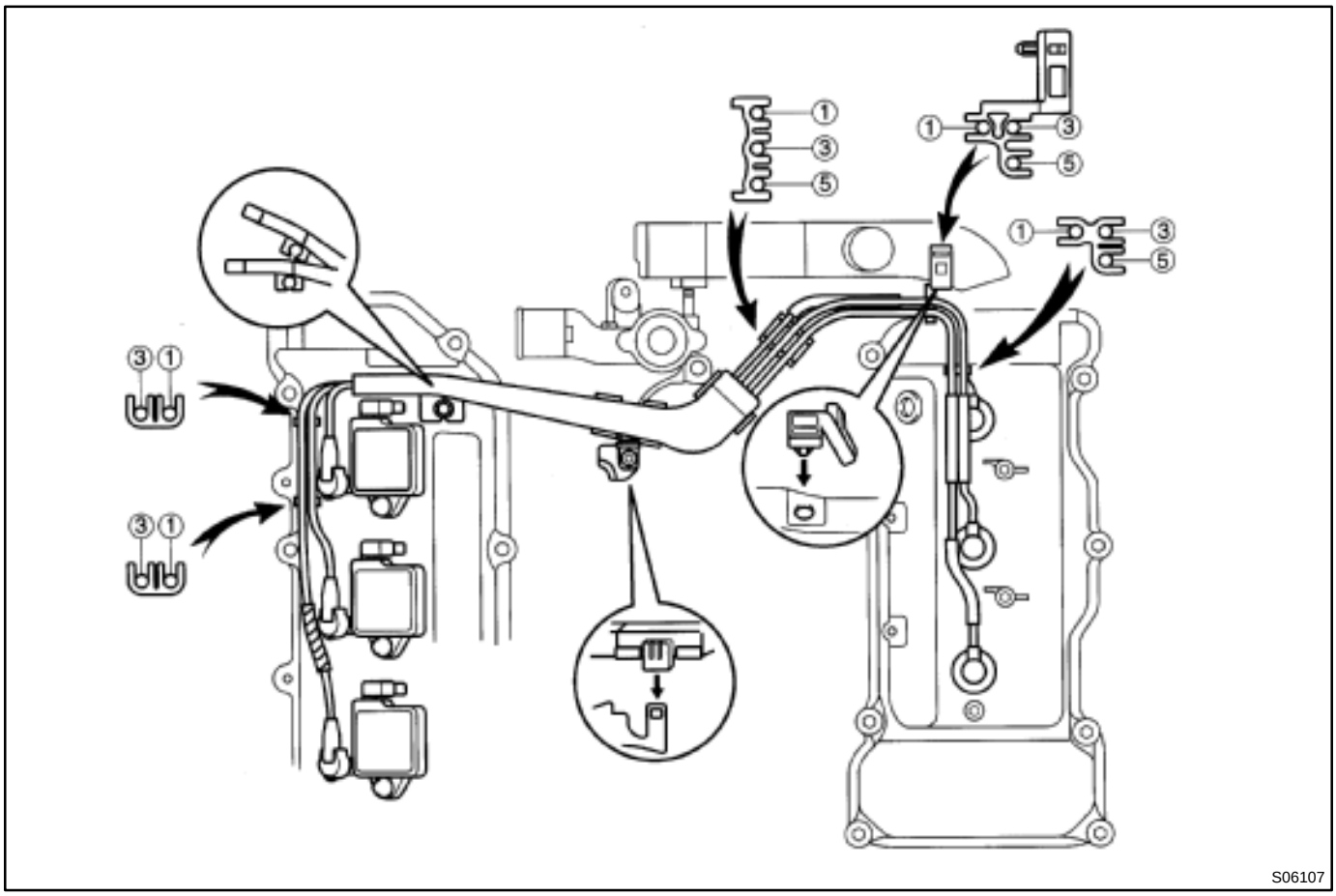

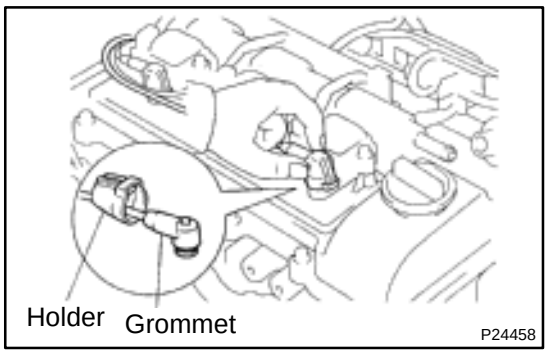

(g) Connect the high–tension cords to the ignition coils.
(1) Assemble the holder and grommet.
(2) Align the spline of the ignition coil with the spline of the holder, and push in the cord.

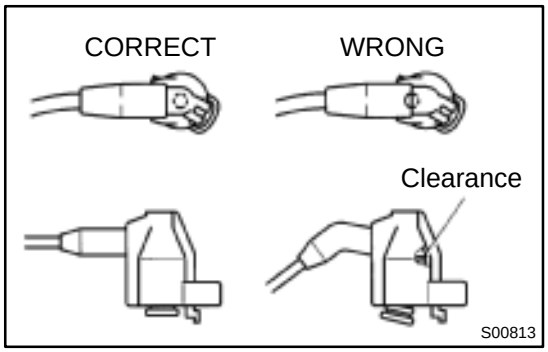

NOTICE:
Check that the holder is correctly installed to the grommet and ignition coil as shown in the illustration.

(3) Check that the lock claw of the holder is engaged by lightly pulling the holder.

(h) Connect the high–tension cords to the spark plugs.
(i) Install the V–bank cover.

3. INSPECT SPARK PLUGS

NOTICE:

- **Never use a wire brush for cleaning.**
- **Never attempt to adjust the electrode gap on a used spark plug.**
- **Spark plugs should be replaced every 100,000 km (60,000 miles).**

(a) Remove the high–tension cords set. (See step 2)
(b) Remove the ignition coils.

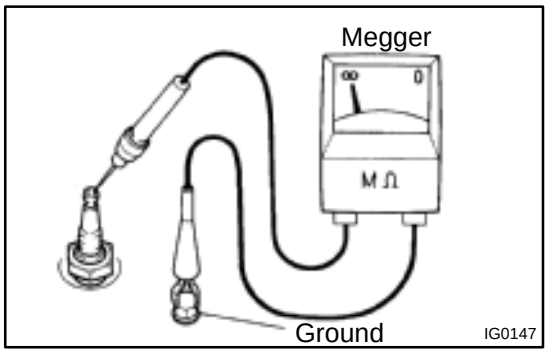

(c) Inspect the electrode.
Using a megger (insulation resistance meter), measure the insulation resistance.
Standard correct insulation resistance:
10 MΩ or more

If the resistance is less than specified, proceed to step (e).
HINT:
If a megger is not available, the following simple method of inspection provides fairly accurate results.

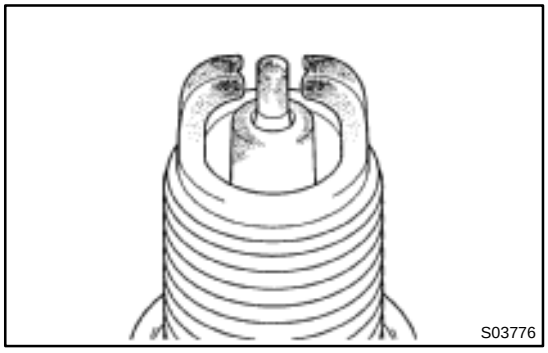

(d) Simple Method:
(1) Quickly race the engine to 4,000 rpm 5 times.
(2) Remove the spark plug. (See step (e))
(3) Visually check the spark plug.

If the electrode is dry ... OK
If the electrode is wet ... Proceed to step (f)

(4) Install the spark plug. (See step (i))

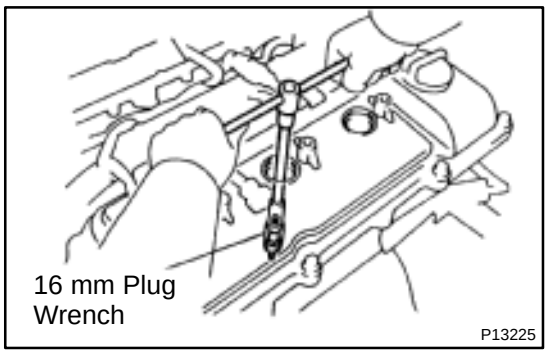

(e) Using a 16 mm plug wrench, remove the 6 spark plugs from the RH and LH cylinder heads.

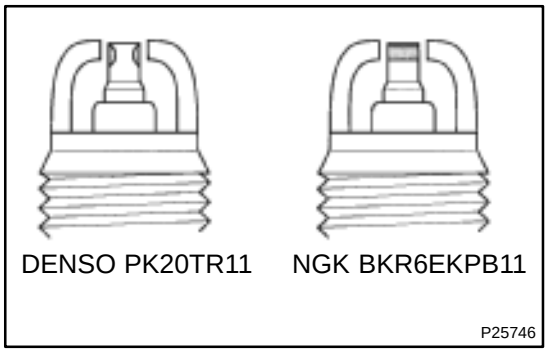

(f) Check the spark plug for thread damage and insulator damage.

If abnormal, replace the spark plug.

Recommended spark plug:

DENSO made	PK20TR11
NGK made	BKR6EKPB11

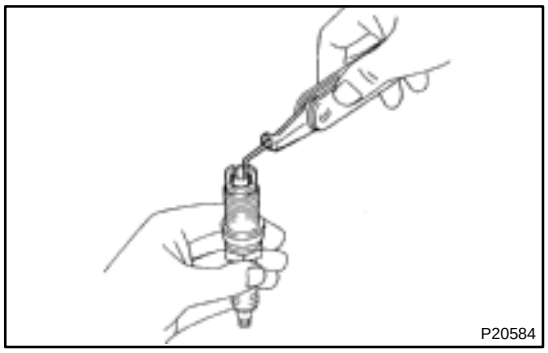

(g) Inspect the electrode gaps.

Maximum electrode gap for used spark plug:
1.3 mm (0.051 in.)

If the gap is greater than maximum, replace the spark plug.

Correct electrode gap for new spark plug:
1.1 mm (0.043 in.)

NOTICE:

If adjusting the gap of a new spark plug, bend only the base of the ground electrode. Do not touch the tip. Never attempt to adjust the gap on the used plug.

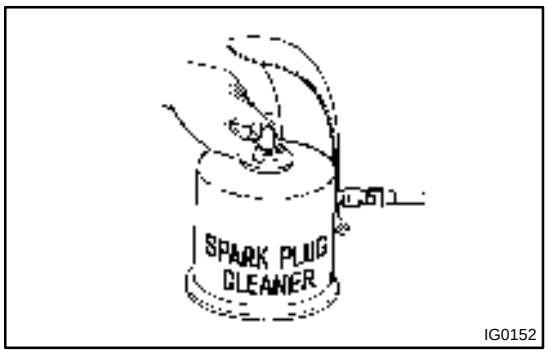

(h) Clean the spark plugs.

If the electrode has traces of wet carbon, allow it to dry and then clean with a spark plug cleaner.

Air pressure: Below 588 kPa (6 kgf/cm^2, 85 psi)
Duration: 20 seconds or less

HINT:

If there are traces of oil, remove it with gasoline before using the spark plug cleaner.

(i) Using a 16 mm plug wrench, install the 6 spark plugs to the RH and LH cylinder heads.

Torque: 18 N·m (180 kgf·cm, 13 ft·lbf)

(j) Install the ignition coils.

(k) Install the high–tension cords set. (See step 2)

4. INSPECT IGNITION COILS

(a) Disconnect the high–tension cords from the ignition coils.

(b) Disconnect the ignition coil connectors.

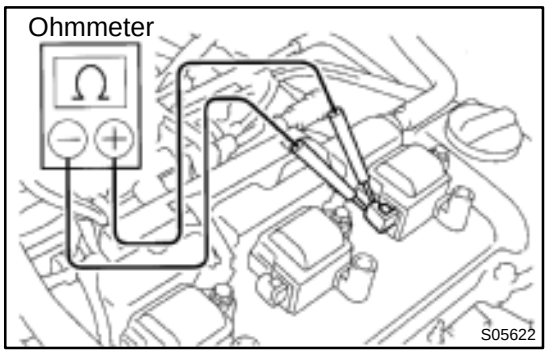

(c) Using an ohmmeter, measure the primary coil resistance between the positive (+) and negative (–) terminals.

Primary coil resistance:

Cold	0.70 – 0.94 Ω
Hot	0.85 – 1.10 Ω

If the resistance is not as specified, replace the ignition coil.

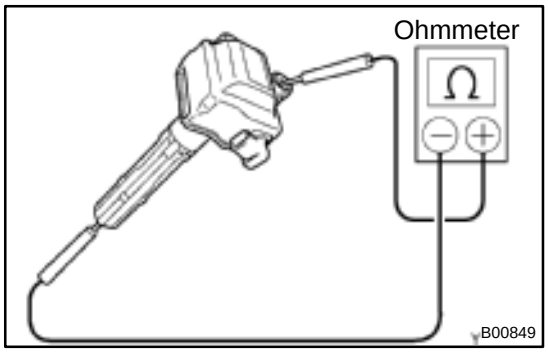

(d) Using an ohmmeter, measure the secondary coil resistance between the positive (+) and high–tension terminal.

Secondary coil resistance:

AISAN made	Cold	10.8 – 14.9 kΩ
AISAN made	Hot	13.1 – 17.5 kΩ
Diamond made	Cold	6.8 – 11.7 kΩ
Diamond made	Hot	8.6 – 13.7 kΩ

If the resistance is not as specified, replace the ignition coil.

(e) Connect the ignition coil connectors.

(f) Connect the high–tension cords to the ignition coils.

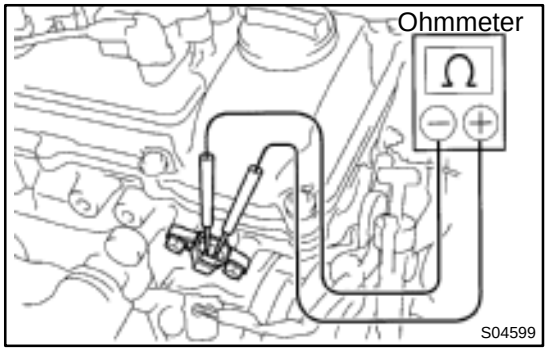

5. INSPECT CAMSHAFT POSITION SENSOR

(a) Disconnect the camshaft position sensor connector.

(b) Using an ohmmeter, measure the resistance between terminals.

Resistance:

DENSO made	Cold	835 – 1,400 Ω
DENSO made	Hot	1,060 – 1,645 Ω
Wabash made	Cold	1,690 – 2,560 Ω
Wabash made	Hot	2,145 – 3,010 Ω

If the resistance is not as specified, replace the camshaft position sensor.

(c) Connect the camshaft position sensor connector.

IGNITION COIL

IG02I–03

REMOVAL

1. DISCONNECT HIGH–TENSION CORDS FROM IGNITION COILS (See page IG–1)

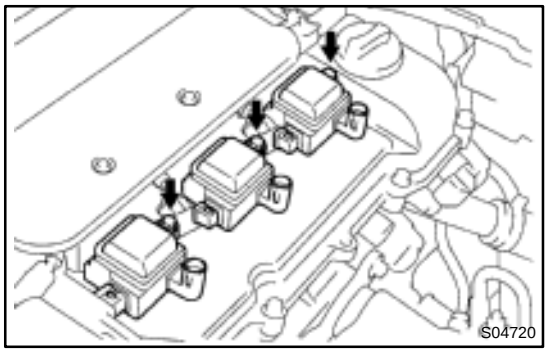

2. REMOVE IGNITION COILS

(a) Disconnect the 3 connectors from the ignition coil.

(b) Remove the 3 bolts and 3 ignition coils from the LH cylinder head.

Torque: 8 N·m (80 kgf·cm, 69 in.·lbf)

HINT:

Arrange the ignition coils in correct order.

IG02J–01

INSTALLATION

Installation is in the reverse order of removal. (See page IG–7)

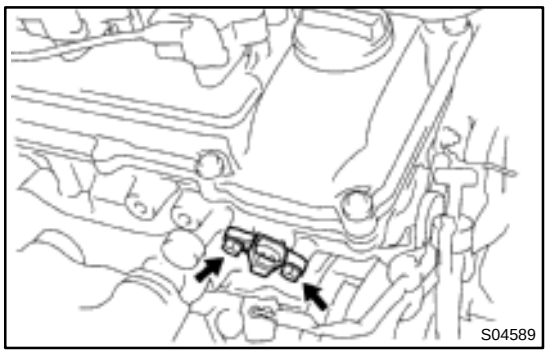

CAMSHAFT POSITION SENSOR

IG02K–03

REMOVAL

REMOVE CAMSHAFT POSITION SENSOR

(a) Disconnect the camshaft position sensor connector.
(b) Remove the 2 bolts and camshaft position sensor.
Torque: 8 N·m (80 kgf·cm, 69 in.·lbf)

IG02L–01

INSTALLATION

Installation is in the reverse order of removal. (See page IG–9)

CRANKSHAFT POSITION SENSOR

IG02M–03

REMOVAL

1. REMOVE RH FENDER APRON SEAL

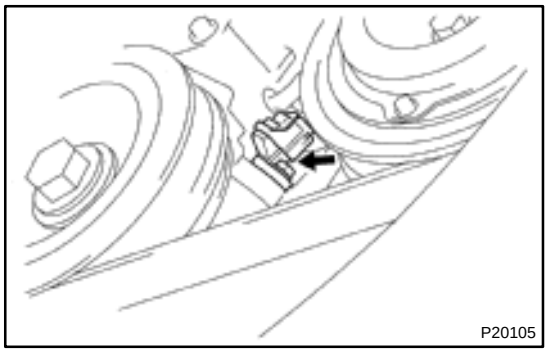

2. REMOVE CRANKSHAFT POSITION SENSOR

(a) Remove the bolt and disconnect the crankshaft position sensor.

Torque: 8 N·m (80 kgf·cm, 69 in.·lbf)

(b) Disconnect the crankshaft position sensor connecter.

IG02N–03

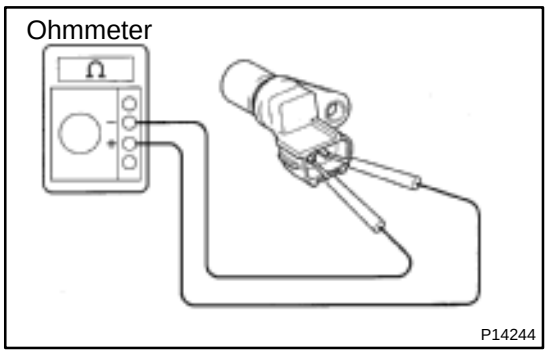

INSPECTION

NOTICE:

"Cold" and "Hot" in these sentences express the temperature of the sensor itself. "Cold" is from –10˚C (14˚F) to 50˚C (122˚F) and "Hot" is from 50˚C (122˚F) to 100˚C (212˚F).

INSPECT CRANKSHAFT POSITION SENSOR RESISTANCE

Using an ohmmeter, measure the resistance between terminals.

Resistance:

Cold	1,630 – 2,740 Ω
Hot	2,065 – 3,225 Ω

If the resistance is not as specified, replace the crankshaft position sensor.

IG02O–01

INSTALLATION

Installation is in the reverse order of removal. (See page IG–11)

HOW TO USE THIS MANUAL

IN00U–22

GENERAL INFORMATION

1. INDEX

An INDEX is provided on the first page of each section to guide you to the item to be repaired. To assist you in finding your way through the manual, the Section Title and major heading are given at the top of every page.

2. GENERAL DESCRIPTION

At the beginning of each section, a General Description is given that pertains to all repair operations contained in that section.
Read these precautions before starting any repair task.

3. TROUBLESHOOTING

TROUBLESHOOTING tables are included for each system to help you diagnose the problem and find the cause. The fundamentals of how to proceed with troubleshooting are described on page IN–21.
Be sure to read this before performing troubleshooting.

4. PREPARATION

Preparation lists the SST (Special Service Tools), recommended tools, equipment, lubricant and SSM (Special Service Materials) which should be prepared before beginning the operation and explains the purpose of each one.

5. REPAIR PROCEDURES

Most repair operations begin with an overview illustration. It identifies the components and shows how the parts fit together.
Example:

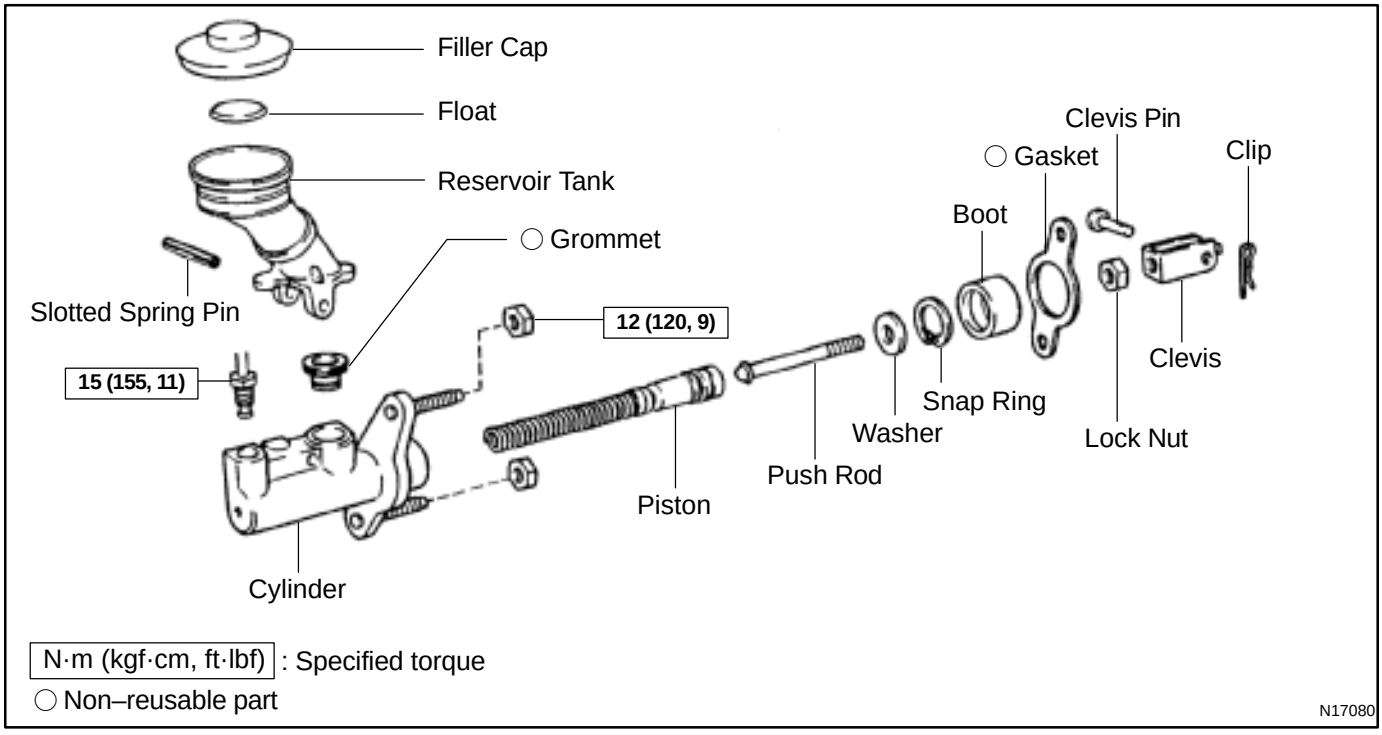

The procedures are presented in a step–by–step format:

- The illustration shows what to do and where to do it.
- The task heading tells what to do.
- The detailed text tells how to perform the task and gives other information such as specifications and warnings.

Example:

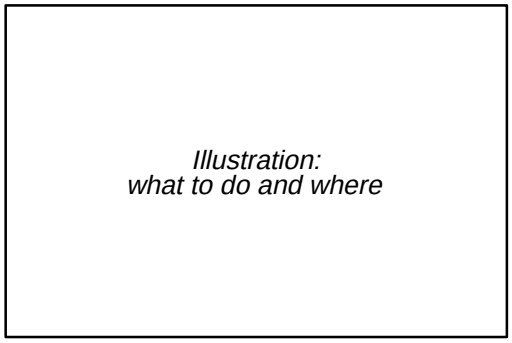

Task heading : what to do

21. CHECK PISTON STROKE OF OVERDRIVE BRAKE

(a) Place SST and a dial indicator onto the overdrive brake piston as shown in the illustration.

SST 09350–30020 (09350–06120)

Set part No. *Component part No.*

Detailed text : how to do task

(b) Measure the stroke applying and releasing the compressed air (392 — 785 kPa, 4 — 8 kgf/cm^2 or 57 — 114 psi) as shown in the illustration.

Piston stroke: 1.40 — 1.70 mm (0.0551 — 0.0669 in.)

Specification

This format provides the experienced technician with a FAST TRACK to the information needed. The upper case task heading can be read at a glance when necessary, and the text below it provides detailed information. Important specifications and warnings always stand out in bold type.

6. REFERENCES

References have been kept to a minimum. However, when they are required you are given the page to refer to.

7. SPECIFICATIONS

Specifications are presented in bold type throughout the text where needed. You never have to leave the procedure to look up your specifications. They are also found in Service Specifications section, for quick reference.

8. CAUTIONS, NOTICES, HINTS:

- CAUTIONS are presented in bold type, and indicate there is a possibility of injury to you or other people.
- NOTICES are also presented in bold type, and indicate the possibility of damage to the components being repaired.
- HINTS are separated from the text but do not appear in bold. They provide additional information to help you perform the repair efficiently.

9. SI UNIT

The UNITS given in this manual are primarily expressed according to the SI UNIT (International System of Unit), and alternately expressed in the metric system and in the English System.

Example:

Torque: 30 N·m (310 kgf·cm, 22 ft·lbf)

IDENTIFICATION INFORMATION

IN0CN–03

VEHICLE IDENTIFICATION AND ENGINE SERIAL NUMBER

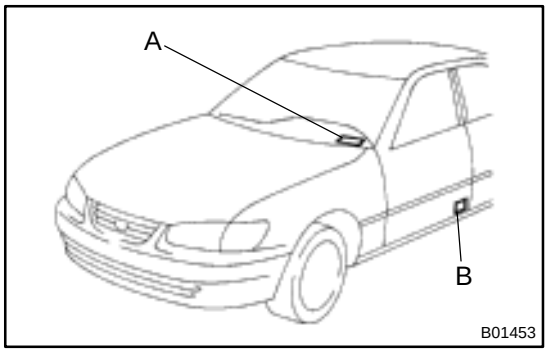

1. VEHICLE IDENTIFICATION NUMBER

The vehicle identification number is stamped on the vehicle identification number plate and the certification label, as shown in the illustration.

A: Vehicle Identification Number Plate
B: Certification Label

5S–FE engine:



1MZ–FE engine:

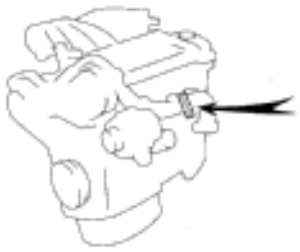

2. ENGINE SERIAL NUMBER

The engine serial number is stamped on the engine block, as shown in the illustration.

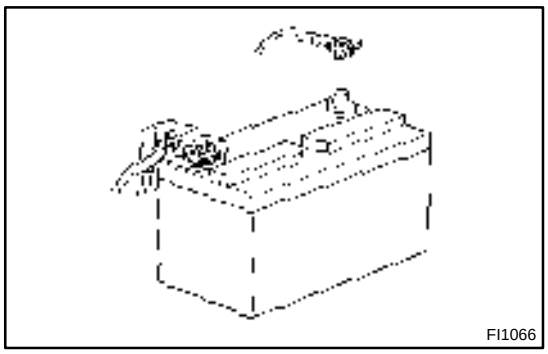
FI1066

REPAIR INSTRUCTIONS

IN0CO–04

GENERAL INFORMATION

BASIC REPAIR HINT

(a) Use fender, seat and floor covers to keep the vehicle clean and prevent damage.

(b) During disassembly, keep parts in the appropriate order to facilitate reassembly.

(c) Installation and removal of battery terminal:
  (1) Before performing electrical work, disconnect the negative (–) terminal cable from the battery.
  (2) If it is necessary to disconnect the battery for inspection or repair, first disconnect the negative (–) terminal cable.
  (3) When disconnecting the terminal cable, to prevent damage to battery terminal, loosen the cable nut and raise the cable straight up without twisting or prying it.
  (4) Clean the battery terminals and cable ends with a clean shop rag. Do not scrape them with a file or other abrasive objects.
  (5) Install the cable ends to the battery terminals after loosening the nut, and tighten the nut after installation. Do not use a hammer to tap the cable ends onto the terminals.
  (6) Be sure the cover for the positive (+) terminal is properly in place.

(d) Check hose and wiring connectors to make sure that they are connected securely and correctly.

(e) Non–reusable parts
  (1) Always replace cotter pins, gaskets, O–rings, oil seals, etc. with new ones.
  (2) Non–reusable parts are indicated in the component illustrations by the ” ” symbol.

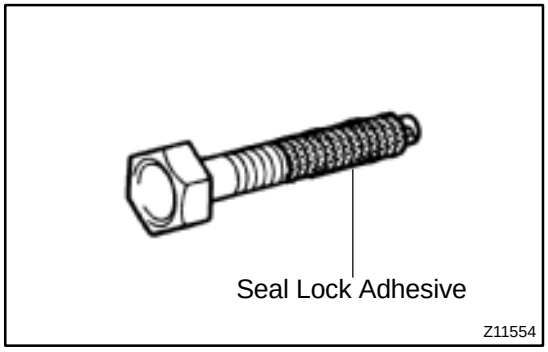

Z11554

(f) Precoated parts
Precoated parts are bolts, nuts, etc. that are coated with a seal lock adhesive at the factory.
  (1) If a precoated part is retightened, loosened or caused to move in any way, it must be recoated with the specified adhesive.
  (2) When reusing precoated parts, clean off the old adhesive and dry with compressed air. Then apply the specified seal lock adhesive to the bolt, nut or threads.

(3) Precoated parts are indicated in the component illustrations by the "● " symbol.

(g) When necessary, use a sealer on gaskets to prevent leaks.

(h) Carefully observe all specifications for bolt tightening torques. Always use a torque wrench.

(i) Use of special service tools (SST) and special service materials (SSM) may be required, depending on the nature of the repair. Be sure to use SST and SSM where specified and follow the proper work procedure. A list of SST and SSM can be found in Preparation section in this manual.

Medium Current Fuse and High Current Fuse Equal Amperage Rating

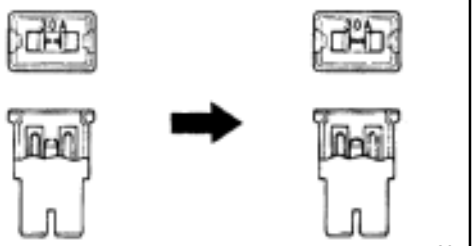

BE1367

(j) When replacing fuses, be sure the new fuse has the correct amperage rating. DO NOT exceed the rating or use one with a lower rating.

Illustration	Symbol	Part Name	Abbreviation
 BE5594	 IN0365	FUSE	FUSE
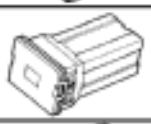 BE5595	 IN0366	MEDIUM CURRENT FUSE	M–FUSE
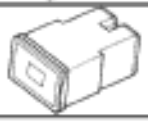 BE5596	 IN0367	HIGH CURRENT FUSE	H–FUSE
 BE5597	 IN0367	FUSIBLE LINK	FL
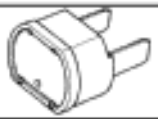 BE5598	 IN0368	CIRCUIT BREAKER	CB

V00076

(k) Care must be taken when jacking up and supporting the vehicle. Be sure to lift and support the vehicle at the proper locations (See page IN–8).
- ○ Cancel the parking brake on the level place and shift the transmission in Neutral (or N position).
- ○ When jacking up the front wheels of the vehicle at first place stoppers behind the rear wheels.
- ○ When jacking up the rear wheels of the vehicle at first place stoppers before the front wheels.
- ○ When either the front or rear wheels only should be jacked up, set rigid racks and place stoppers in front and behind the other wheels on the ground.
- ○ After the vehicle is jacked up, be sure to support it on rigid racks . It is extremely dangerous to do any work on a vehicle raised on a jack alone, even for a small job that can be finished quickly.

(l) Observe the following precautions to avoid damage to the following parts:

(1) Do not open the cover or case of the ECU unless absolutely necessary. (If the IC terminals are touched, the IC may be destroyed by static electricity.)

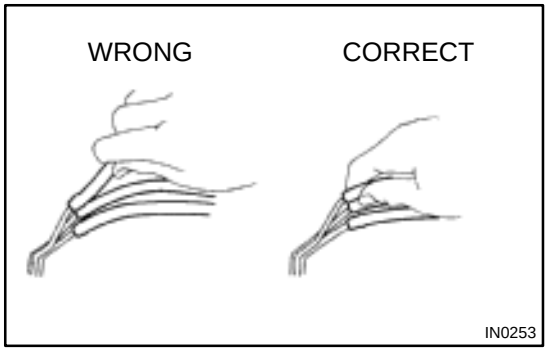

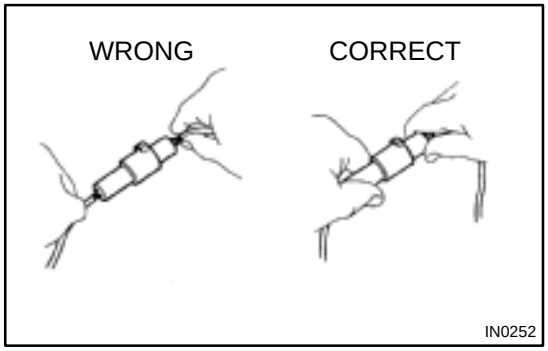

(2) To disconnect vacuum hoses, pull off the end, not the middle of the hose.

(3) To pull apart electrical connectors, pull on the connector itself, not the wires.

(4) Be careful not to drop electrical components, such as sensors or relays. If they are dropped on a hard floor, they should be replaced and not reused.

(5) When steam cleaning an engine, protect the electronic components, air filter and emission–related components from water.

(6) Never use an impact wrench to remove or install temperature switches or temperature sensors.

(7) When checking continuity at the wire connector, insert the tester probe carefully to prevent terminals from bending.

(8) When using a vacuum gauge, never force the hose onto a connector that is too large. Use a step–down adapter for adjustment. Once the hose has been stretched, it may leak air.

Example

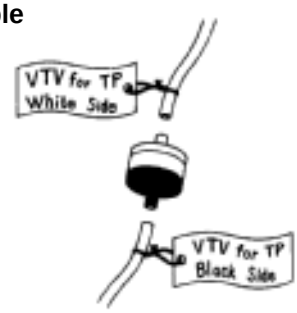

IN0002

(m) Installation and removal of vacuum hose:
  (1) When disconnecting vacuum hoses, use tags to identify how they should be reconnected to.
  (2) After completing a job, double check that the vacuum hoses are properly connected. A label under the hood shows the proper layout.

(n) Unless otherwise stated, all resistance is measured at an ambient temperature of 20˚C (68˚F). Because the resistance may be outside specifications if measured at high temperatures immediately after the vehicle has been running, measurement should be made when the engine has cooled down.

IN0CP–03

VEHICLE LIFT AND SUPPORT LOCATIONS

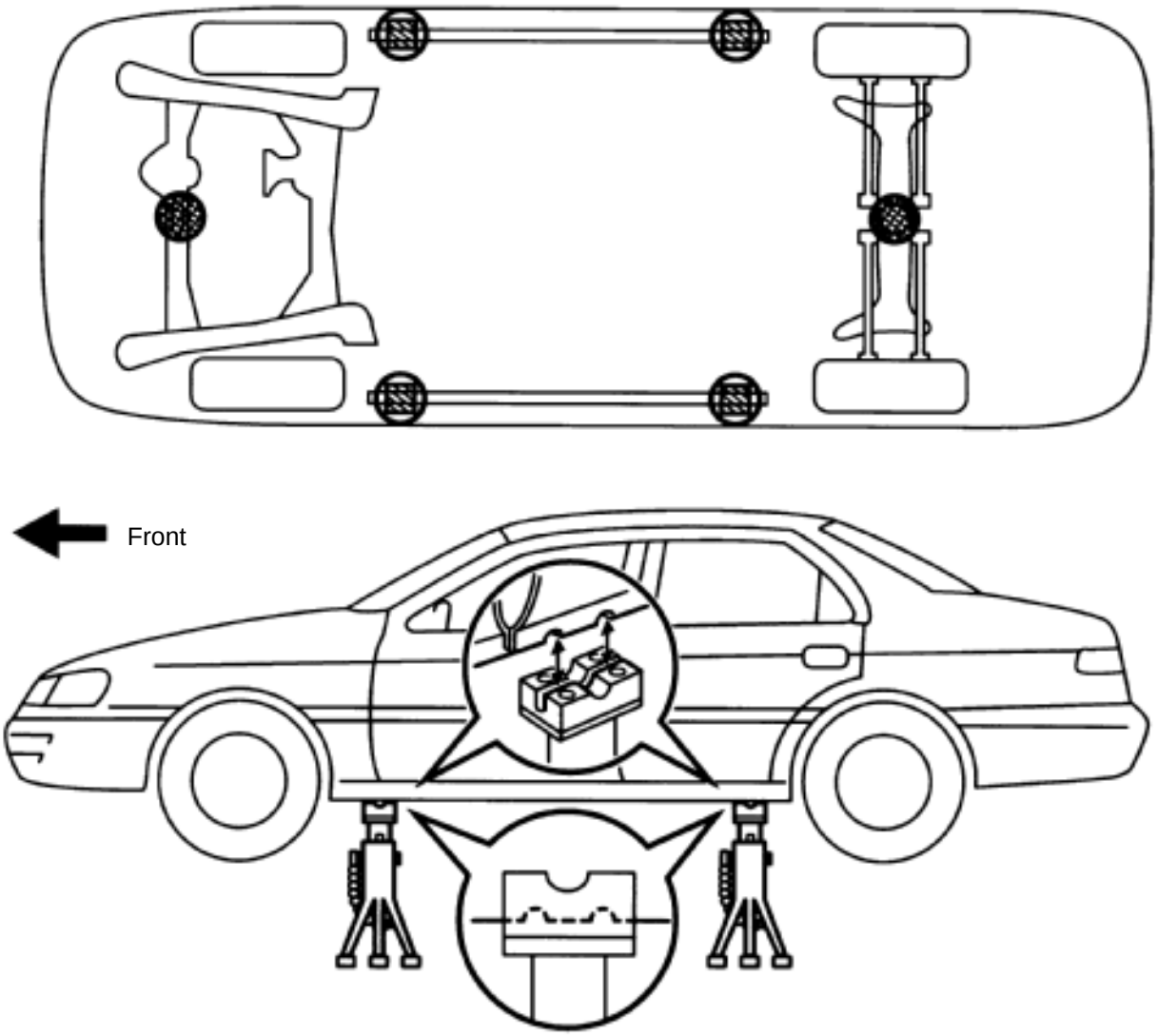

JACK POSITION

Front..... Front crossmember
Rear..... Rear axle beam
CAUTION : When jacking–up the rear and front, make sure the car is not carrying any extra weight.

PANTOGRAPH JACK POSITION

SUPPORT POSITION

Safety stand and swing arm type lift .....

N20619

PLATE TYPE LIFT

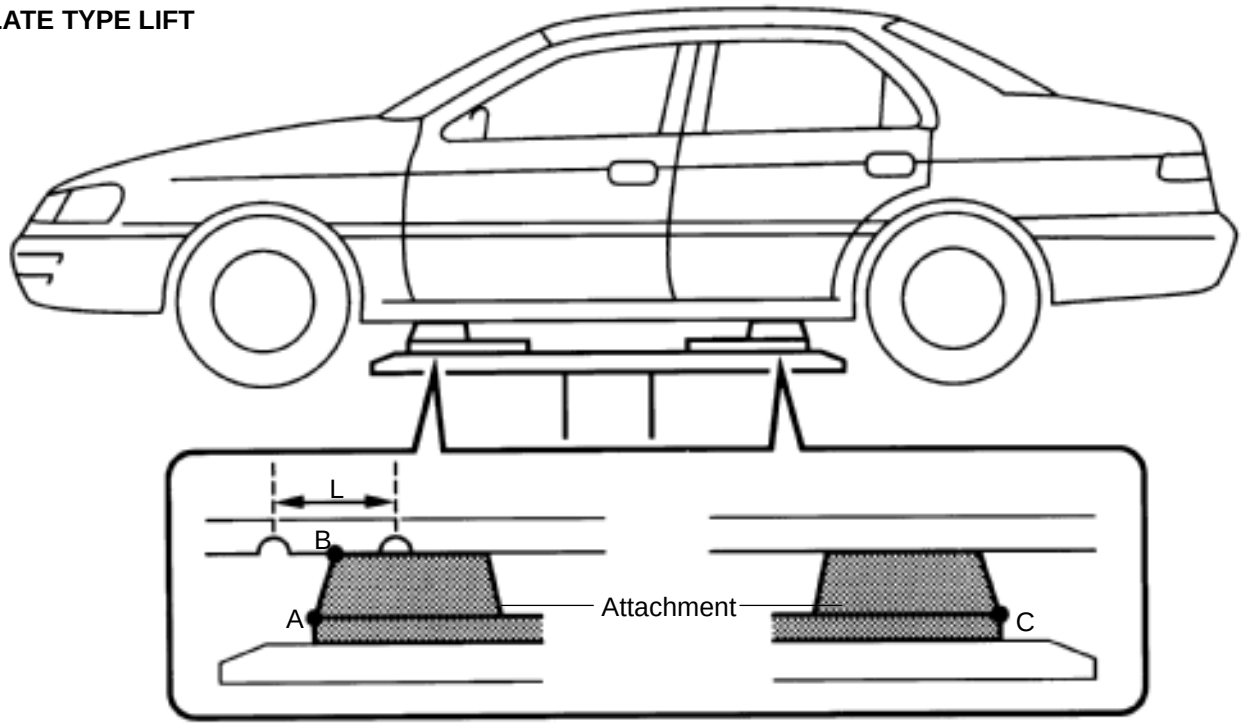

HINT :

Left and right set position	Place the vehicle over the center of the lift.
Front and rear set position	● Align the cushion gum ends of the plate with the attachment lower ends (A, C). ● Align the attachment upper end (B) with the front jack supporting point (L).

Attachment dimensions

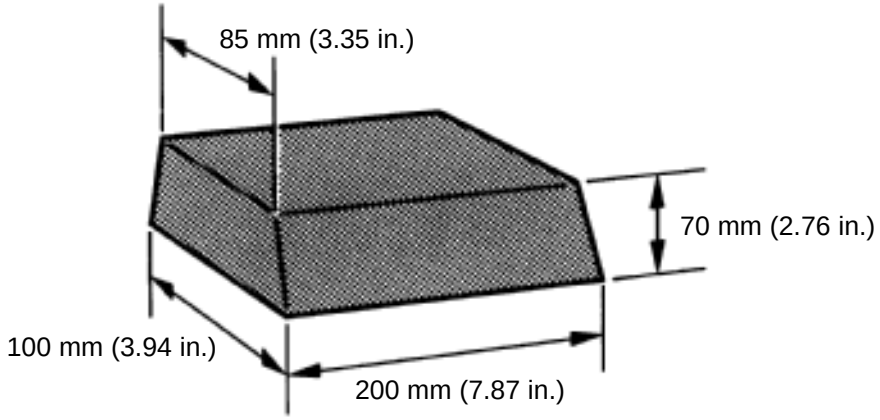

N20620

FOR ALL OF VEHICLES

IN0CQ–03

PRECAUTION

1. FOR VEHICLES EQUIPPED WITH SRS AIRBAG AND SEAT BELT PRETENSIONER

(a) The 1999 CAMRY is equipped with an SRS (Supplemental Restraint System), such as the driver airbag, front passenger airbag assembly, side airbag assembly and seat belt pretensioner.

Failure to carry out service operations in the correct sequence could cause the supplemental restraint system to unexpectedly deploy during servicing, possibly leading to a serious accident.

Further, if a mistake is made in servicing the supplemental restraint system, it is possible the SRS may fail to operate when required. Before servicing (including removal or installation of parts, inspection or replacement), be sure to read the following items carefully, then follow the correct procedure described in this manual.

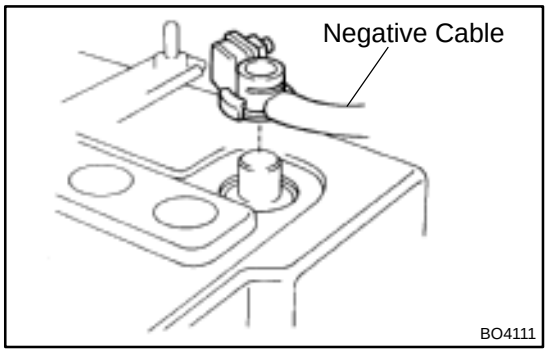

(b) GENERAL NOTICE

(1) Malfunction symptoms of the supplemental restraint system are difficult to confirm, so the diagnostic trouble codes become the most important source of information when troubleshooting. When troubleshooting the supplemental restraint system, always inspect the diagnostic trouble codes before disconnecting the battery (See page DI–626).

(2) Work must be started after 90 seconds from the time the ignition switch is turned to the ”LOCK” position and the negative (–) terminal cable is disconnected from the battery.

(The supplemental restraint system is equipped with a back–up power source so that if work is started within 90 seconds of disconnecting the negative (–) terminal cable from the battery, the SRS may deploy.)

When the negative (–) terminal cable is disconnected from the battery, memory of the clock and audio systems will be cancelled. So before starting work, make a record of the contents memorized by the each memory system. Then when work is finished, reset the clock and audio systems as before.

To avoid erasing the memory of each memory system, never use a back–up power supply from another battery.

(3) Even in cases of a minor collision where the SRS does not deploy, the steering wheel pad, front passenger airbag assembly, side airbag assembly and seat belt pretensioner should be inspected (See page RS–16, RS–29, and BO–127).
(4) Never use SRS parts from another vehicle. When replacing parts, replace them with new parts.
(5) Before repairs, remove the airbag sensor if shocks are likely to be applied to the sensor during repairs.
(6) Never disassemble and repair the airbag sensor assembly, steering wheel pad, front passenger airbag assembly, side airbag assembly or seat belt pretensioner.
(7) If the airbag sensor assembly, steering wheel pad, front passenger airbag assembly, side airbag assembly or seat belt pretensioner has been dropped, or if there are cracks, dents or other defects in the case, bracket or connector, replace them with new ones.
(8) Do not directly expose the airbag sensor assembly, steering wheel pad, front passenger airbag assembly, side airbag assembly or seat belt pretensioner to hot air or flames.
(9) Use a volt/ohmmeter with high impedance (10 kΩ/V minimum) for troubleshooting of the electrical circuit.
(10) Information labels are attached to the periphery of the SRS components. Follow the instructions on the notices.
(11) After work on the supplemental restraint system is completed, check the SRS warning light (See page DI–626).

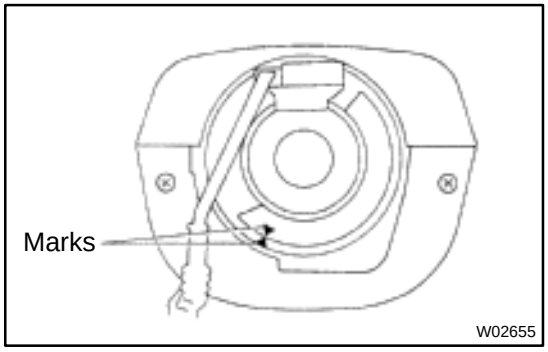

(c) SPIRAL CABLE (in Combination Switch)
The steering wheel must be fitted correctly to the steering column with the spiral cable at the neutral position, otherwise cable disconnection and other troubles may result. Refer to SR–16 of this manual concerning correct steering wheel installation.

(d) STEERING WHEEL PAD (with Airbag)

(1) When removing the steering wheel pad or handling a new steering wheel pad, it should be placed with the pad top surface facing up.
In this case, the twin–lock type connector lock lever should be in the locked state and care should be taken to place it so the connector will not be damaged. In addition do not store a steering wheel pad on top of another one. Storing the pad with its metallic surface up may lead to a serious accident if the airbag inflates for some reason.

(2) Never measure the resistance of the airbag squib. (This may cause the airbag to deploy, which is very dangerous.)

(3) Grease should not be applied to the steering wheel pad and the pad should not be cleaned with detergents of any kind.

(4) Store the steering wheel pad where the ambient temperature remains below 93˚C (200˚F), without high humidity and away from electrical noise.

(5) When using electric welding, first disconnect the airbag connector (yellow color and 2 pins) under the steering column near the combination switch connector before starting work.

(6) When disposing of a vehicle or the steering wheel pad alone, the airbag should be deployed using an SST before disposal (See page RS–18).
Carry out the operation in a safe place away from electrical noise.

Example:

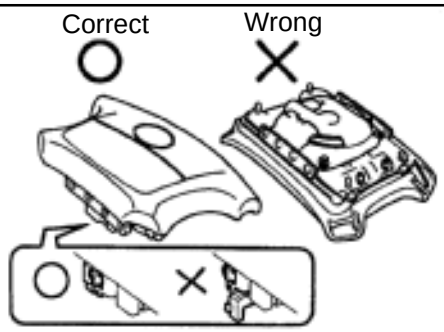

Z13953

Example:

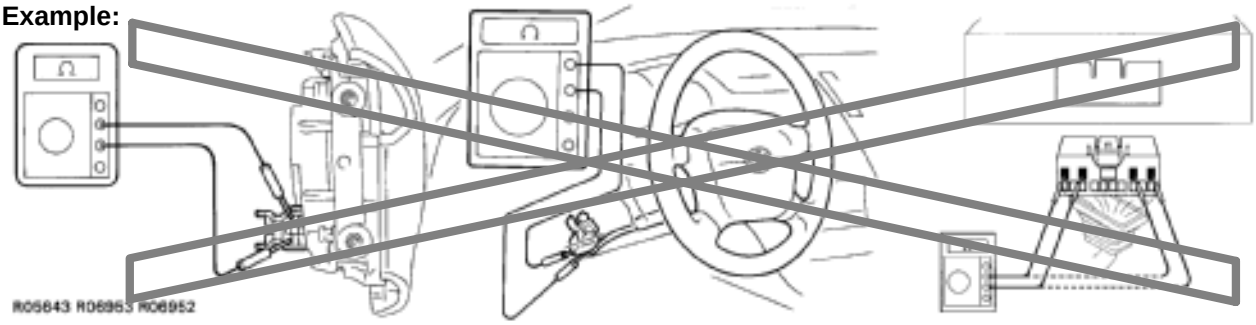

Z13950

(e) FRONT PASSENGER AIRBAG ASSEMBLY

(1) Always store a removed or new front passenger airbag assembly with the airbag deployment direction facing up.
Storing the airbag assembly with the airbag deployment direction facing down could cause a serious accident if the airbag inflates.

(2) Never measure the resistance of the airbag squib. (This may cause the airbag to deploy, which is very dangerous.)

(3) Grease should not be applied to the front passenger airbag assembly and the airbag door should not be cleaned with detergents of any kind.

(4) Store the airbag assembly where the ambient temperature remains below 93˚C (200˚F), without high humidity and away from electrical noise.

(5) When using electric welding, first disconnect the airbag connector (yellow color and 2 pins) installed on the assembly before starting work.

(6) When disposing of a vehicle or the airbag assembly alone, the airbag should be deployed using an SST before disposal (See page RS–31).
Perform the operation in a safe place away from electrical noise.

Example:

Correct ○



Wrong ×



B00696

Example:

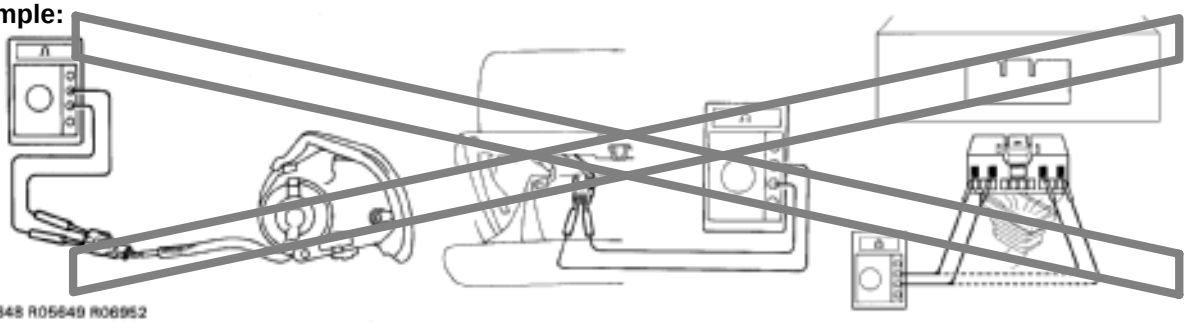

R05648 R05649 R06952

Z13951

(f) SIDE AIRBAG ASSEMBLY

(1) Always store a removed or new side airbag assembly with the airbag deployment direction facing up. Storing the airbag assembly with the airbag deployment direction facing down could cause a serious accident if the airbag deploys.

(2) Never measure the resistance of the airbag squib. (This may cause the airbag to deploy, which is very dangerous.)

(3) Grease should not be applied to the side airbag assembly and the surface should not be cleaned with detergents of any kind.

(4) Store the airbag assembly where the ambient temperature remains below 93˚C (200˚F), without high humidity and away from electrical noise.

(5) When using electric welding, first disconnect the airbag connector (yellow color and 2 pins) under the seat before starting work.

(6) When disposing of a vehicle or the side airbag assembly alone, the airbag should be deployed using an SST before disposal (See page RS–42, RS–55). Perform the operation in a safe place away from electrical noise.

Example:

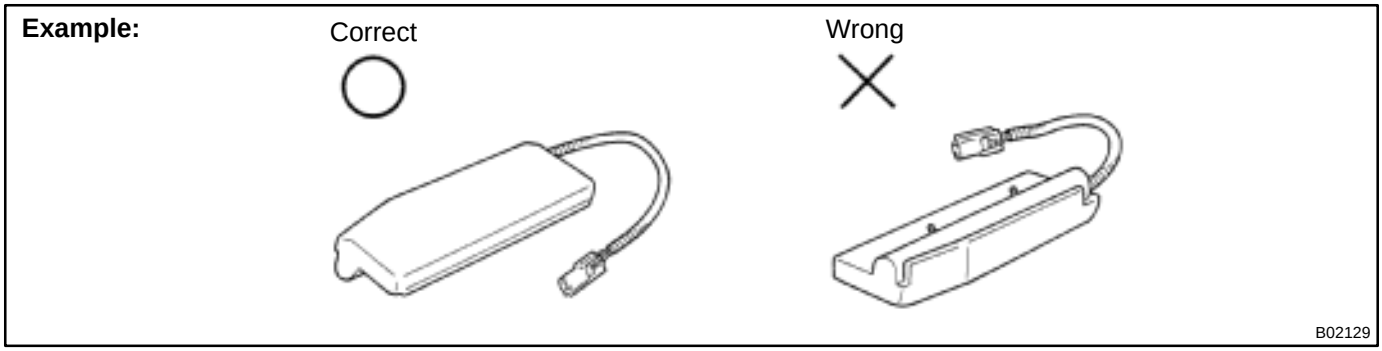

Example:

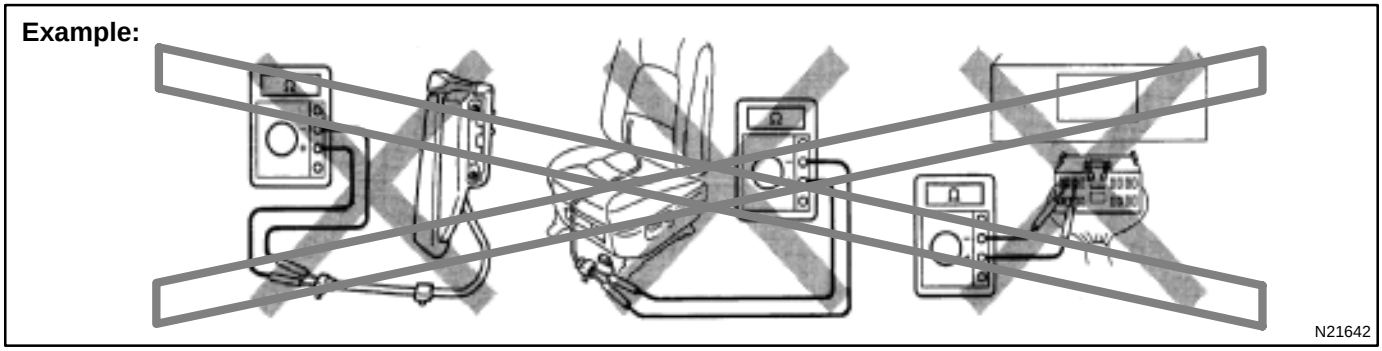

(g) SEAT BELT PRETENSIONER

(1) Never measure the resistance of the seat belt pretensioner. (This may cause the seat belt pretensioner to activate, which is very dangerous.)

(2) Never disassemble the seat belt pretensioner.

(3) Never install the seat belt pretensioner in another vehicle.

(4) Store the seat belt pretensioner where the ambient temperature remains below 80°C (176°F) and away from electrical noise without high humidity.

(5) When using electric welding, first disconnect the connector (yellow color and 2 pins) before starting work.

(6) When disposing of a vehicle or the seat belt pretensioner alone, the seat belt pretensioner should be activated before disposal (See page BO–128). Perform the operation in a safe place away from electrical noise.

(7) The seat belt pretensioner is hot after activation, so let it cool down sufficiently before the disposal. However never apply water to the seat belt pretensioner.

Example:

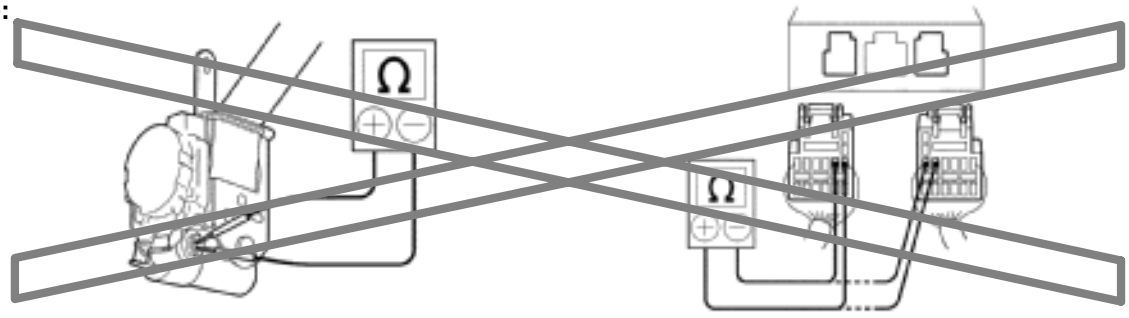

B02121

(h) AIRBAG SENSOR ASSEMBLY

(1) Never reuse the airbag sensor assembly involved in a collision when the SRS has deployed.

(2) The connectors to the airbag sensor assembly should be connected or disconnected with the sensor mounted on the floor. If the connectors are connected or disconnected while the airbag sensor assembly is not mounted to the floor, it could cause undesired ignition of the supplemental restraint system.

(3) Work must be started after 90 seconds from the time the ignition switch is turned to the ”LOCK” position and the negative (–) terminal cable is disconnected from the battery, even if only loosing the set bolts of the airbag sensor assembly.

(i) WIRE HARNESS AND CONNECTOR

The SRS wire harness is integrated with the instrument panel wire harness assembly. All the connectors in the system are a standard yellow color. If the SRS wire harness becomes disconnected or the connector becomes broken due to an accident, etc., repair or replace it as shown on page RS–73.

2. FOR VEHICLES EQUIPPED WITH A CATALYTIC CONVERTER

CAUTION:

If large amount of unburned gasoline flows into the converter, it may overheat and create a fire hazard. To prevent this, observe the following precautions and explain them to your customer.

(a) Use only unleaded gasoline.

(b) Avoid prolonged idling.
Avoid running the engine at idle speed for more than 20 minutes.

(c) Avoid spark jump test.
   (1) Perform spark jump test only when absolutely necessary. Perform this test as rapidly as possible.
   (2) While testing, never race the engine.

(d) Avoid prolonged engine compression measurement.
Engine compression tests must be done as rapidly as possible.

(e) Do not run engine when fuel tank is nearly empty.
This may cause the engine to misfire and create an extra load on the converter.

(f) Avoid coasting with ignition turned off.

(g) Do not dispose of used catalyst along with parts contaminated with gasoline or oil.

3. IF VEHICLE IS EQUIPPED WITH MOBILE COMMUNICATION SYSTEM

For vehicles with mobile communication systems such as two–way radios and cellular telephones, observe the following precautions.

(1) Install the antenna as far as possible away from the ECU and sensors of the vehicle's electronic system.

(2) Install the antenna feeder at least 20 cm (7.87 in.) away from the ECU and sensors of the vehicle's electronic systems. For details about ECU and sensors locations, refer to the section on the applicable component.

(3) Avoid winding the antenna feeder together with other wiring as much as possible, and also avoid running the antenna feeder parallel with other wire harnesses.

(4) Check that the antenna and feeder are correctly adjusted.

(5) Do not install powerful mobile communications system.

4. FOR USING OBD II SCAN TOOL OR TOYOTA HAND–HELD TESTER

CAUTION:

Observe the following items for safety reasons:

- **Before using the OBD II scan tool or TOYOTA hand–held tester, the OBD II scan tool's instruction book or TOYOTA hand–held tester's operator manual should be read thoroughly.**
- **Be sure to route all cables securely when driving with the OBD II scan tool or TOYOTA hand–held tester connected to the vehicle. (i.e. Keep cables away from feet, pedals, steering wheel and shift lever.)**
- **Two persons are required when test driving with the OBD II scan tool or TOYOTA hand–held tester, one person to drive the vehicle and the other person to operate the OBD II scan tool or TOYOTA hand–held tester.**

5. FOR VEHICLES EQUIPPED WITH TRACTION CONTROL (TRAC) SYSTEM

NOTICE:

When using a 2–wheel drum tester such as a speedometer tester or chassis dynamometer, etc., or jacking up the front wheels and driving the wheels, always push in the TRAC cut ("TRAC OFF") switch and turn the TRAC system OFF.

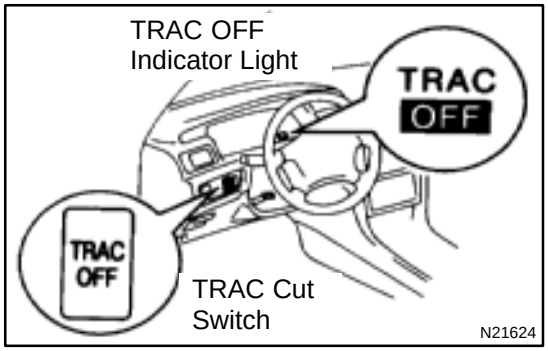

Confirm TRAC system is OFF

(1) Press the TRAC cut ("TRAC OFF") switch.

(2) Check that the TRAC OFF indicator light comes on when the TRAC system is turned OFF by the TRAC cut switch.

HINT:

TRAC cut switch is reset after the ignition switch has been turned OFF and ON.

The TRAC system can be operated.

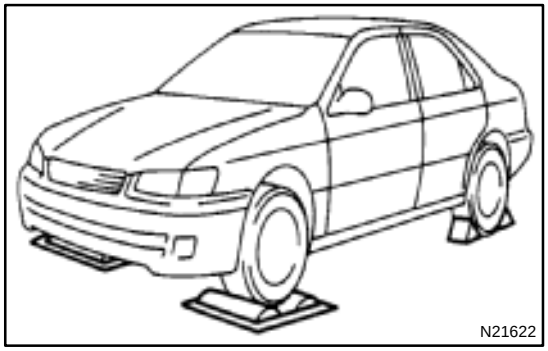

(3) Begin measurements.

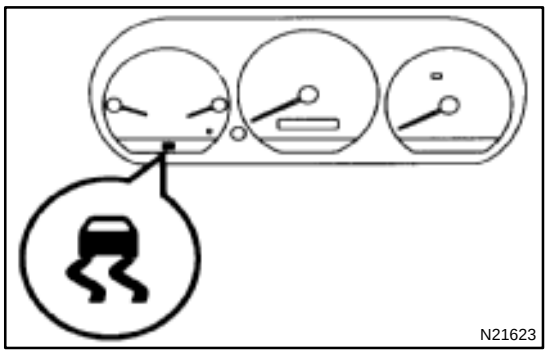

(4) Press the TRAC cut switch to turn the TRAC to the operative mode and check that the TRAC OFF indicator light goes off.

HINT:
The SLIP indicator light blinks when the TRAC system in operation.

HOW TO TROUBLESHOOT ECU CONTROLLED SYSTEMS

IN05Y–07

GENERAL INFORMATION

A large number of ECU controlled systems are used in the 1999 CAMRY. In general, the ECU controlled system is considered to be a very intricate system requiring a high level of technical knowledge and expert skill to troubleshoot. However, the fact is that if you proceed to inspect the circuits one by one, troubleshooting of these systems is not complex. If you have adequate understanding of the system and a basic knowledge of electricity, accurate diagnosis and necessary repair can be performed to locate and fix the problem. This manual is designed through emphasis of the above standpoint to help service technicians perform accurate and effective troubleshooting, and is compiled for the following major ECU controlled systems:
The troubleshooting procedure and how to make use of it are described on the following pages.

1. 5S–FE Engine	DI–1
2. 1MZ–FE Engine	DI–195
3. A140E Automatic Transaxle	DI–387
4. A541E Automatic Transaxle	DI–436
5. Anti–Lock Brake System (DENSO made)	DI–491
6. Anti–Lock Brake System (BOSCH made)	DI–537
7. ABS & Traction Control System	DI–572
8. Supplemental Restraint System	DI–624
9. Wireless Door Lock Control System	DI–800
10.Theft Deterrent System	DI–826
11.Cruise Control System	DI–868
12.Engine Immobiliser System	DI–919

FOR USING OBD II SCAN TOOL OR TOYOTA HAND–HELD TESTER

- Before using the scan tool or tester, the scan tool's instruction book or tester's operator manual should be read thoroughly.
- If the scan tool or tester cannot communicate with ECU controlled systems when you have connected the cable of the scan tool or tester to DLC3, turned the ignition switch ON and operated the scan tool, there is a problem on the vehicle side or tool side.
  (1) If communication is normal when the tool is connected to another vehicle, inspect the diagnosis data link line (Bus⊕line) or ECU power circuit of the vehicle.
  (2) If communication is still not possible when the tool is connected to another vehicle, the problem is probably in the tool itself, so perform the Self Test procedures outline in the Tester Operator's Manual.

IN05W–08

HOW TO PROCEED WITH TROUBLESHOOTING

Carry out troubleshooting in accordance with the procedure on the following page. Here, only the basic procedure is shown. Details are provided in Diagnostics section, showing the most effective methods for each circuit. Confirm the troubleshooting procedures first for the relevant circuit before beginning troubleshooting of that circuit.

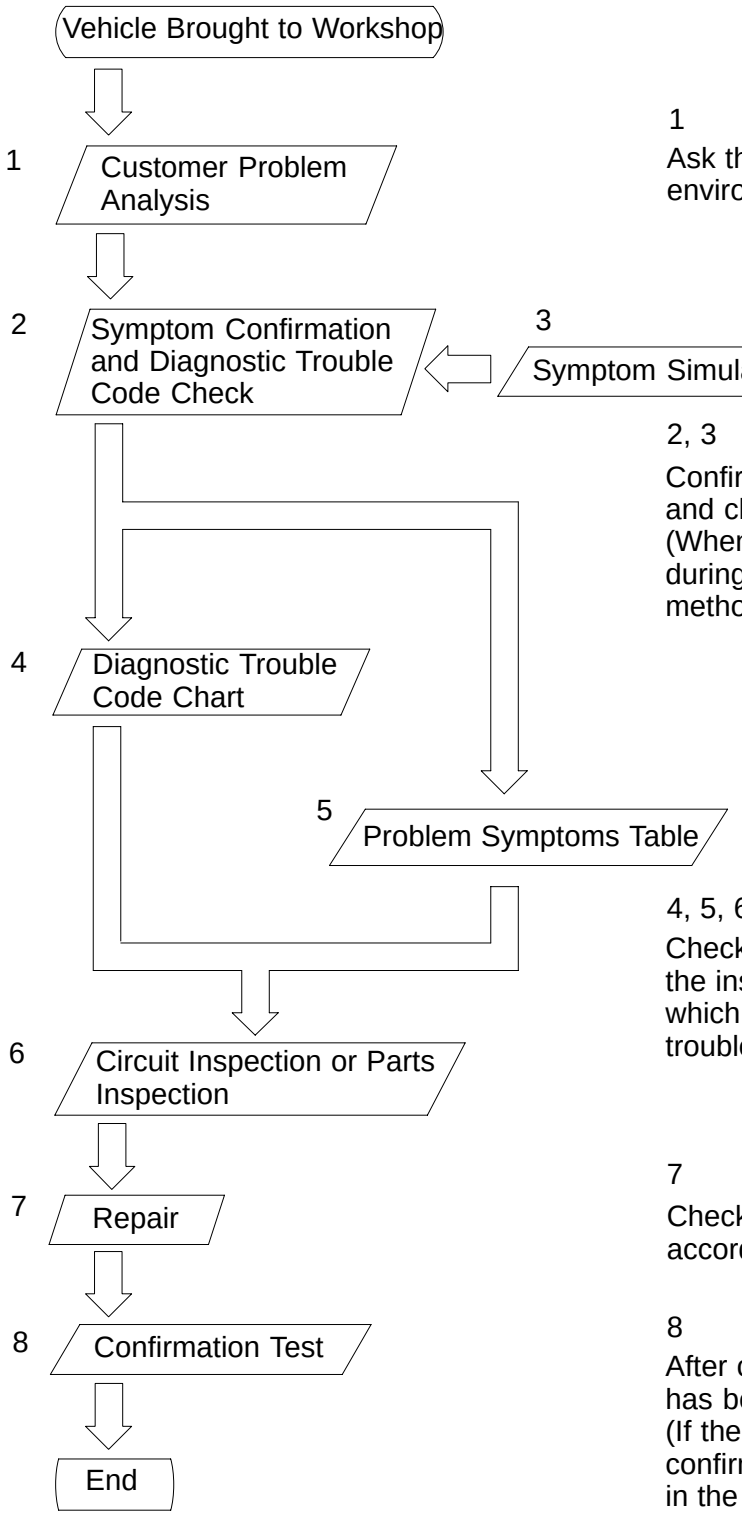

1

Ask the customer about the conditions and the environment when the problem occurred.

2, 3

Confirm the symptoms and the problem conditions, and check the diagnostic trouble codes.
(When the problem symptoms do not appear during confirmation, use the symptom simulation method described later on.)

4, 5, 6

Check the results obtained in Step 2, then confirm the inspection procedure for the system or the part which should be checked using the diagnostic trouble code chart or the problem symptoms table.

7

Check and repair the affected system or part in accordance with the instructions in Step 6.

8

After completing repairs, confirm that the problem has been eliminated.
(If the problem is not reproduced, perform the confirmation test under the same conditions and in the same environment as when it occurred for the first time.)

1. CUSTOMER PROBLEM ANALYSIS

In troubleshooting, the problem symptoms must be confirmed accurately and all preconceptions must be cleared away in order to give an accurate judgment. To ascertain just what the problem symptoms are, it is extremely important to ask the customer about the problem and the conditions at the time it occurred.

Important Point in the Problem Analysis:

The following 5 items are important points in the problem analysis. Past problems which are thought to be unrelated and the repair history, etc. may also help in some cases, so as much information as possible should be gathered and its relationship with the problem symptoms should be correctly ascertained for reference in troubleshooting. A customer problem analysis table is provided in Diagnostics section for each system for your use.

Important Points in the Customer Problem Analysis

- What ——— Vehicle model, system name
- When ——— Date, time, occurrence frequency
- Where ——— Road conditions
- Under what conditions? ——— Running conditions, driving conditions, weather conditions
- How did it happen? ——— Problem symptoms

(Sample) Engine control system check sheet.

CUSTOMER PROBLEM ANALYSIS CHECK

ENGINE CONTROL SYSTEM Check Sheet

Inspector's Name _____

Customer's Name		Model and Model Year	
Driver's Name		Frame No.	
Data Vehicle Brought in		Engine Model	
License No.		Odometer Reading	km miles

Problem Symptoms	☐ Engine does not Start	☐ Engine does not crank ☐ No initial combustion ☐ No complete combustion
	☐ Difficult to Start	☐ Engine cranks slowly ☐ Other _____
	☐ Poor Idling	☐ Incorrect first idle ☐ Idling rpm is abnormal ☐ High (rpm) ☐ Low (rpm) ☐ Rough idling ☐ Other _____
	☐ Poor Drive ability	☐ Hesitation ☐ Back fire ☐ Muffler explosion (after–fire) ☐ Surging ☐ Knocking ☐ Other _____
	☐ Engine Stall	☐ Soon after starting ☐ After accelerator pedal depressed ☐ After accelerator pedal released ☐ During A/C operation ☐ Shifting from N to D ☐ Other _____
	☐ Others	

☐ Constant ☐ Sometimes (times per day/month)

2. SYMPTOM CONFIRMATION AND DIAGNOSTIC TROUBLE CODE CHECK

The diagnostic system in the 1999 CAMRY fulfills various functions. The first function is the Diagnostic Trouble Code Check in which a malfunction in the signal circuits to the ECU is stored in code in the ECU memory at the time of occurrence, to be output by the technician during troubleshooting. Another function is the Input Signal Check which checks if the signals from various switches are sent to the ECU correctly. By using these check functions, the problem areas can be narrowed down quickly and troubleshooting can be performed effectively. Diagnostic functions are incorporated in the following systems in the CAMRY.

System	Diagnostic Trouble Code Check	Input Signal Check (Sensor Check)	Diagnostic Test Mode (Active Test)
Engine (5S–FE)	○ (with Check Mode)	○	○
Engine (1MZ–FE)	○ (with Check Mode)	○	○
Automatic Transaxle (A140E)	○ (with Check Mode)	○	
Automatic Transaxle (A541E)	○ (with Check Mode)	○	
Anti–Lock Brake System (DENSO made)	○	○	
Anti–Lock Brake System (BOSCH made)	○	○	
ABS & Traction Control System	○	○	
Supplemental Restraint System	○		
Wireless Door Lock Control System	○	○	
Theft Deterrent System	○		
Cruise Control System	○		
Engine Immobiliser System	○		

In diagnostic trouble code check, it is very important to determine whether the problem indicated by the diagnostic trouble code is still occurring or occurred in the past but returned to normal at present. In addition, it must be checked in the problem symptom check whether the malfunction indicated by the diagnostic trouble code is directly related to the problem symptom or not. For this reason, the diagnostic trouble codes should be checked before and after the symptom confirmation to determine the current conditions, as shown in the table below. If this is not done, it may, depending on the case, result in unnecessary troubleshooting for normally operating systems, thus making it more difficult to locate the problem, or in repairs not pertinent to the problem. Therefore, always follow the procedure in correct order and perform the diagnostic trouble code check.

DIAGNOSTIC TROUBLE CODE CHECK PROCEDURE

Diagnostic Trouble Code Check (Make a note of and then clear)	**Confirmation of Symptoms**	**Diagnostic Trouble Code Check**	**Problem Condition**
Diagnostic Trouble Code Display	Problem symptoms exist	Same diagnostic trouble code is displayed	Problem is still occurring in the diagnostic circuit
⇨		Normal code is displayed	The problem is still occurring in a place other than in the diagnostic circuit (The diagnostic trouble code displayed first is either for a past problem or it is a secondary problem)
⇨	No problem symptoms exist		The problem occurred in the diagnostic circuit in the past
Normal Code Display ⇨	Problem symptoms exist	Normal code is displayed	The problem is still occurring in a place other than in the diagnostic circuit
⇨	No problem symptoms exist	Normal code is displayed	The problem occurred in a place other than in the diagnostic circuit in the past

Taking into account the points on the previous page, a flow chart showing how to proceed with troubleshooting using the diagnostic trouble code check is shown below. This flow chart shows how to utilize the diagnostic trouble code check effectively, then by carefully checking the results, indicates how to proceed either to diagnostic trouble code troubleshooting or to troubleshooting of problem symptoms table.

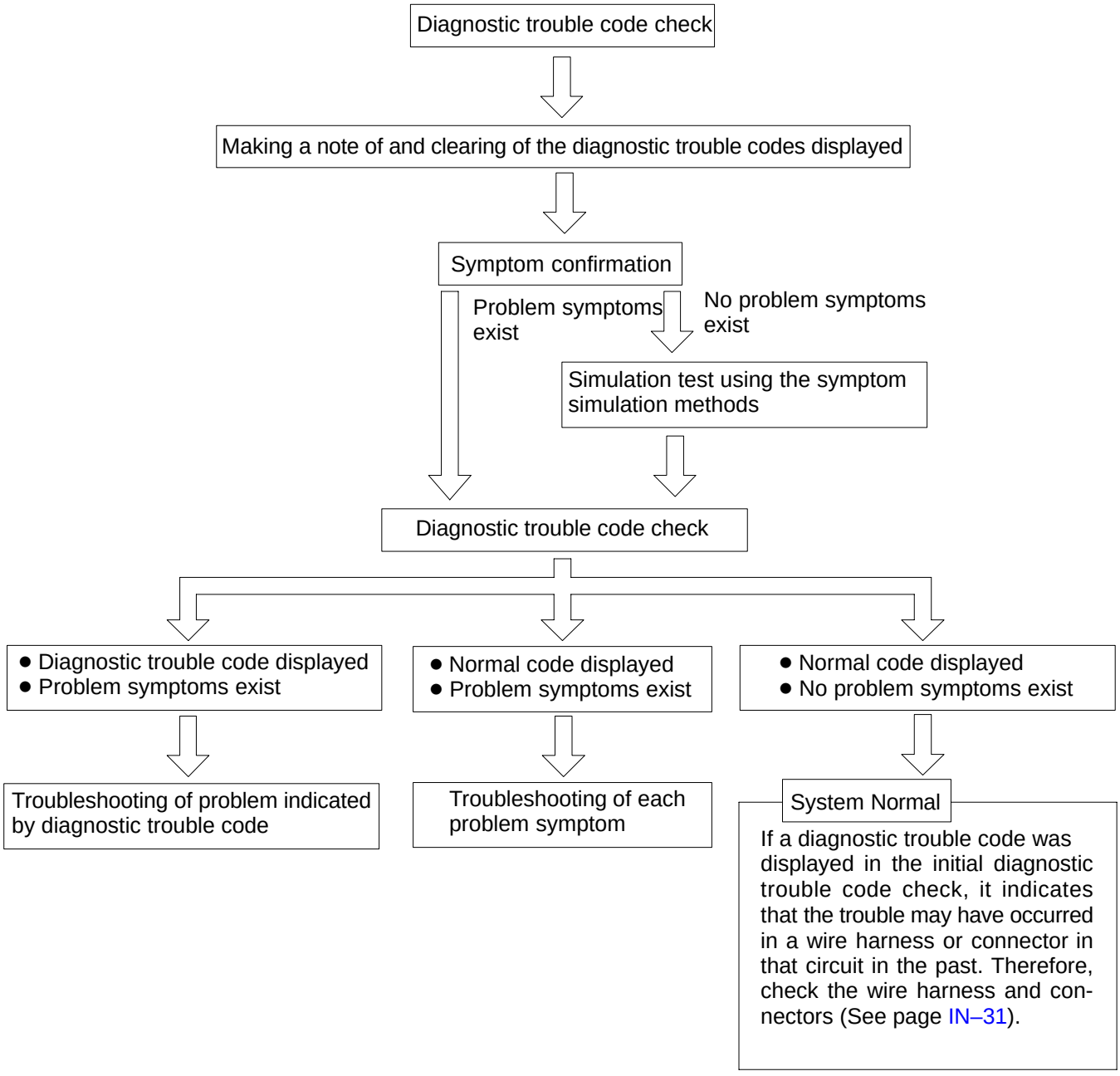

3. SYMPTOM SIMULATION

The most difficult case in troubleshooting is when there are no problem symptoms occurring. In such cases, a thorough customer problem analysis must be carried out, then simulate the same or similar conditions and environment in which the problem occurred in the customer's vehicle. No matter how much experience a technician has, or how skilled he may be, if he proceeds to troubleshoot without confirming the problem symptoms he will tend to overlook something important in the repair operation and make a wrong guess somewhere, which will only lead to a standstill. For example, for a problem which only occurs when the engine is cold, or for a problem which occurs due to vibration caused by the road during driving, etc., the problem can never be determined so long as the symptoms are confirmed with the engine hot condition or the vehicle at a standstill. Since vibration, heat or water penetration (moisture) is likely cause for problem which is difficult to reproduce, the symptom simulation tests introduced here are effective measures in that the external causes are applied to the vehicle in a stopped condition.

Important Points in the Symptom Simulation Test:

In the symptom simulation test, the problem symptoms should of course be confirmed, but the problem area or parts must also be found out. To do this, narrow down the possible problem circuits according to the symptoms before starting this test and connect a tester beforehand. After that, carry out the symptom simulation test, judging whether the circuit being tested is defective or normal and also confirming the problem symptoms at the same time. Refer to the problem symptoms table for each system to narrow down the possible causes of the symptom.

1	**VIBRATION METHOD: When vibration seems to be the major cause.**
CONNECTORS Slightly shake the connector vertically and horizontally. **WIRE HARNESS** Slightly shake the wire harness vertically and horizontally. The connector joint, fulcrum of the vibration, and body through portion are the major areas to be checked thoroughly.	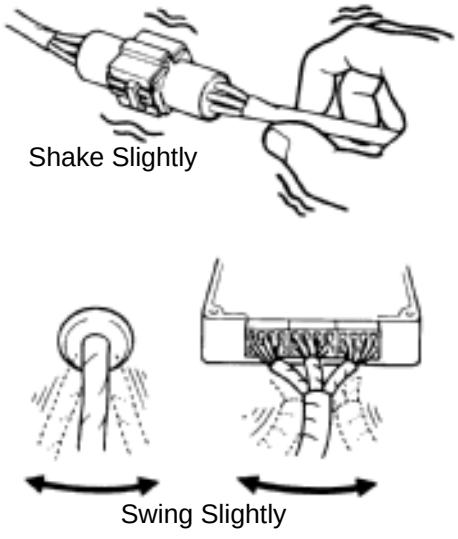
PARTS AND SENSOR Apply slight vibration with a finger to the part of the sensor considered to be the problem cause and check that the malfunction occurs. HINT: Applying strong vibration to relays may result in open relays.	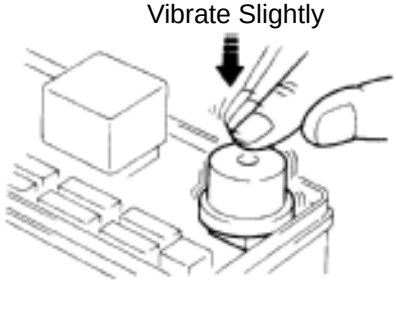

V07268

2	**HEAT METHOD: When the problem seems to occur when the suspect area is heated.**

Heat the component that is the likely cause of the malfunction with a hair dryer or similar object. Check to see if the malfunction occurs.

NOTICE:

(1) Do not heat to more than 60 ˚C (140 ˚F). (Temperature is limited not to damage the components.)

(2) Do not apply heat directly to parts in the ECU.

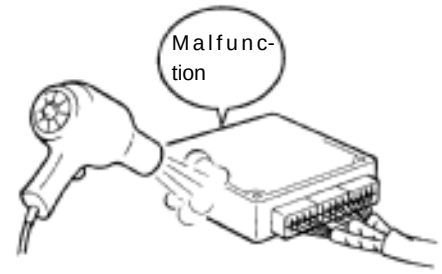

FI2334

3	**WATER SPRINKLING METHOD: When the malfunction seems to occur on a rainy day or in a high–humidity condition.**

Sprinkle water onto the vehicle and check to see if the malfunction occurs.

NOTICE:

(1) Never sprinkle water directly into the engine compartment, but indirectly change the temperature and humidity by applying water spray onto the radiator front surface.

(2) Never apply water directly onto the electronic components.

HINT:

If a vehicle is subject to water leakage, the leaked water may contaminate the ECU. When testing a vehicle with a water leakage problem, special caution must be taken.



FI6649

4	**OTHER: When a malfunction seems to occur when electrical load is excessive.**

Turn on all electrical loads including the heater blower, head lights, rear window defogger, etc. and check to see if the malfunction occurs.

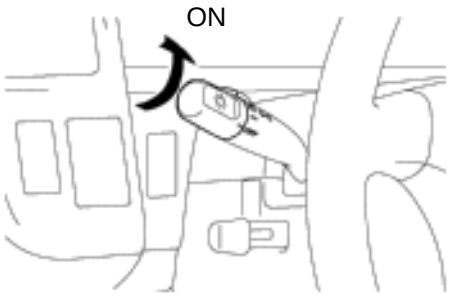

B02389

B02390

4. DIAGNOSTIC TROUBLE CODE CHART

The inspection procedure is shown in the table below. This table permits efficient and accurate troubleshooting using the diagnostic trouble codes displayed in the diagnostic trouble code check. Proceed with troubleshooting in accordance with the inspection procedure given in the diagnostic chart corresponding to the diagnostic trouble codes displayed. The engine diagnostic trouble code chart is shown below as an example.

- DTC No.
  Indicates the diagnostic trouble code.
- Page or Instructions
  Indicates the page where the inspection procedure for each circuit is to be found, or gives instructions for checking and repairs.

- Trouble Area
  Indicates the suspect area of the problem.

- Detection Item
  Indicates the system of the problem or contents of the problem.

DTC CHART (SAE Controlled)

HINT:
Parameters listed in the chart may not be exactly the same as your reading due to the type of instrument or other factors.

If a malfunction code is displayed during the DTC check mode, check the circuit for that code listed in the table below. For details of each code, turn to the page referred to under the "See page" for the respective "DTC No." in the DTC chart.

DTC No. (See page)	Detection Item	Trouble Area	MIL*	Memory
P0100 (DI–24)	Mass Air Flow Circuit Malfunction	● Open or short in mass air flow meter circuit ● Mass air flow meter ● ECM	○	○
P0101 (DI–28)	Mass Air Flow Circuit Range/ Performance Problem	● Mass air flow meter	○	○
P0110 (DI–29)	Intake Air Temp. Circuit Malfunction	● Open or short in intake air temp. sensor circuit ● Intake air temp. sensor ● ECM	○	○
P0115 (DI–33)	Engine Coolant Temp. Circuit Malfunction	● Open or short in engine coolant temp. sensor circuit ● Engine coolant temp. sensor ● ECM	○	○
P0116 (DI–37)	Engine Coolant Temp. Circuit Range/ Performance Problem	● Engine coolant temp. sensor ● Cooling system	○	○
	/Pedal Position Sensor/Switch nction	● Open or short in throttle position sensor circuit ● Throttle position sensor ● ECM		
	osition Sensor/ Switch rformance Prob-	● Throttle position sensor		

5. PROBLEM SYMPTOMS TABLE

The suspected circuits or parts for each problem symptom are shown in the table below. Use this table to troubleshoot the problem when a ”Normal” code is displayed in the diagnostic trouble code check but the problem is still occurring. Numbers in the table indicate the inspection order in which the circuits or parts should be checked.

HINT:

When the problem is not detected by the diagnostic system even though the problem symptom is present, it is considered that the problem is occurring outside the detection range of the diagnostic system, or that the problem is occurring in a system other than the diagnostic system.

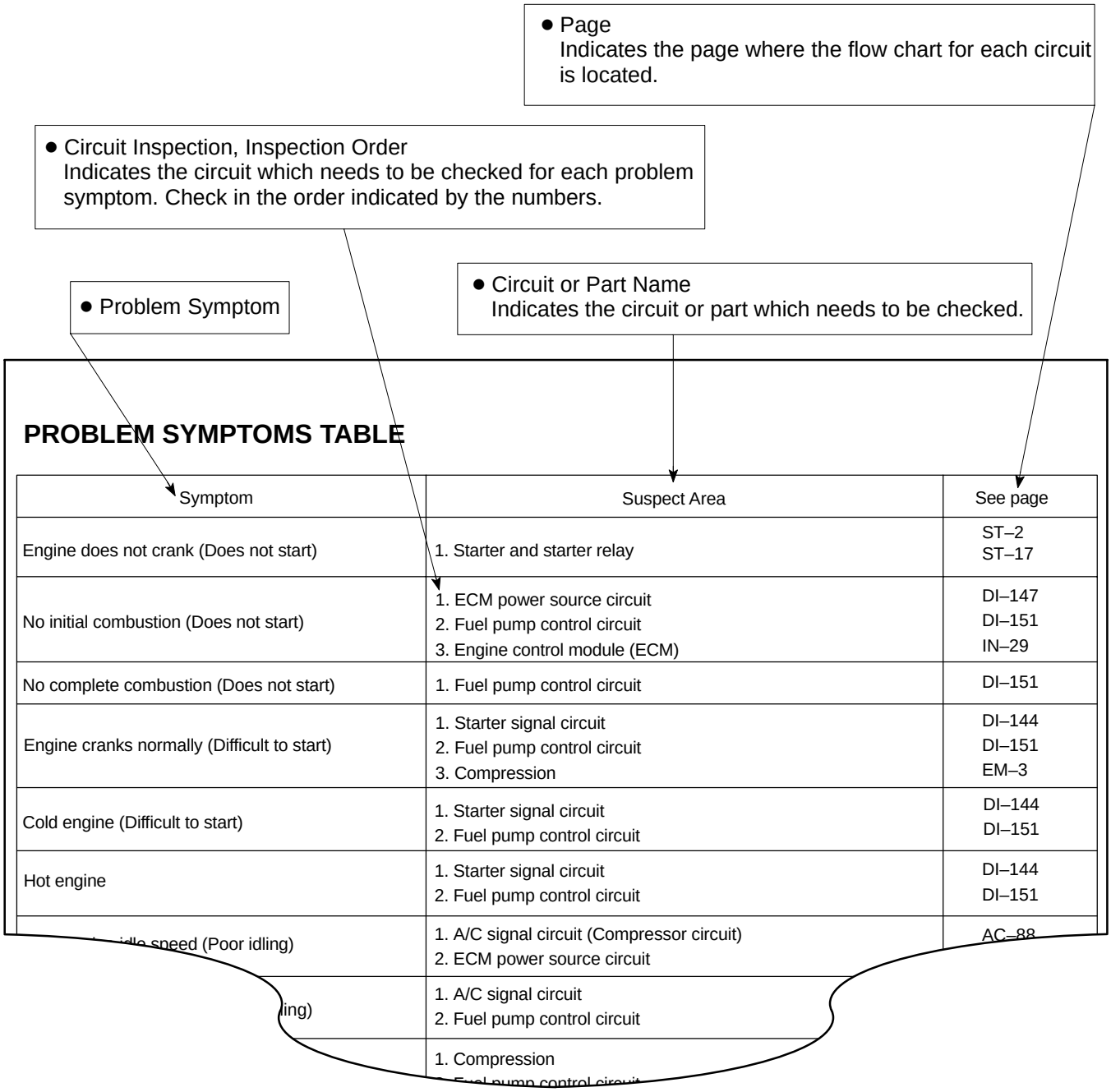

PROBLEM SYMPTOMS TABLE

Symptom	Suspect Area	See page
Engine does not crank (Does not start)	1. Starter and starter relay	ST–2 ST–17
No initial combustion (Does not start)	1. ECM power source circuit 2. Fuel pump control circuit 3. Engine control module (ECM)	DI–147 DI–151 IN–29
No complete combustion (Does not start)	1. Fuel pump control circuit	DI–151
Engine cranks normally (Difficult to start)	1. Starter signal circuit 2. Fuel pump control circuit 3. Compression	DI–144 DI–151 EM–3
Cold engine (Difficult to start)	1. Starter signal circuit 2. Fuel pump control circuit	DI–144 DI–151
Hot engine	1. Starter signal circuit 2. Fuel pump control circuit	DI–144 DI–151
idle speed (Poor idling)	1. A/C signal circuit (Compressor circuit) 2. ECM power source circuit	AC–88
ling)	1. A/C signal circuit 2. Fuel pump control circuit	
	1. Compression 2. Fuel pump control circuit	

6. CIRCUIT INSPECTION

How to read and use each page is shown below.

● Diagnostic Trouble Code No. and Detection Item

● Circuit Description
The major role and operation, etc. of the circuit and its component parts are explained.

DTC	P0325	Knock Sensor 1 Circuit Malfunction

CIRCUIT DESCRIPTION

Knock sensor is fitted to the cylinder block to detect engine knocking. This sensor contains a piezoelectric element which generates a voltage when it becomes deformed, which occurs when the cylinder block vibrates due to knocking. If engine knocking occurs, ignition timing is retarded to suppress it.

DTC No.	DTC Detecting Condition	Trouble Area
P0325	No knock sensor 1 signal to ECM with engine speed, 1,200 rpm or more.	● Open or short in knock sensor1 circuit ● Knock sensor 1 (looseness) ● ECM

If the ECM detects the above diagnosis conditions, it operates the fail safe function in which the corrective retard angle value is set to the maximum value.

● Indicates the diagnostic trouble code, diagnostic trouble code set parameter and suspect area of the problem.

WIRING DIAGRAM

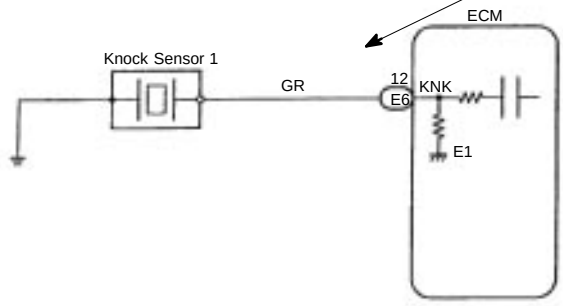

● Wiring Diagram
This shows a wiring diagram of the circuit.
Use this diagram together with ELECTRICAL WIRING DIAGRAM to thoroughly understand the circuit.
Wire colors are indicated by an alphabetical code.
B = Black, L = Blue, R = Red, BR = Brown,
LG = Light Green, V = Violet, G = Green,
O = Orange, W = White, GR = Gray, P = Pink,
Y = Yellow, SB = Sky Blue
The first letter indicates the basic wire color and the second letter indicates the color of the stripe.

V08423

● Indicates the position of the ignition switch during the check.

LOCK
Ignition Switch LOCK (OFF)

ON
Ignition Switch ON

START
Ignition Switch START

ACC
Ignition Switch ACC

● Inspection Procedure
Use the inspection procedure to determine if the circuit is normal or abnormal, and, if it is abnormal, use it to determine whether the problem is located in the sensors, actuators, wire harness or ECU.

INSPECTION PROCEDURE

1	**Check continuity between terminal KNK of ECM connector and body ground.**

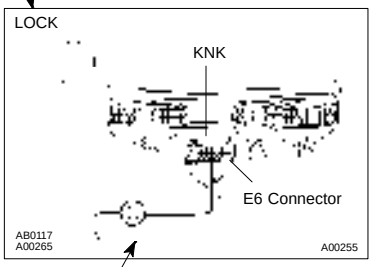

PREPARATION:
(a) Remove the glove compartment (See page SF–68).
(b) Disconnect the E6 connector of ECM.

CHECK:
Measure resistance between terminal KNK of ECM connector and body ground.

OK:
Resistance: 1 MΩ or higher

OK	**Go to step 3.**

NG

2	**Check knock sensor (See page SF–61).**

OK	**Replace knock sensor.**

● Indicates the place to check the voltage or resistance.
● Indicates the connector position to checked, from the front or back side.

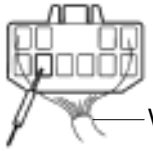

Check from the connector back side. (with harness)



Check from the connector front side. (without harness)
In this case, care must be taken not to bend the terminals.

● Indicates the condition of the connector of ECU during the check.

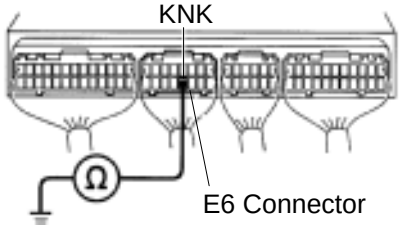

Connector being checked is connected.

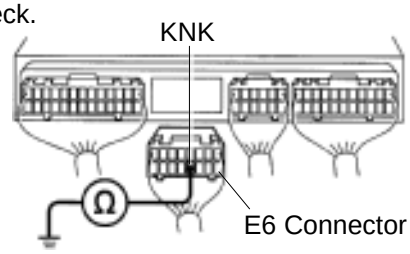

Connector being checked is disconnected.

V08425

IN05X–05

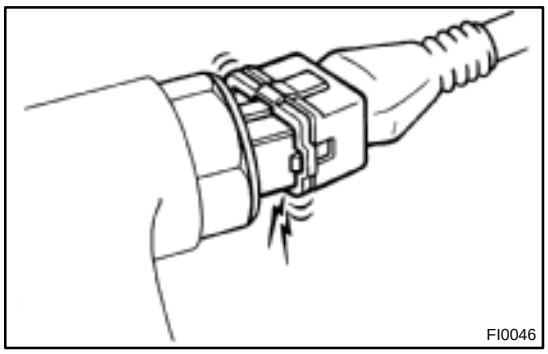
FI0046

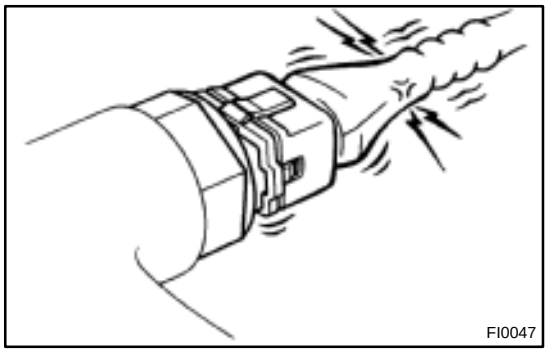
FI0047

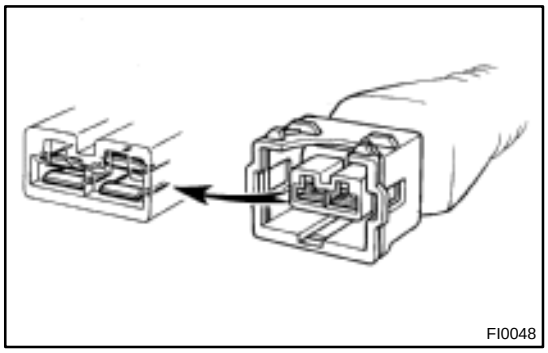
FI0048

HOW TO USE THE DIAGNOSTIC CHART AND INSPECTION PROCEDURE

1. CONNECTOR CONNECTION AND TERMINAL INSPECTION

- For troubleshooting, diagnostic trouble code charts or problem symptom table are provided for each circuit with detailed inspection procedures on the following pages.
- When all the component parts, wire harnesses and connectors of each circuit except the ECU are found to be normal in troubleshooting, then it is determined that the problem is in the ECU. Accordingly, if diagnosis is performed without the problem symptoms occurring, refer to Step 8 to replace the ECU. So always confirm that the problem symptoms are occurring, or proceed with inspection while using the symptom simulation method.
- The instructions ”Check wire harness and connector” and ”Check and replace ECU” which appear in the inspection procedure, are common and applicable to all diagnostic trouble codes. Follow the procedure outlined below whenever these instructions appear.

OPEN CIRCUIT:

This could be due to a disconnected wire harness, faulty contact in the connector, and a connector terminal pulled out, etc.

HINT:

- It is rarely the case that a wire is broken in the middle of it. Most cases occur at the connector. In particular, carefully check the connectors of sensors and actuators
- Faulty contact could be due to rusting of the connector terminals, to foreign materials entering terminals or a deformation of connector terminals. Simply disconnecting and reconnecting the connectors once changes the condition of the connection and may result in a return to normal operation. Therefore, in troubleshooting, if no abnormality is found in the wire harness and connector check, but the problem disappears after the check, then the cause is considered to be in the wire harness or connectors.

SHORT CIRCUIT:

This could be due to a contact between wire harness and the body ground or to a short circuit occurred inside the switch, etc.

HINT:

When there is a short circuit between the wire harness and body ground, check thoroughly whether the wire harness is caught in the body or is clamped properly.

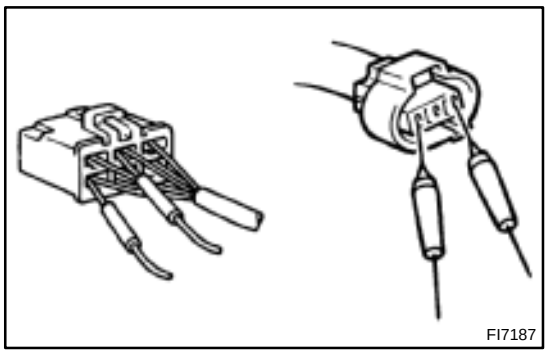
FI7187

2. CONNECTOR HANDLING

When inserting tester probes into a connector, insert them from the rear of the connector. When necessary, use mini test leads. For water resistant connectors which cannot be accessed from behind, take good care not to deform the connector terminals.

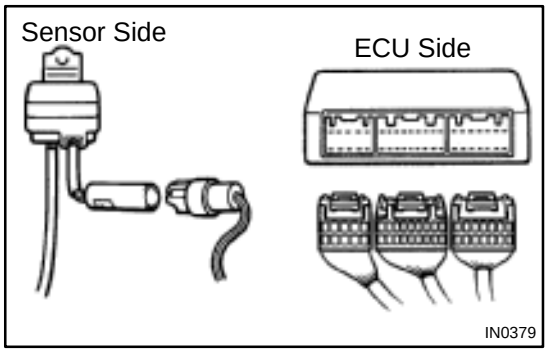

IN0379

3. CONTINUITY CHECK (OPEN CIRCUIT CHECK)

(a) Disconnect the connectors at both ECU and sensor sides.

(b) Measure the resistance between the applicable terminals of the connectors.

Resistance: 1 Ω or less

HINT:

Measure the resistance while lightly shaking the wire harness vertically and horizontally.

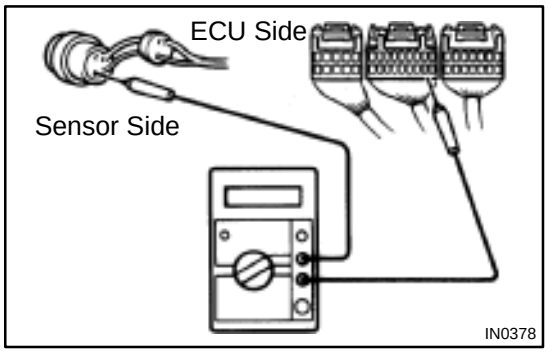

IN0378

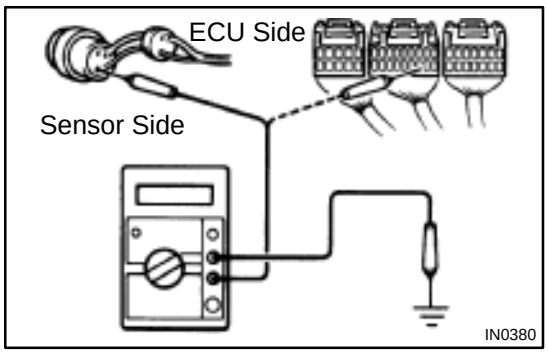

IN0380

4. RESISTANCE CHECK (SHORT CIRCUIT CHECK)

(a) Disconnect the connectors on both ends.

(b) Measure the resistance between the applicable terminals of the connectors and body ground. Be sure to carry out this check on the connectors on both ends.

Resistance: 1 MΩ or higher

HINT:

Measure the resistance while lightly shaking the wire harness vertically and horizontally.

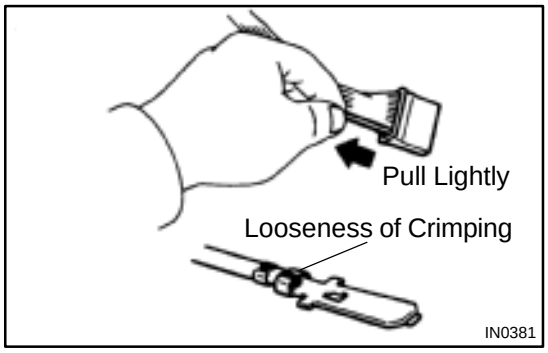

IN0381

5. VISUAL CHECK AND CONTACT PRESSURE CHECK

(a) Disconnect the connectors at both ends.

(b) Check for rust or foreign material, etc. in the terminals of the connectors.

(c) Check crimped portions for looseness or damage and check that the terminals are secured in lock portion.

HINT:

The terminals should not come out when pulled lightly from the back.

(d) Prepare a test male terminal and insert it in the female terminal, then pull it out.

NOTICE:

When testing a gold–plated female terminal, always use a gold–plated male terminal.

HINT:

When the test terminal is pulled out more easily than others, there may be poor contact in that section.

Fig. 1

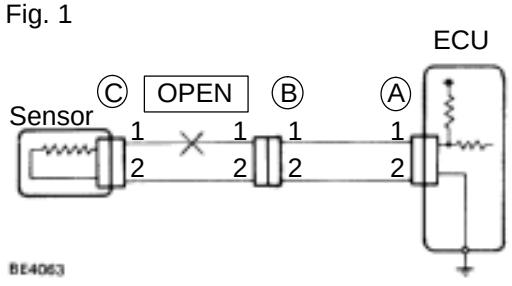

6. CHECK OPEN CIRCUIT

For the open circuit in the wire harness in Fig. 1, perform "(a) Continuity Check" or "(b) Voltage Check" to locate the section.

Fig. 2

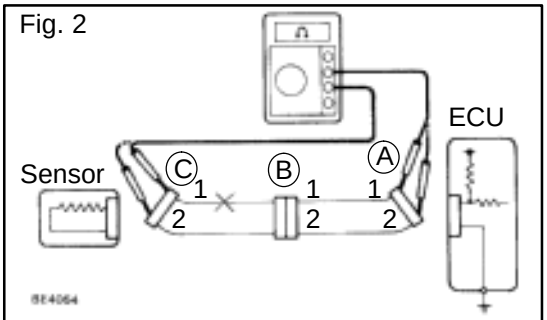

(a) Check the continuity.

(1) Disconnect connectors "A" and "C" and measure the resistance between them.

In the case of Fig. 2,

Between terminal 1 of connector "A" and terminal 1 of connector "C" → No continuity (open)

Between terminal 2 of connector "A" and terminal 2 of connector "C" → Continuity

Therefore, it is found out that there is an open circuit between terminal 1 of connector "A" and terminal 1 of connector "C".

Fig. 3

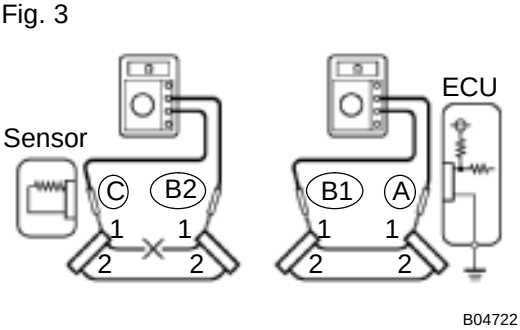

(2) Disconnect connector "B" and measure the resistance between them.

In the case of Fig. 3,

Between terminal 1 of connector "A" and terminal 1 of connector "B1" → Continuity

Between terminal 1 of connector "B2" and terminal 1 of connector "C" → No continuity (open)

Therefore, it is found out that there is an open circuit between terminal 1 of connector "B2" and terminal 1 of connector "C".

Fig. 4

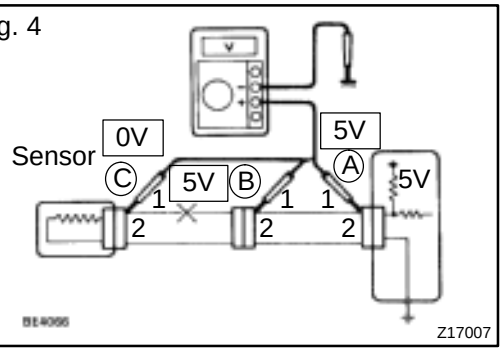

(b) Check the voltage.

In a circuit in which voltage is applied (to the ECU connector terminal), an open circuit can be checked for by conducting a voltage check.

As shown in Fig. 4, with each connector still connected, measure the voltage between body ground and terminal 1 of connector ”A” at the ECU 5V output terminal, terminal 1 of connector ”B”, and terminal 1 of connector ”C”, in that order.

If the results are:

5V: Between Terminal 1 of connector ”A” and Body Ground
5V: Between Terminal 1 of connector ”B” and Body Ground
0V: Between Terminal 1 of connector ”C” and Body Ground

Then it is found out that there is an open circuit in the wire harness between terminal 1 of ”B” and terminal 1 of ”C”.

Fig. 5

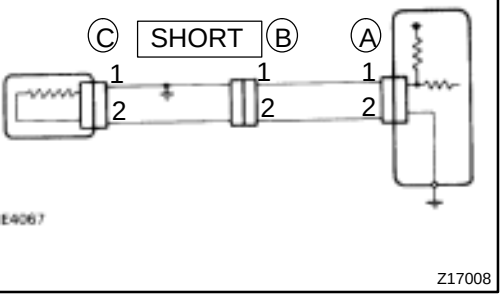

7. CHECK SHORT CIRCUIT

If the wire harness is ground shorted as in Fig. 5, locate the section by conducting a ”continuity check with ground”.

Fig. 6

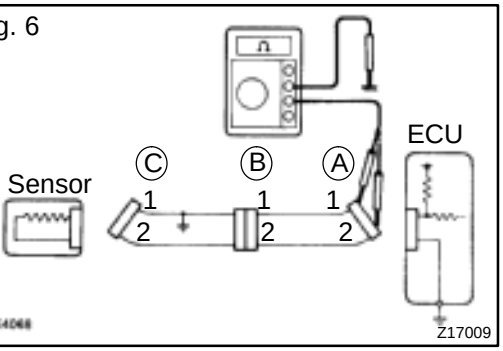

Check the continuity with ground.

(1) Disconnect connectors ”A” and ”C” and measure the resistance between terminal 1 and 2 of connector ”A” and body ground.

In the case of Fig. 6

Between terminal 1 of connector ”A” and body ground → Continuity (short)

Between terminal 2 of connector ”A” and body ground → No continuity

Therefore, it is found out that there is a short circuit between terminal 1 of connector ”A” and terminal 1 of connector ”C”.

Fig. 7

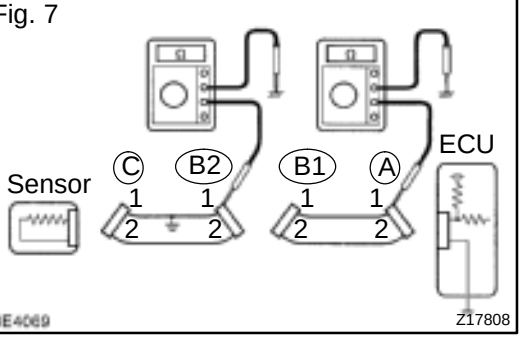

(2) Disconnect connector ”B” and measure the resistance between terminal 1 of connector ”A” and body ground, and terminal 1 of connector ”B2” and body ground.
Between terminal 1 of connector ”A” and body ground → No continuity
Between terminal 1 of connector ”B2” and body ground → Continuity (short)
Therefore, it is found out that there is a short circuit between terminal 1 of connector ”B2” and terminal 1 of connector ”C”.

8. CHECK AND REPLACE ECU

First check the ECU ground circuit. If it is faulty, repair it. If it is normal, the ECU could be faulty, so replace the ECU with a normal functioning one and check that the symptoms appear.

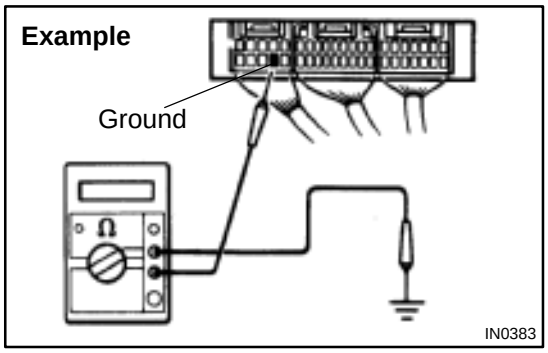

(1) Measure the resistance between the ECU ground terminal and the body ground.

Resistance: 1 Ω or less

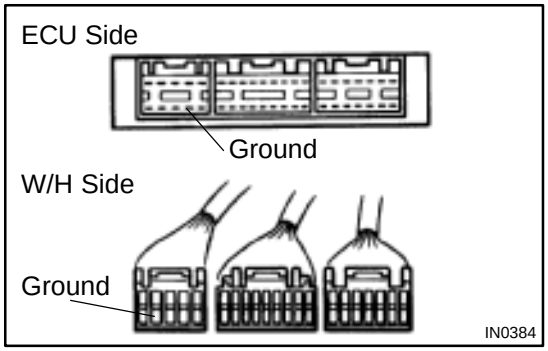

(2) Disconnect the ECU connector, check the ground terminals on the ECU side and the wire harness side for bend and check the contact pressure.

TERMS

ABBREVIATIONS USED IN THIS MANUAL

IN04Q–03

Abbreviations	Meaning
ABS	Anti–Lock Brake System
AC	Alternating Current
ACC	Accessory
ACIS	Acoustic Control Induction System
ACSD	Automatic Cold Start Device
A.D.D.	Automatic Disconnecting Differential
A/F	Air–Fuel Ratio
AHC	Active Height Control Suspension
ALR	Automatic Locking Retractor
ALT	Alternator
AMP	Amplifier
ANT	Antenna
APPROX.	Approximately
A/T	Automatic Transmission (Transaxle)
ATF	Automatic Transmission Fluid
AUTO	Automatic
AUX	Auxiliary
AVG	Average
AVS	Adaptive Variable Suspension
BACS	Boost Altitude Compensation System
BAT	Battery
BDC	Bottom Dead Center
B/L	Bi–Level
B/S	Bore–Stroke Ratio
BTDC	Before Top Dead Center
BVSV	Bimetallic Vacuum Switching Valve
Calif.	California
CB	Circuit Breaker
CCo	Catalytic Converter For Oxidation
CD	Compact Disc
CF	Cornering Force
CG	Center Of Gravity
CH	Channel
COMB.	Combination
CPE	Coupe
CPS	Combustion Pressure Sensor
CPU	Central Processing Unit
CRS	Child Restraint System
CTR	Center
C/V	Check Valve
CV	Control Valve
CW	Curb Weight

DC	Direct Current
DEF	Defogger
DFL	Deflector
DIFF.	Differential
DIFF. LOCK	Differential Lock
D/INJ	Direct Injection
DLI	Distributorless Ignition
DOHC	Double Over Head Cam
DP	Dash Pot
DS	Dead Soak
DSP	Digital Signal Processor
ECAM	Engine Control And Measurement System
ECD	Electronic Controlled Diesel
ECDY	Eddy Current Dynamometer
ECU	Electronic Control Unit
ED	Electro–Deposited Coating
EDU	Electronic Driving Unit
EDIC	Electric Diesel Injection Control
EFI	Electronic Fuel Injection
E/G	Engine
EGR–VM	Egr–Vacuum Modulator
ELR	Emergency Locking Retractor
ENG	Engine
ESA	Electronic Spark Advance
ETCS	Electronic Throttle Control System
EVP	Evaporator
E–VRV	Electric Vacuum Regulating Valve
EXH	Exhaust
FE	Fuel Economy
FF	Front–Engine Front–Wheel–Drive
F/G	Fuel Gage
FIPG	Formed In Place Gasket
FL	Fusible Link
F/P	Fuel Pump
FPU	Fuel Pressure Up
Fr	Front
FR	Front–Engine Rear–Wheel–Drive
F/W	Flywheel
FW/D	Flywheel Damper
FWD	Front–Wheel–Drive
GAS	Gasoline
GND	Ground
HAC	High Altitude Compensator
H/B	Hatchback
H–FUSE	High Current Fuse
HI	High

HID	High Intensity Discharge (Head Lamp)
HSG	Housing
HT	Hard Top
HWS	Heated Windshield System
IAC	Idle Air Control
IC	Integrated circuit
IDI	Indirect Diesel Injection
IFS	Independent Front Suspension
IG	Ignition
IIA	Integrated Ignition Assembly
IN	Intake (Manifold, Valve)
INT	Intermittent
I/P	Instrument Panel
IRS	Independent Rear Suspension
J/B	Junction Block
J/C	Junction Connector
KD	Kick–Down
LAN	Local Area Network
LB	Liftback
LCD	Liquid Crystal Display
LED	Light Emitting Diode
LH	Left–Hand
LHD	Left–Hand Drive
L/H/W	Length, Height, Width
LLC	Long–Life Coolant
LNG	Liquified Natural Gas
LO	Low
LPG	Liquified Petroleum Gas
LSD	Limited Slip Differential
LSP & PV	Load Sensing Proportioning And Bypass Valve
LSPV	Load Sensing Proportioning Valve
MAX.	Maximum
MIC	Microphone
MIL	Malfunction Indicator Lamp
MIN.	Minimum
MP	Multipurpose
MPX	Multiplex Communication System
M/T	Manual Transmission
MT	Mount
MTG	Mounting
N	Neutral
NA	Natural Aspiration
No.	Number
O/D	Overdrive
OEM	Original Equipment Manufacturing
OHC	Overhead Camshaft

OHV	Overhead Valve
OPT	Option
O/S	Oversize
P & BV	Proportioning And Bypass Valve
PCS	Power Control System
PCV	Positive Crankcase Ventilation
PKB	Parking Brake
PPS	Progressive Power Steering
PS	Power Steering
PTO	Power Take–Off
R & P	Rack And Pinion
R/B	Relay Block
RBS	Recirculating Ball Type Steering
R/F	Reinforcement
RFS	Rigid Front Suspension
RRS	Rigid Rear Suspension
RH	Right–Hand
RHD	Right–Hand Drive
RLY	Relay
ROM	Read Only Memory
Rr	Rear
RR	Rear–Engine Rear–Wheel Drive
RWD	Rear–Wheel Drive
SDN	Sedan
SEN	Sensor
SICS	Starting Injection Control System
SOC	State Of Charge
SOHC	Single Overhead Camshaft
SPEC	Specification
SPI	Single Point Injection
SRS	Supplemental Restraint System
SSM	Special Service Materials
SST	Special Service Tools
STD	Standard
STJ	Cold–Start Fuel Injection
SW	Switch
SYS	System
T/A	Transaxle
TACH	Tachometer
TBI	Throttle Body Electronic Fuel Injection
TC	Turbocharger
TCCS	TOYOTA Computer–Controlled System
TCV	Timing Control Valve
TDC	Top Dead Center
TEMP.	Temperature
TEMS	TOYOTA Electronic Modulated Suspension

TIS	Total Information System For Vehicle Development
T/M	Transmission
TMC	TOYOTA Motor Corporation
TMMK	TOYOTA Motor Manufacturing Kentucky, Inc.
TRAC	Traction Control System
TURBO	Turbocharge
U/D	Underdrive
U/S	Undersize
VCV	Vacuum Control Valve
VENT	Ventilator
VIN	Vehicle Identification Number
VPS	Variable Power Steering
VSC	Vehicle Skid Control Vehicle Stability Control
VSV	Vacuum Switching Valve
VTV	Vacuum Transmitting Valve
w/	With
WGN	Wagon
W/H	Wire Harness
w/o	Without
1st	First
2nd	Second
2WD	Two Wheel Drive Vehicle (4x2)
4WD	Four Wheel Drive Vehicle (4x4)

IN0CI–01

GLOSSARY OF SAE AND TOYOTA TERMS

This glossary lists all SAE–J1930 terms and abbreviations used in this manual in compliance with SAE recommendations, as well as their TOYOTA equivalents.

SAE ABBREVIATIONS	SAE TERMS	TOYOTA TERMS ( )—ABBREVIATIONS
A/C	Air Conditioning	Air Conditioner
ACL	Air Cleaner	Air Cleaner, A/CL
AIR	Secondary Air Injection	Air Injection (AI)
AP	Accelerator Pedal	–
B+	Battery Positive Voltage	+B, Battery Voltage
BARO	Barometric Pressure	HAC
CAC	Charge Air Cooler	Intercooler
CARB	Carburetor	Carburetor
CFI	Continuous Fuel Injection	–
CKP	Crankshaft Position	Crank Angle
CL	Closed Loop	Closed Loop
CMP	Camshaft Position	Cam Angle
CPP	Clutch Pedal Position	–
CTOX	Continuous Trap Oxidizer	–
CTP	Closed Throttle Position	LL ON, Idle ON
DFI	Direct Fuel Injection (Diesel)	Direct Injection (DI)
DI	Distributor Ignition	–
DLC1 DLC2 DLC3	Data Link Connector 1 Data Link Connector 2 Data Link Connector 3	1: Check Connector 2: Total Diagnosis Comunication Link (TDCL) 3: OBD II Diagnostic Connector
DTC	Diagnostic Trouble Code	Diagnostic Code
DTM	Diagnostic Test Mode	–
ECL	Engine Control Level	–
ECM	Engine Control Module	Engine ECU (Electronic Control Unit)
ECT	Engine Coolant Temperature	Coolant Temperature, Water Temperature (THW)
EEPROM	Electrically Erasable Programmable Read Only Memory	Electrically Erasable Programmable Read Only Memory (EEPROM), Erasable Programmable Read Only Memory (EPROM)
EFE	Early Fuel Evaporation	Cold Mixture Heater (CMH), Heat Control Valve (HCV)
EGR	Exhaust Gas Recirculation	Exhaust Gas Recirculation (EGR)
EI	Electronic Ignition	TOYOTA Distributorless Ignition (TDI)
EM	Engine Modification	Engine Modification (EM)
EPROM	Erasable Programmable Read Only Memory	Programmable Read Only Memory (PROM)
EVAP	Evaporative Emission	Evaporative Emission Control (EVAP)
FC	Fan Control	–
FEEPROM	Flash Electrically Erasable Programmable Read Only Memory	–
FEPROM	Flash Erasable Programmable Read Only Memory	–
FF	Flexible Fuel	–
FP	Fuel Pump	Fuel Pump
GEN	Generator	Alternator
GND	Ground	Ground (GND)

HO2S	Heated Oxygen Sensor	Heated Oxygen Sensor (HO_2S)
IAC	Idle Air Control	Idle Speed Control (ISC)
IAT	Intake Air Temperature	Intake or Inlet Air Temperature
ICM	Ignition Control Module	–
IFI	Indirect Fuel Injection	Indirect Injection (IDL)
IFS	Inertia Fuel–Shutoff	–
ISC	Idle Speed Control	–
KS	Knock Sensor	Knock Sensor
MAF	Mass Air Flow	Air Flow Meter
MAP	Manifold Absolute Pressure	Manifold Pressure Intake Vacuum
MC	Mixture Control	Electric Bleed Air Control Valve (EBCV) Mixture Control Valve (MCV) Electric Air Control Valve (EACV)
MDP	Manifold Differential Pressure	–
MFI	Multiport Fuel Injection	Electronic Fuel Injection (EFI)
MIL	Malfunction Indicator Lamp	Check Engine Lamp
MST	Manifold Surface Temperature	–
MVZ	Manifold Vacuum Zone	–
NVRAM	Non–Volatile Random Access Memory	–
O2S	Oxygen Sensor	Oxygen Sensor, O_2 Sensor (O_2S)
OBD	On–Board Diagnostic	On–Board Diagnostic System (OBD)
OC	Oxidation Catalytic Converter	Oxidation Catalyst Convert (OC), CCo
OP	Open Loop	Open Loop
PAIR	Pulsed Secondary Air Injection	Air Suction (AS)
PCM	Powertrain Control Module	–
PNP	Park/Neutral Position	–
PROM	Programmable Read Only Memory	–
PSP	Power Steering Pressure	–
PTOX	Periodic Trap Oxidizer	Diesel Particulate Filter (DPF) Diesel Particulate Trap (DPT)
RAM	Random Access Memory	Random Access Memory (RAM)
RM	Relay Module	–
ROM	Read Only Memory	Read Only Memory (ROM)
RPM	Engine Speed	Engine Speed
SC	Supercharger	Supercharger
SCB	Supercharger Bypass	E–ABV
SFI	Sequential Multiport Fuel Injection	Electronic Fuel Injection (EFI), Sequential Injection
SPL	Smoke Puff Limiter	–
SRI	Service Reminder Indicator	–
SRT	System Readiness Test	–
ST	Scan Tool	–
TB	Throttle Body	Throttle Body
TBI	Throttle Body Fuel Injection	Single Point Injection Central Fuel Injection (Ci)
TC	Turbocharger	Turbocharger
TCC	Torque Converter Clutch	Torque Converter

TCM	Transmission Control Module	Transmission ECU, ECT ECU
TP	Throttle Position	Throttle Position
TR	Transmission Range	–
TVV	Thermal Vacuum Valve	Bimetallic Vacuum Switching Valve (BVSV) Thermostatic Vacuum Switching Valve (TVSV)
TWC	Three–Way Catalytic Converter	Three–Way Catalytic (TWC) Manifold Converter CC_{RO}
TWC+OC	Three–Way + Oxidation Catalytic Converter	CC_R + CCo
VAF	Volume Air Flow	Air Flow Meter
VR	Voltage Regulator	Voltage Regulator
VSS	Vehicle Speed Sensor	Vehicle Speed Sensor
WOT	Wide Open Throttle	Full Throttle
WU–OC	Warm Up Oxidation Catalytic Converter	–
WU–TWC	Warm Up Three–Way Catalytic Converter	–
3GR	Third Gear	–
4GR	Fourth Gear	–

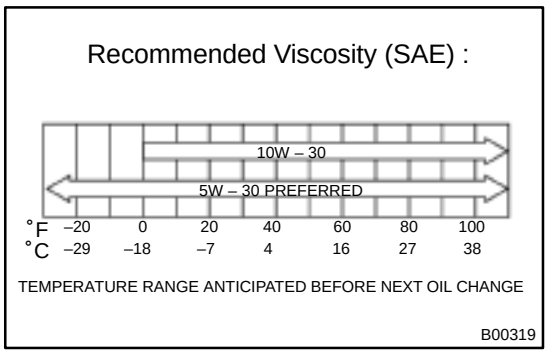

OIL AND FILTER

LU03H–03

INSPECTION

1. CHECK ENGINE OIL QUALITY

Check the oil for deterioration, entry of water, discoloring or thinning.

If the quality is visibly poor, replace the oil.

Oil grade:

API grade SJ, Energy–Conserving or ILSAC multigrade engine oil. SAE 5W–30 is the best choice for your vehicle, for good fuel economy, and good starting in cold weather.

2. CHECK ENGINE OIL LEVEL

After warming up the engine and then 5 minutes after the engine stop, oil level should be between ”L” and ”F” of the dipstick. If low, check for leakage and add oil up to ”F” mark.

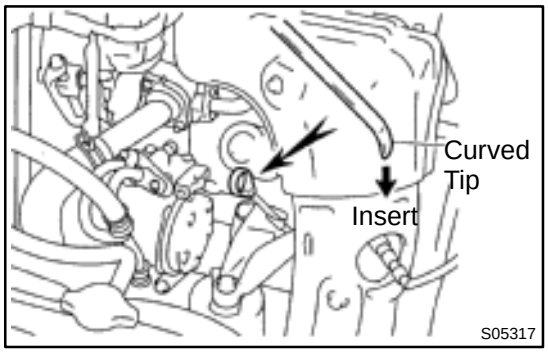

NOTICE:

- ★ **Do not fill with engine oil above the ”F” mark.**
- ★ **When inserting the oil dipstick, insert the curved tip of the dipstick facing the same direction as the curve of the guide.**
- ★ **If the dipstick gets caught while inserting it, do not force it in. Reconfirm the direction of the dipstick.**

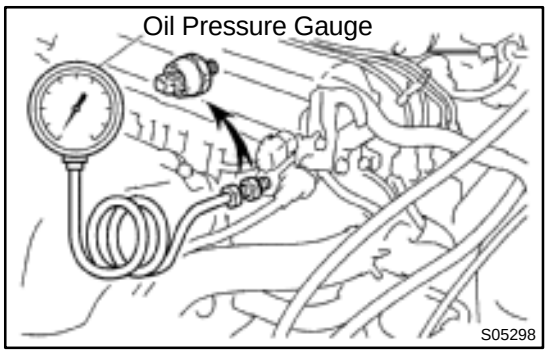

3. REMOVE OIL PRESSURE SWITCH AND INSTALL OIL PRESSURE GAUGE

4. WARM UP ENGINE

Allow the engine to warm up to normal operating temperature.

5. CHECK OIL PRESSURE

Oil pressure:

At idle	29 kPa (0.3 kgf/cm^2, 4.3 psi) or more
At 3,000 rpm	245 – 490 kPa (2.5 – 5.0 kgf/cm^2, 36 – 71 psi)

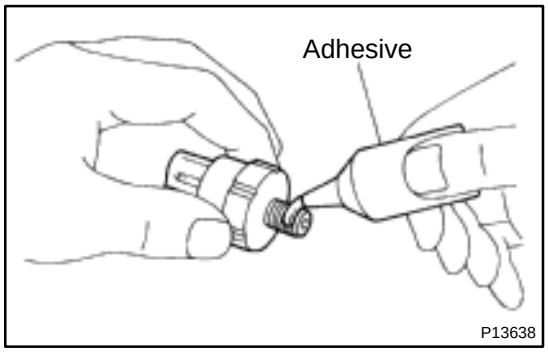

6. REMOVE OIL PRESSURE GAUGE AND REINSTALL OIL PRESSURE SWITCH

(a) Remove the oil pressure gauge.

(b) Apply adhesive to 2 or 3 threads of the oil pressure switch.

Adhesive:

Part No. 08833–00080, THREE BOND 1344, LOCTITE 242 or equivalent

(c) Reinstall the oil pressure switch.

7. START ENGINE AND CHECK FOR OIL LEAKS

LU03I–03

REPLACEMENT

CAUTION:

- ★ **Prolonged and repeated contact with mineral oil will result in the removal of natural fats from the skin, leading to dryness, irritation and dermatitis. In addition, used engine oil contains potentially harmful contaminants which may cause skin cancer.**
- ★ **Care should be taken, therefore, when changing engine oil to minimize the frequency and length of time your skin is exposed to used engine oil. Protective clothing and gloves that cannot be penetrated by oil should be worn. The skin should be thoroughly washed with soap and water, or use water–less hand cleaner, to remove any used engine oil. Do not use gasoline, thinners, or solvents.**
- ★ **In order to preserve the environment, used oil and used oil filters must be disposed of only at designated disposal sites.**

1. DRAIN ENGINE OIL

(a) Remove the oil filler cap.

(b) Remove the oil drain plug, and drain the oil into a container.

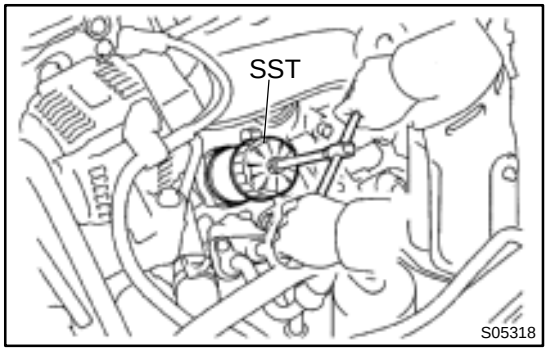

2. REPLACE OIL FILTER

(a) Using SST, remove the oil filter.
SST 09228–06501

(b) Clean the oil filter contact surface on the oil filter mounting.

(c) Lubricate the filter rubber gasket with clean engine oil.

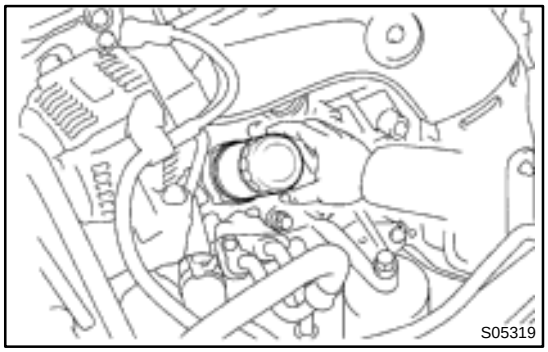

(d) Tighten the oil filter by hand until the rubber gasket contacts the seat of the filter mounting.

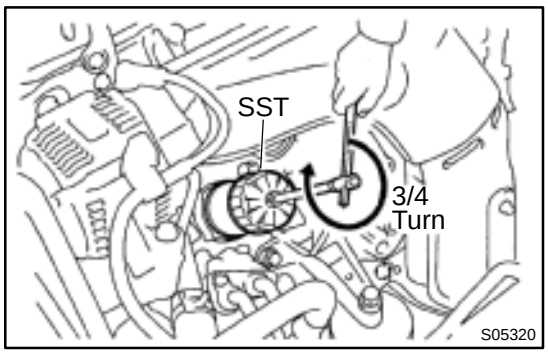

(e) Using SST, give it an additional 3/4 turn to seat the filter.
SST 09228–06501

3. FILL WITH ENGINE OIL

(a) Clean and install the oil drain plug with a new gasket.
Torque: 37 N·m (375 kgf·cm, 27 ft·lbf)

(b) Fill with new engine oil.
Capacity:

Drain and refill	w/ Oil filter change	3.6 liters (3.8 US qts, 3.2 lmp. qts)
	w/o Oil filter change	3.4 liters (3.6 US qts, 3.0 lmp. qts)
Dry fill	w/ Oil cooler	4.3 liters (4.5 US qts, 3.8 lmp. qts)
	w/o Oil cooler	4.2 liters (4.4 US qts, 3.7 lmp. qts)

(c) Reinstall the oil filler cap.

4. START ENGINE AND CHECK FOR OIL LEAKS

5. RECHECK ENGINE OIL LEVEL

OIL PUMP

COMPONENTS

LU03J–03

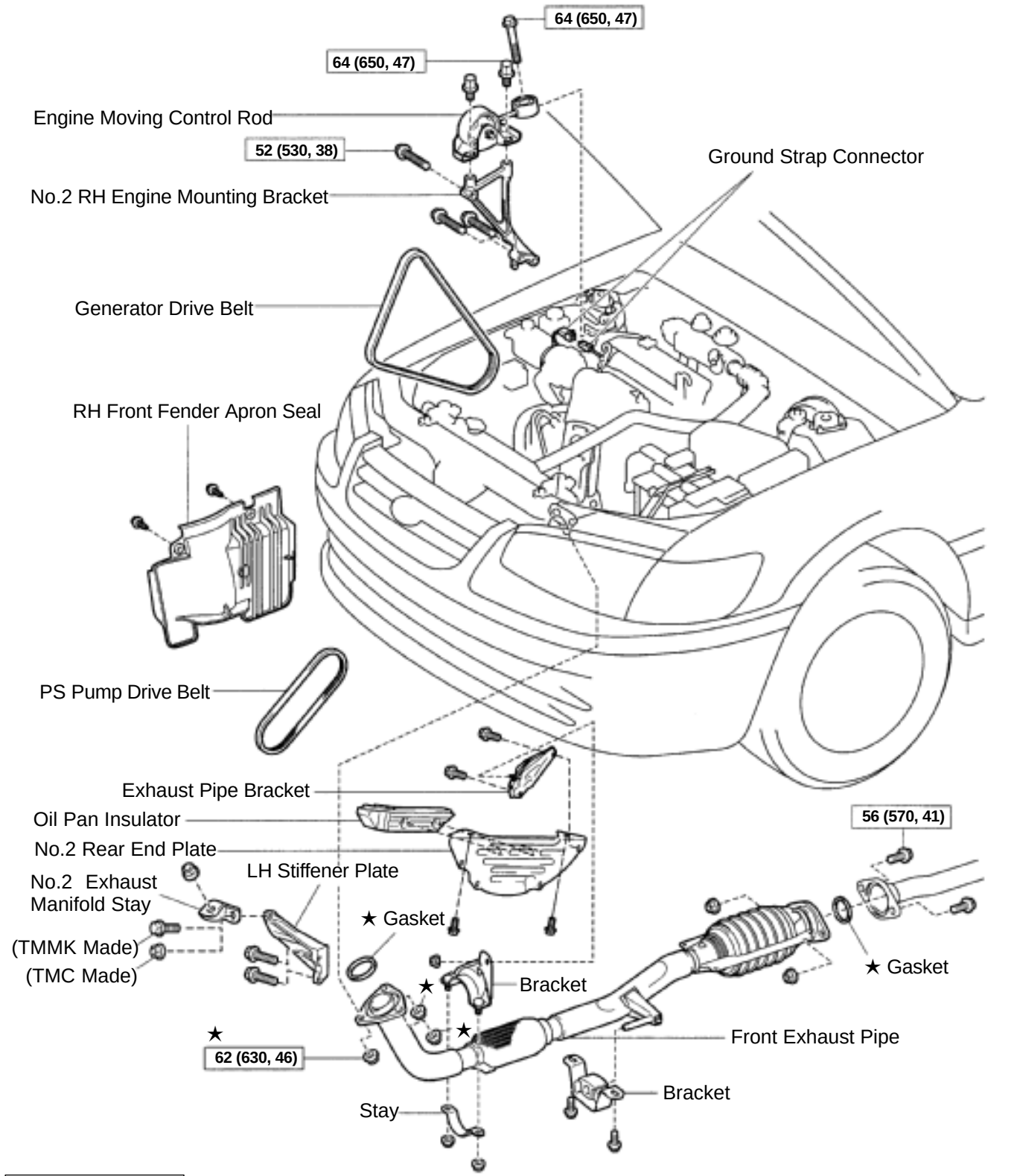

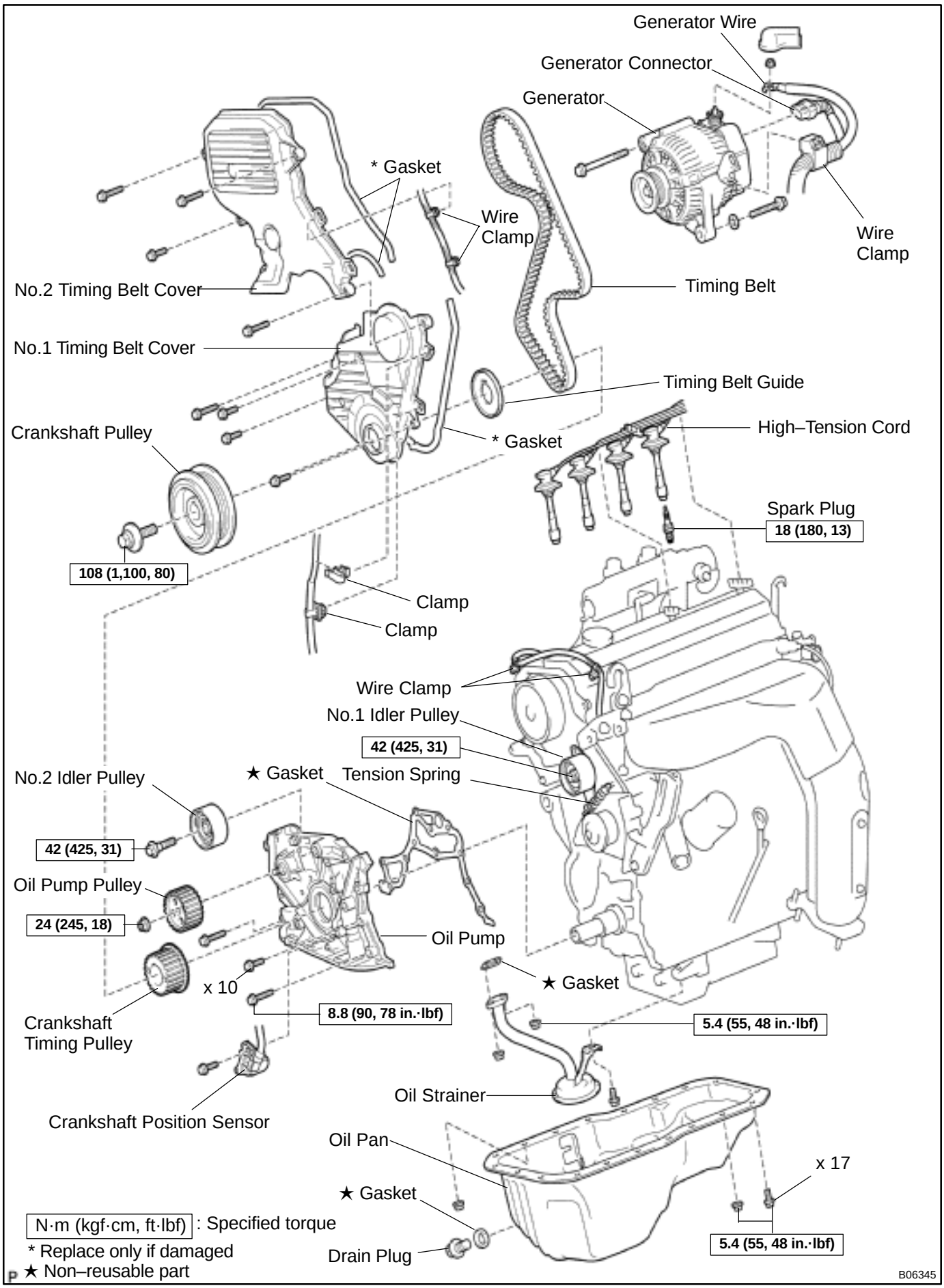
Generator Wire
Generator Connector
Generator
* Gasket
Wire Clamp
Wire Clamp
No.2 Timing Belt Cover
Timing Belt
No.1 Timing Belt Cover
Timing Belt Guide
Crankshaft Pulley
* Gasket
High–Tension Cord
Spark Plug
18 (180, 13)
108 (1,100, 80)
Clamp
Clamp
Wire Clamp
No.1 Idler Pulley
42 (425, 31)
No.2 Idler Pulley
★ Gasket
Tension Spring
42 (425, 31)
Oil Pump Pulley
24 (245, 18)
Oil Pump
x 10
★ Gasket
8.8 (90, 78 in.·lbf)
5.4 (55, 48 in.·lbf)
Crankshaft Timing Pulley
Oil Strainer
Crankshaft Position Sensor
Oil Pan
x 17
★ Gasket
Drain Plug
5.4 (55, 48 in.·lbf)
N·m (kgf·cm, ft·lbf) : Specified torque
* Replace only if damaged
★ Non–reusable part
B06345

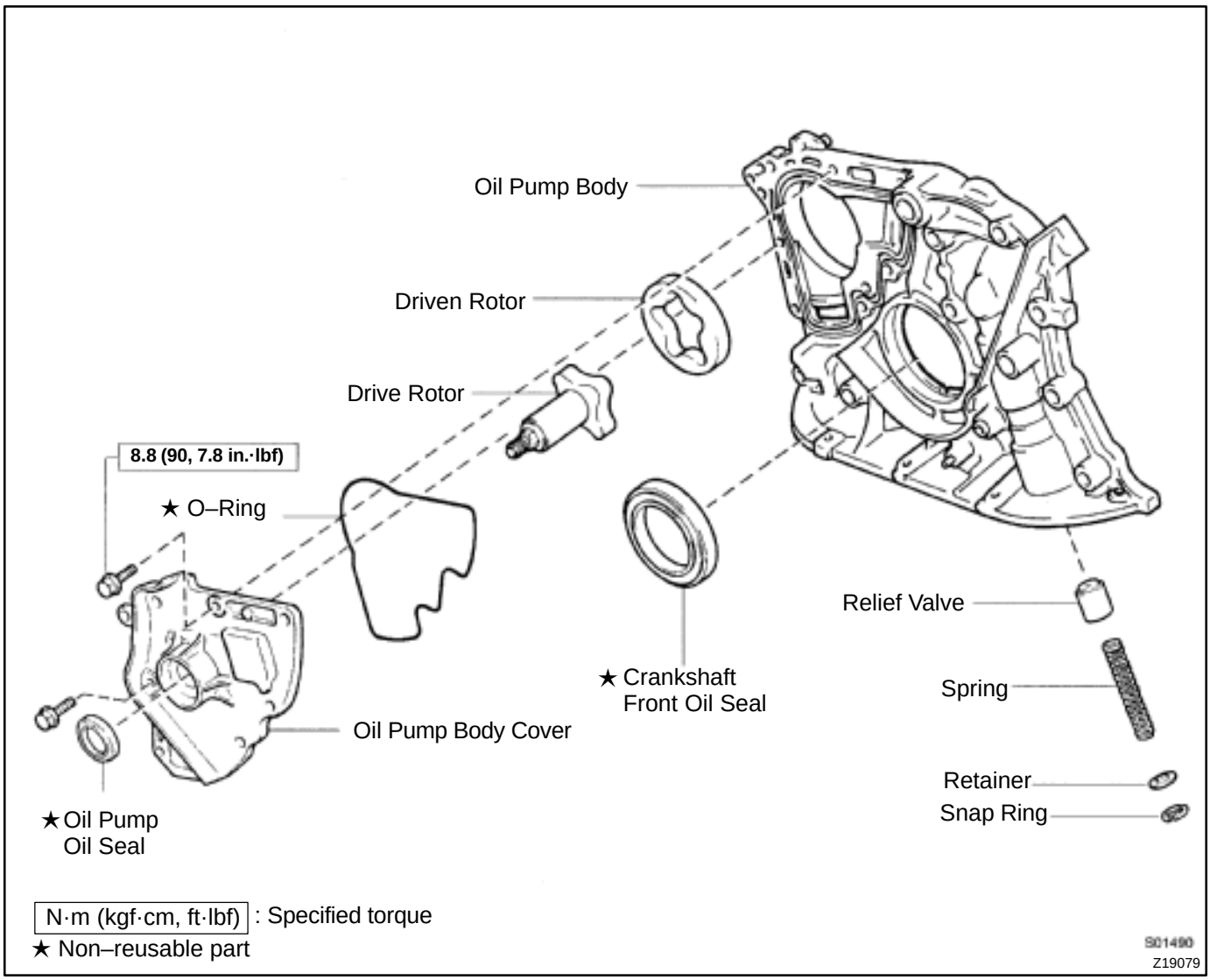
Oil Pump Body
Driven Rotor
Drive Rotor
8.8 (90, 7.8 in.·lbf)
★ O–Ring
Relief Valve
★ Crankshaft
Front Oil Seal
Spring
Oil Pump Body Cover
Retainer
Snap Ring
★Oil Pump
Oil Seal
N·m (kgf·cm, ft·lbf) : Specified torque
★ Non–reusable part
S01490
Z19079

LU03K–03

REMOVAL

HINT:

When repairing the oil pump, the oil pan and strainer should be removed and cleaned.

1. **DRAIN ENGINE OIL**
2. **REMOVE FRONT EXHAUST PIPE (See page EM–69)**
3. **REMOVE NO.2 EXHAUST MANIFOLD STAY AND LH STIFFENER PLATE (See page EM–69)**
4. **REMOVE EXHAUST PIPE BRACKET, OIL PAN INSULATOR AND NO.2 REAR END PLATE (See page EM–69)**

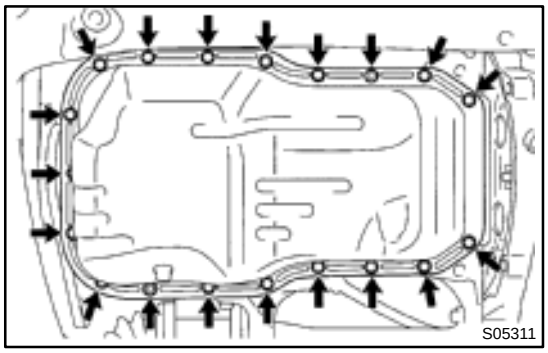

5. **REMOVE OIL PAN**

(a) Remove the oil dipstick.

(b) Remove the 17 bolts and 2 nuts.

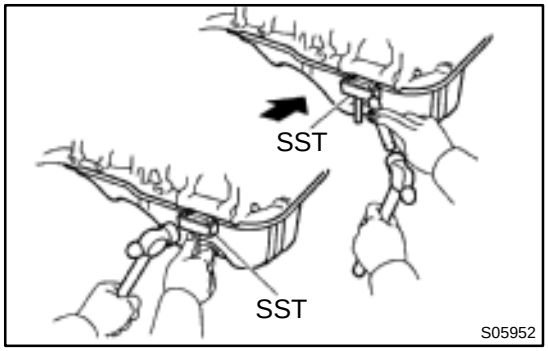

(c) Insert the blade of SST between the cylinder block and oil pan, and cut off applied sealer and remove the oil pan.
SST 09032–00100

NOTICE:

- ★ **Do not use SST for the oil pump body side and rear oil seal retainer.**
- ★ **Be careful not to damage the oil pan flange.**

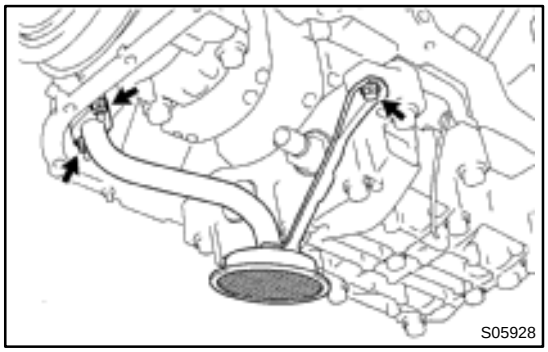

6. **REMOVE OIL STRAINER**

Remove the bolt, 2 nuts, oil strainer and gasket.

7. **REMOVE TIMING BELT (See page EM–17)**
8. **REMOVE NO.2 IDLER PULLEY**

Remove the bolt and idler pulley.

9. **REMOVE CRANKSHAFT TIMING PULLEY (See page EM–17)**
10. **REMOVE OIL PUMP PULLEY (See page EM–17)**

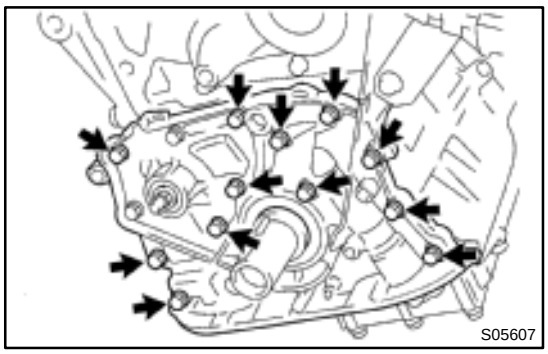

11. REMOVE OIL PUMP

Remove the 12 bolts, oil pump and gasket.

LU03L–03

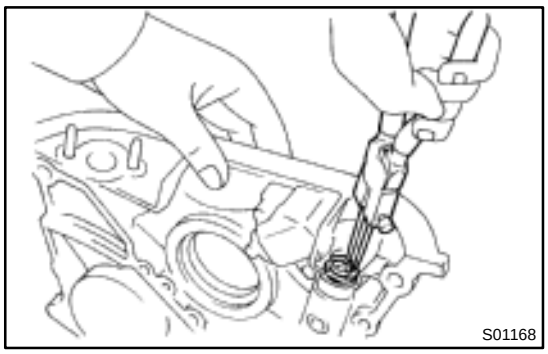

DISASSEMBLY

1. REMOVE RELIEF VALVE

(a) Using snap ring pliers, remove the snap ring.
(b) Remove the retainer, spring and relief valve.

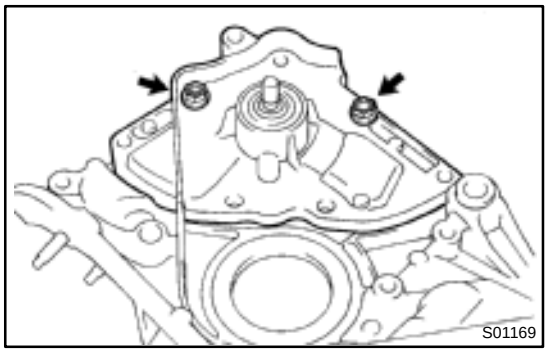

2. REMOVE DRIVE AND DRIVEN ROTORS

Remove the 2 bolts, pump body cover, O–ring, the drive and driven rotors.

LU03M–03

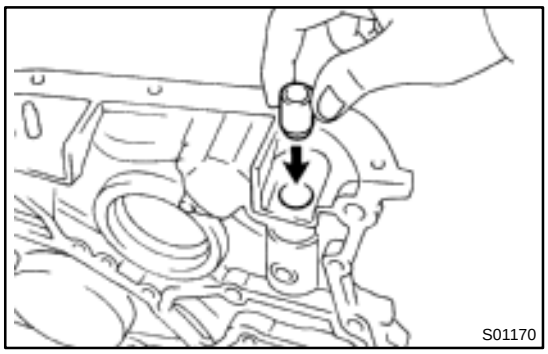

INSPECTION

1. INSPECT RELIEF VALVE

Coat the valve with engine oil and check that it falls smoothly into the valve hole by its own weight.

If it doesn't, replace the relief valve. If necessary, replace the oil pump assembly.

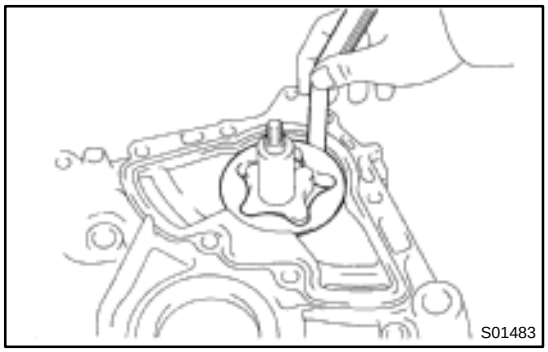

2. INSPECT DRIVE AND DRIVEN ROTORS

(a) Inspect the rotors for body clearance.

Using a feeler gauge, measure the clearance between the driven rotor and body.

Standard body clearance:
0.10 – 0.16 mm (0.0039 – 0.0063 in.)
Maximum body clearance: 0.20 mm (0.0079 in.)

If the body clearance is greater than maximum, replace the rotors as a set. If necessary, replace the oil pump assembly.

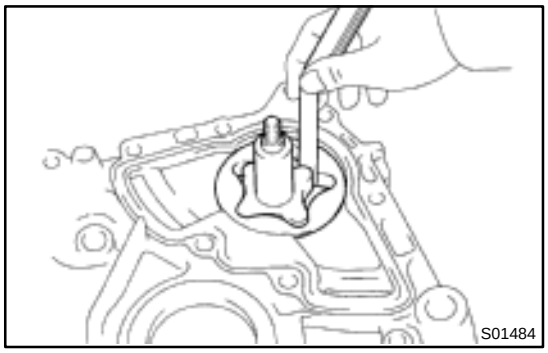

(b) Inspect the rotors for tip clearance.

Using a feeler gauge, measure the clearance between the drive and driven rotor tips.

Standard tip clearance:
0.04 – 0.16 mm (0.0016 – 0.0063 in.)
Maximum tip clearance: 0.20 mm (0.0079 in.)

If the tip clearance is greater than maximum, replace the rotors as a set.

LU03N–03

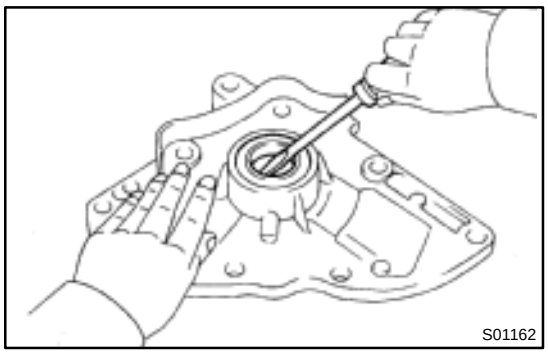

REPLACEMENT

1. REPLACE OIL PUMP OIL SEAL

(a) Using a screwdriver, pry out the oil seal.

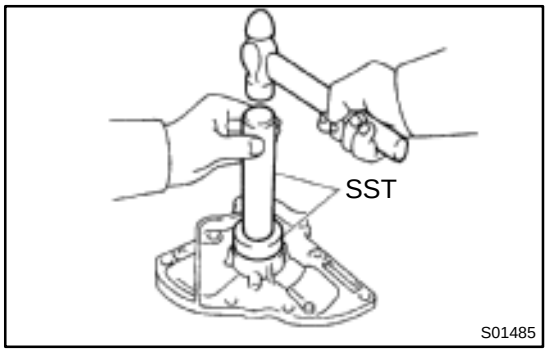

(b) Using SST and a hammer, tap in a new oil seal until its surface is flush with the oil pump cover edge.

SST 09950–60010 (09951–00350),
09950–70010 (09951–07100)

(c) Apply MP grease to the oil seal lip.

2. REPLACE CRANKSHAFT FRONT OIL SEAL
(See page EM–104)

LU0FP–01

REASSEMBLY

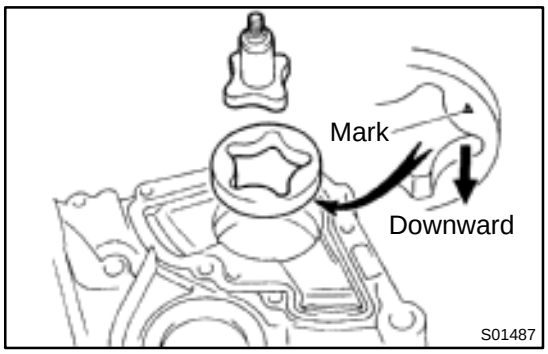

1. INSTALL DRIVE AND DRIVEN ROTORS

(a) Place the drive and driven rotors into pump body with the mark on the driven rotor facing the pump body side.

(b) Install a new O–ring to the oil pump body.

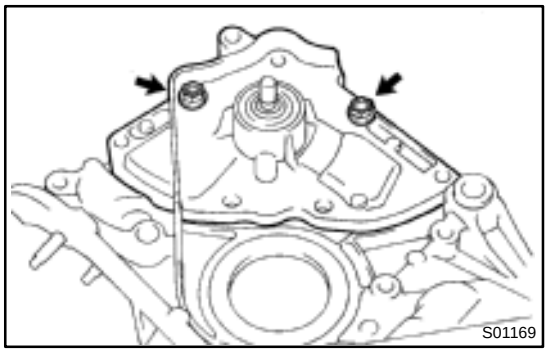

(c) Install the oil pump body cover with the 2 bolts.
Torque: 8.8 N·m (90 kgf·cm, 78 in.·lbf)

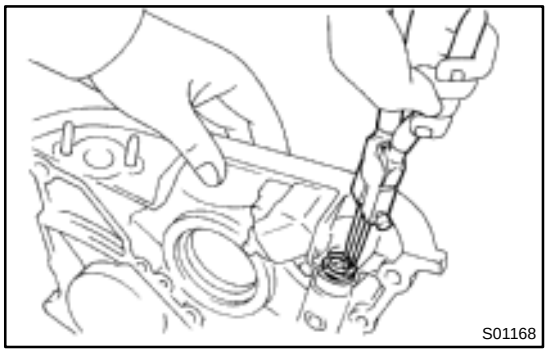

2. INSTALL RELIEF VALVE

(a) Insert the relief valve, spring and retainer into the oil pump body hole.

(b) Using snap ring pliers, install the snap ring.

LU03P–03

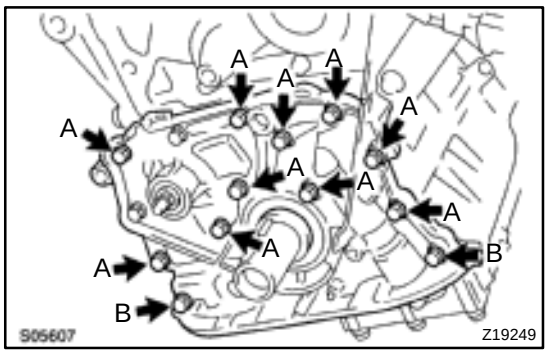

INSTALLATION

1. INSTALL OIL PUMP

Install a new gasket and the oil pump with the 12 bolts. Uniformity tighten the bolts in several passes.

Torque: 8.8 N·m (90 kgf·cm, 78 in.·lbf)

HINT:

Each bolt length is indicated in the illustration.

Bolt length:

25 mm (0.98 in.) for A

35 mm (1.38 in.) for B

2. INSTALL OIL PUMP PULLEY (See page EM–23)

3. INSTALL CRANKSHAFT TIMING PULLEY (See page EM–23)

4. INSTALL NO.2 IDLER PULLEY (See page EM–23)

5. INSTALL TIMING BELT (See page EM–23)

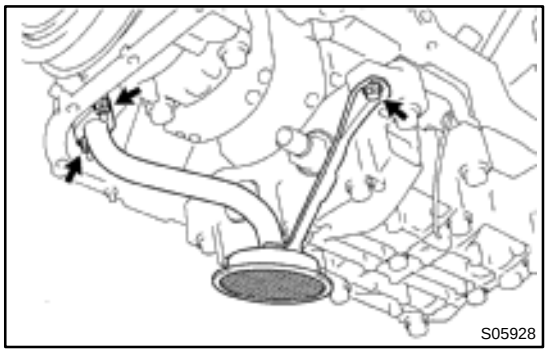

6. INSTALL OIL STRAINER

Install a new gasket and the oil strainer with the bolt and 2 nuts.

Torque: 5.4 N·m (55 kgf·cm, 48 in.·lbf)

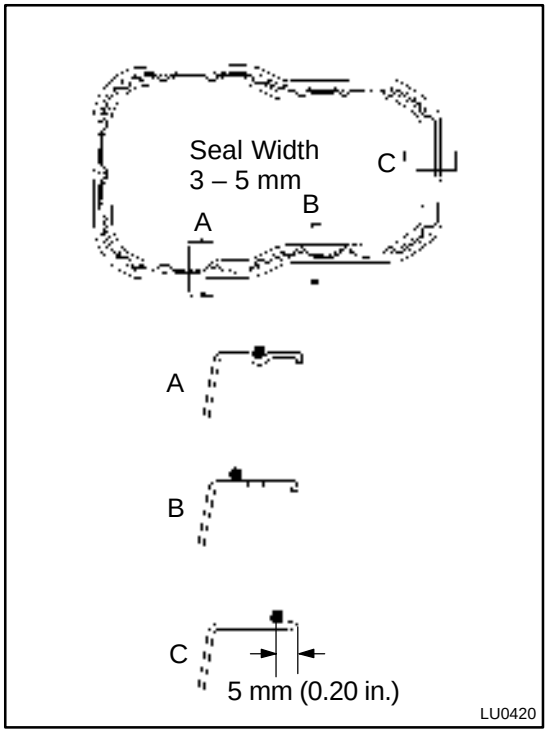

7. INSTALL OIL PAN

(a) Remove any old seal packing (FIPG) material and be careful not to drop any oil on the contact surfaces of the oil pan and cylinder block.

★ Using a razor blade and gasket scraper, remove all the old packing (FIPG) material from the gasket surfaces and sealing groove.

★ Thoroughly clean all components to remove all the loose material.

★ Using a non–residue solvent, clean both sealing surface.

NOTICE:

Do not use a solvent which will affect the painted surfaces.

(b) Apply seal packing to the oil pan shown in the illustration.

Seal packing: Part No. 08826–00080 or equivalent

★ Install a nozzle that has been cut to a 3 – 5 mm (0.12 – 0.20 in.) opening.

★ Parts must be assembled within 5 minutes of application. Otherwise the material must be removed and reapplied.

★ Immediately remove nozzle from the tube and reinstall the cap.

(c) Install the oil pan with the 17 bolts and 2 nuts. Uniformly tighten the bolts and nuts in several passes.

(d) Install the dipstick.

8. INSTALL NO.2 REAR END PLATE, OIL PAN INSULATOR AND EXHAUST PIPE BRACKET
(See page EM–75)

9. INSTALL LH STIFFENER PLATE AND NO.2 EXHAUST MANIFOLD STAY (See page EM–23)

10. INSTALL FRONT EXHAUST PIPE
(See page EM–75)

11. FILL WITH ENGINE OIL

12. START ENGINE AND CHECK FOR OIL LEAKS

13. RECHECK ENGINE OIL LEVEL

OIL COOLER

COMPONENTS

LU03Q–03

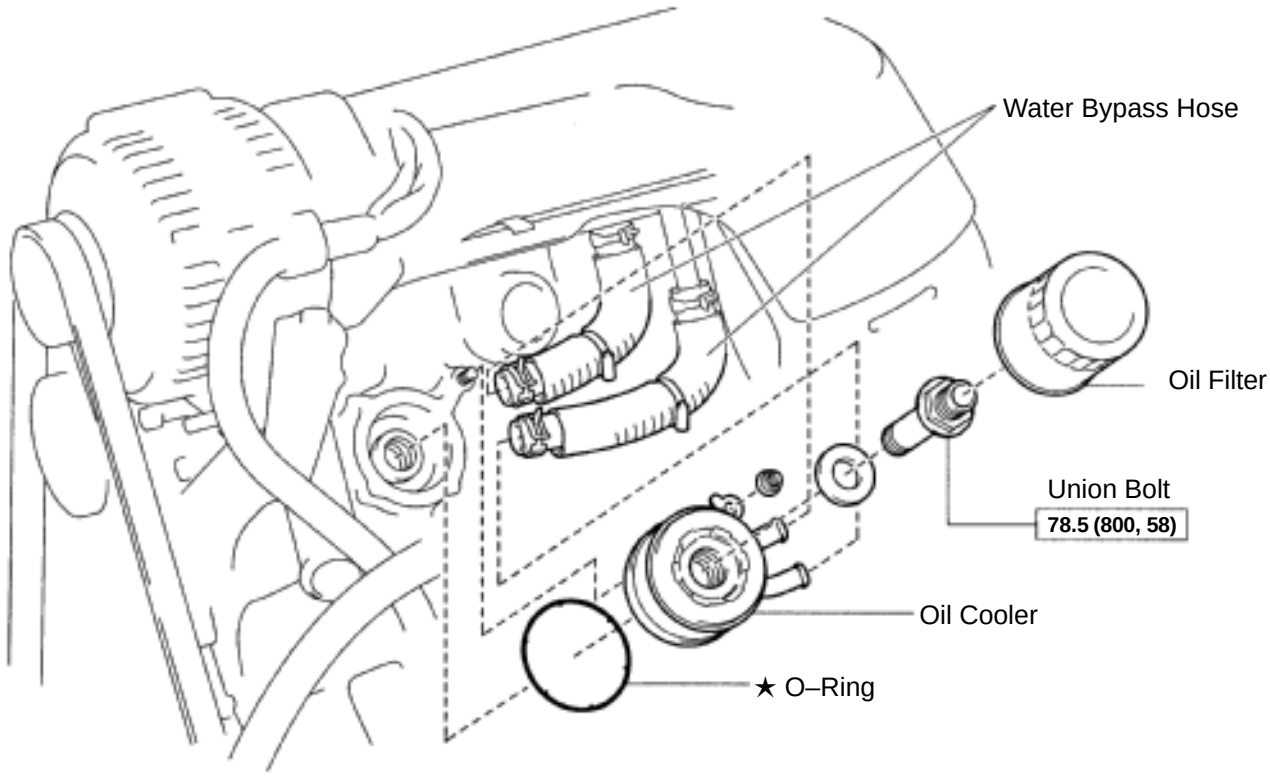

N·m (kgf·cm, ft·lbf) : Specified torque
★ Non–reusable part

S05996

LU03R–03

REMOVAL

1. DRAIN ENGINE COOLANT

2. REMOVE OIL FILTER (See page LU–2)

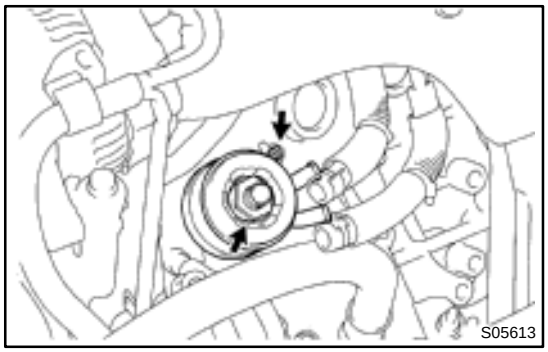

3. REMOVE OIL COOLER

(a) Disconnect the 2 water bypass hoses from the oil cooler.
(b) Remove the union bolt and plate washer.
(c) Remove the nut and oil cooler.
(d) Remove the O–ring from the oil cooler.

LU03S–03

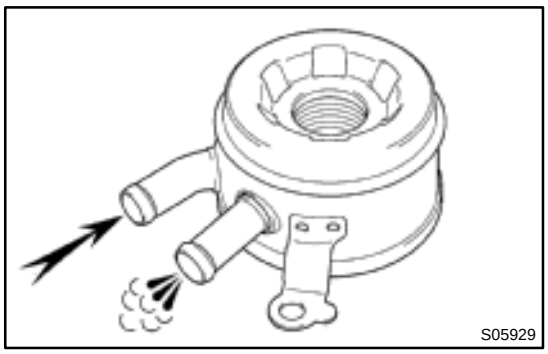

INSPECTION

INSPECT OIL COOLER

Check the oil cooler for damage or clogging.
If necessary, replace the oil cooler.

LU03T–03

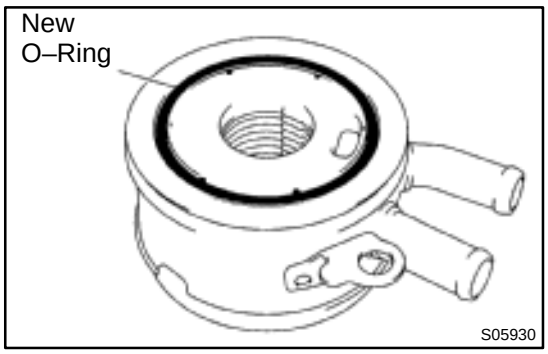

INSTALLATION

1. INSTALL OIL COOLER

(a) Clean the oil cooler contact surface on the oil cooler mounting.

(b) Install a new O–ring to the oil cooler.

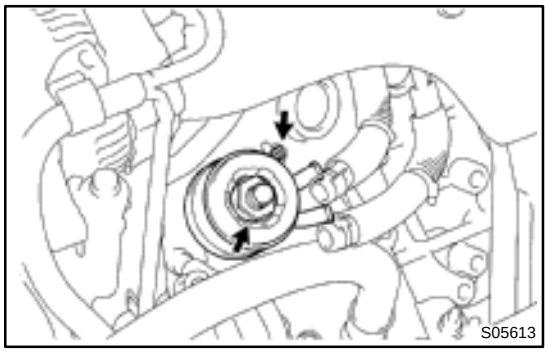

(c) Temporarily install the oil cooler with the nut.

(d) Apply a light coat of engine oil on the threads and under the head of the union bolt.

(e) Install the plate washer and union bolt.
Torque: 78.5 N·m (800 kgf·cm, 58 ft·lbf)

(f) Tighten the nut.
Torque: 9.0 N·m (92 kgf·cm, 80 in.·lbf)

(g) Connect the 2 water bypass hoses to the oil cooler.

2. INSTALL OIL FILTER (See page LU–2)

3. FILL WITH ENGINE COOLANT

4. START ENGINE AND CHECK FOR LEAKS

5. CHECK ENGINE OIL LEVEL

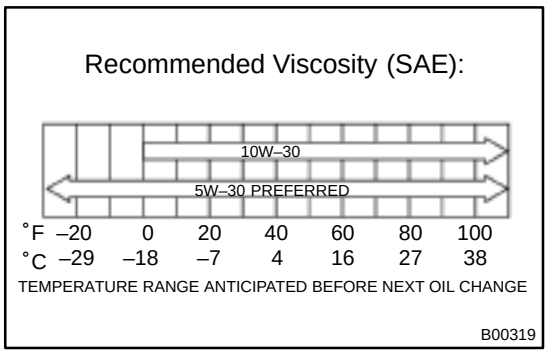

OIL AND FILTER

INSPECTION

LU0FR–01

1. CHECK ENGINE OIL QUALITY

Check the oil for deterioration, entry of water, discoloring or thinning.

If the quality is visibly poor, replace the oil.

Oil grade:

API grade SJ, Energy–Conserving or ILSAC multigrade engine oil.

SAE 5W – 30 is the best choice for your vehicle, for good fuel economy, and good starting in cold weather.

2. CHECK ENGINE OIL LEVEL

After warm up the engine and then 5 minutes after the engine stop, oil level should be between the low level and full level marks on the dipstick.

If low, check for leakage and add oil up to the full level mark.

NOTICE:

Do not fill with engine oil above the full level mark.

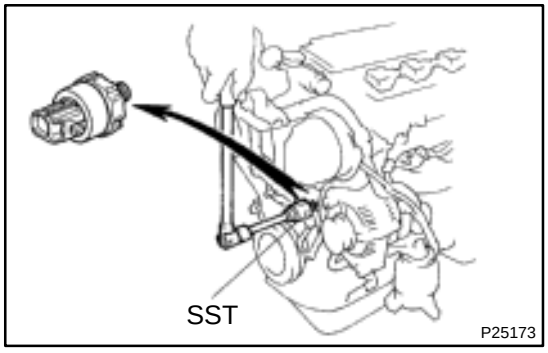

3. REMOVE OIL PRESSURE SWITCH, AND INSTALL OIL PRESSURE GAUGE

(a) Using SST, remove the oil pressure switch.
SST 09816–30010

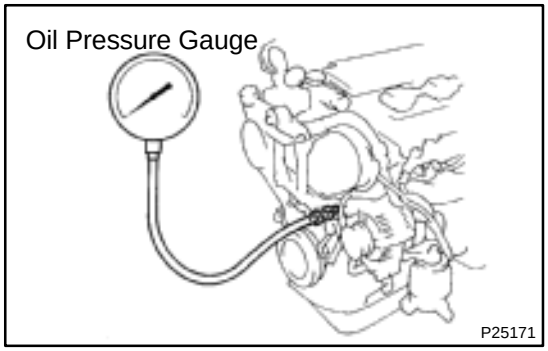

(b) Install the oil pressure gauge.

4. WARM UP ENGINE

Allow the engine to warm up to normal operating temperature.

5. CHECK OIL PRESSURE

Oil pressure:

At idle	29 kPa (0.3 kgf/cm^2, 4.3 psi) or more
At 3,000 rpm	294 – 539 kPa (3.0 – 5.5 kgf/cm^2, 43 – 78 psi)

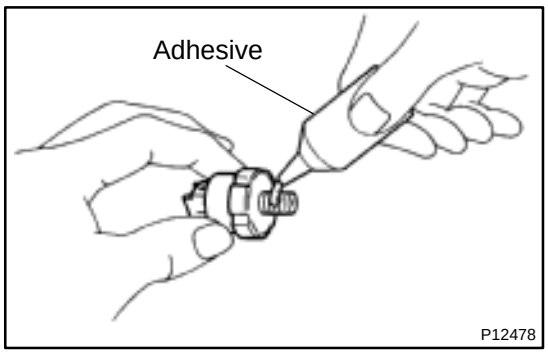

6. REMOVE OIL PRESSURE GAUGE AND REINSTALL OIL PRESSURE SWITCH

(a) Remove the oil pressure gauge.

(b) Apply adhesive to 2 or 3 threads of the oil pressure switch.
Adhesive: Part No. 08833–00080, THREE BOND 1344, LOCTITE 242 or equivalent

(c) Using SST, install the oil pressure switch.
SST 09816–30010
Torque: 13 N·m (130 kgf·cm, 9 ft·lbf)

7. START ENGINE AND CHECK FOR LEAKS

LU026–03

REPLACEMENT

CAUTION:

- ★ **Prolonged and repeated contact with mineral oil will result in the removal of natural fats from the skin, leading to dryness, irritation and dermatitis. In addition, used engine oil contains potentially harmful contaminants which may cause skin cancer.**
- ★ **Exercise caution in order to minimize the length and frequency of contact of your skin to used oil. Wear protective clothing and gloves. Wash your skin thoroughly with soap and water, or use water–less hand cleaner, to remove any used engine oil. Do not use gasoline, thinners, or solvents.**
- ★ **In order to preserve the environment, used oil and used oil filter must be disposed of only at designated disposal sites.**

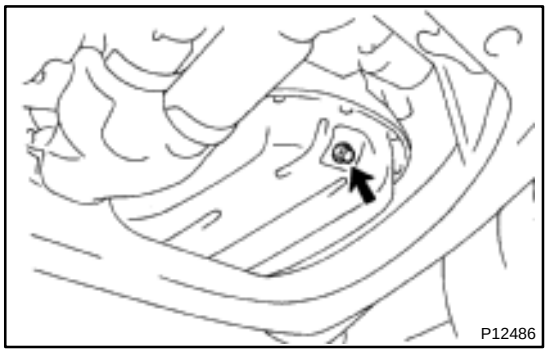

1. DRAIN ENGINE OIL

(a) Remove the oil filler cap.

(b) Remove the oil drain plug, and drain the oil into a container.

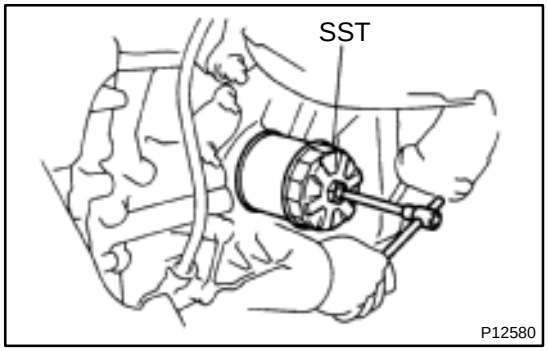

2. REPLACE OIL FILTER

(a) Using SST, remove the oil filter.
SST 09228–07501

(b) Check and clean the oil filter installation surface.

(c) Apply clean engine oil to the gasket of a new oil filter.

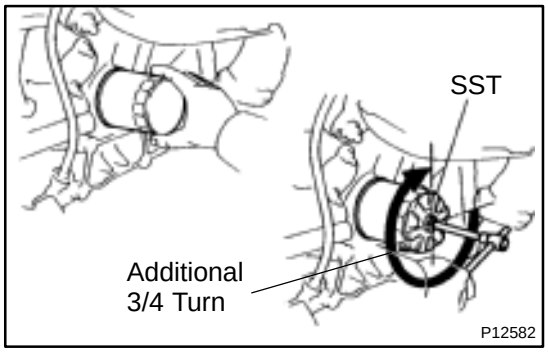

(d) Lightly screw the oil filter into place, and tighten it until the gasket contacts the seat.

(e) Using SST, tighten it an additional 3/4 turn.
SST 09228–07501

3. REFILL WITH ENGINE OIL

(a) Clean and install the oil drain plug with a new gasket.
Torque: 45 N·m (460 kgf·cm, 33 ft·lbf)

(b) Fill with fresh engine oil.
Capacity:

Drain and refill	w/ Oilfilter change	4.7 liters (5.0 US qts, 4.1 lmp. qts)
	w/o Oilfilter change	4.5 liters (4.8 US qts, 4.0 lmp. qts)
Dry fill		5.2 liters (5.5 US qts, 4.6 lmp. qts)

(c) Install the oil filler cap.

4. START ENGINE AND CHECK FOR OIL LEAKS

5. RECHECK ENGINE OIL LEVEL

OIL PUMP

COMPONENTS

LU027–04

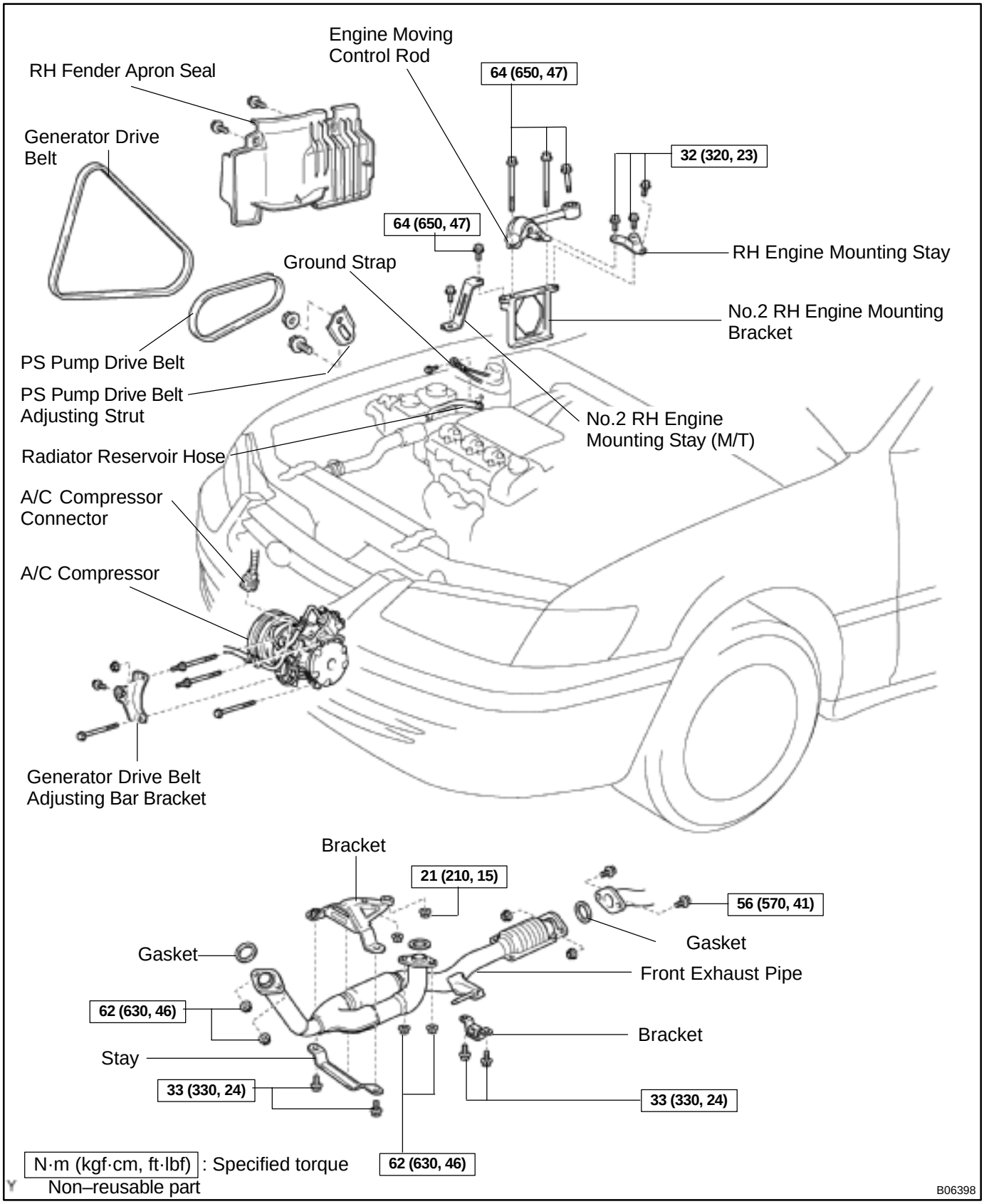

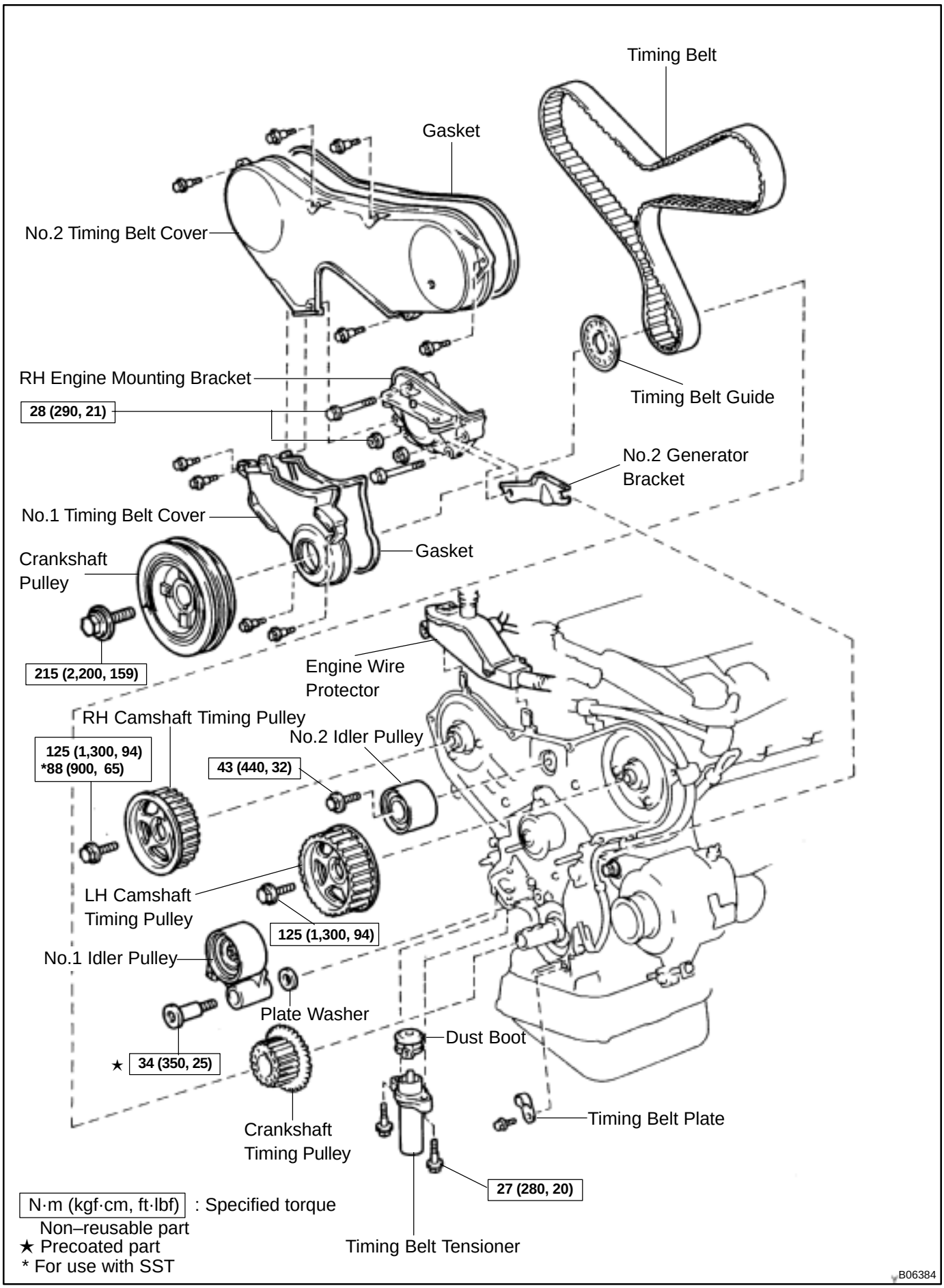
Timing Belt
Gasket
No.2 Timing Belt Cover
RH Engine Mounting Bracket
28 (290, 21)
Timing Belt Guide
No.2 Generator Bracket
No.1 Timing Belt Cover
Gasket
Crankshaft Pulley
215 (2,200, 159)
Engine Wire Protector
RH Camshaft Timing Pulley
125 (1,300, 94)
*88 (900, 65)
No.2 Idler Pulley
43 (440, 32)
LH Camshaft Timing Pulley
125 (1,300, 94)
No.1 Idler Pulley
Plate Washer
★ 34 (350, 25)
Dust Boot
Timing Belt Plate
Crankshaft Timing Pulley
27 (280, 20)
Timing Belt Tensioner
N·m (kgf·cm, ft·lbf) : Specified torque
Non–reusable part
★ Precoated part
* For use with SST
B06384

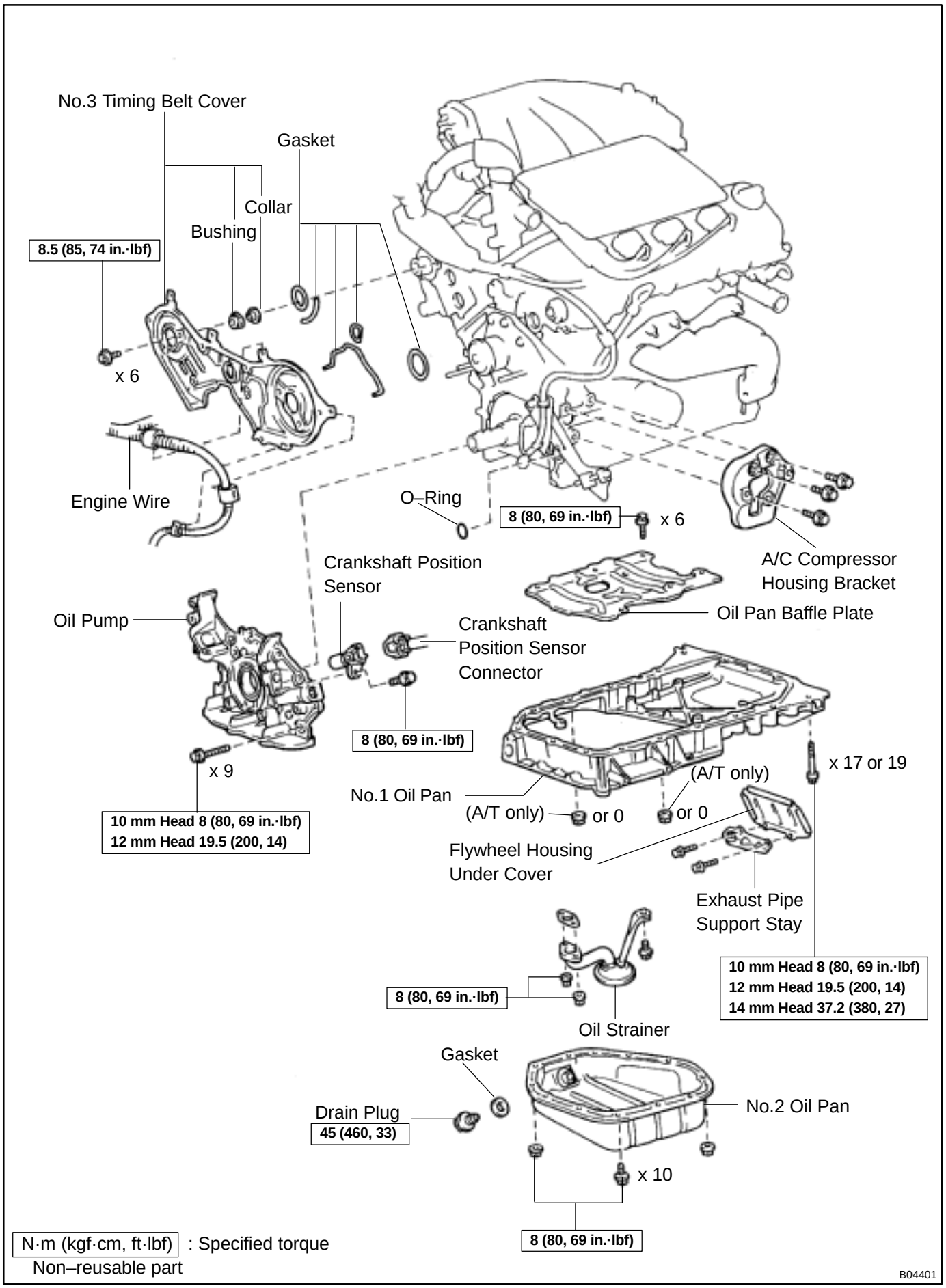
No.3 Timing Belt Cover
Gasket
Collar
Bushing
8.5 (85, 74 in.·lbf)
x 6
Engine Wire
O–Ring
8 (80, 69 in.·lbf)
x 6
A/C Compressor Housing Bracket
Crankshaft Position Sensor
Oil Pump
Oil Pan Baffle Plate
Crankshaft Position Sensor Connector
8 (80, 69 in.·lbf)
x 9
10 mm Head 8 (80, 69 in.·lbf)
12 mm Head 19.5 (200, 14)
No.1 Oil Pan
(A/T only)
or 0
(A/T only)
or 0
x 17 or 19
Flywheel Housing Under Cover
Exhaust Pipe Support Stay
10 mm Head 8 (80, 69 in.·lbf)
12 mm Head 19.5 (200, 14)
14 mm Head 37.2 (380, 27)
8 (80, 69 in.·lbf)
Oil Strainer
Gasket
Drain Plug
45 (460, 33)
No.2 Oil Pan
x 10
8 (80, 69 in.·lbf)
N·m (kgf·cm, ft·lbf) : Specified torque
Non–reusable part
B04401

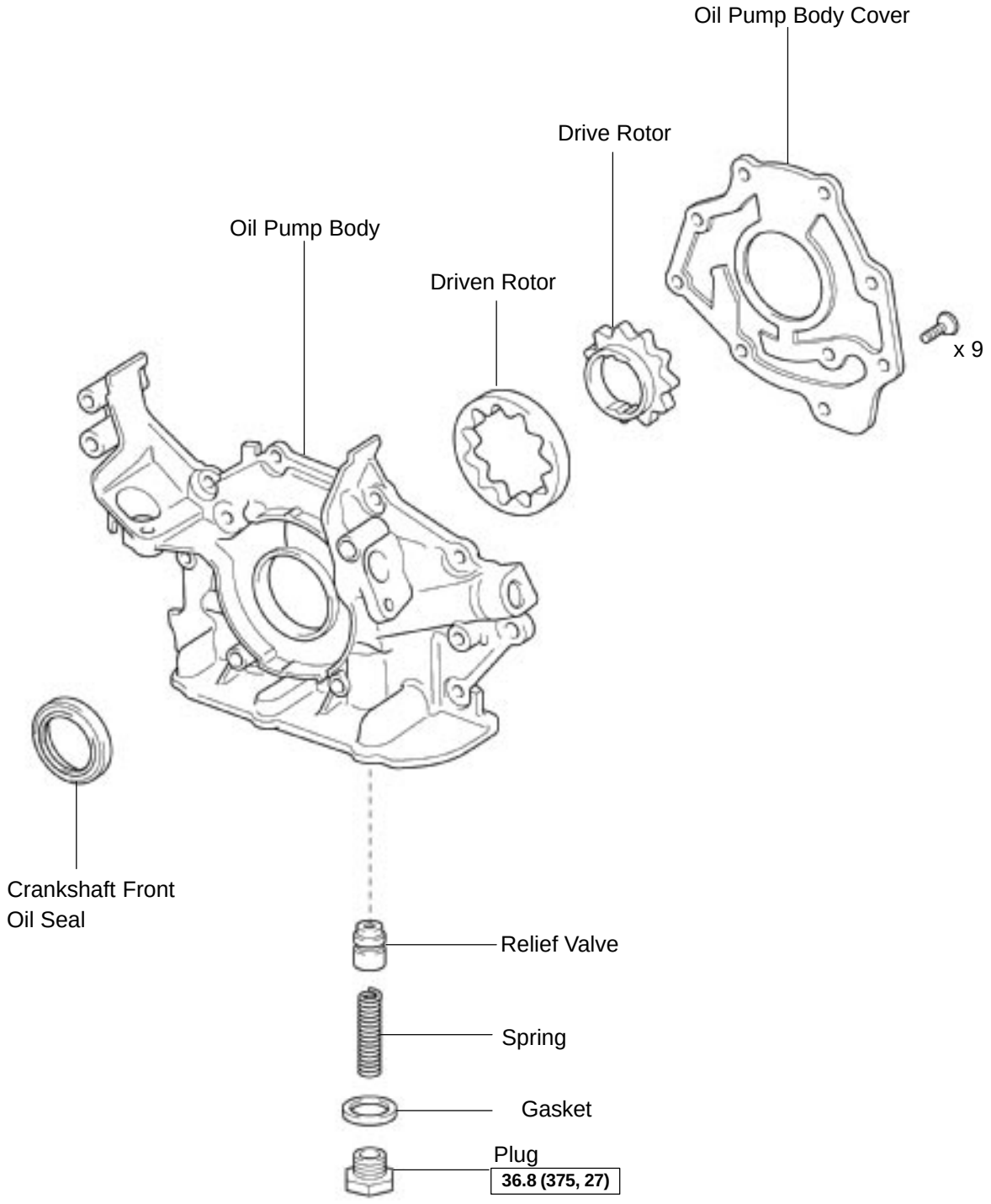

N·m (kgf·cm, ft·lbf) : Specified torque
Non–reusable part

B01016

LU028–03

REMOVAL

HINT:

When repairing the oil pump, the oil pan and strainer should be removed and cleaned.

1. **REMOVE RH FRONT WHEEL**
2. **REMOVE RH FENDER APRON SEAL**
3. **DRAIN ENGINE OIL**
4. **REMOVE FRONT EXHAUST PIPE (See page EM–32)**
5. **REMOVE FRONT EXHAUST PIPE BRACKET FROM NO.1 OIL PAN**
6. **REMOVE GENERATOR DRIVE BELT (See page CH–6)**
7. **DISCONNECT A/C COMPRESSOR FROM ENGINE (See page AC–41)**

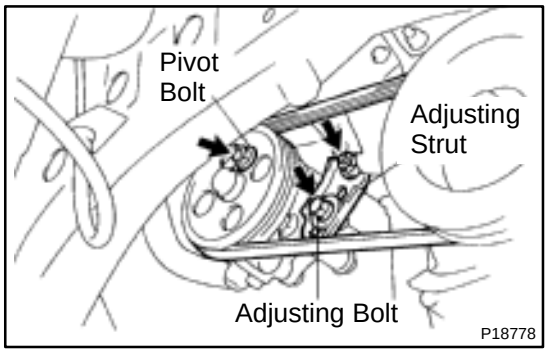

8. **REMOVE PS PUMP DRIVE BELT AND ADJUSTING STRUT**

(a) Loosen the pivot and adjusting bolts, and remove the drive belt.

(b) Remove the bolt, nut and adjusting strut.

9. **REMOVE TIMING BELT (See page EM–15)**
10. **REMOVE TIMING PULLEYS (See page EM–15)**
11. **REMOVE NO.3 TIMING BELT COVER (See page EM–32)**

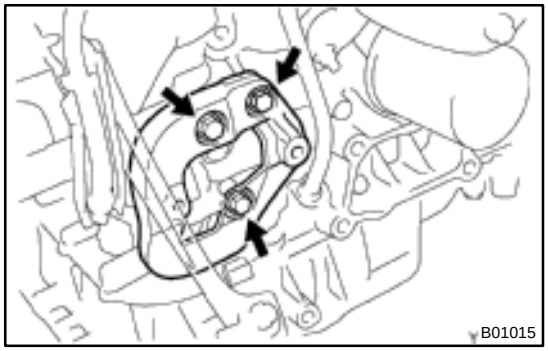

12. **REMOVE A/C COMPRESSOR HOUSING BRACKET**

Remove the 3 bolts and housing bracket.

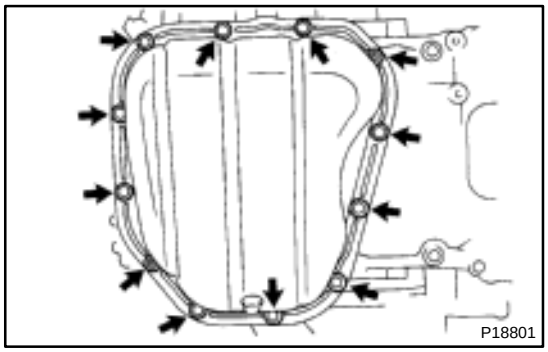

13. **REMOVE NO.2 OIL PAN**

(a) Remove the 10 bolts and 2 nuts.

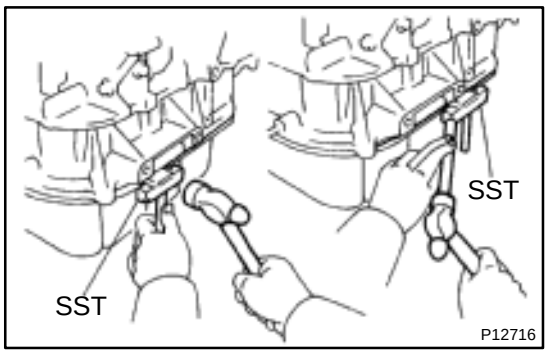

(b) Insert the blade of SST between the No.1 and No.2 oil pans, and cut off applied sealer and remove the No.1 oil pan.
SST 09032–00100

NOTICE:

★ **Be careful not to the damage the No.2 oil pan contact surface of the No.1 oil pan.**

★ **Be careful not to damage the No.2 oil pan flange.**

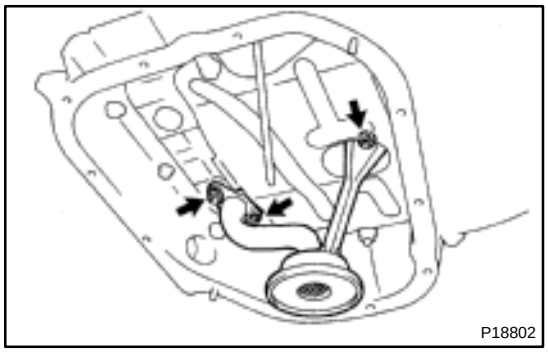

14. REMOVE OIL STRAINER

Remove the bolt, 2 nuts, oil strainer and gasket.

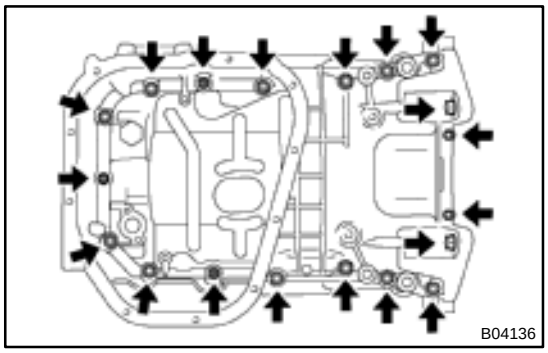

15. REMOVE NO.1 OIL PAN

(a) Remove the 2 bolts, exhaust pipe support stay and flywheel housing under cover.

(b) Remove the 19 bolts (or 17 bolts and 2 nuts).

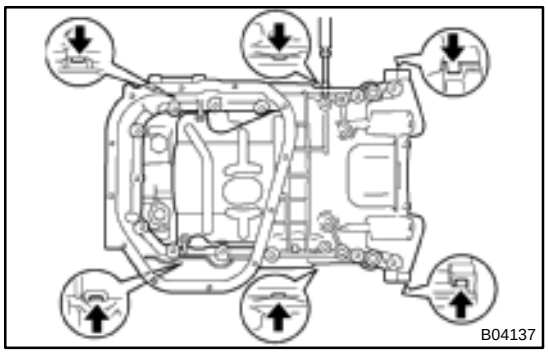

(c) Using a screwdriver, remove the oil pan by prying the portions between the cylinder block and oil pan.

NOTICE:

Be careful not to damage the contact surfaces of the cylinder block and oil pan.

16. REMOVE BAFFLE PLATE FROM NO.1 OIL PAN

17. REMOVE CRANKSHAFT POSITION SENSOR

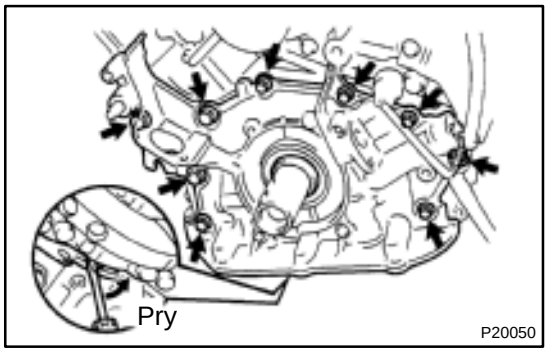

18. REMOVE OIL PUMP

(a) Remove the 9 bolts.

(b) Remove the oil pump by prying a screwdriver between the oil pump and main bearing cap.

(c) Remove the O–ring.

LU029–03

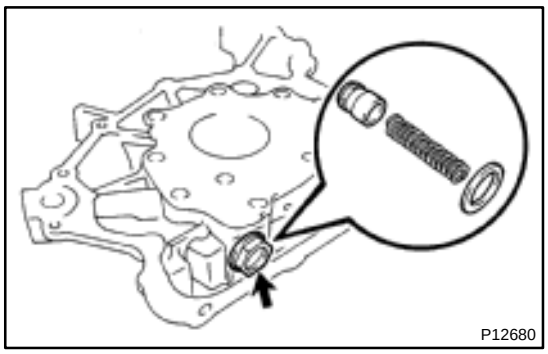

DISASSEMBLY

1. REMOVE RELIEF VALVE

Remove the plug, gasket, spring and relief valve.

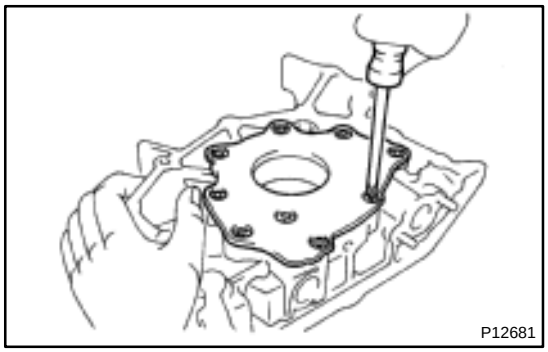

2. REMOVE DRIVE AND DRIVEN ROTORS

Remove the 9 screws, pump body cover, drive and driven rotors.

LU02A–03

INSPECTION

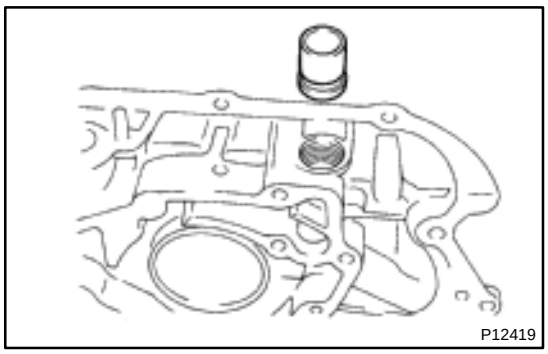
P12419

1. INSPECT RELIEF VALVE

Coat the valve with engine oil and check that it falls smoothly into the valve hole by its own weight.

If it does not, replace the relief valve. If necessary, replace the oil pump assembly.

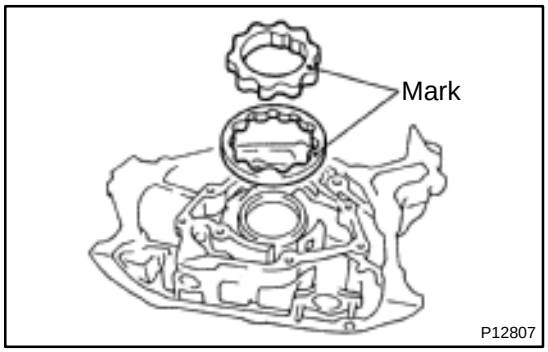

P12807

2. PLACE DRIVE AND DRIVEN ROTORS INTO OIL PUMP BODY

Place the drive and driven rotors into the oil pump body with the mark facing upward.

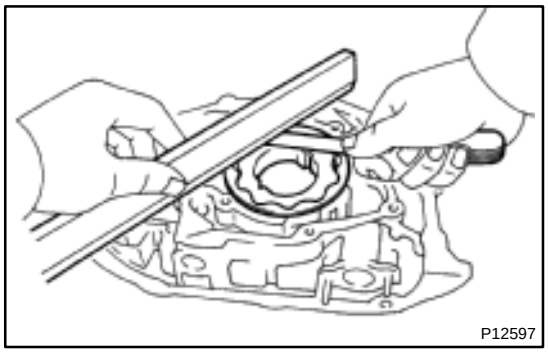
P12597

3. INSPECT ROTOR SIDE CLEARANCE

Using a feeler gauge and precision straight edge, measure the clearance between the rotors and precision straight edge.

Standard side clearance:
0.030 – 0.090 mm (0.0012 – 0.0035 in.)
Maximum side clearance: 0.15 mm (0.0059 in.)

If the side clearance is greater than maximum, replace the rotors as a set. If necessary, replace the oil pump assembly.

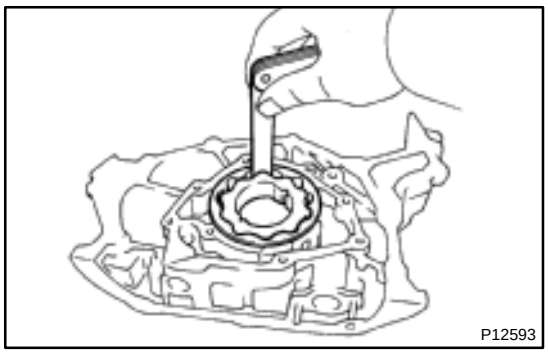
P12593

4. INSPECT ROTOR TIP CLEARANCE

Using a feeler gauge, measure the clearance between the drive and driven rotor tips.

Standard tip clearance:
0.110 – 0.240 mm (0.0043 – 0.0094 in.)
Maximum tip clearance: 0.35 mm (0.0138 in.)

If the tip clearance is greater than maximum, replace the rotors as a set.

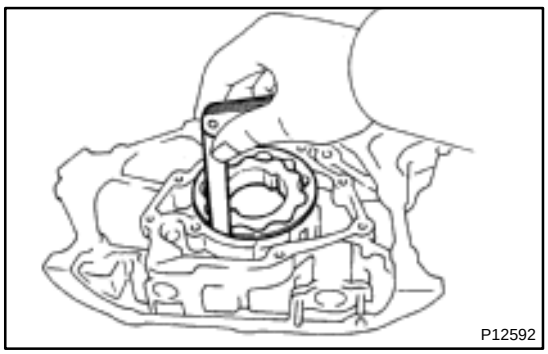
P12592

5. INSPECT ROTOR BODY CLEARANCE

Using a feeler gauge, measure the clearance between the driven rotor and body.

Standard body clearance:
0.100 – 0.175 mm (0.0039 – 0.0069 in.)
Maximum body clearance: 0.30 mm (0.0118 in.)

If the body clearance is greater than maximum, replace the rotors as a set. If necessary, replace the oil pump assembly.

LU02B–03

REPLACEMENT

REPLACE CRANKSHAFT FRONT OIL SEAL

HINT:

There are 2 methods ((a) and (b)) to replace the oil seal which are as follows:

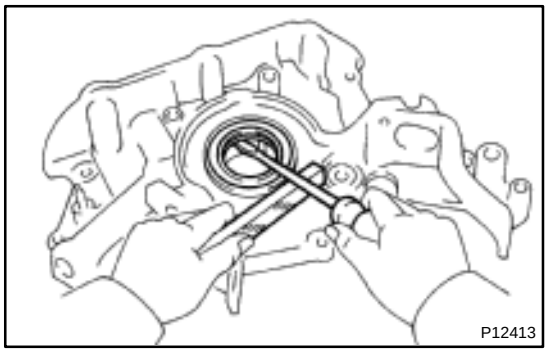

(a) If the oil pump is removed from the cylinder block.

(1) Using a screwdriver, pry out the oil seal.

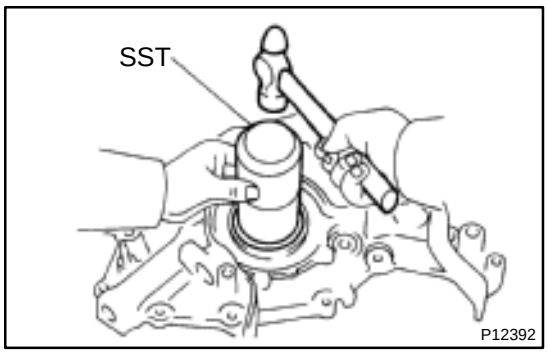

(2) Using SST and a hammer, tap in a new oil seal until its surface is flush with the oil pump body edge.

SST 09223–00010

(3) Apply MP grease to the oil seal lip.

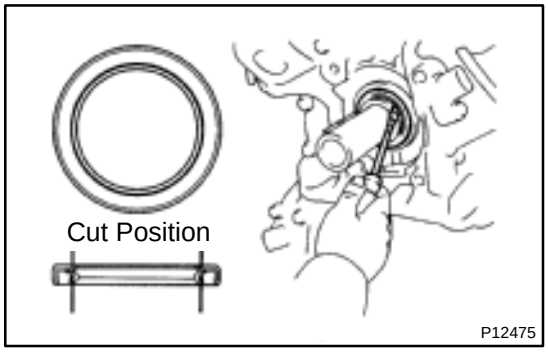

(b) If the oil pump is installed to the cylinder block.

(1) Using a knife, cut off the oil seal lip.

(2) Using a screwdriver, pry out the oil seal.

NOTICE:

Be careful not to damage the crankshaft. Tape the screwdriver tip.

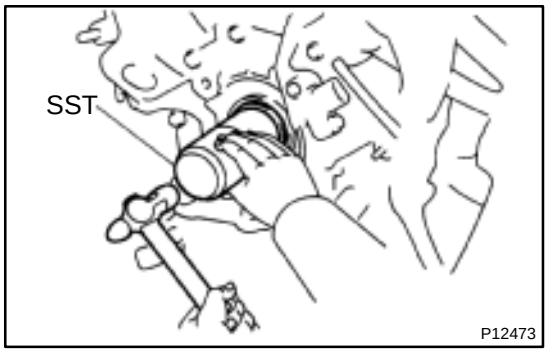

(3) Apply MP grease to a new oil seal lip.

(4) Using SST and a hammer, tap in the oil seal until its surface is flush with the oil pump body edge.

SST 09223–00010

LU02C–03

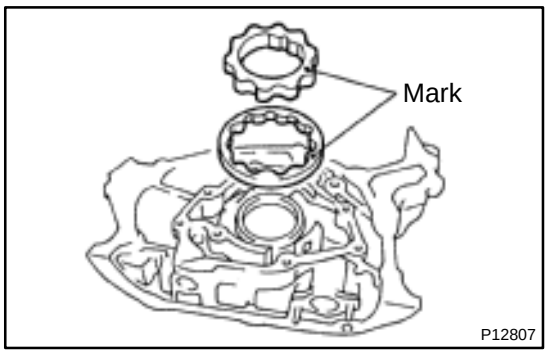

REASSEMBLY

1. INSTALL DRIVE AND DRIVEN ROTORS

(a) Place the drive and driven rotors into pump body with the marks facing the pump body cover side.

(b) Install the pump body cover with the 9 screws.

2. INSTALL RELIEF VALVE

Insert the relief valve and spring into the pump body hole, and install the plug with a new gasket.

Torque: 36.8 N·m (375 kgf·cm, 37 ft·lbf)

LU02D–03

INSTALLATION

1. INSTALL OIL PUMP

(a) Remove any old packing (FIPG) material and be careful not to drop any oil on the contact surfaces of the oil pump and cylinder block.

★ Using a razor blade and gasket scraper, remove all the old packing (FIPG) material from the gasket surfaces and sealing grooves.

★ Thoroughly clean all components to remove all the loose material.

★ Using a non–residue solvent, clean both sealing surfaces.

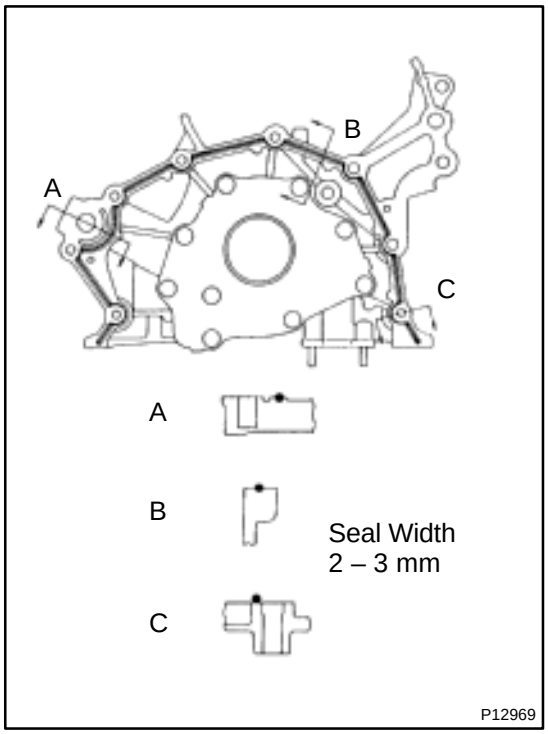

(b) Apply seal packing to the oil pump as shown in the illustration.

Seal packing: Part No. 08826–00080 or equivalent

★ Install a nozzle that has been cut to a 2 – 3 mm (0.08 – 0.12 in.) opening.

HINT:

Avoid applying an excessive amount to the surface.

★ Parts must be assembled within 3 minutes of application. Otherwise the material must be removed and reapplied.

★ Immediately remove nozzle from the tube and reinstall cap.

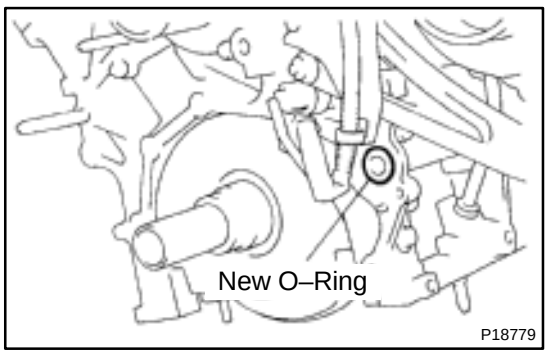

(c) Place a new O–ring on the cylinder block.

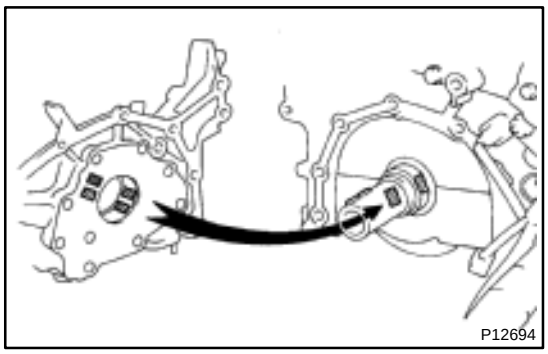

(d) Engage the spline teeth of the oil pump drive gear with the large teeth of the crankshaft, and slide the oil pump on the crankshaft.

(e) Install the oil pump with the 9 bolts. Uniformly tighten the bolts in several passes.

Torque:
10 mm head: 8 N·m (80 kgf·cm, 69 in.·lbf)
12 mm head: 19.5 N·m (200 kgf·cm, 14 ft·lbf)

2. INSTALL CRANKSHAFT POSITION SENSOR

3. INSTALL BAFFLE PLATE TO NO.1 OIL PAN

Torque: 8 N·m (80 kgf·cm, 69 in.·lbf)

4. INSTALL NO.1 OIL PAN

(a) Remove any old packing (FIPG) material and be careful not to drop any oil on the contact surfaces of the oil pan, oil pump and cylinder block.

★ Using a razor blade and gasket scraper, remove all the old packing (FIPG) material from the gasket surfaces and sealing grooves.

★ Thoroughly clean all components to remove all the loose material.

★ Using a non–residue solvent, clean both sealing surfaces.

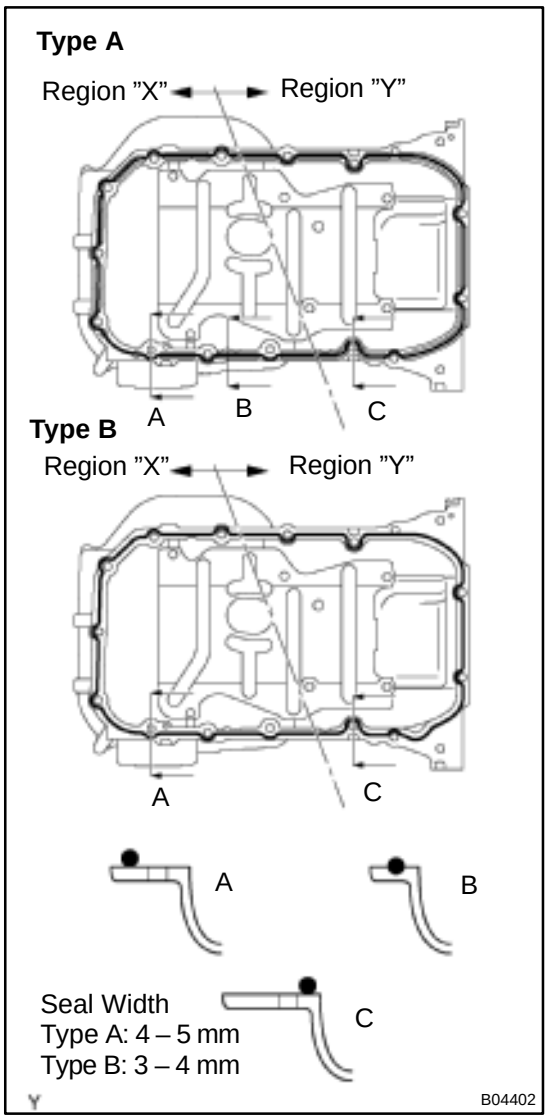

(b) Apply seal packing to the oil pan as shown in the illustration.

Seal packing: Part No. 08826–00080 or equivalent
Region "X" is at the outer side of the bolt hole.
Region "Y" is at the inner side of the bolt hole.

★ Install a nozzle that has been cut to a 4 – 5 mm (0.16 – 0.20 in.) (Type A) or 3 – 4 mm (0.12 – 0.16 in.) (Type B) opening.

HINT:

Avoid applying an excessive amount to the surface.

★ Parts must be assembled within 3 minutes of application. Otherwise the material must be removed and reapplied.

★ Immediately remove nozzle from the tube and reinstall cap.

(c) Install the oil pan with the 19 bolts (or 17 bolts and 2 nuts). Uniformly tighten the bolts and nuts in several passes.

Torque:
10 mm head: 8 N·m (80 kgf·cm, 69 in.·lbf)
12 mm head: 19.5 N·m (200 kgf·cm, 14 ft·lbf)
14 mm head: 37.2 N·m (380 kgf·cm, 27 ft·lbf)

(d) Install the flywheel housing under cover and exhaust pipe support stay with the 2 bolts.

Torque: 7.8 N·m (80 kgf·cm, 69 in.·lbf)

5. INSTALL OIL STRAINER

Install a new gasket and the oil strainer with the bolt and 2 nuts.

Torque: 8 N·m (80 kgf·cm, 69 in.·lbf)

6. INSTALL NO.2 OIL PAN

(a) Remove any old packing (FIPG) material and be careful not to drop any oil on the contact surface of the No.1 and No.2 oil pans.

★ Using a razor blade and gasket scraper, remove all the old packing (FIPG) material from the gasket surfaces and sealing grooves.

★ Thoroughly clean all components to remove all the loose material.

★ Using a non–residue solvent, clean both sealing surfaces.

NOTICE:
Do not use a solvent which will affect the painted surfaces.

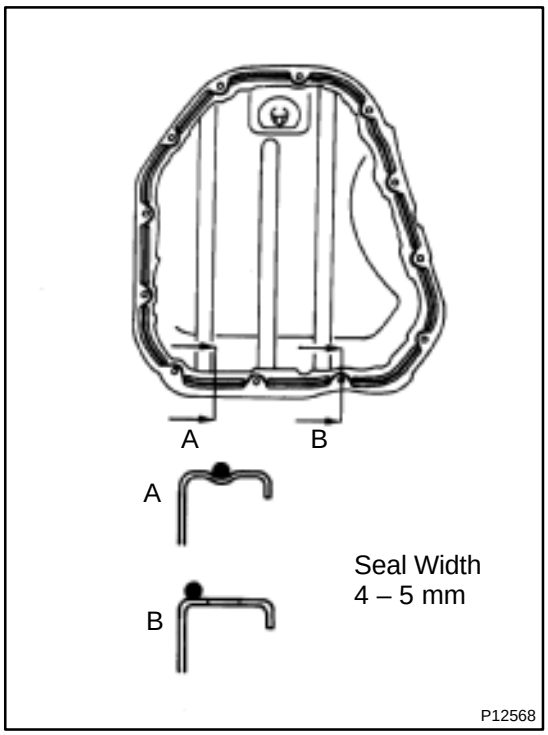

(b) Apply seal packing to the No.2 oil pan as shown in the illustration.
Seal packing:
Part No. 08826–00080 or equivalent
★ Install a nozzle that has been cut to a 4 – 5 mm (0.16 – 0.20 in.) opening.

HINT:
Avoid applying an excessive amount to the surface.
★ Parts must be assembled within 3 minutes of application. Otherwise the material must be removed and reapplied.
★ Immediately remove nozzle from the tube and reinstall cap.

(c) Install the No.2 oil pan with the 10 bolts and 2 nuts. Uniformly tighten the bolts and nuts in several passes.
Torque: 8 N·m (80 kgf·cm, 69 in.·lbf)

7. INSTALL A/C COMPRESSOR HOUSING BRACKET
Torque: 25 N·m (250 kgf·cm, 18 ft·lbf)
8. INSTALL NO.3 TIMING BELT COVER
(See page EM–21)
9. INSTALL TIMING PULLEYS (See page EM–21)
10. INSTALL TIMING BELT (See page EM–21)
11. INSTALL ADJUSTING STRUT AND PS PUMP DRIVE BELT
(a) Temporarily install the adjusting strut with the bolt and the nut.
(b) Install the drive belt with the pivot and adjusting bolts.
Torque: 43.1 N·m (440 kgf·cm, 32 ft·lbf)
(c) Tighten the nut.
Torque: 43.1 N·m (440 kgf·cm, 32 ft·lbf)
12. INSTALL A/C COMPRESSOR (See page AC–47)
13. INSTALL GENERATOR DRIVE BELT
(See page CH–16)
14. INSTALL FRONT EXHAUST PIPE BRACKET TO NO.1 OIL PAN
Torque: 21 N·m (210 kgf·cm, 15 ft·lbf)
15. INSTALL FRONT EXHAUST PIPE (See page EM–76)
16. REMOVE RH FENDER APRON SEAL
17. REMOVE RH FRONT WHEEL
18. FILL ENGINE WITH OIL
19. START ENGINE AND CHECK FOR LEAKS
20. RECHECK ENGINE OIL LEVEL

OUTSIDE VEHICLE

MA001–10

GENERAL MAINTENANCE

These are maintenance and inspection items which are considered to be the owner's responsibility. They can be done by the owner or they can have them done at a service shop.
These items include those which should be checked on a daily basis, those which, in most cases, do not require (special) tools and those which are considered to be reasonable for the owner to do.
Items and procedures for general maintenance are as follows.

1. GENERAL NOTES

- Maintenance items may vary from country to country. Check the owner's manual supplement in which the maintenance schedule is shown.
- Every service item in the periodic maintenance schedule must be performed.
- Periodic maintenance service must be performed according to whichever interval in the periodic maintenance schedule occurs first, the odometer reading (miles) or the time interval (months).
- Maintenance service after the last period should be performed at the same interval as before unless otherwise noted.
- Failure to do even one item an cause the engine to run poorly and increase exhaust emissions.

2. TIRES

(a) Check the pressure with a gauge. If necessary, adjust.
(b) Check for cuts, damage or excessive wear.

3. WHEEL NUTS

When checking the tires, check the nuts for looseness or for missing nuts. If necessary, tighten them.

4. TIRE ROTATION

Check the owner's manual supplement in which the maintenance schedule is shown.

5. WINDSHIELD WIPER BLADES

Check for wear or cracks whenever they do not wipe clean. If necessary, replace.

6. FLUID LEAKS

(a) Check underneath for leaking fuel, oil, water or other fluid.
(b) If you smell gasoline fumes or notice any leak, have the cause found and corrected.

7. DOORS AND ENGINE HOOD

(a) Check that all doors and the tailgate operate smoothly, and that all latches lock securely.
(b) Check that the engine hood secondary latch secures the hood from opening when the primary latch is released.

INSIDE VEHICLE

MA002–11

GENERAL MAINTENANCE

These are maintenance and inspection items which are considered to be the owner's responsibility. They can be done by the owner or they can have them done at a service shop.
These items include those which should be checked on a daily basis, those which, in most cases, do not require (special) tools and those which are considered to be reasonable for the owner to do.
Items and procedures for general maintenance are as follows.

1. GENERAL NOTES

- Maintenance items may vary from country to country. Check the owner's manual supplement in which the maintenance schedule is shown.
- Every service item in the periodic maintenance schedule must be performed.
- Periodic maintenance service must be performed according to whichever interval in the periodic maintenance schedule occurs first, the odometer reading (miles) or the time interval (months).
- Maintenance service after the last period should be performed at the same interval as before unless otherwise noted.
- Failure to do even one item an cause the engine to run poorly and increase exhaust emissions.

2. LIGHTS

(a) Check that the headlights, stop lights, taillights, turn signal lights, and other lights are all working.
(b) Check the headlight aim.

3. WARNING LIGHTS AND BUZZERS

Check that all warning lights and buzzers function properly.

4. HORN

Check that it is working.

5. WINDSHIELD GLASS

Check for scratches, pits or abrasions.

6. WINDSHIELD WIPER AND WASHER

(a) Check operation of the wipers and washer.
(b) Check that the wipers do not streak.

7. WINDSHIELD DEFROSTER

Check that air comes out from the defroster outlet when operating the heater or air conditioner.

8. REAR VIEW MIRROR

Check that it is mounted securely.

9. SUN VISORS

Check that they move freely and are mounted securely.

10. STEERING WHEEL

Check that it has the specified freeplay. Be alert for changes in steering condition, such as hard steering, excessive freeplay or strange noises.

11. SEATS

(a) Check that the seat adjusters operate smoothly.
(b) Check that all latches lock securely in any position.
(c) Check that the head restraints move up and down smoothly and that the locks hold securely in any latch position.
(d) For fold–down seat backs, check that the latches lock securely.

12. SEAT BELTS

(a) Check that the seat belt system such as the buckles, retractors and anchors operate properly and smoothly.
(b) Check that the belt webbing is not cut, frayed, worn or damaged.

13. ACCELERATOR PEDAL

Check the pedal for smooth operation and uneven pedal effort or catching.

14. CLUTCH PEDAL (See page CL–2)

(a) Check the pedal for smooth operation.

(b) Check that the pedal has the proper freeplay.

15. BRAKE PEDAL (See page BR–5)

(a) Check the pedal for smooth operation.

(b) Check that the pedal has the proper reserve distance and freeplay.

(c) Check the brake booster function.

16. BRAKES

At a safe place, check that the brakes do not pull to one side when applied.

17. PARKING BRAKE (See page BR–8)

(a) Check that the lever has the proper travel.

(b) On a safe incline, check that the vehicle is held securely with only the parking brake applied.

18. AUTOMATIC TRANSMISSION ”PARK” MECHANISM

(a) Check the lock release button of the selector lever for proper and smooth operation.

(b) On a safe incline, check that the vehicle is held securely with the selector lever in ”P” position and all brakes released.

UNDER HOOD

MA003–09

GENERAL MAINTENANCE

1. GENERAL NOTES

- Maintenance items may vary from country to country. Check the owner's manual supplement in which the maintenance schedule is shown.
- Every service item in the periodic maintenance schedule must be performed.
- Periodic maintenance service must be performed according to whichever interval in the periodic maintenance schedule occurs first, the odometer reading (miles) or the time interval (months).
- Maintenance service after the last period should be performed at the same interval as before unless otherwise noted.
- Failure to do even one item an cause the engine to run poorly and increase exhaust emissions.

2. WINDSHIELD WASHER FLUID

Check that there is sufficient fluid in the tank.

3. ENGINE COOLANT LEVEL

Check that the coolant level is between the "FULL" and "LOW" lines on the see–through reservoir.

4. RADIATOR AND HOSES

(a) Check that the front of the radiator is clean and not blocked with leaves, dirt or bugs.
(b) Check the hoses for cracks, kinks, rot or loose connections.

5. BATTERY ELECTROLYTE LEVEL

Check that the electrolyte level of all battery cells is between the upper and lower level lines on the case.

6. BRAKE AND CLUTCH FLUID LEVELS

(a) Check that the brake and clutch fluid levels are near the upper level line on the see–through reservoirs.
(b) Check that the clutch fluid level is with is ± 5 mm (0.20 in.). of the reservoir hem.

7. ENGINE DRIVE BELTS

Check drive belt for fraying, cracks, wear or oiliness.

8. ENGINE OIL LEVEL

Check the level on the dipstick with the engine turned off.

9. POWER STEERING FLUID LEVEL

- Check the level.
- The level should be in the "HOT" or "COLD" range depending on the fluid temperature.

10. AUTOMATIC TRANSMISSION FLUID LEVEL

(a) Park the vehicle on a level surface.
(b) With the engine idling and the parking brake applied, shift the selector into all positions from "P" to "L", and then shift into "P" position.
(c) Pull out the dipstick and wipe off the fluid with a clean rag. Re–insert the dipstick and check that the fluid level is in the HOT range.
(d) Do this check with the fluid at normal driving temperature (70 – 80˚C, 158 – 176˚F).

HINT:

Wait until the engine cools down (approx. 30 min.) before checking the fluid level after extended driving at high speeds, in hot weather, in heavy traffic or pulling a trailer.

11. EXHAUST SYSTEM

If any change in the sound of the exhaust or smell of the exhaust fumes is noticed, have the cause located and corrected.

ENGINE

MA00L–01

INSPECTION

1. REPLACE TIMING BELT
5S–FE: (See page EM–17)
1MZ–FE: (See page EM–15)

2. INSPECT DRIVE BELTS
5S–FE: (See page CH–1)
1MZ–FE: (See page CH–1)

3. REPLACE SPARK PLUGS
5S–FE: (See page IG–1)
1MZ–FE: (See page IG–1)

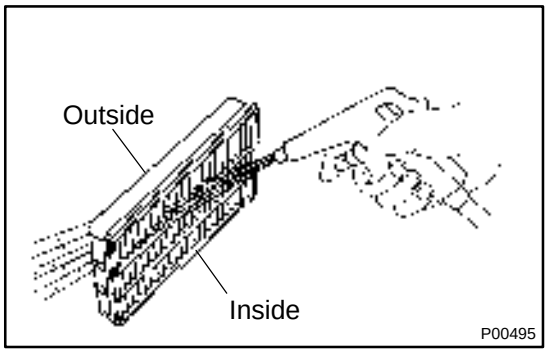

4. INSPECT AIR FILTER

(a) Visually check that the air filter is not excessively dirty or oily.

(b) Clean the air filter with compressed air.

First blow from the inside thoroughly, then blow off the outside of the air filter.

5. REPLACE AIR FILTER

Replace the air filter with a new one.

6. REPLACE ENGINE OIL AND OIL FILTER
5S–FE: (See page LU–2)
1MZ–FE: (See page LU–3)

7. REPLACE ENGINE COOLANT
5S–FE: (See page CO–2)
1MZ–FE: (See page CO–2)

8. 1MZ–FE:
INSPECT CHARCOAL CANISTER
(See page EC–6)

9. REPLACE GASKET IN FUEL TANK CAP
5S–FE: (See page EC–6)
1MZ–FE: (See page EC–6)

10. INSPECT FUEL LINES AND CONNECTIONS
5S–FE: (See page EC–6)
1MZ–FE: (See page EC–6)

11. INSPECT EXHAUST PIPES AND MOUNTINGS
5S–FE: (See page EC–15)
1MZ–FE: (See page EC–17)

12. ADJUST VALVE CLEARANCE
5S–FE: (See page EM–4)
1MZ–FE: (See page EM–4)

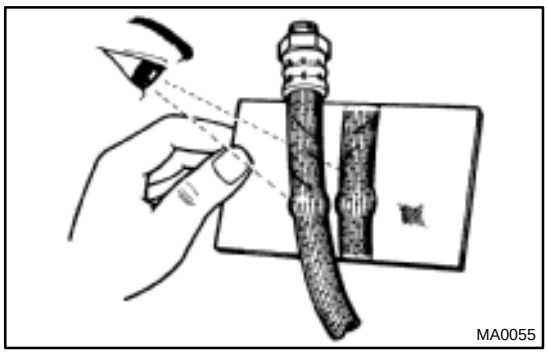

BRAKE

MA00M–01

INSPECTION

1. INSPECT BRAKE LINE PIPES AND HOSES

HINT:

Check in a well lighted area. Check the entire circumference and length of the brake hoses using a mirror as required. Turn the front wheels fully right or left before checking the front brake.

(a) Check all brake lines and hoses for:
- Damage
- Wear
- Deformation
- Cracks
- Corrosion
- Leaks
- Bends
- Twists

(b) Check all clamps for tightness and connections for leakage.

(c) Check that the hoses and lines are clear of sharp edges, moving parts and the exhaust system.

(d) Check that the lines installed in grommets pass through the center of the grommets.

2. INSPECT FRONT BRAKE PADS AND DISCS
(See page BR–22)

3. INSPECT REAR BRAKE PADS AND DISCS
(See page BR–37)

4. INSPECT BRAKE LININGS AND DRUMS
(See page BR–34)

CHASSIS

MA00N–01

INSPECTION

1. INSPECT STEERING LINKAGE

(a) Check the steering wheel freeplay. (See page SR–8)

(b) Check the steering linkage for looseness or damage.

Check that:

- Tie rod ends do not have excessive play.
- Dust seals and boots are not damaged.
- Boot clamps are not loose.

2. INSPECT SRS AIRBAG (See page RS–2)

3. INSPECT STEERING GEAR HOUSING OIL

Check the steering gear housing for oil leakage.

4. INSPECT DRIVE SHAFT BOOTS

Check the drive shaft boots for clamp looseness, leakage or damage.

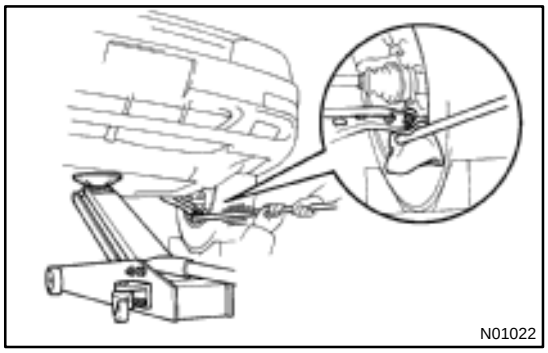
N01022

5. INSPECT BALL JOINTS AND DUST COVERS

(a) Inspect the ball joints for excessive looseness.

- Jack up the front of the vehicle and place wooden blocks with a height of 180 – 200 mm (7.09 – 7.87 in.) under the front tires.
- Lower the jack until there is about half a load on the front coil spring. Place stands under the vehicle for safety.
- Check that the front wheels are pointing straight ahead, and block them with chocks.
- Using a lever, pry up the end of the lower arm, and check the amount of play.

Maximum ball joint vertical play: 0 mm (0 in.)

If there is play, replace the ball joint.

(b) Check the dust cover for damage.

6. CHECK TRANSAXLE OIL (FLUID)

(a) Visually check the transaxle for oil (fluid) leakage.

If leakage is found, check for the cause and repair.

7. REPLACE TRANSAXLE OIL (FLUID)

(a) M/T:

Replace the transaxle oil.

S51: (See page MX–4)

E153: (See page MX–4)

(b) A/T:

Replace the transaxle fluid.

A140E: (See page DI–389)

A541E: (See page DI–438)

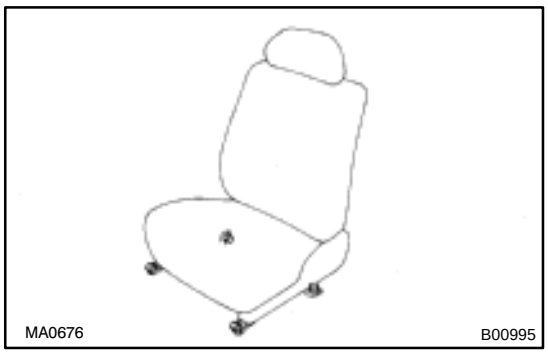

BODY

INSPECTION

MA00O–01

1. TIGHTEN BOLTS AND NUTS ON CHASSIS AND BODY

Tighten these parts:

- Front seat mount bolts

Torque: 37 N·m (375 kgf·cm, 27 ft·lbf)

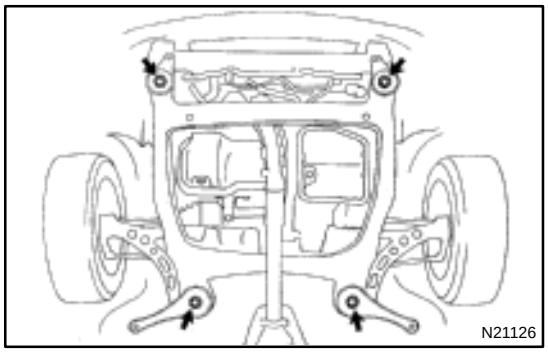

- Front suspension member–to–body mounting bolts

Torque: 181 N·m (1,850 kgf·cm, 134 ft·lbf)

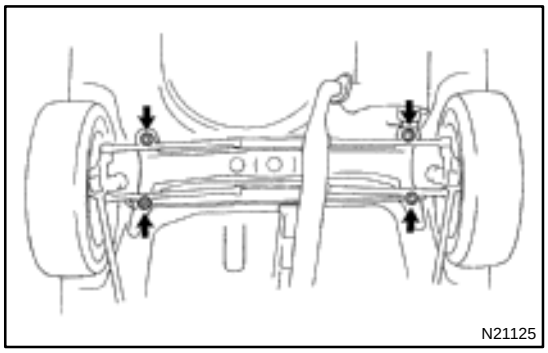

- Rear suspension member–to–body mounting nuts

Torque: 51 N·m (520 kgf·cm, 38 ft·lbf)

Check that the brakes work properly and do not drag.

2. FINAL INSPECTION

(a) Check the operation of the body parts:

- Hood:
  Auxiliary catch operates properly
  Hood locks securely when closed
- Front and rear doors:
  Door lock operates properly
  Doors close properly
- Luggage compartment door and back door:
  Door lock operates properly
- Seats:
  Seat adjusts easily and locks securely in any position
  Front seat back locks securely in any position
  Folding–down rear seat backs lock securely

(b) Road test:

- Check the engine and chassis for abnormal noises.
- Check that the vehicle does not wander or pull to one side.

- Check that the brakes work properly and do not drag.
- Do setting of the parking brake shoes and drum.

(c) Be sure to deliver a clean car. Especially check:

- Steering wheel
- Shift lever knob
- All switch knobs
- Door handles
- Seats

MANUAL TRANSAXLE SYSTEM

MX04A–01

PRECAUTION

When working with FIPG material, you must observe the following items.

- ★ **Using a razor blade and gasket scraper, remove all the old FIPG material from the gasket surfaces.**
- ★ **Thoroughly clean all components to remove all the loose material.**
- ★ **Clean both sealing surfaces with a non–residue solvent.**
- ★ **Apply FIPG in an approx. 1 mm (0.04 in.) wide bead along the sealing surface.**
- ★ **Parts must be assembled within 10 minutes of application. Otherwise, the FIPG material must be removed and reapplied.**

TROUBLESHOOTING

MX04B–04

PROBLEM SYMPTOMS TABLE

Use the table below to help you find the cause of the problem. The numbers indicate the priority of the likely cause of the problem. Check each part in order. If necessary, replace these parts.

Symptom	Suspect Area	See page
Noise	1. Oil (Level low)	MX–4
	2. Oil (Wrong)	MX–4
	3. Gear (Worn or damaged)	MX–9
	4. Bearing (Worn or damaged)	MX–9
Oil leakage	1. Oil (Level too high)	MX–4
	2. Gasket (Damaged)	MX–9
	3. Oil seal (Worn or damaged)	MX–9
	4. O–ring (Worn or damaged)	MX–9
Hard to shift or will not shift	1. Control cable (Faulty)	MX–43
	2. Synchronizer ring (Worn or damaged)	MX–9 MX–20
	3. Shift key spring (Damaged)	MX–28 MX–9 MX–20 MX–28
Jumps out of gear	1. Locking ball spring (Damaged)	MX–9
	2. Shift fork (Worn)	MX–9
	3. Gear (Worn or damaged)	MX–9
	4. Bearing (Worn or damaged)	MX–9

MANUAL TRANSAXLE UNIT

COMPONENTS

MX04C–01

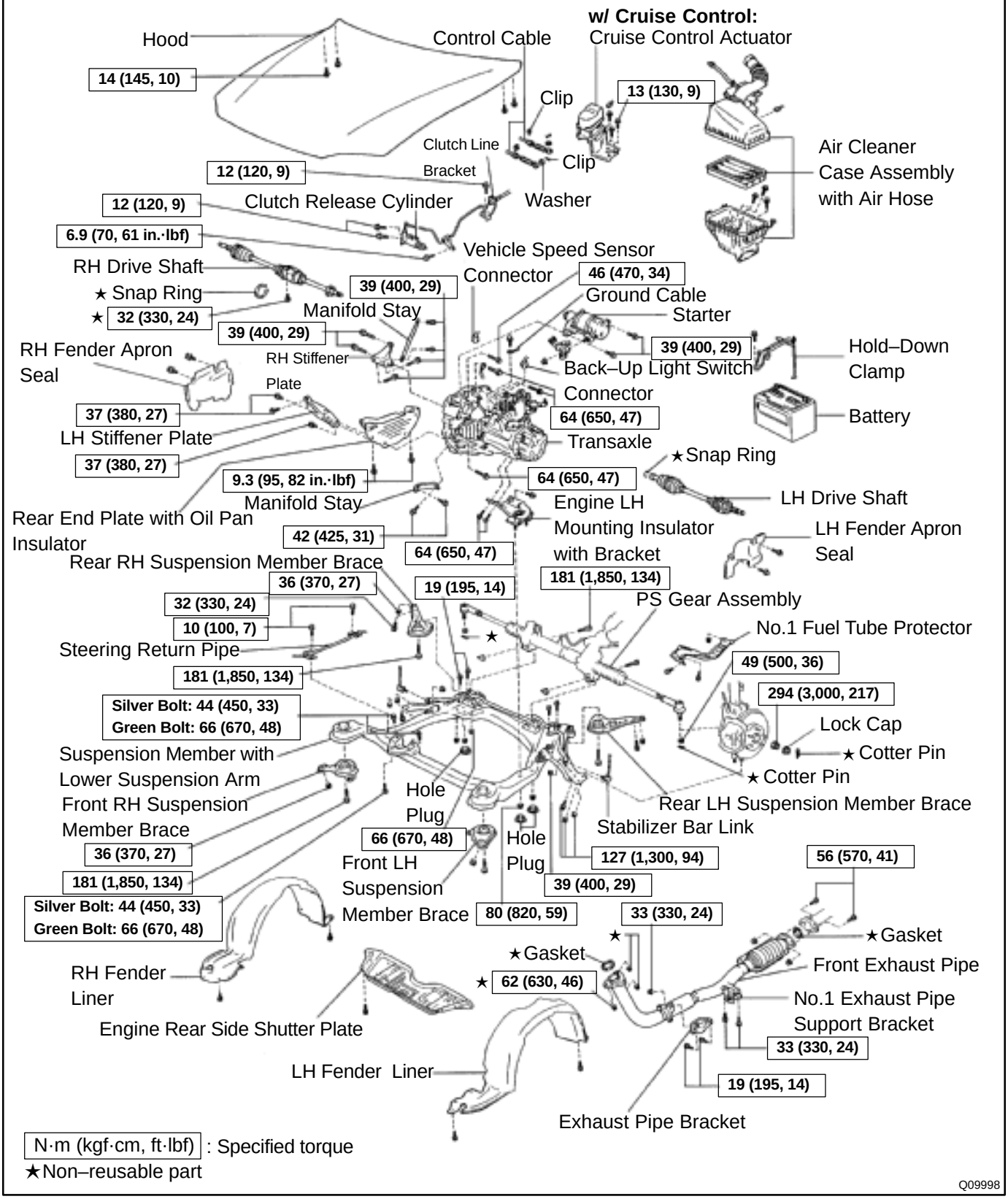

MX04D–01

REMOVAL

1. REMOVE HOOD

HINT:

At the time of installation, please refer to the following item.

Adjust the hood.

(See page BO–10)

2. REMOVE BATTERY AND AIR CLEANER CASE ASSEMBLY WITH AIR HOSE

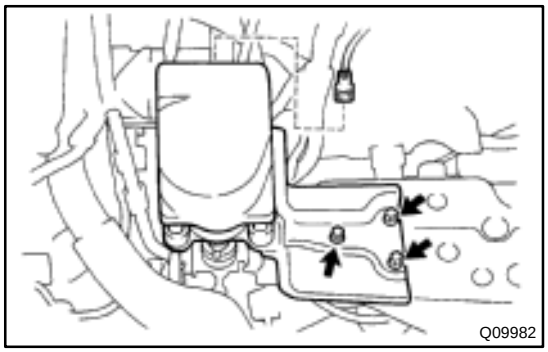

3. w/ Cruise Control:
REMOVE CRUISE CONTROL ACTUATOR

(a) Disconnect the cruise control actuator connector.

(b) Remove the 3 bolts and cruise control actuator with the bracket.

Torque: 13 N·m (130 kgf·cm, 9 ft·lbf)

4. REMOVE STARTER

(a) Disconnect the connector and wire from the starter.

(b) Remove the 2 bolts and starter.

Torque: 39 N·m (400 kgf·cm, 29 ft·lbf)

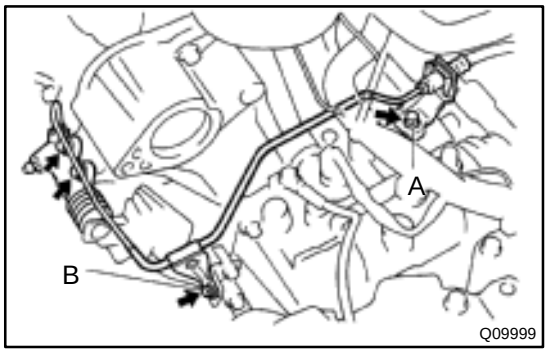

5. DISCONNECT CLUTCH RELEASE CYLINDER

(a) Remove the 2 bolts and disconnect the release cylinder.

Torque: 12 N·m (120 kgf·cm, 9 ft·lbf)

(b) Remove the 2 set bolts of the clutch line bracket.

Torque:
Bolt A: 12 N·m (120 kgf·cm, 9 ft·lbf)
Bolt B: 6.9 N·m (70 kgf·cm, 61 in.·lbf)

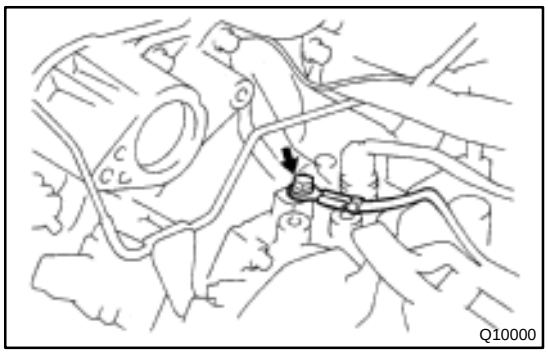

6. DISCONNECT GROUND CABLE

Remove the set bolt of the ground cable from the transaxle.

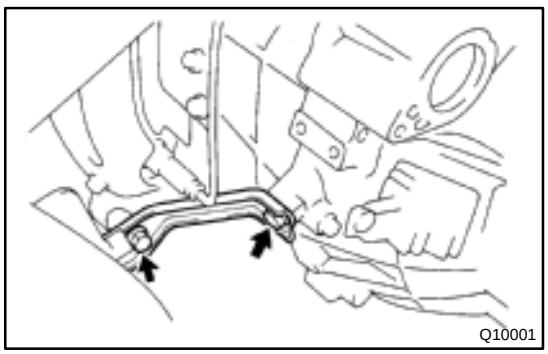

7. REMOVE MANIFOLD STAY

Remove the 2 bolts and stay.

Torque: 42 N·m (425 kgf·cm, 31 ft·lbf)

8. DISCONNECT VEHICLE SPEED SENSOR AND BACK–UP LIGHT SWITCH CONNECTORS

9. DISCONNECT CONTROL CABLE

(a) Remove the 2 clips and washers.

(b) Remove the 2 clips from the cables.

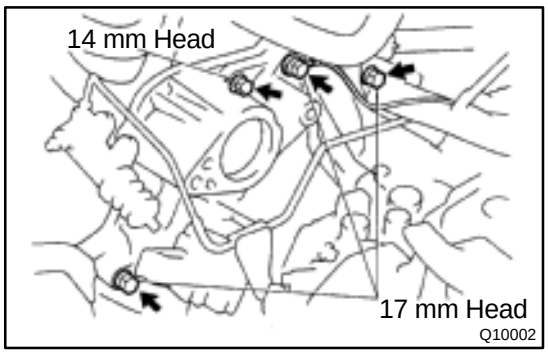

10. REMOVE 4 TRANSAXLE UPPER SIDE MOUNTING BOLTS
Torque:
17 mm head: 64 N·m (650 kgf·cm, 47 ft·lbf)
14 mm head: 46 N·m (470 kgf·cm, 34 ft·lbf)

11. REMOVE FRONT WHEEL
Torque: 103 N·m (1,050 kgf·cm, 76 ft·lbf)

12. RAISE VEHICLE

NOTICE:
Make sure that the vehicle is securely supported.

13. REMOVE ENGINE REAR SIDE SHUTTER PLATE AND LH AND RH FENDER APRON SEALS

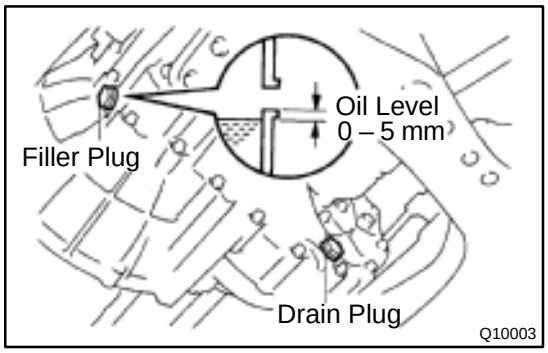

14. DRAIN TRANSAXLE OIL
Oil grade: API GL–4 or GL–5
Viscosity: SAE 75W–90
Capacity: 2.6 liters (2.7 US qts, 2.3 Imp. qts)
Torque: 49 N·m (500 kgf·cm, 36 ft·lbf)

15. REMOVE LH AND RH DRIVE SHAFTS
(See page SA–16)

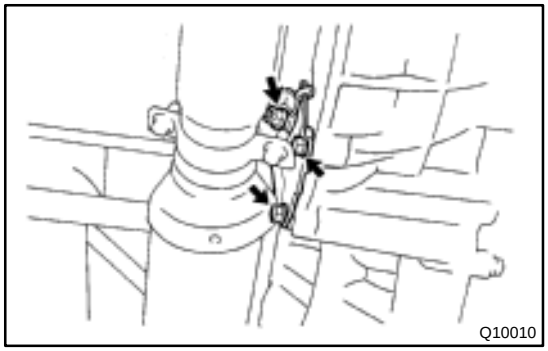

16. REMOVE FRONT EXHAUST PIPE

(a) Remove the 2 bolts, nut and exhaust pipe bracket.
Torque:
Bolt: 19 N·m (195 kgf·cm, 14 ft·lbf)
Nut: 33 N·m (330 kgf·cm, 24 ft·lbf)

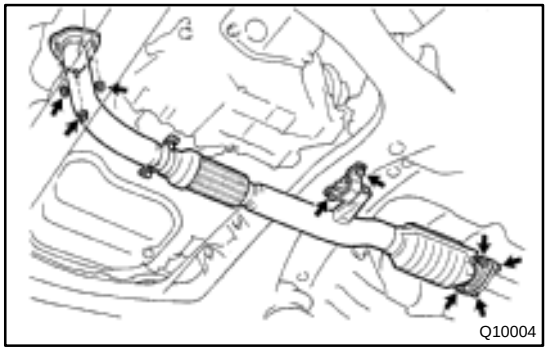

(b) Remove the 3 nuts and gasket from the exhaust manifold.
Torque: 62 N·m (630 kgf·cm, 46 ft·lbf)

(c) Remove the 2 bolts, nuts and gasket.
Torque: 56 N·m (570 kgf·cm, 41 ft·lbf)

(d) Remove the 2 set bolts of the No.1 exhaust pipe support bracket.
Torque: 33 N·m (330 kgf·cm, 24 ft·lbf)

(e) Remove the front exhaust pipe.

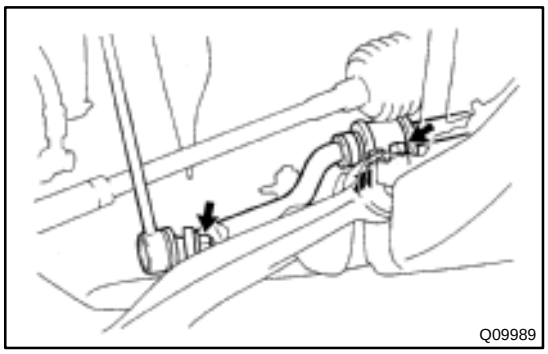

17. DISCONNECT PS GEAR ASSEMBLY FROM FRONT SUSPENSION MEMBER

(a) Remove the 2 nuts and disconnect the stabilizer bar link from the stabilizer bar.
Torque: 39 N·m (400 kgf·cm, 29 ft·lbf)

(b) Remove the 4 set bolts of the stabilizer bar bracket.
Torque: 19 N·m (195 kgf·cm, 14 ft·lbf)

(c) Remove the 2 bolts, nut and No.1 fuel tube protector.

(d) Tie the PS gear assembly to the proper position with a code or an equivalent to suspend the assembly securely.

(e) Remove the 2 set bolts and nuts of the PS gear assembly.
Torque: 181 N·m (1,850 kgf·cm, 134 ft·lbf)

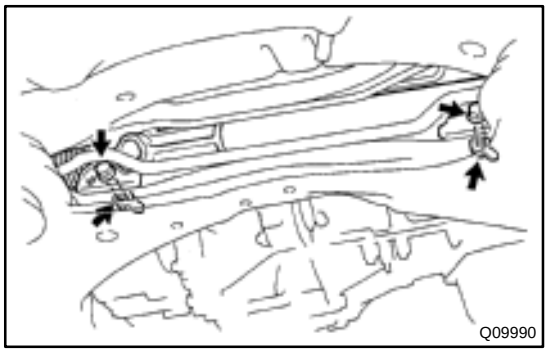

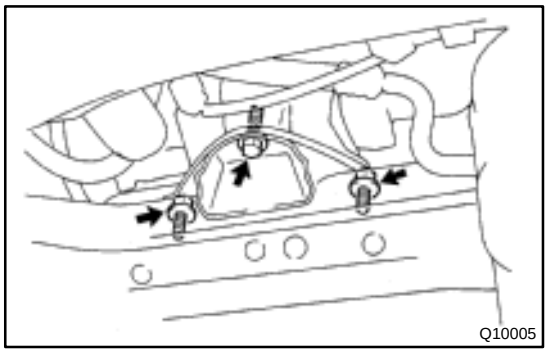

18. REMOVE 3 ENGINE FRONT SIDE MOUNTING BOLTS
Torque:
Silver bolt: 44 N·m (450 kgf·cm, 33 ft·lbf)
Green bolt: 66 N·m (670 kgf·cm, 48 ft·lbf)

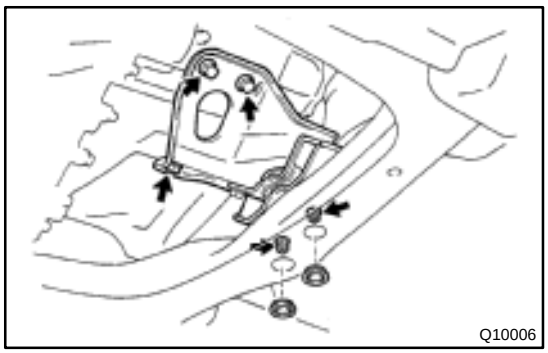

19. REMOVE LH ENGINE MOUNTING INSULATOR WITH BRACKET

(a) Remove the 2 hole plugs, nuts and 3 bolts.
Torque:
Bolt: 64 N·m (650 kgf·cm, 47 ft·lbf)
Nut: 80 N·m (820 kgf·cm, 59 ft·lbf)

(b) Lift up the transaxle and remove the left engine mounting insulator with the bracket.

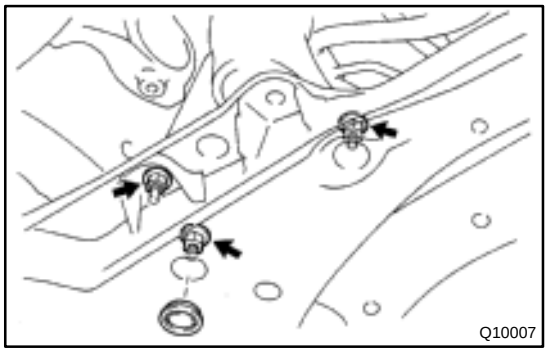

20. REMOVE HOLE PLUG AND 3 ENGINE REAR SIDE MOUNTING NUTS
Torque: 66 N·m (670 kgf·cm, 48 ft·lbf)

21. ATTACH ENGINE SLING DEVICE TO ENGINE HANGER
(See page EM–69)

22. DISCONNECT STEERING RETURN PIPE FROM FRONT SUSPENSION MEMBER

Remove the 2 bolts.
Torque: 10 N·m (100 kgf·cm, 7 ft·lbf)

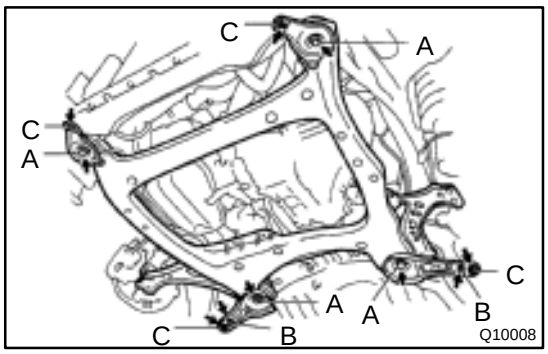

23. REMOVE FRONT SUSPENSION MEMBER WITH LOWER SUSPENSION ARM

(a) Remove the LH and RH fender liner set screws.

(b) Remove the 6 bolts, 4 nuts, front LH and RH suspension member braces, rear LH and RH suspension member braces and front suspension member with the lower suspension arm.

Torque:
Bolt A: 181 N·m (1,850 kgf·cm, 134 ft·lbf)
Bolt B: 32 N·m (330 kgf·cm, 24 ft·lbf)
Nut C: 36 N·m (370 kgf·cm, 27 ft·lbf)

24. JACK UP TRANSAXLE SLIGHTLY

Using a transmission jack, support the transaxle.

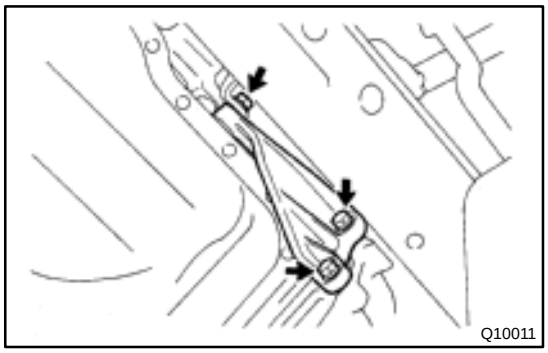

25. REMOVE LH STIFFENER PLATE

Remove the 3 bolts and LH stiffener plate.

Torque: 37 N·m (380 kgf·cm, 27 ft·lbf)

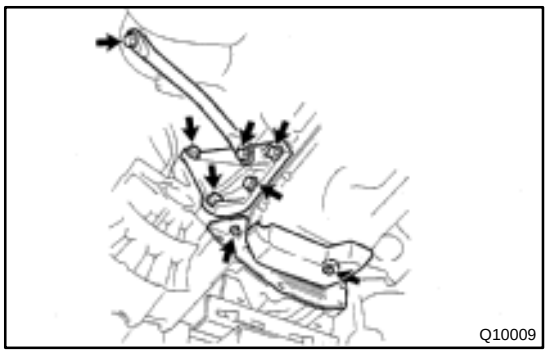

26. REMOVE REAR END PLATE WITH OIL PAN INSULATOR AND RH STIFFENER PLATE

(a) Remove the 2 bolts and rear end plate with the oil pan insulator.

Torque: 9.3 N·m (95 kgf·cm, 82 in.·lbf)

(b) Remove the 2 bolts and manifold stay.

Torque: 39 N·m (400 kgf·cm, 29 ft·lbf)

(c) Remove the 4 bolts and RH stiffener plate.

Torque: 39 N·m (400 kgf·cm, 29 ft·lbf)

27. REMOVE TRANSAXLE

Lower the engine left side and remove the transaxle from the engine.

HINT:

At the time of installation, please refer to the following items.

★ Align the input shaft with the clutch disc and install the transaxle to the engine.

★ Temporarily tighten the transaxle mounting bolts.

MX04E–01

INSTALLATION

Installation is in the reverse order of removal (See page MX–4).

HINT:

★ Front wheel alignment (See page SA–4).

★ Do the road test.

MANUAL TRANSAXLE ASSEMBLY

MX04F–02

COMPONENTS

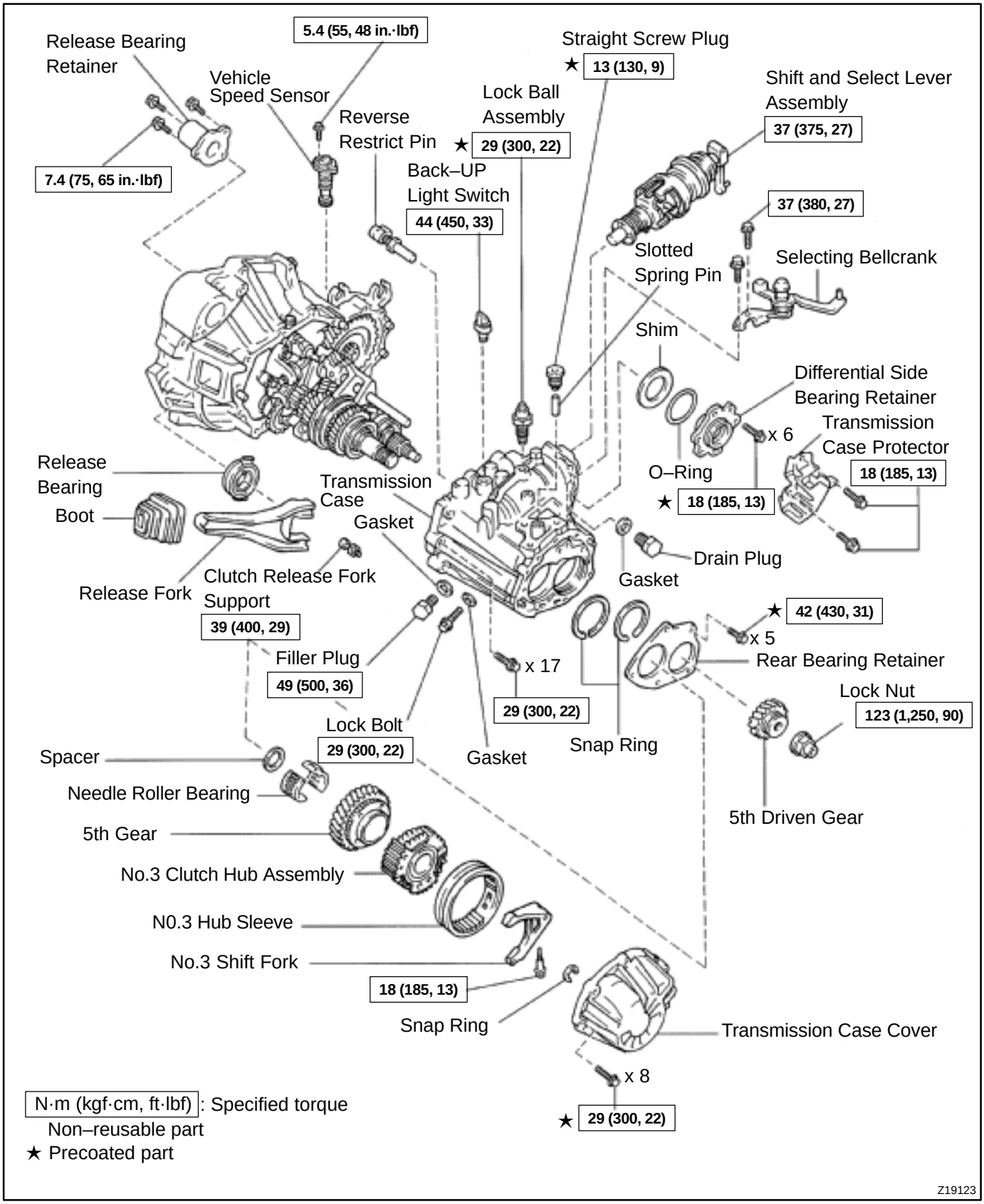

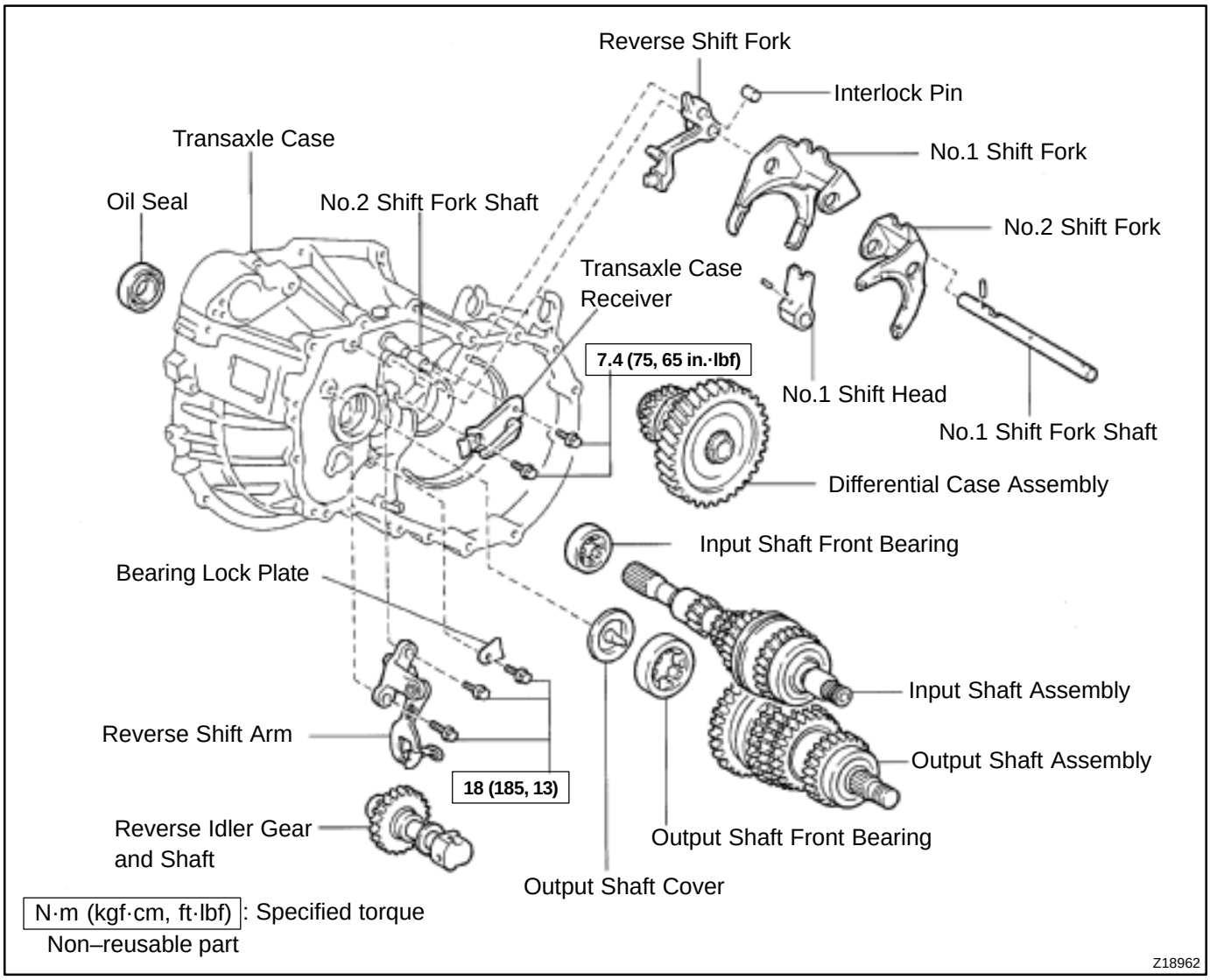
Reverse Shift Fork
Interlock Pin
Transaxle Case
No.1 Shift Fork
Oil Seal
No.2 Shift Fork Shaft
No.2 Shift Fork
Transaxle Case Receiver
7.4 (75, 65 in.·lbf)
No.1 Shift Head
No.1 Shift Fork Shaft
Differential Case Assembly
Input Shaft Front Bearing
Bearing Lock Plate
Input Shaft Assembly
Reverse Shift Arm
Output Shaft Assembly
18 (185, 13)
Reverse Idler Gear and Shaft
Output Shaft Front Bearing
Output Shaft Cover
N·m (kgf·cm, ft·lbf): Specified torque
Non–reusable part
Z18962

MX04G–02

DISASSEMBLY

1. REMOVE RELEASE FORK AND BEARING

2. REMOVE BACK–UP LIGHT SWITCH

Torque: 44 N·m (450 kgf·cm, 33 ft·lbf)

3. REMOVE BOLT AND VEHICLE SPEED SENSOR

Torque: 5.4 N·m (55 kgf·cm, 48 in.·lbf)

4. REMOVE RELEASE BEARING RETAINER

Remove the 3 bolts and retainer.

Torque: 7.4 N·m (75 kgf·cm, 65 in.·lbf)

5. REMOVE SELECTING BELLCRANK

Remove the 2 bolts and selecting bellcrank.

Torque: 37 N·m (380 kgf·cm, 27 ft·lbf)

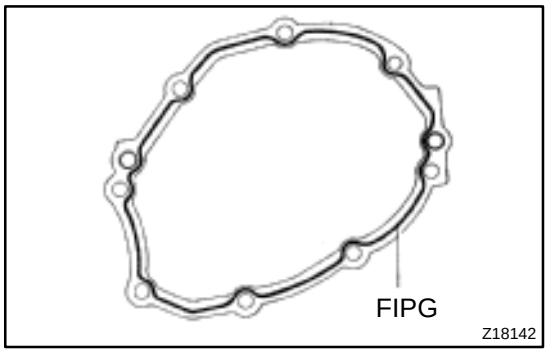

6. REMOVE TRANSMISSION CASE COVER

(a) Remove the 8 bolts.

Sealant:

Part No.08833 – 00080, THREE BOND 1344, LOCTITE 242 or equivalent

Torque: 29 N·m (300 kgf·cm, 22 ft·lbf)

(b) Using a plastic hammer, tap the transmission case cover and remove it.

FIPG:

Part No. 08826 – 00090, THREE BOND 1281 or equivalent

7. REMOVE LOCK BALL ASSEMBLY

Sealant:

Part No.08833 – 00080, THREE BOND 1344, LOCTITE 242 or equivalent

Torque: 29 N·m (300 kgf·cm, 22 ft·lbf)

8. REMOVE SHIFT AND SELECT LEVER ASSEMBLY

HINT:

At the time of installation, please refer to the following item.

Apply FIPG to the underside of the flanged portion of the control shaft cover.

FIPG:

Part No. 08826 – 00090, THREE BOND 1281 or equivalent

Torque: 37 N·m (375 kgf·cm, 27 ft·lbf)

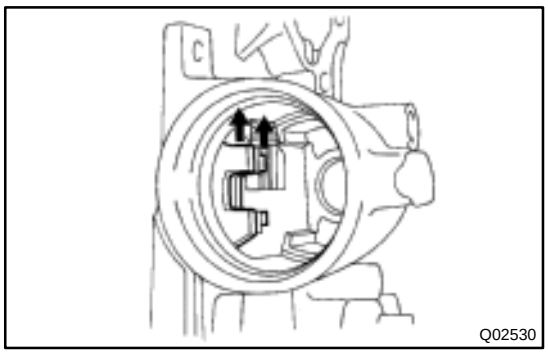

9. REMOVE OUTPUT SHAFT LOCK NUT

(a) Unstake the nut.

(b) Engage the gear double meshing.

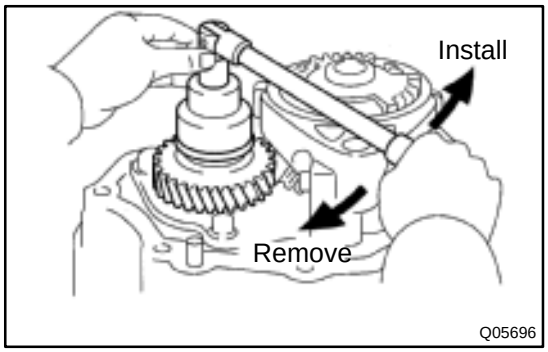

(c) Rotate the lock nut clockwise and remove it.

Torque: 123 N·m (1,250 kgf·cm, 90 ft·lbf)

HINT:

The lock nut has LH threads.

(d) Disengage the gear double meshing.

10. REMOVE NO.3 HUB SLEEVE AND NO.3 SHIFT FORK

(a) Remove the No.3 shift fork set bolt.

Torque: 18 N·m (185 kgf·cm, 13 ft·lbf)

(b) Remove the No.3 hub sleeve and No.3 shift fork.

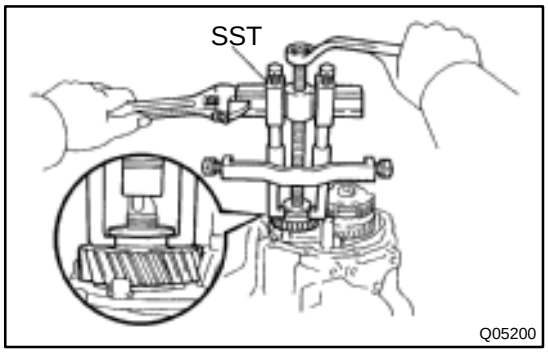

11. REMOVE 5TH DRIVEN GEAR

Using SST, remove the 5th driven gear.

SST 09950–40011

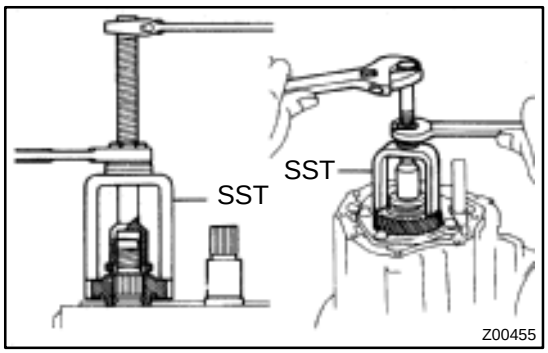

HINT:

At the time of installation, please refer to the following item.

Using SST, install the 5th driven gear.

SST 09309–12020

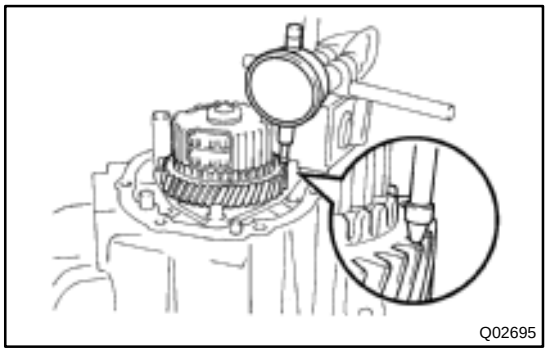

12. MEASURE 5TH GEAR THRUST CLEARANCE

Using a dial indicator, measure the thrust clearance.

Standard clearance:
0.20 – 0.40 mm (0.0079 – 0.0157 in.)
Maximum clearance:
0.45 mm (0.0177 in.)

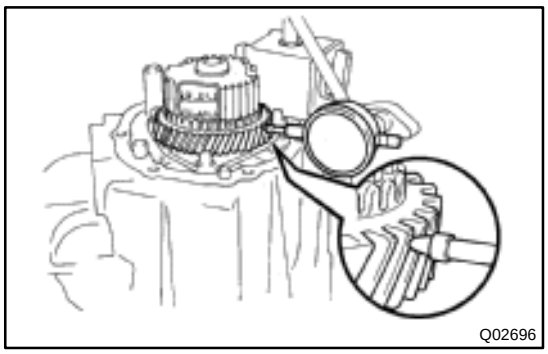
Q02696

13. MEASURE 5TH GEAR RADIAL CLEARANCE

Using a dial indicator, measure the radial clearance.

Standard clearance:
0.009 – 0.050 mm (0.0004 – 0.0020 in.)
Maximum clearance:
0.070 mm (0.0028 in.)

If the clearance exceeds the maximum, replace the gear, needle roller bearing or input shaft.

14. REMOVE NO.3 CLUTCH HUB AND 5TH GEAR

(a) Using 2 screwdrivers and a hammer, tap out the snap ring.

HINT:

At the time of installation, please refer to the following item.
Select a snap ring that allows the minimum axial play.

Mark	Thickness mm (in.)	Mark	Thickness mm (in.)
13	2.20–2.25 (0.0866–0.0886)	21	2.60–2.65 (0.1024–0.1043)
14	2.25–2.30 (0.0886–0.0906)	22	2.65–2.70 (0.1043–0.1063)
15	2.30–2.35 (0.0906–0.0925)	23	2.70–2.75 (0.1063–0.1083)
16	2.35–2.40 (0.0925–0.0945)	24	2.75–2.80 (0.1083–0.1102)
17	2.40–2.45 (0.0945–0.0965)	25	2.80–2.85 (0.1102–0.1122)
18	2.45–2.50 (0.0965–0.0984)	26	2.85–2.90 (0.1122–0.1142)
19	2.50–2.55 (0.0984–0.1004)	27	2.90–2.95 (0.1142–0.1161)
20	2.55–2.60 (0.1004–0.1024)	–	–

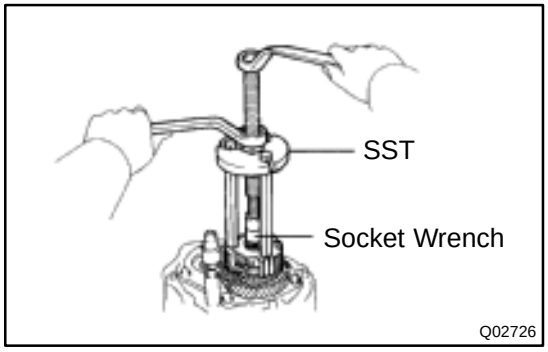

Q02726

(b) Using SST and a socket wrench, remove the No.3 clutch hub with the synchronizer ring.
SST 09950–30010

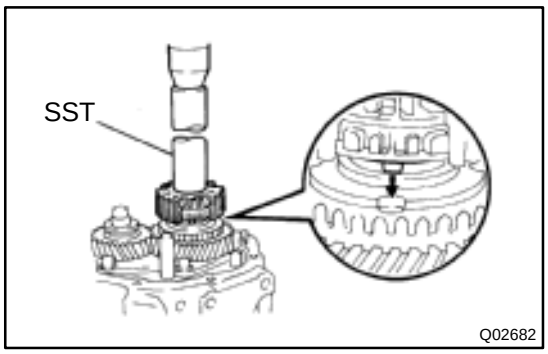

HINT:
At the time of installation, please refer to the following item.
Using SST and a press, install the No.3 clutch hub assembly.
SST 09612–22011

(c) Remove the 5th gear.

15. REMOVE NEEDLE ROLLER BEARING

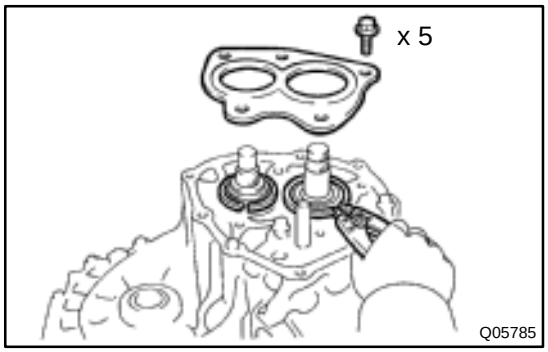

16. REMOVE REAR BEARING RETAINER

Remove the 5 bolts and retainer.

Sealant:
Part No.08833 – 00070, THREE BOND 1324 or equivalent
Torque: 42 N·m (430 kgf·cm, 31 ft·lbf)

17. REMOVE BEARING SNAP RING

Using a snap ring expander, remove the 2 snap rings.

HINT:
If it is difficult to remove and install the snap rings, pull up the shafts.

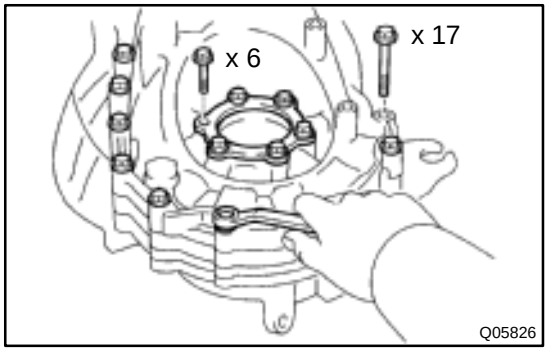

18. REMOVE REVERSE IDLER GEAR SHAFT LOCK BOLT AND GASKET
Torque: 29 N·m (300 kgf·cm, 22 ft·lbf)

19. REMOVE DIFFERENTIAL SIDE BEARING RETAINER AND SHIM

Remove the 6 bolts, retainer and shim.

Sealant:
Part No.08833 – 00080, THREE BOND 1344, LOCTITE 242 or equivalent
Torque: 18 N·m (185 kgf·cm, 13 ft·lbf)

20. REMOVE TRANSMISSION CASE

(a) Remove the 17 bolts.
Torque: 29 N·m (300 kgf·cm, 22 ft·lbf)

(b) Using a plastic hammer, tap the transmission case and remove it.
FIPG:
Part No. 08833 – 00090, THREE BOND 1281 or equivalent

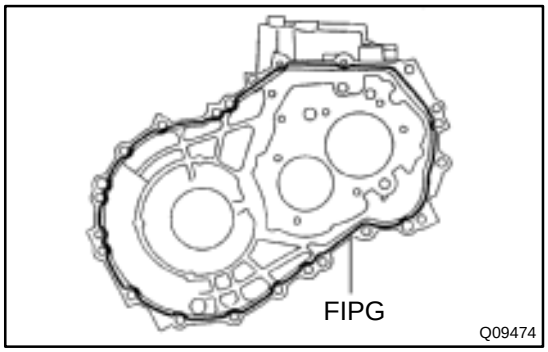

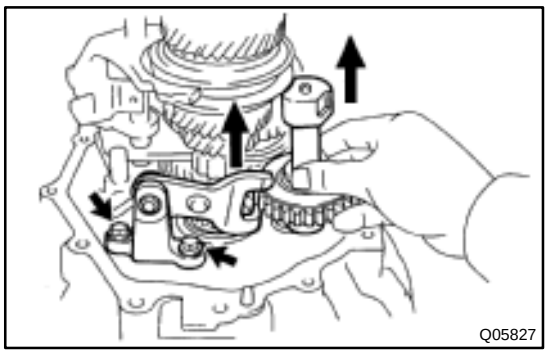

21. REMOVE REVERSE IDLER GEAR AND SHAFT

(a) Pull out the shaft.

(b) Remove the idler gear and thrust washer.

22. REMOVE REVERSE SHIFT ARM

(a) Shift the fork shaft into reverse.

(b) Remove the 2 bolts and pull off the reverse shift arm.
Torque: 18 N·m (185 kgf·cm, 13 ft·lbf)

23. REMOVE NO.1 SHIFT FORK SHAFT, NO.1 SHIFT HEAD, NO.1 AND NO.2 SHIFT FORKS, REVERSE SHIFT FORK WITH INTERLOCK PIN, INPUT AND OUTPUT SHAFTS ASSEMBLY

24. REMOVE DIFFERENTIAL CASE ASSEMBLY

25. REMOVE MAGNET FROM TRANSAXLE CASE

26. REMOVE NO.2 SHIFT FORK SHAFT

(a) Using a hexagon wrench, remove the straight screw plug.
Sealant:
Part No.08833 – 00080, THREE BOND 1344, LOCTITE 242 or equivalent
Torque: 13 N·m (130 kgf·cm, 9 ft·lbf)

(b) Using a pin punch and hammer, drive out the slotted spring pin.

(c) Pull out the shaft.

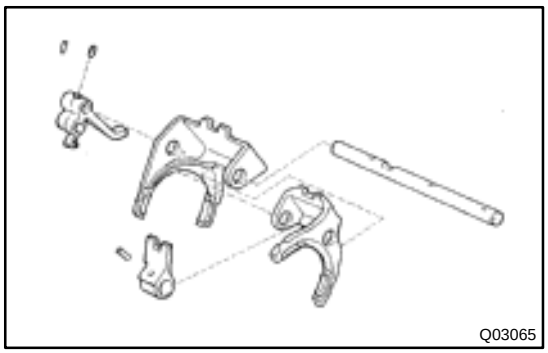

27. SEPARATE NO.1 SHIFT FORK SHAFT, NO.1 SHIFT HEAD, NO.1, NO.2 SHIFT FORKS AND REVERSE SHIFT FORK

(a) Mount the shift forks to the vise.

(b) Using a pin punch and hammer, drive out the slotted spring pin from the No.1 fork shaft.

(c) Using a pin punch and hammer, drive out the slotted spring pin from the No.1 fork shaft, as shown.

(d) Separate the No.1 shift fork shaft, No.1 shift head, No.1 and No.2 shift forks and reverse shift fork.

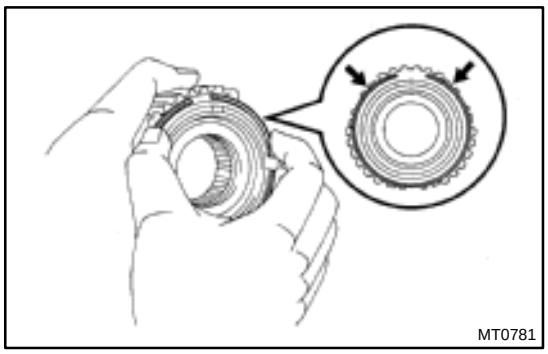

28. REMOVE NO.5 SYNCHRONIZER RING WITH KEY SPRING FROM NO.3 CLUTCH HUB

(a) Remove the No.5 synchronizer ring with the key spring from the No.3 clutch hub.

(b) Using a screwdriver, remove the snap ring.

HINT:

Wrap vinyl tape on the screwdriver to prevent damaging the synchronizer ring.

(c) Remove the synchronizer rings.

MX05M–01

INSPECTION

1. INSPECT NO.5 SYNCHRONIZER RING

(a) Check for wear or damage.

(b) Check the braking effect of the synchronizer ring.

Turn the middle No.5 synchronizer ring in one direction while pushing it to the outer No.5 synchronizer ring. Check that the ring locks.

If the braking effect is insufficient, replace the synchronizer ring.

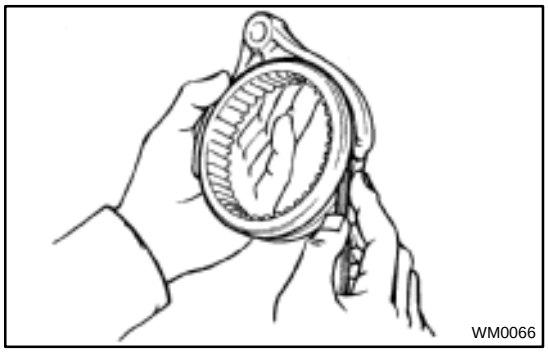

2. INSPECT NO.3 SHIFT FORK AND NO.3 HUB SLEEVE CLEARANCE

Using a feeler gauge, measure the clearance between the hub sleeve and shift fork.

Maximum clearance:
1.0 mm (0.039 in.)

If the clearance exceeds the maximum, replace the shift fork or hub sleeve.

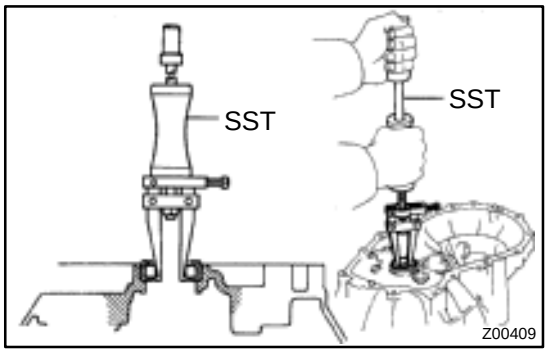

3. IF NECESSARY, REPLACE INPUT SHAFT FRONT BEARING

(a) Remove the 2 bolts and transaxle case receiver.

(b) Using SST, pull out the bearing.
SST 09308–00010

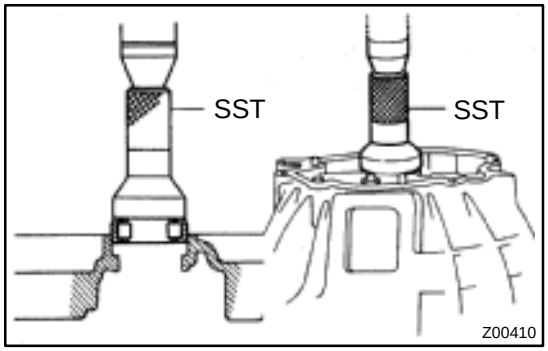

(c) Using SST, press in a new bearing.
SST 09310–35010

(d) Install the transaxle case receiver and torque the 2 bolts.
Torque: 7.4 N·m (75 kgf·cm, 65 in.·lbf)

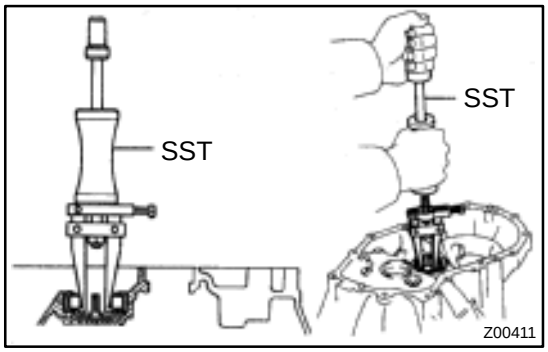

4. IF NECESSARY, REPLACE OUTPUT SHAFT FRONT BEARING

(a) Remove the bolt and bearing lock plate.

(b) Using SST, pull out the bearing.
SST 09308–00010

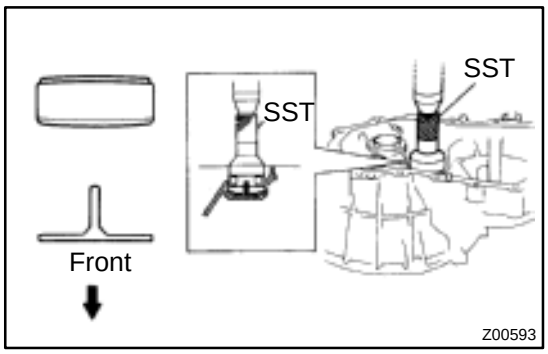

(c) Using SST, press in a new bearing.
SST 09310–35010
(d) Install the bearing lock plate and torque the bolt.
Torque: 18 N·m (185 kgf·cm, 13 ft·lbf)

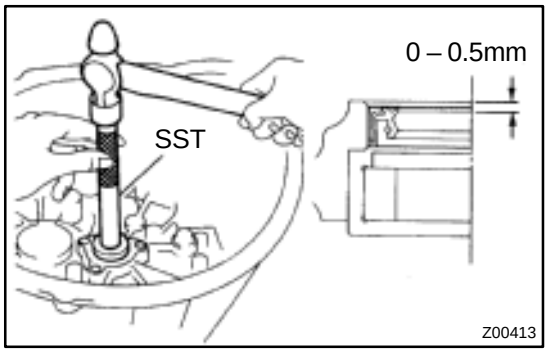

5. IF NECESSARY, REPLACE INPUT SHAFT FRONT OIL SEAL

(a) Using a screwdriver, pry out the oil seal.
(b) Using SST, drive in a new oil seal.
SST 09608–00081, 09950–70010 (09951–07150)
Drive in depth:
0 – 0.5 mm (0 – 0.020 in.)
(c) Coat the lip of the oil seal with MP grease.

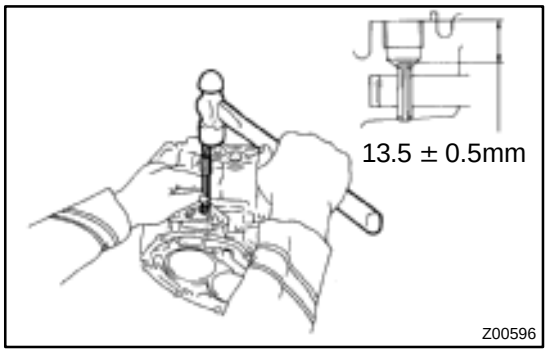

6. IF NECESSARY, REPLACE REVERSE RESTRICT PIN

(a) Using a hexagon wrench, remove the straight screw plug.
(b) Using a pin punch and hammer, drive out the slotted spring pin.
(c) Replace the reverse restrict pin.
(d) Using a pin punch and hammer, drive in the slotted spring pin.
Drive in depth:
13.5 ± 0.5 mm (0.531 ± 0.020 in.)
(e) Apply sealant to the plug threads.
Sealant:
Part No.08833 – 00080, THREE BOND 1344, LOCTITE 242 or equivalent
(f) Using a hexagon wrench, install and torque the straight screw plug.
Torque: 13 N·m (130 kgf·cm, 9 ft·lbf)

MX04I–01

REASSEMBLY

Reassembly is in the reverse order of disassembly (See page MX–11).

HINT:

Coat all of the sliding and rotating surfaces with gear oil before reassembly.

INPUT SHAFT

COMPONENTS

MX04J–01

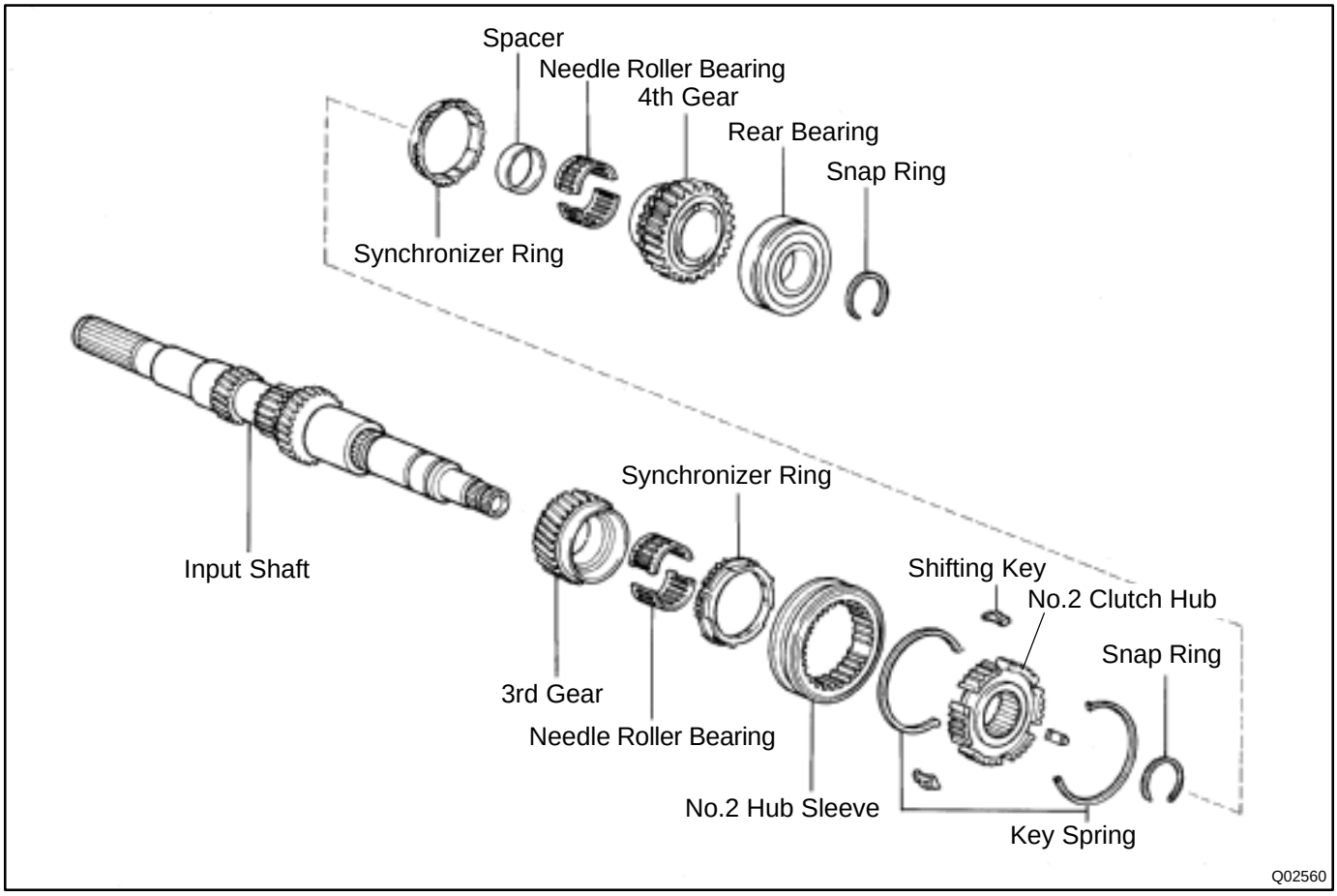

MX04K–01

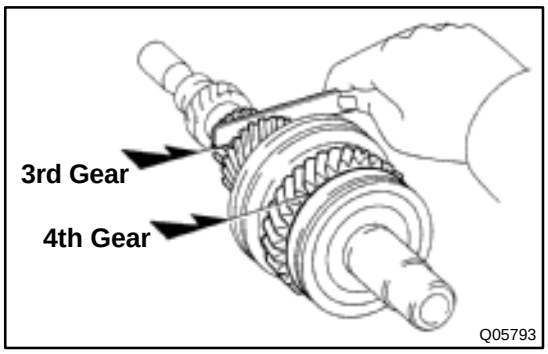

DISASSEMBLY

1. INSPECT 3RD AND 4TH GEARS THRUST CLEARANCE

Using a feeler gauge, measure the clearance.

Standard clearance:
3rd gear: 0.10 – 0.25 mm (0.0039 – 0.0098 in.)
4th gear: 0.20 – 0.45 mm (0.0079 – 0.0177 in.)
Maximum clearance:
3rd gear: 0.30 mm (0.0118 in.)
4th gear: 0.50 mm (0.0197 in.)

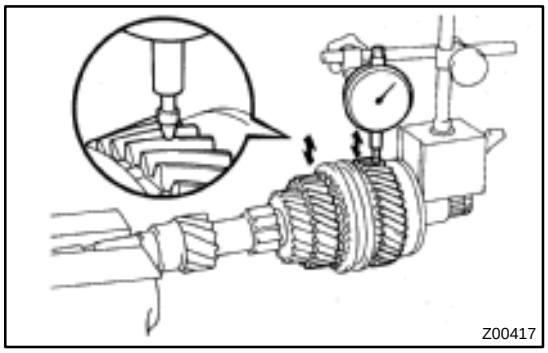

2. INSPECT 3RD AND 4TH GEARS RADIAL CLEARANCES

Using a dial indicator, measure the radial clearance between the gear and shaft.

Standard clearance:
0.009 – 0.053 mm (0.0004 – 0.0021 in.)
Maximum clearance:
0.070 mm (0.0028 in.)

If the clearance exceeds the maximum, replace the gear, needle roller bearing or shaft.

3. REMOVE SNAP RING

Using 2 screwdrivers and a hammer, tap out the snap ring.

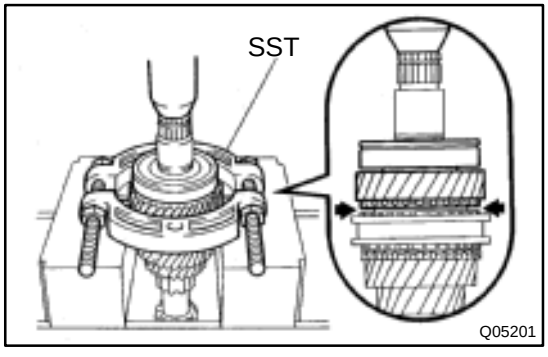

4. REMOVE REAR BEARING, 4TH GEAR, NEEDLE ROLLER BEARING, SPACER AND SYNCHRONIZER RING FROM INPUT SHAFT

(a) Using SST and a press, remove the 4th gear and rear bearing.
SST 09950–00020

(b) Remove the needle roller bearings, spacer and synchronizer ring.

5. REMOVE SNAP RING

Using a snap ring expander, remove the snap ring.

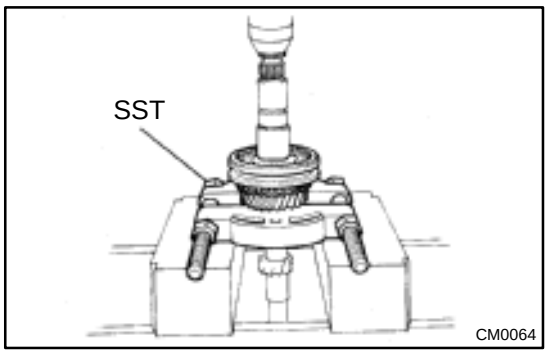

6. REMOVE NO.2 HUB SLEEVE ASSEMBLY, 3RD GEAR SYNCHRONIZER RING AND NEEDLE ROLLER BEARING

Using SST and a press, remove the No.2 hub sleeve, 3rd gear, synchronizer ring and needle roller bearings.

SST 09950–00020

NOTICE:

Be careful not to mistake the 3rd gear synchronizer ring for the 4th gear synchronizer ring.

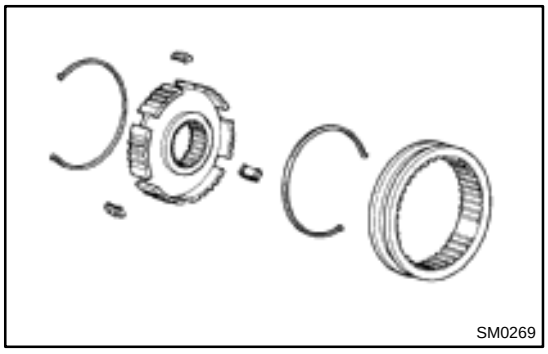

7. REMOVE NO.2 HUB SLEEVE, SHIFTING KEY AND SPRING FROM NO.2 CLUTCH HUB

Using a screwdriver, remove the 3 shifting keys and 2 springs from the No.2 clutch hub.

MX04L–01

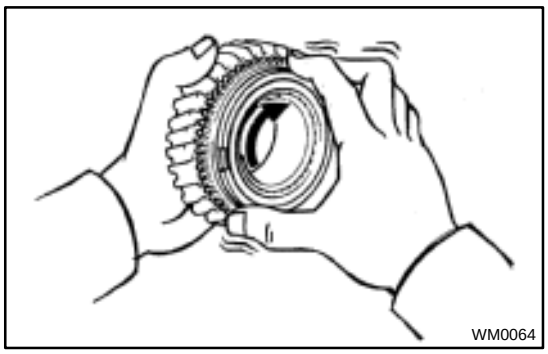
WM0064

INSPECTION

1. INSPECT SYNCHRONIZER RING

(a) Check for wear or damage.

(b) Check the braking effect of the synchronizer ring. Turn the synchronizer ring in one direction while pushing it to the gear cone. Check that the ring locks.

If the braking effect is insufficient, apply a small amount of the fine lapping compound between the synchronizer ring and gear cone. Lightly rub the synchronizer ring and gear cone together.

NOTICE:

Ensure the fine lapping compound is completely washed off after rubbing.

(c) Check again the braking effect of the synchronizer ring.

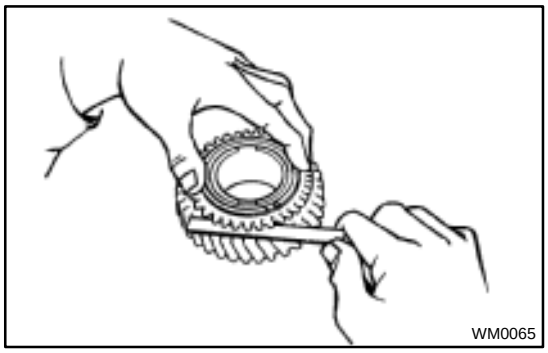
WM0065

(d) Using a feeler gauge, measure the clearance between the synchronizer ring back and gear spline end.

Minimum clearance:
0.6 mm (0.024 in.)

If the clearance is less than the minimum, replace the synchronizer ring, and apply a small amount of the fine lapping compound on gear cone.

NOTICE:

Ensure the fine lapping compound is completely washed off after rubbing.

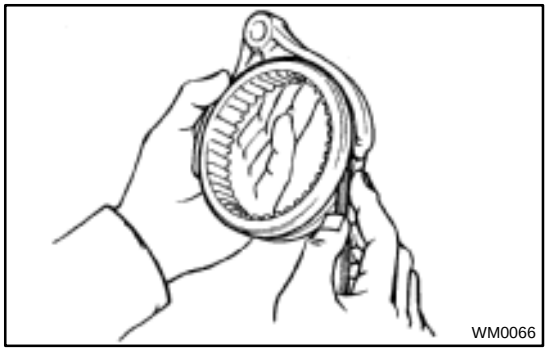
WM0066

2. INSPECT NO.2 SHIFT FORK AND HUB SLEEVE CLEARANCE

Using a feeler gauge, measure the clearance between the hub sleeve and shift fork.

Maximum clearance:
1.0 mm (0.039 in.)

If the clearance exceeds the maximum, replace shift fork or hub sleeve.

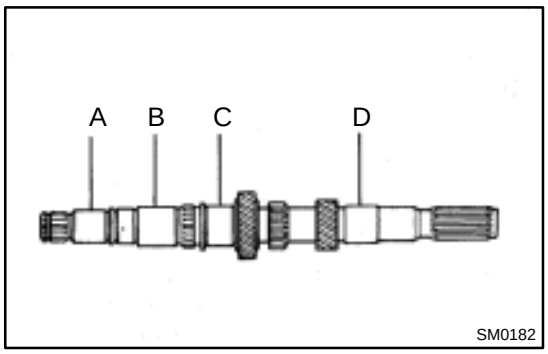

3. INSPECT INPUT SHAFT

(a) Check the input shaft for wear or damage.

(b) Using a micrometer, measure the outer diameter of the input shaft journal surface.

Minimum outer diameter:
Part A: 26.970 mm (1.0618 in.)
Part B: 32.470 mm (1.2783 in.)
Part C: 33.090 mm (1.3028 in.)
Part D: 29.970 mm (1.1799 in.)

If the outer diameter is less than the minimum, replace the input shaft.

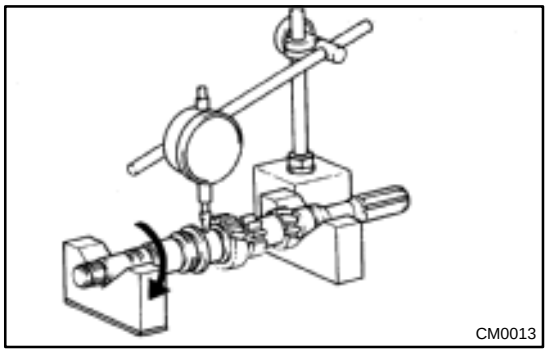

(c) Using a dial indicator, check the shaft runout.

Maximum runout:
0.05 mm (0.0020 in.)

If the runout exceeds the maximum, replace the input shaft.

MX04M–01

REASSEMBLY

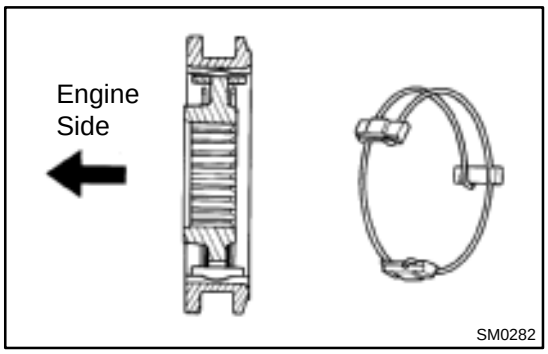

HINT:

Coat all of the sliding and rotating surfaces with gear oil before reassembly.

1. INSTALL NO.2 CLUTCH HUB INTO HUB SLEEVE

(a) Install the clutch hub and shifting keys to the hub sleeve.

(b) Install the shifting key springs under the shifting keys.

NOTICE:

Position the key springs so that their end gaps are not aligned.

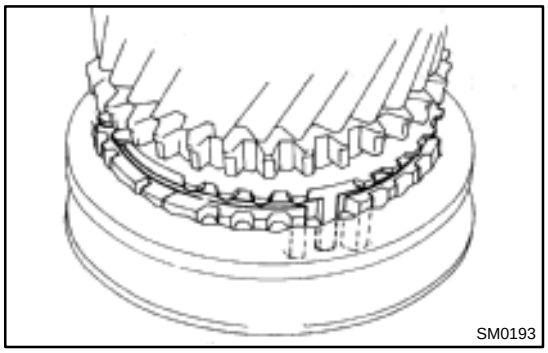

2. INSTALL 3RD GEAR, NEEDLE ROLLER BEARING, SYNCHRONIZER RING AND NO.2 HUB SLEEVE ASSEMBLY TO INPUT SHAFT

(a) Apply gear oil to the needle roller bearings.

(b) Place the synchronizer ring (for the 3rd gear) on the gear and align the ring slots with the shifting keys.

NOTICE:

Do not install the synchronizer ring for 4th gear.

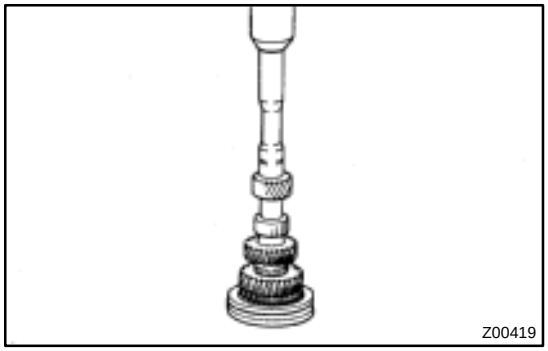

(c) Using a press, install the 3rd gear and No.2 hub sleeve.

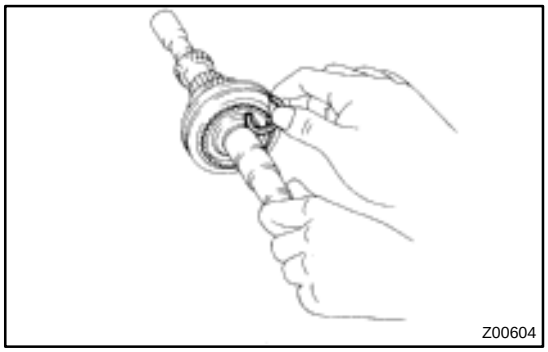

3. INSTALL SNAP RING

(a) Select a snap ring that allows the minimum axial play.

Mark	Thickness mm (in.)
1	1.95–2.00 (0.0768–0.0787)
2	2.00–2.05 (0.0787–0.0807)
3	2.05–2.10 (0.0807–0.0827)
4	2.10–2.15 (0.0827–0.0846)
5	2.15–2.20 (0.0846–0.0866)
6	2.20–2.25 (0.0866–0.0886)

(b) Using a snap ring expander, install the snap ring.

4. INSPECT 3RD GEAR THRUST CLEARANCE
(See page MX–20)


SM0189

5. INSTALL SYNCHRONIZER RING, NEEDLE ROLLER BEARING, SPACER, 4TH GEAR AND REAR BALL BEARING

(a) Apply gear oil to the needle roller bearings.

(b) Install the spacer and needle roller bearings.

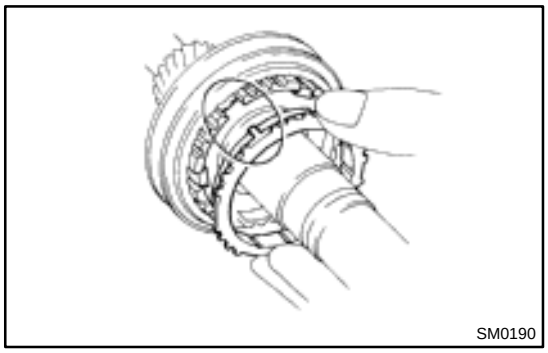
SM0190

(c) Place the synchronizer ring on the gear.

HINT:

Align the ring slots with the shifting keys and the ring projections with the hub slots.

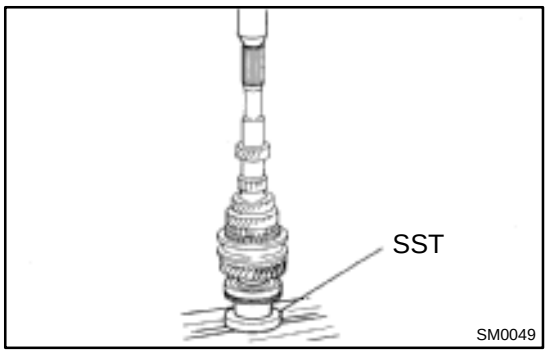

SM0049

(d) Using SST and a press, install the rear ball bearing.
SST 09608–00071

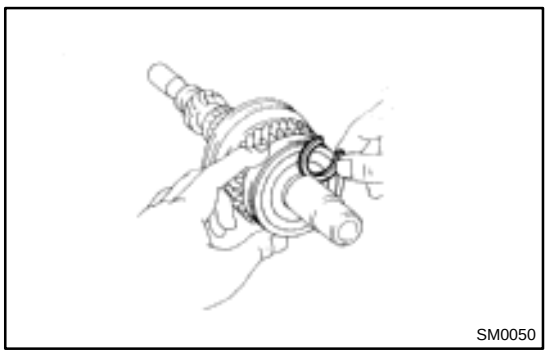
SM0050

6. INSTALL SNAP RING

(a) Select a snap ring that allows the minimum axial play.

Mark	Thickness mm (in.)
A	2.15–2.20 (0.0846–0.0866)
B	2.20–2.25 (0.0866–0.0886)
C	2.25–2.30 (0.0886–0.0906)
D	2.30–2.35 (0.0906–0.0925)
E	2.35–2.40 (0.0925–0.0945)

(b) Using a screwdriver and hammer, tap in the snap ring.

7. INSPECT 4TH GEAR THRUST CLEARANCE
(See page MX–20)

OUTPUT SHAFT

COMPONENTS

MX04N–01

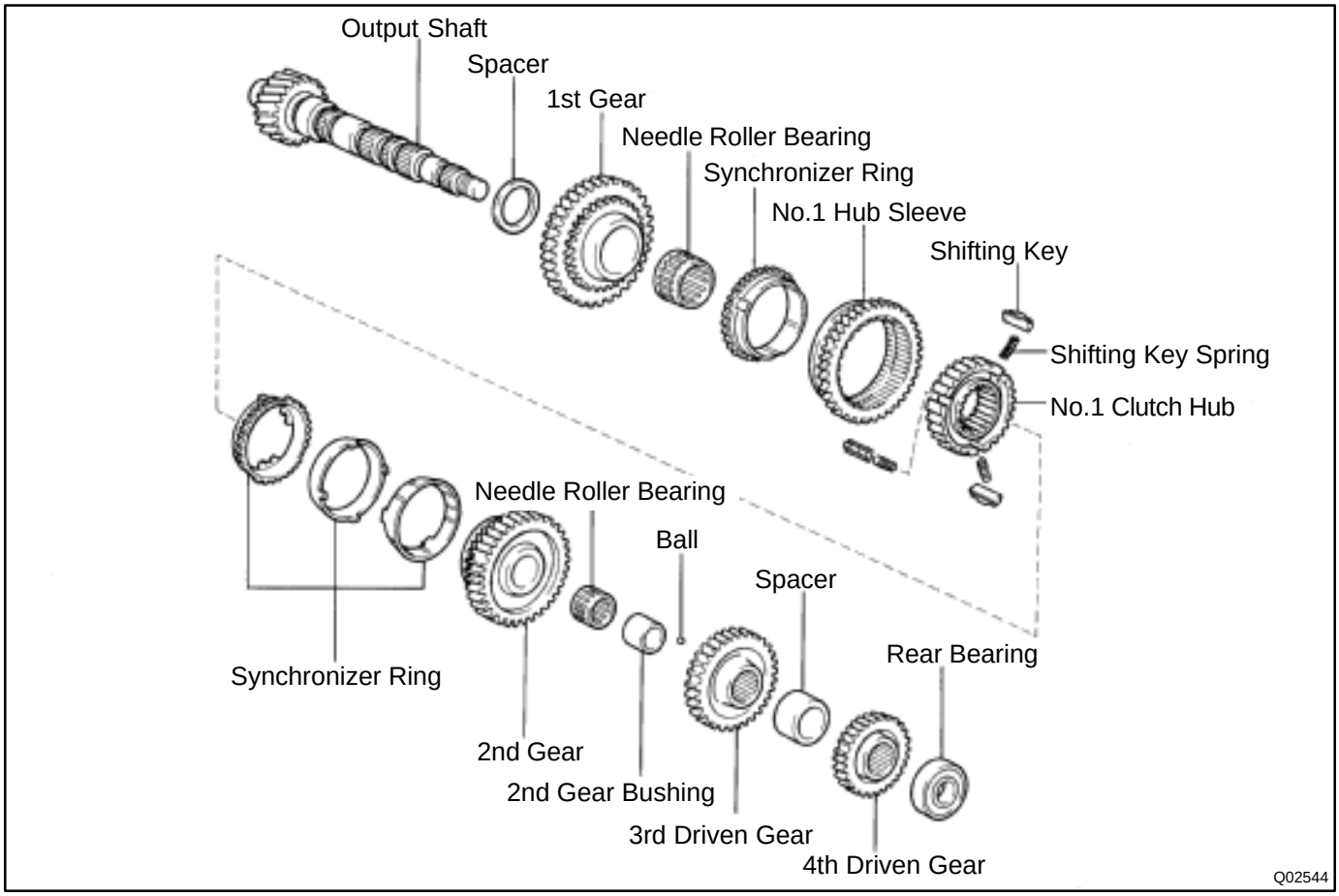

MX04O–01

DISASSEMBLY

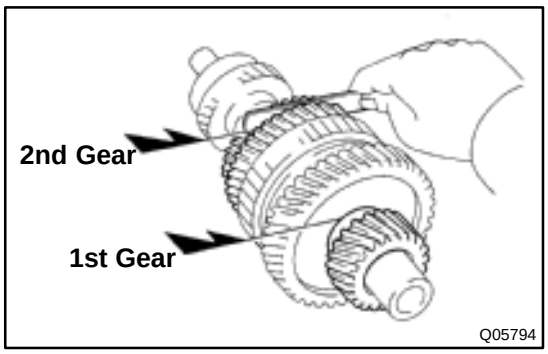

1. INSPECT 1ST AND 2ND GEARS THRUST CLEARANCE

Using a feeler gauge, measure the thrust clearance.

Standard clearance:
1st gear: 0.10 – 0.29 mm (0.0039 – 0.0114 in.)
2nd gear: 0.20 – 0.44 mm (0.0079 – 0.0173 in.)
Maximum clearance:
1st gear: 0.35 mm (0.0138 in.)
2nd gear: 0.50 mm (0.0197 in.)

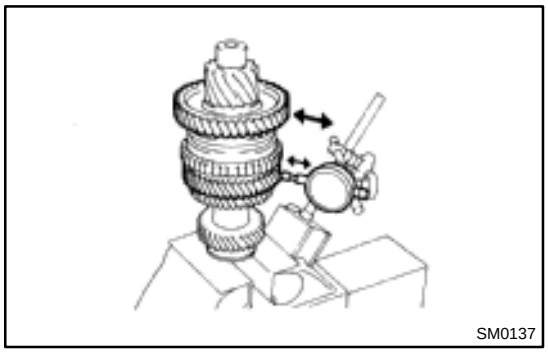

2. INSPECT 1ST AND 2ND GEARS RADIAL CLEARANCE

Using a dial indicator, measure the radial clearance between the gear and shaft.

Standard clearance:
0.009 – 0.053 mm (0.0004 – 0.0021 in.)
Maximum clearance:
0.070 mm (0.0028 in.)

If the clearance exceeds the maximum, replace the gear, needle roller bearing or shaft.

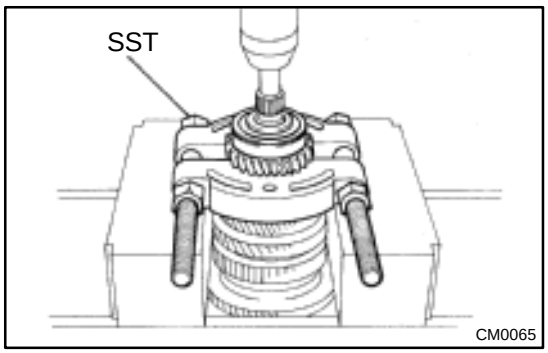

3. REMOVE REAR BALL BEARING, 4TH DRIVEN GEAR AND OUTPUT GEAR SPACER

(a) Using SST and a press, remove the rear ball bearing and 4th driven gear.
SST 09950–00020

(b) Remove the output gear spacer and ball.

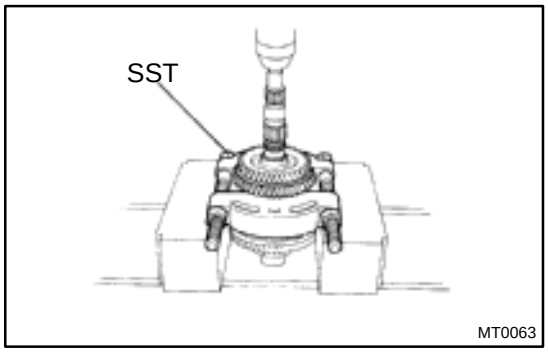

4. REMOVE 3RD DRIVEN GEAR, 2ND GEAR, NEEDLE ROLLER BEARING AND SYNCHRONIZER RING

(a) Shift the No.1 hub sleeve into the 1st gear.

(b) Using SST and a press, remove the 3rd driven gear and 2nd gear.
SST 09950–00020

(c) Remove the needle roller bearing and synchronizer rings.

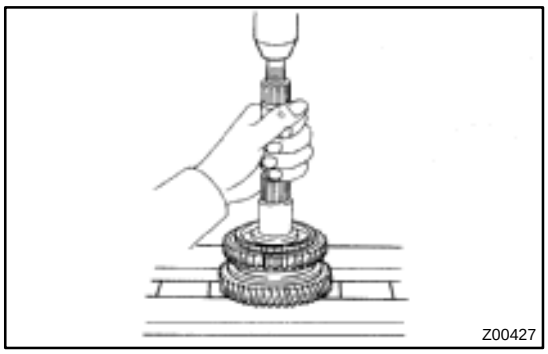

5. REMOVE NO.1 HUB SLEEVE ASSEMBLY, 1ST GEAR, SYNCHRONIZER RING, NEEDLE ROLLER BEARING, THRUST WASHER AND LOCKING BALL

(a) Using a press, remove the No.1 hub sleeve, 1st gear and synchronizer ring.
(b) Remove the needle roller bearing and locking ball.
(c) Using a screwdriver and hammer, drive out the thrust washer.

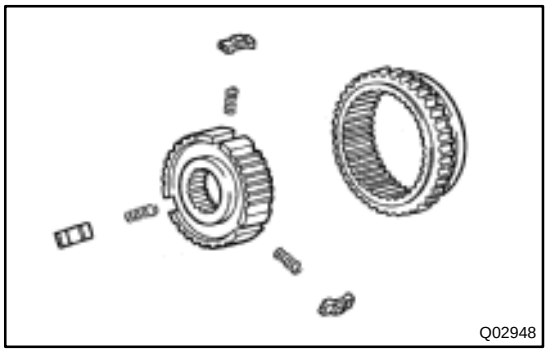

6. REMOVE NO.1 HUB SLEEVE, 3 SHIFTING KEYS AND SPRINGS FROM NO.1 CLUTCH HUB

MX04P–01

INSPECTION

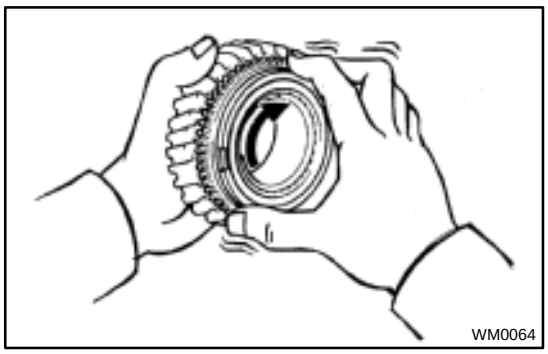
WM0064

1. INSPECT 1ST GEAR SYNCHRONIZER RING

(a) Check for wear or damage.

(b) Check the braking effect of the synchronizer ring. Turn the synchronizer ring in one direction while pushing it to the gear cone. Check that the ring locks.

If the braking effect is insufficient, apply a small amount of the fine lapping compound between the synchronizer ring and gear cone. Lightly rub the synchronizer ring and gear cone together.

NOTICE:

Ensure the fine lapping compound is completely washed off after rubbing.

(c) Check again the braking effect of the synchronizer ring.

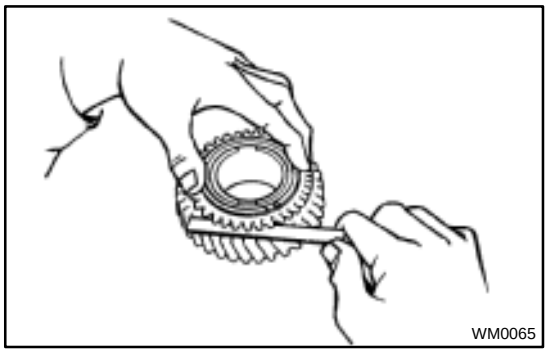
WM0065

(d) Using a feeler gauge, measure the clearance between the synchronizer ring back and the gear spline end.

Minimum clearance:
0.6 mm (0.024 in.)

If the clearance is less than the minimum, replace the synchronizer ring, and apply a small amount of the fine lapping compound on gear cone.

NOTICE:

Ensure the fine lapping compound is completely washed off after rubbing.

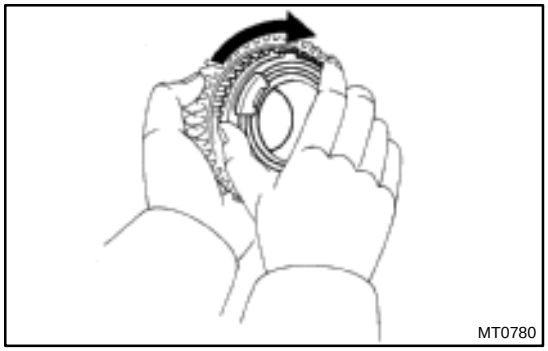
MT0780

2. INSPECT 2ND GEAR SYNCHRONIZER RING

(a) Check for wear or damage.

(b) Check the braking effect of the synchronizer ring.
Turn the synchronizer ring in one direction while pushing it to the gear cone. Check that the ring locks.

If the braking effect is insufficient, replace the synchronizer ring.

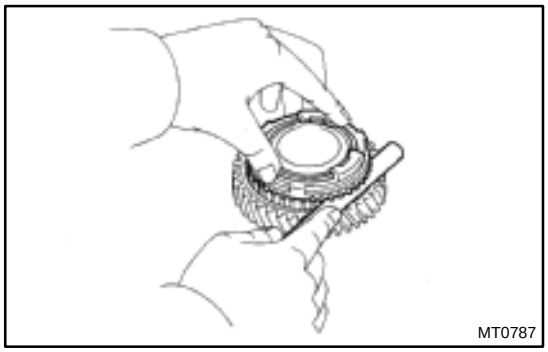
MT0787

(c) Using a feeler gauge, measure the clearance between the synchronizer ring back and gear spline end.

Minimum clearance:
0.7 mm (0.028 in.)

If the clearance is less than the minimum, replace the synchronizer ring.

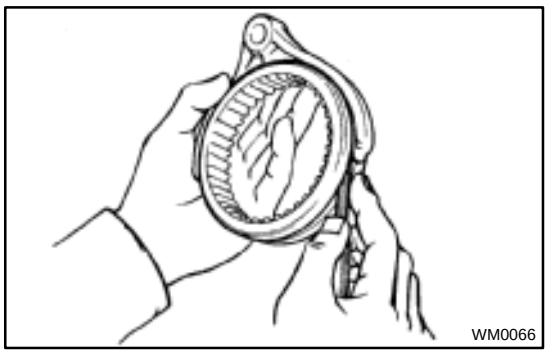
WM0066

3. INSPECT SHIFT FORK AND HUB SLEEVE CLEARANCE

Using a feeler gauge, measure the clearance between the hub sleeve and shift fork.

Maximum clearance:
1.0 mm (0.039 in.)

If the clearance exceeds the maximum, replace the shift fork or hub sleeve.

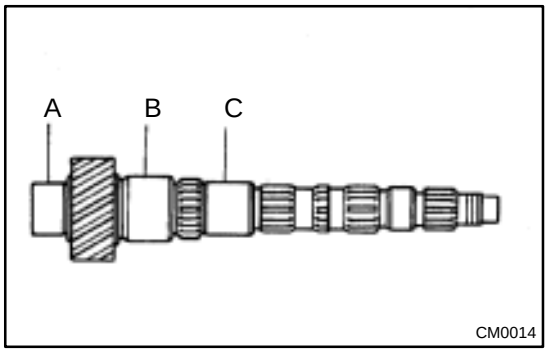

CM0014

4. INSPECT OUTPUT SHAFT

(a) Using a micrometer, measure the outer diameter of the output shaft journal surface.

Minimum outer diameter:
Part A: 31.970 mm (1.2587 in.)
Part B: 37.970 mm (1.4949 in.)
Part C: 31.990 mm (1.2594 in.)

If the outer diameter is less than the minimum, replace the output shaft.

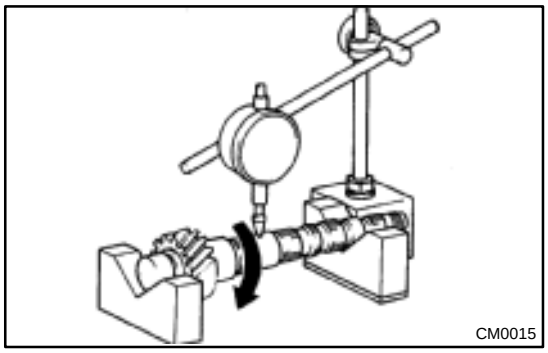
CM0015

(b) Using a dial indicator, check the shaft runout.

Maximum runout:
0.05 mm (0.0020 in.)

If the runout exceeds the maximum, replace the output shaft.

MX04Q–01

REASSEMBLY

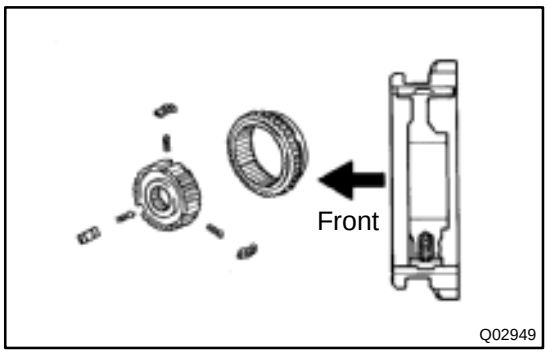

HINT:

Coat all of the sliding and rotating surfaces with gear oil before reassembly.

1. INSTALL NO.1 CLUTCH HUB INTO HUB SLEEVE

(a) Install the 3 springs and shifting keys to the clutch hub.

(b) Install the hub sleeve to the clutch hub.

HINT:

Position the identification groove of the hub sleeve to the front of the transmission.

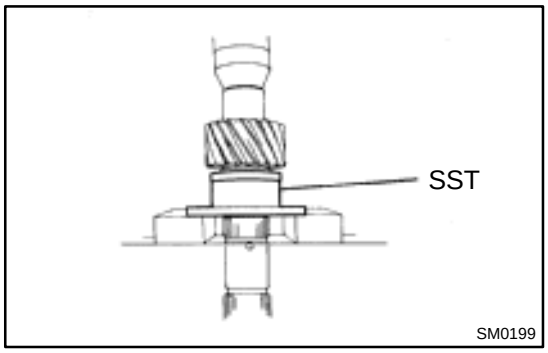

2. INSTALL THRUST WASHER, 1ST GEAR, NEEDLE ROLLER BEARING, SYNCHRONIZER RING AND NO.1 HUB SLEEVE TO OUTPUT SHAFT

(a) Using SST and a press, install the thrust washer.

SST 09316–60011 (09316–00041)

(b) Apply gear oil to the needle roller bearing.

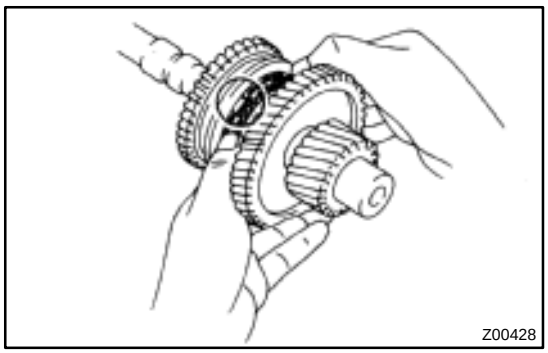

(c) Place the synchronizer ring on the gear and align the ring slots with the shifting keys.

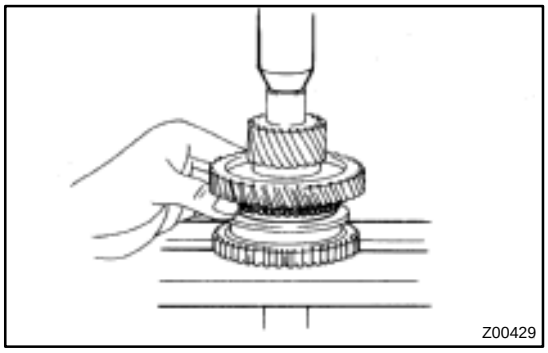

(d) Using a press, install the 1st gear and No.1 hub sleeve.

3. INSPECT 1ST GEAR THRUST CLEARANCE
(See page MX–28)

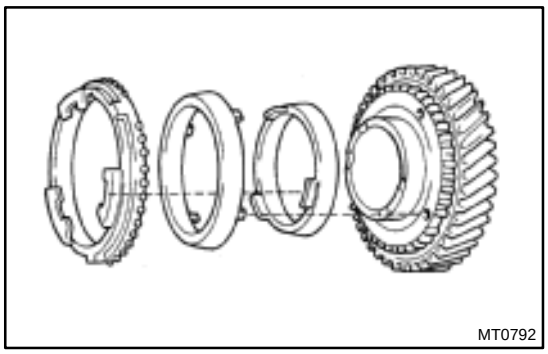
MT0792

4. INSTALL SYNCHRONIZER RING, 2ND GEAR, NEEDLE ROLLER BEARING AND 3RD DRIVEN GEAR

(a) Install the ball.
(b) Fit the 2nd gear bushing groove securely over the ball when installing the 2nd gear bushing on the shaft.
(c) Place the synchronizer rings on the 2nd gear.
(d) Apply gear oil to the needle roller bearing and install it.
(e) Install the 2nd gear.

NOTICE:
Align the clutch hub grooves with the projections on the synchronizer ring.

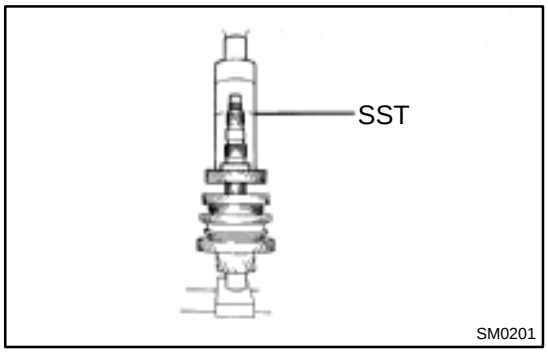

SM0201

(f) Using SST and a press, install the 3rd driven gear.
SST 09316–60011 (09316–00011)

5. INSPECT 2ND GEAR THRUST CLEARANCE
(See page MX–28)

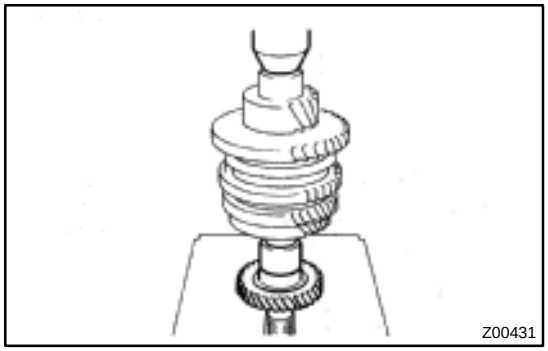
Z00431

6. INSTALL OUTPUT GEAR SPACER, 4TH DRIVEN GEAR AND RADIAL BALL BEARING

(a) Install the outer gear spacer.
(b) Using a press, install the 4th driven gear and bearing.

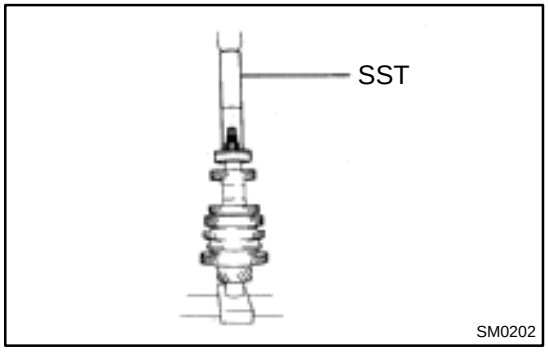

SM0202

7. INSTALL REAR BEARING

Using SST and a press, install the rear bearing.
SST 09612–22011

SHIFT AND SELECT LEVER SHAFT

MX04R–01

COMPONENTS

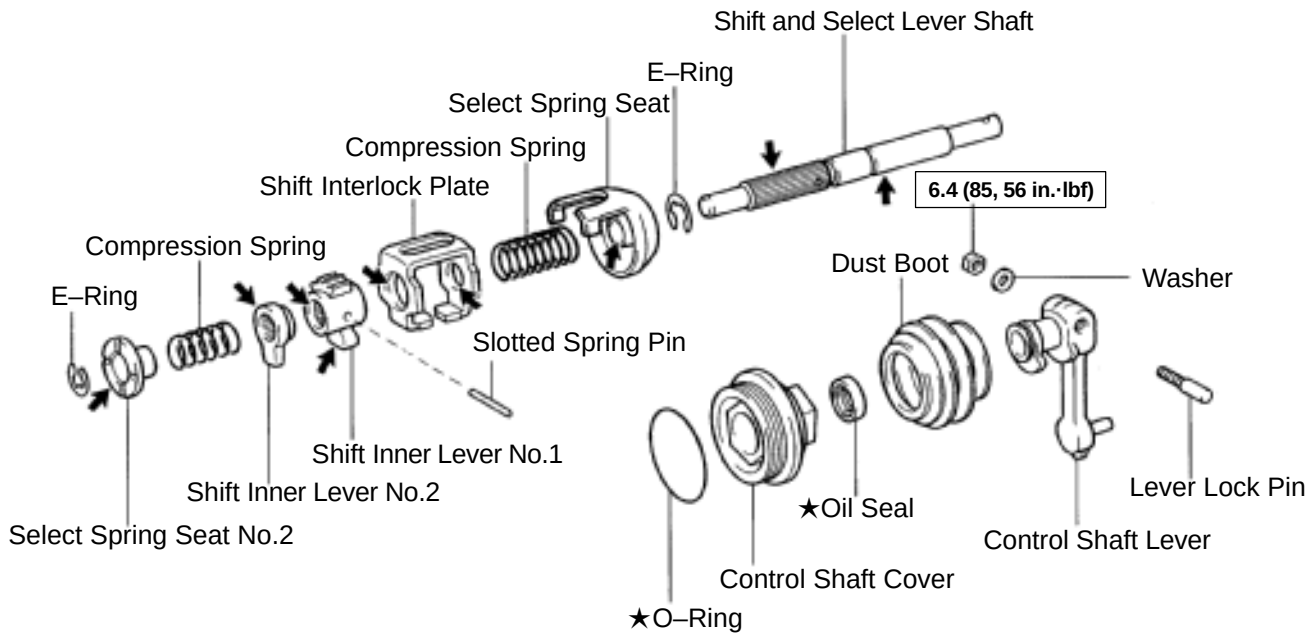

N·m (kgf·cm, ft·lbf): Specified torque
★ Non–reusable part
⬅ MP Grease

Q10277

DIFFERENTIAL CASE

COMPONENTS

MX04S–01

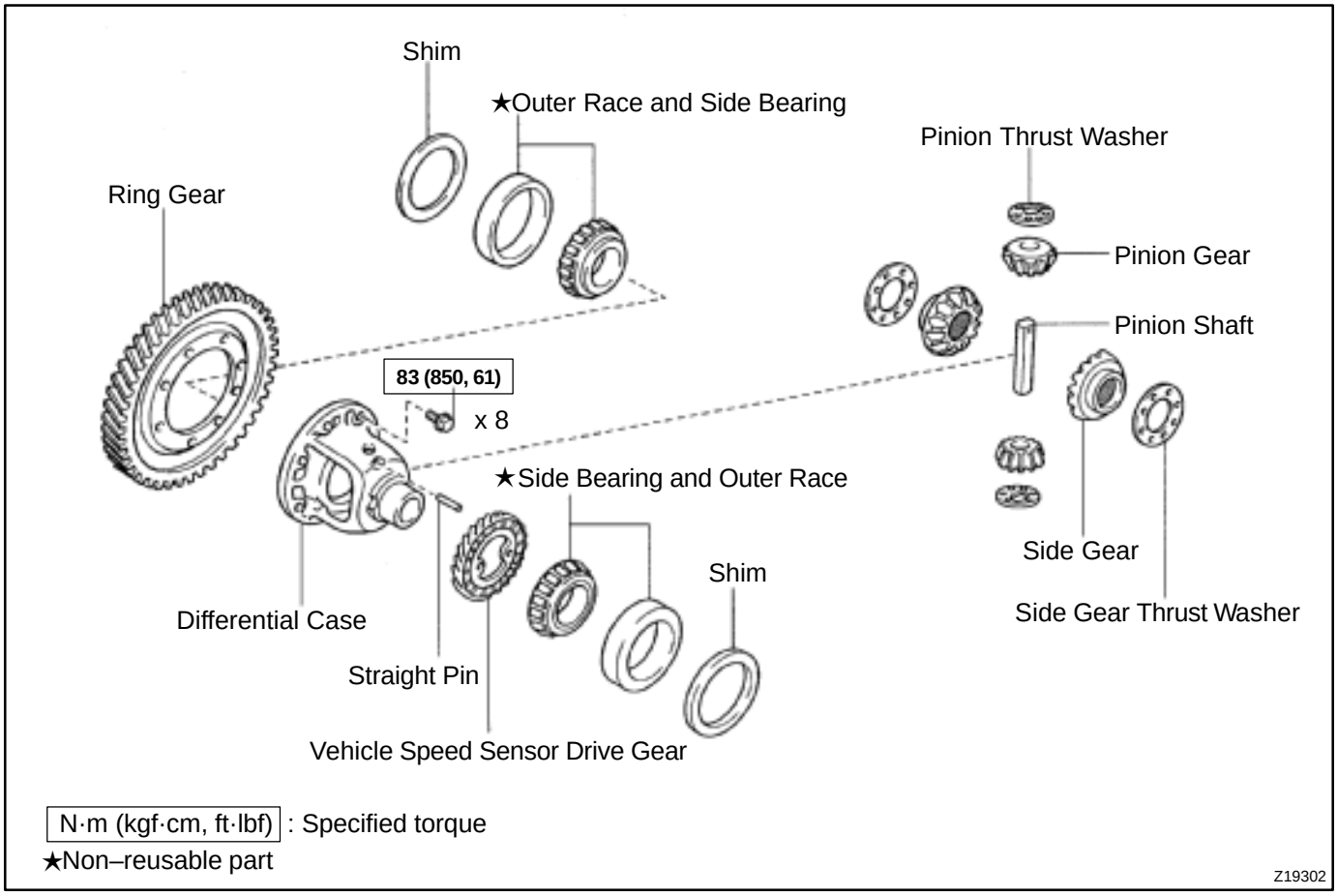

MX04T–01

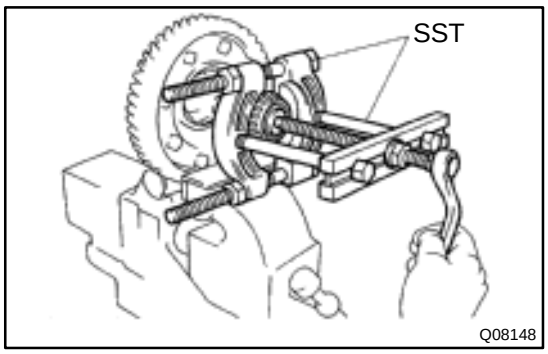

DISASSEMBLY

1. Vehicle Speed Sensor Drive Gear Side:
REMOVE SIDE BEARING FROM DIFFERENTIAL CASE

(a) Using SST, remove the bearing from the drive gear side of the case.
SST 09950–00020, 09950–00030

(b) Remove the vehicle speed sensor drive gear.

2. REMOVE RING GEAR

(a) Place matchmarks on the ring gear and case.

(b) Remove the 8 bolts.

(c) Using a copper hammer, tap on the ring gear to remove it from the case.

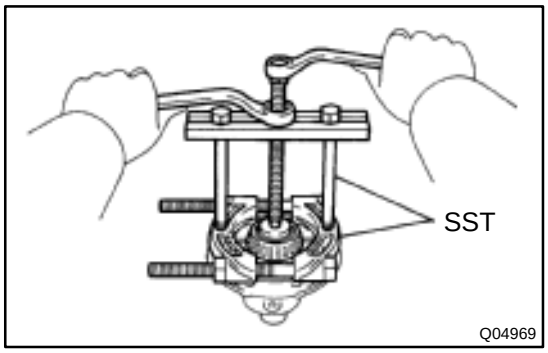

3. Ring Gear Side:
REMOVE SIDE BEARING FROM DIFFERENTIAL CASE

Using SST, remove the bearing from the ring gear side of the case.
SST 09950–00020, 09950–00030

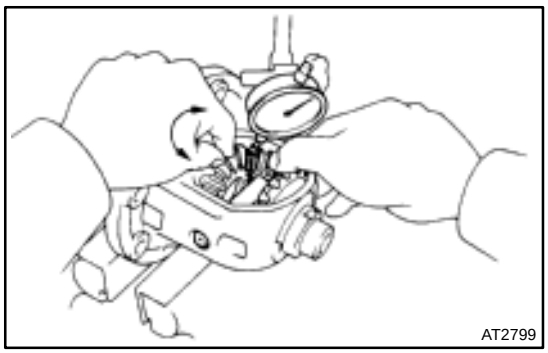

4. INSPECT SIDE GEAR BACKLASH

Using a dial indicator, measure the backlash of one side gear while holding one pinion toward the case.

Standard backlash:
0.05 – 0.20 mm (0.0020 – 0.0079 in.)

If the backlash is not within the specification, install the correct thrust washer to the side gears.

5. DISASSEMBLE DIFFERENTIAL CASE

(a) Using a pin punch and hammer, drive out the straight pin.

(b) Remove the pinion shaft from the case.

(c) Remove the 2 pinions and side gears with the 4 thrust washers from each gear.

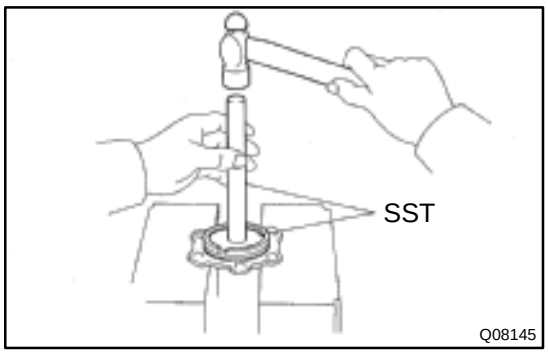

6. Transaxle Case Side:
IF NECESSARY, REPLACE DIFFERENTIAL SIDE BEARING RETAINER OIL SEAL

(a) Using SST and a hammer, drive out the oil seal from the retainer.
SST 09950–60020 (09951–00680), 09950–70010 (09951–07150)

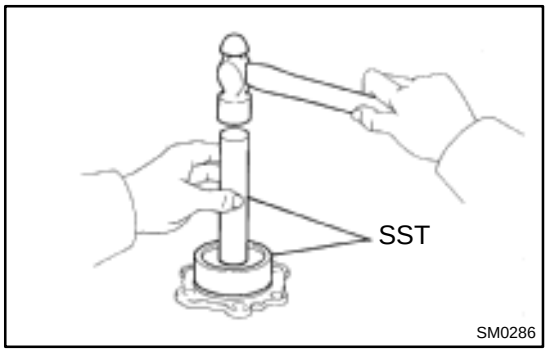

(b) Using SST and a hammer, drive in a new oil seal until its surface is flush with the case surface.
SST 09350–32014 (09351–32130, 09351–32150)

(c) Coat the lip of the oil seal with MP grease.

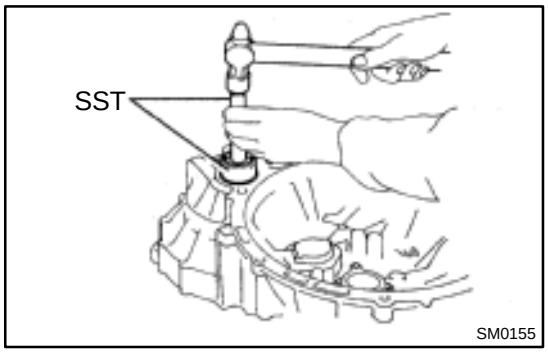

7. Transmission Case Side:
IF NECESSARY, REPLACE SIDE OIL SEAL

(a) Using a screwdriver and hammer, drive out the oil seal.

(b) Using SST and a hammer, drive in a new oil seal until its surface is flush with the case surface.
SST 09350–32014 (09351–32130, 09351–32150)

(c) Coat the lip of the oil seal with MP grease.

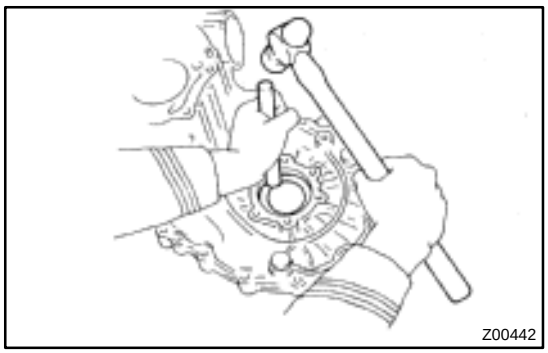

8. Transaxle Case Side:
IF NECESSARY, REPLACE SIDE BEARING OUTER RACE

(a) Using a brass bar and hammer, drive out the bearing outer race.

(b) Install the bearing retainer without an O–ring.

(c) Install and torque the 6 bolts.
Torque: 18 N·m (185 kgf·cm, 13 ft·lbf)

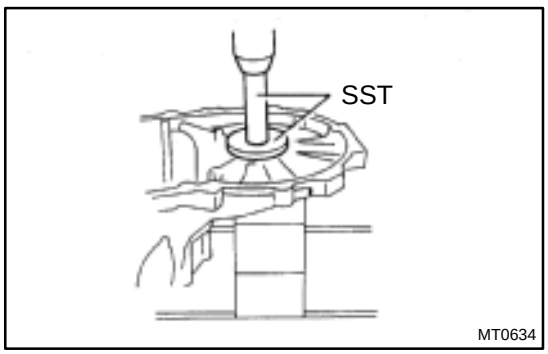

(d) Place the thinnest shim into the case.

(e) Using SST and a press, install a new bearing outer race.
SST 09950–60020 (09951–00680), 09950–70010 (09951–07150)

(f) Remove the 6 bolts.

(g) Remove the bearing retainer and shim.

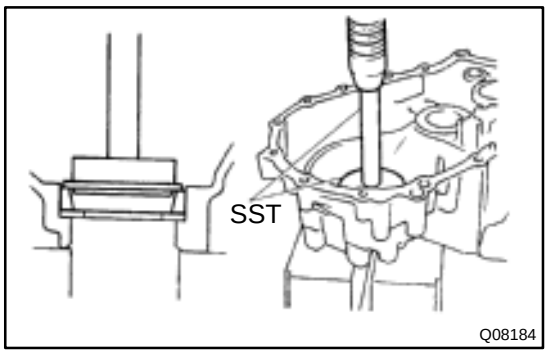

9. Transaxle Case Side:
IF NECESSARY, REPLACE SIDE BEARING OUTER RACE

(a) Using a brass bar and hammer, drive out the bearing outer race and shim.

(b) Place the shim into the case.

(c) Using SST and a press, install a new bearing outer race.
SST 09950–60020 (09951–00680), 09950–70010 (09951–07150)

MX04U–01

REASSEMBLY

1. ASSEMBLE DIFFERENTIAL CASE

(a) Install the correct thrust washers and side gears. Refer to the table below, select thrust washers which will ensure that the backlash is within the specification. Try to select washers of the same size for both sides.

Standard backlash:
0.05 – 0.20 mm (0.0020 – 0.0079 in.)

Thickness mm (in.)	Thickness mm (in.)
0.95 (0.0374)	1.10 (0.0433)
1.00 (0.0394)	1.15 (0.0453)
1.05 (0.0413)	1.20 (0.0472)

Install the thrust washers and side gears in the differential case.

(b) Install the pinion shaft.

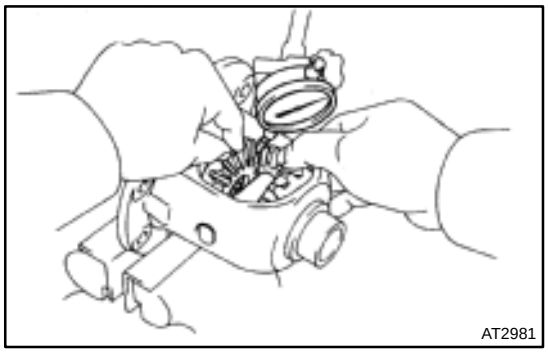
AT2981

(c) Inspect the side gear backlash.
Using a dial indicator, measure the side gear backlash while holding one pinion gear toward the case.
Standard backlash:
0.05 – 0.20 mm (0.0020 – 0.0079 in.)

If the backlash is not within the specification, install a thrust washer of different thickness.

(d) Using a pin punch and hammer, drive in the straight pin through the case and hole in the pinion shaft.

(e) Stake the differential case.

2. INSTALL RING GEAR ON DIFFERENTIAL CASE

(a) Clean the contact surface of the differential case and the threads of the ring gear and differential case.

(b) Heat the ring gear in boiling water.

(c) Carefully take the ring gear out of the water.

(d) After moisture on the ring gear has completely evaporated, quickly install the ring gear to the differential case.

HINT:
Align the matchmarks on the differential case and the ring gear.

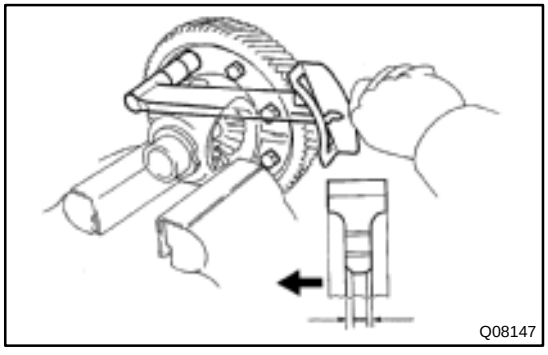
Q08147

(e) Temporarily install the 8 bolts.

NOTICE:
The ring gear set bolts should not be torqued until the ring gear has cooled sufficiently.

(f) After the ring gear has cooled sufficiently, torque the ring gear set bolts.
Torque: 83 N·m (850 kgf·cm, 61 ft·lbf)

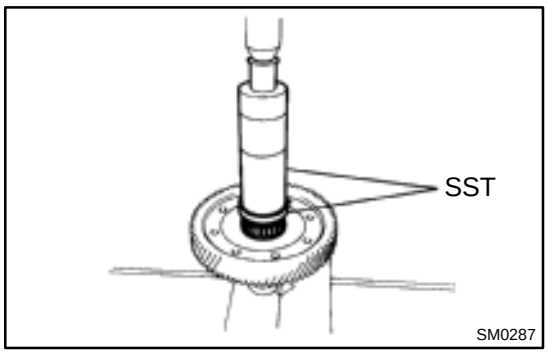

3. INSTALL SIDE BEARING TO DIFFERENTIAL CASE

(a) Using SST and a press, install a new side bearing to the transmission case side.
SST 09316–60011 (09316–00011), 09350–32014 (09351–32120)

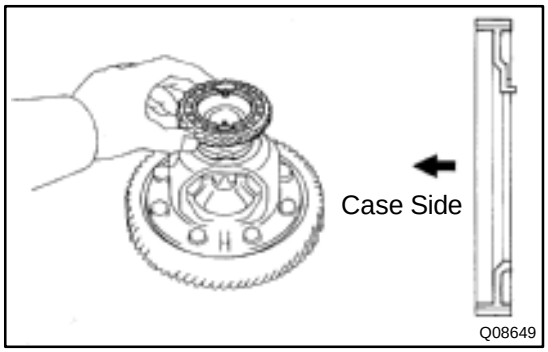

(b) Install the vehicle speed sensor drive gear to the transaxle case side.

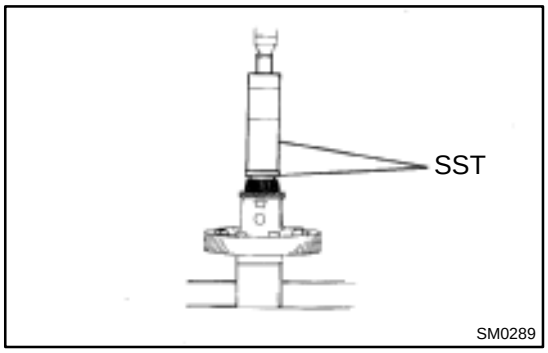

(c) Using SST and a press, install a new side bearing to the transaxle case side.
SST 09316–60011 (09316–00011), 09350–32014 (09351–32120)

NOTICE:
Install the black cage bearing on the vehicle speed sensor drive gear side.

4. ADJUST DIFFERENTIAL CASE SIDE BEARING PRELOAD

(a) Install the differential to the transaxle case.
(b) Install the transmission case.
(c) Install and torque the case bolts.
Torque: 29 N·m (300 kgf·cm, 22 ft·lbf)
(d) Install the shim into the transmission case.
(e) Install the bearing retainer without an O–ring.
(f) Install and torque the 6 bolts.
Torque: 18 N·m (185 kgf·cm, 13 ft·lbf)

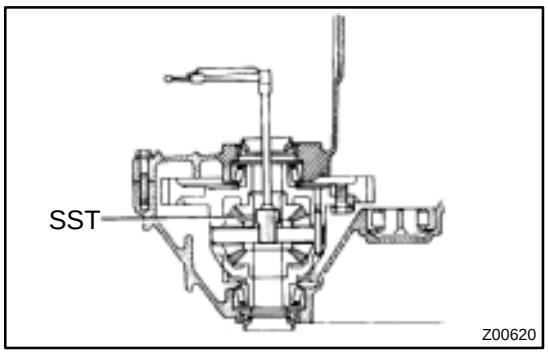

(g) Using SST and a torque wrench, measure the preload.
SST 09564–32011
Preload (at starting):
0.8 – 1.6 N·m (8 – 16 kgf·cm, 6.9 – 13.9 in.·lbf)

If the preload is not within the specification, remove the transmission case side bearing retainer. Select another shim.
HINT:
The preload will change about 0.3 – 0.4 N·m (3 – 4 kgf·cm, 2.6 – 3.5 in.·lbf) with each 0.05 mm (0.0019 in.) change in shim thickness.

Mark	Thickness mm (in.)	Mark	Thickness mm (in.)
1	1.90 (0.0748)	11	2.40 (0.0945)
2	1.95 (0.0768)	12	2.45 (0.0965)
3	2.00 (0.0787)	13	2.50 (0.0984)
4	2.05 (0.0807)	14	2.55 (0.1004)
5	2.10 (0.0827)	15	2.60 (0.1024)
6	2.15 (0.0846)	16	2.65 (0.1043)
7	2.20 (0.0866)	17	2.70 (0.1063)
8	2.25 (0.0886)	18	2.75 (0.1083)
9	2.30 (0.0906)	19	2.80 (0.1102)
10	2.35 (0.0925)	–	–

(h) Remove the 6 bolts.
(i) Remove the bearing retainer and shim.
(j) Remove the 17 bolts.
(k) Remove the transmission case.

SHIFT LEVER AND CONTROL CABLE

MX04V–02

COMPONENTS

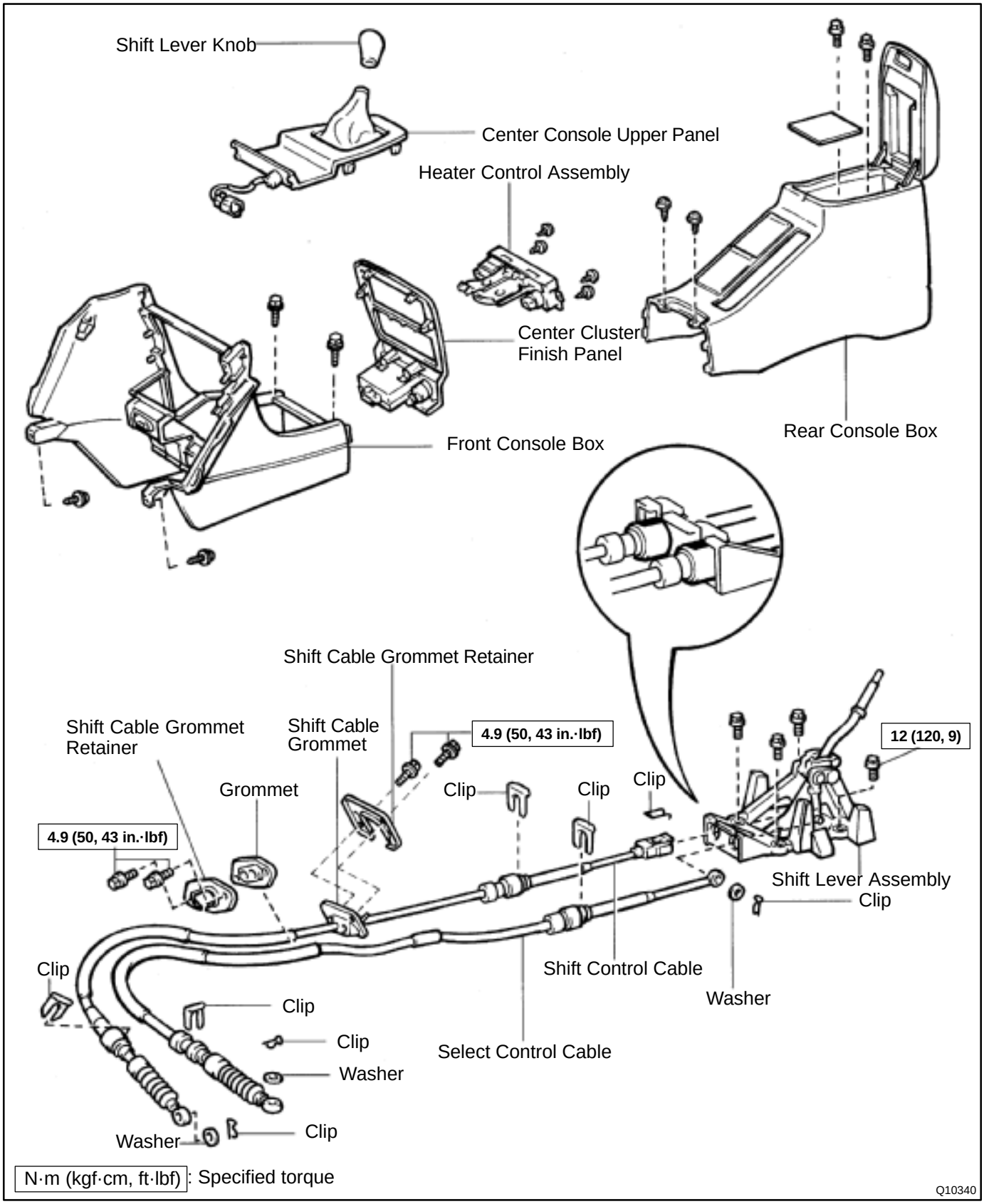

MANUAL TRANSAXLE SYSTEM

MX04X–01

PRECAUTION

When working with FIPG material, you must observe the following items.

- ★ **Using a razor blade and gasket scraper, remove all the old FIPG material from the gasket surfaces.**
- ★ **Thoroughly clean all components to remove all the loose material.**
- ★ **Clean both sealing surfaces with a non–residue solvent.**
- ★ **Apply FIPG in an approx. 1 mm (0.04 in.) wide bead along the sealing surface.**
- ★ **Parts must be assembled within 10 minutes of application. Otherwise, the FIPG material must be removed and reapplied.**

TROUBLESHOOTING

MX04Y–01

PROBLEM SYMPTOMS TABLE

Use the table below to help you find the cause of the problem. The numbers indicate the priority of the likely cause of the problem. Check each part in order. If necessary, replace parts.

Symptom	Suspect Area	See page
Noise	1. Oil (Level low)	MX–4
	2. Oil (Wrong)	MX–4
	3. Gear (Worn or damaged)	MX–10
	4. Bearing (Worn or damaged)	MX–10
Oil leakage	1. Oil (Level too high)	MX–4
	2. Gasket (Damaged)	MX–10
	3. Oil seal (Worn or damaged)	MX–10
	4. O–Ring (Worn or damaged)	MX–10
Hard to shift or will not shift	1. Control cable (Faulty)	MX–49
	2. Synchronizer ring (Worn or damaged)	MX–10 MX–24 MX–31
	3. Shift key spring (Damaged)	MX–10 MX–24 MX–31
Jumps out of gear	1. Locking ball spring (Damaged)	MX–10
	2. Shift fork (Worn)	MX–10
	3. Gear (Worn or damaged)	MX–10
	4. Bearing (Worn or damaged)	MX–10

MANUAL TRANSAXLE UNIT

MX04Z–01

COMPONENTS

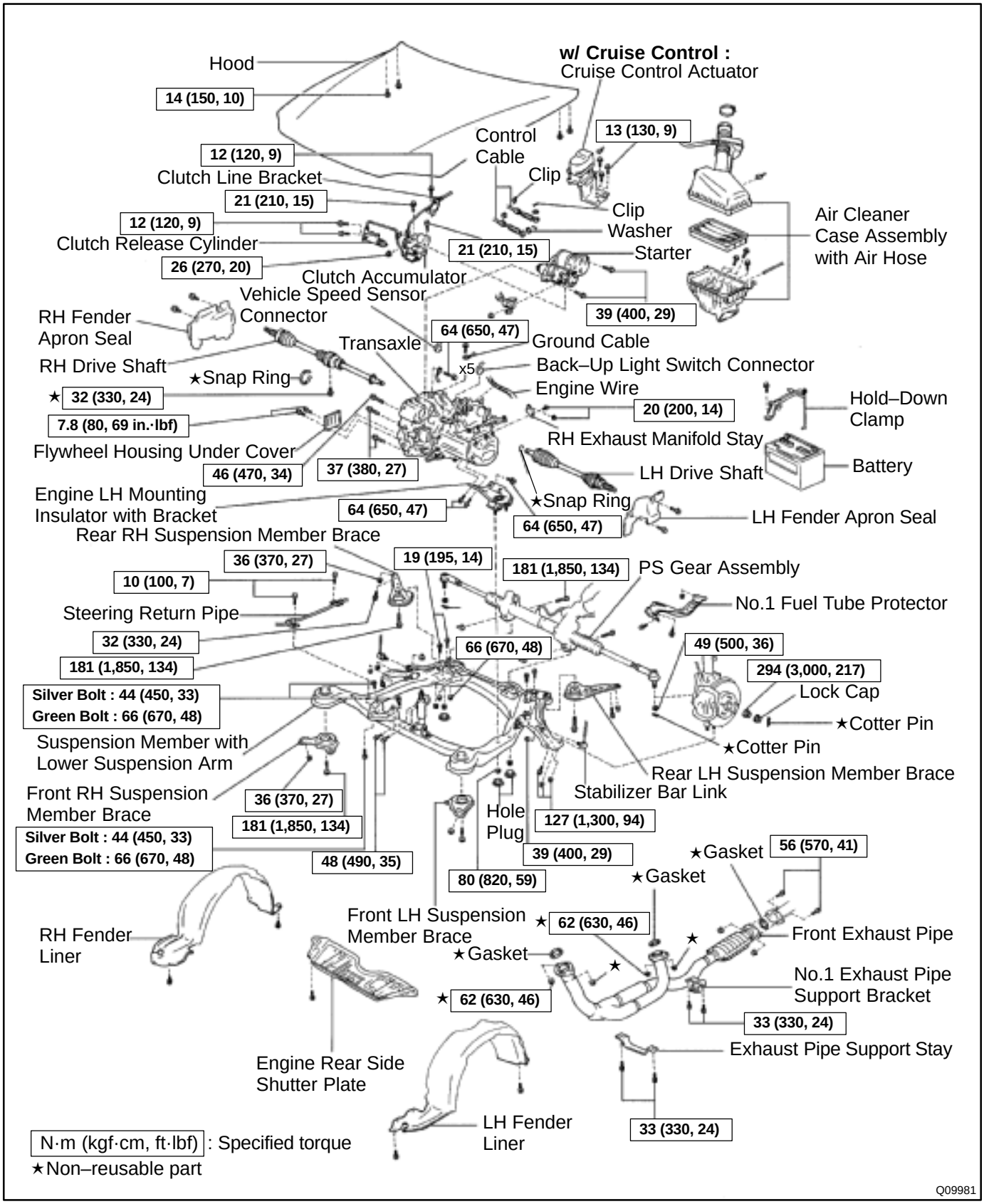

MX050–01

REMOVAL

1. REMOVE HOOD

HINT:

At the time of installation, please refer to the following item.

Adjust the hood.

(See page BO–10)

2. REMOVE BATTERY AND AIR CLEANER CASE ASSEMBLY WITH AIR HOSE

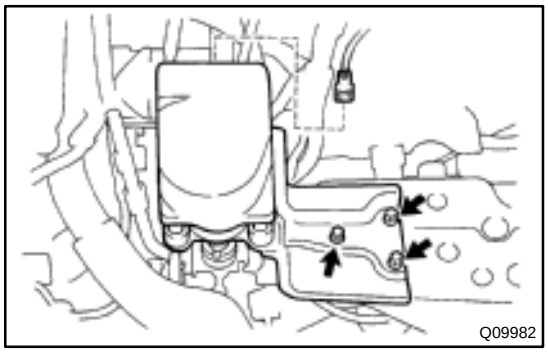
Q09982

3. w/ Cruise Control:
REMOVE CRUISE CONTROL ACTUATOR

(a) Disconnect the cruise control actuator connector.

(b) Remove the 3 bolts and cruise control actuator with the bracket.

Torque: 13 N·m (130 kgf·cm, 9 ft·lbf)

4. REMOVE STARTER

(a) Disconnect the connector and wire from the starter.

(b) Remove the 2 bolts and starter.

Torque: 39 N·m (400 kgf·cm, 29 ft·lbf)

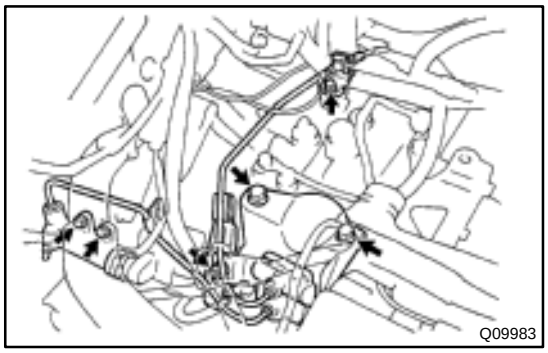
Q09983

5. DISCONNECT CLUTCH RELEASE CYLINDER

(a) Remove the 2 bolts and disconnect the release cylinder.

Torque: 12 N·m (120 kgf·cm, 9 ft·lbf)

(b) Remove the 2 set bolts and nut of the clutch accumulator.

Torque:
Bolt: 21 N·m (210 kgf·cm, 15 ft·lbf)
Nut: 26 N·m (270 kgf·cm, 20 ft·lbf)

(c) Remove the set bolt of the clutch line bracket.

Torque: 12 N·m (120 kgf·cm, 9 ft·lbf)

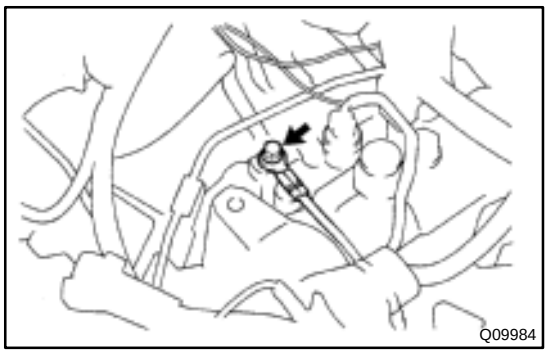
Q09984

6. DISCONNECT GROUND CABLE

Remove the set bolt of the ground cable from the transaxle.

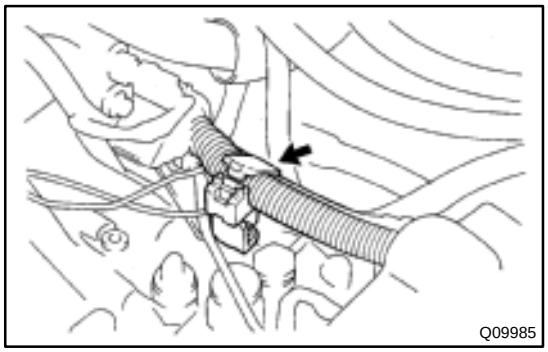
Q09985

7. DISCONNECT ENGINE WIRE FROM CLAMP

8. DISCONNECT VEHICLE SPEED SENSOR AND BACK–UP LIGHT SWITCH CONNECTORS

9. DISCONNECT CONTROL CABLE

(a) Remove the 2 clips and washers.

(b) Remove the 2 clips from the cables.



10. REMOVE 5 TRANSAXLE UPPER SIDE MOUNTING BOLTS
Torque:
17 mm head: 64 N·m (650 kgf·cm, 47 ft·lbf)

11. REMOVE FRONT WHEEL
Torque: 103 N·m (1,050 kgf·cm, 76 ft·lbf)

12. RAISE VEHICLE

NOTICE:
Make sure that the vehicle is securely supported.

13. REMOVE ENGINE REAR SIDE SHUTTER PLATE AND LH AND RH FENDER APRON SEALS

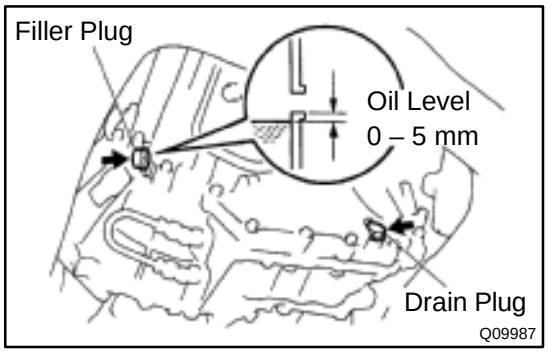

14. DRAIN TRANSAXLE OIL
Oil grade: API GL–4 or GL–5
Viscosity: SAE 75W–90
Capacity: 4.2 liters (4.4 US qts, 3.7 Imp. qts)
Torque: 49 N·m (500 kgf·cm, 36 ft·lbf)

15. REMOVE LH AND RH DRIVE SHAFTS
(See page SA–25)

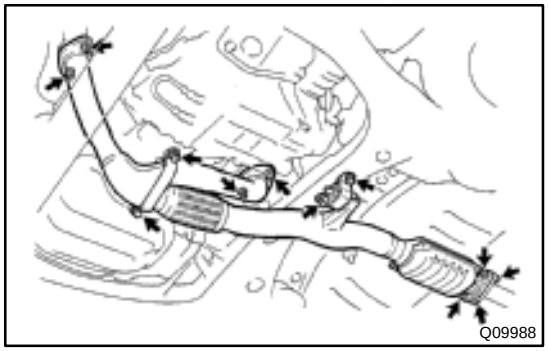

16. REMOVE FRONT EXHAUST PIPE

(a) Remove the 2 bolts and exhaust pipe support stay.
Torque: 33 N·m (330 kgf·cm, 24 ft·lbf)

(b) Remove the 4 nuts and 2 gaskets from the exhaust manifold.
Torque: 62 N·m (630 kgf·cm, 46 ft·lbf)

(c) Remove the 2 bolts, nuts and gasket.
Torque: 56 N·m (570 kgf·cm, 41 ft·lbf)

(d) Remove the 2 set bolts of the No.1 exhaust pipe support bracket.
Torque: 33 N·m (330 kgf·cm, 24 ft·lbf)

(e) Remove the front exhaust pipe.

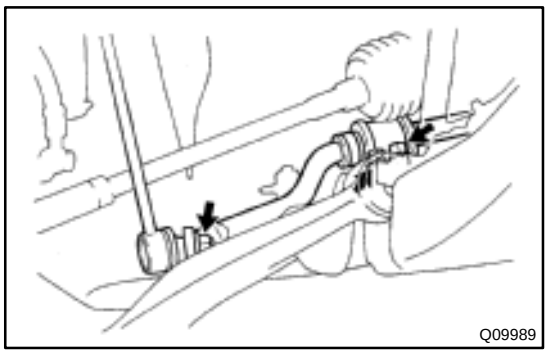

17. DISCONNECT PS GEAR ASSEMBLY FROM FRONT SUSPENSION MEMBER

(a) Remove the 2 nuts and disconnect the stabilizer bar link from the stabilizer bar.
Torque: 39 N·m (400 kgf·cm, 29 ft·lbf)

(b) Remove the 4 set bolts of the stabilizer bar bracket.
Torque: 19 N·m (195 kgf·cm, 14 ft·lbf)

(c) Remove the 2 bolts, nut and No.1 fuel tube protector.

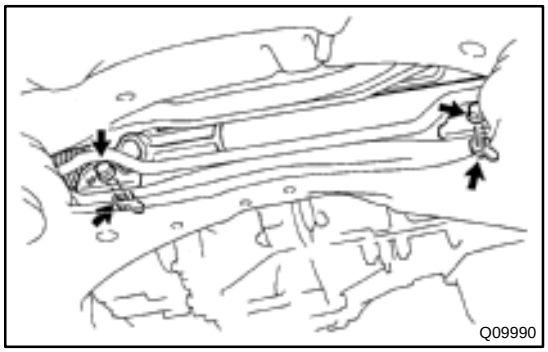

(d) Tie the PS gear assembly to the proper position with a code or an equivalent to suspend the assembly securely.

(e) Remove the 2 set bolts and nuts of the PS gear assembly.
Torque: 181 N·m (1,850 kgf·cm, 134 ft·lbf)

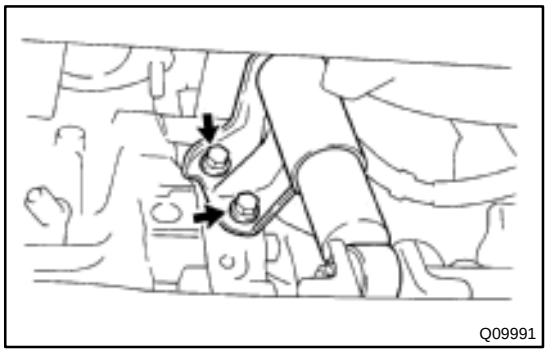

18. DISCONNECT FRONT ENGINE ABSORBER FROM TRANSAXLE

Remove the 2 bolts.
Torque: 48 N·m (490 kgf·cm, 35 ft·lbf)

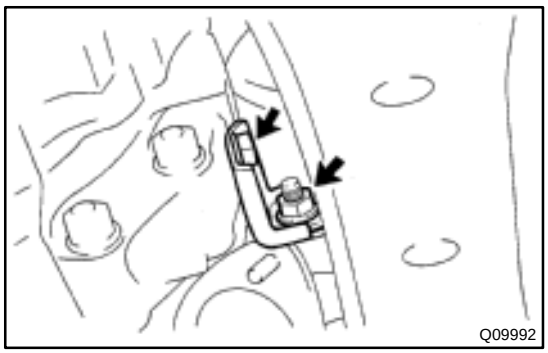

19. REMOVE RH EXHAUST MANIFOLD STAY

Remove the bolt, nut and stay.
Torque: 20 N·m (200 kgf·cm, 14 ft·lbf)

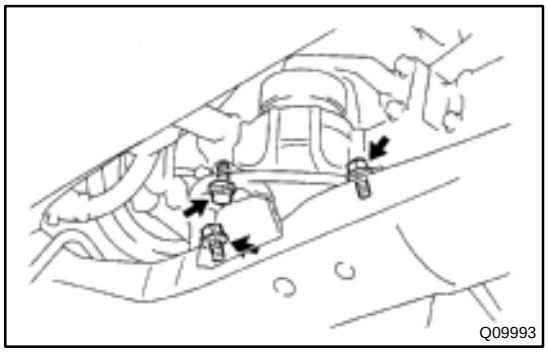

20. REMOVE 3 ENGINE FRONT SIDE MOUNTING BOLTS
Torque:
Silver bolt: 44 N·m (450 kgf·cm, 33 ft·lbf)
Green bolt: 66 N·m (670 kgf·cm, 48 ft·lbf)

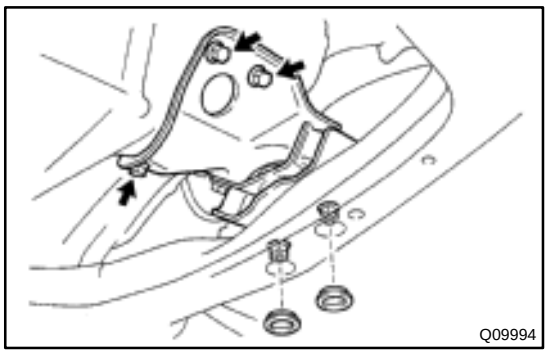

21. REMOVE LH ENGINE MOUNTING INSULATOR WITH BRACKET

(a) Remove the 2 hole plugs, nuts and 3 bolts.
Torque:
Bolt: 64 N·m (650 kgf·cm, 47 ft·lbf)
Nut: 80 N·m (820 kgf·cm, 59 ft·lbf)

(b) Lift up the transaxle and remove the left engine mounting insulator with the bracket.

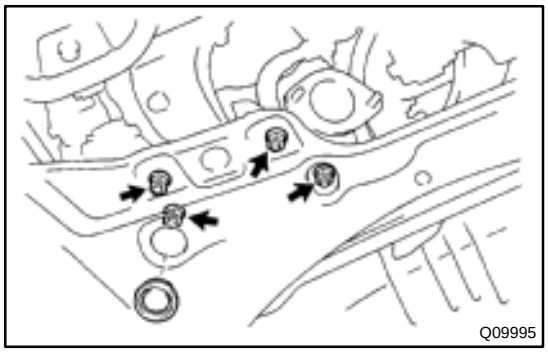

22. REMOVE HOLE PLUG AND 4 ENGINE REAR SIDE MOUNTING NUTS
Torque: 66 N·m (670 kgf·cm, 48 ft·lbf)

23. ATTACH ENGINE SLING DEVICE TO ENGINE HANGER
(See page EM–69)

24. DISCONNECT STEERING RETURN PIPE FROM FRONT SUSPENSION MEMBER

Remove the 2 bolts.
Torque: 10 N·m (100 kgf·cm, 7 ft·lbf)

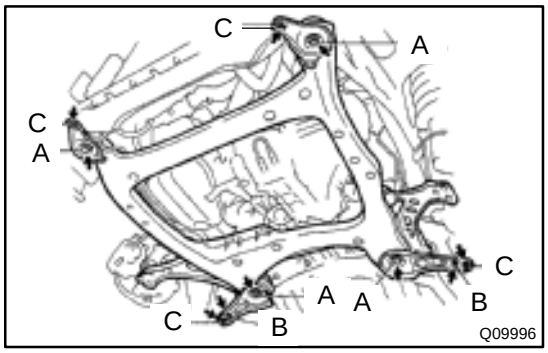

25. REMOVE FRONT SUSPENSION MEMBER WITH LOWER SUSPENSION ARM

(a) Remove the LH and RH fender liner set screws.

(b) Remove the 6 bolts, 4 nuts, front LH and RH suspension member braces, rear LH and RH suspension member braces and front suspension member with the lower suspension arm.
Torque:
Bolt A: 181 N·m (1,850 kgf·cm, 134 ft·lbf)
Bolt B: 32 N·m (330 kgf·cm, 24 ft·lbf)
Nut C: 36 N·m (370 kgf·cm, 27 ft·lbf)

26. JACK UP TRANSAXLE SLIGHTLY

Using a transmission jack, support the transaxle.

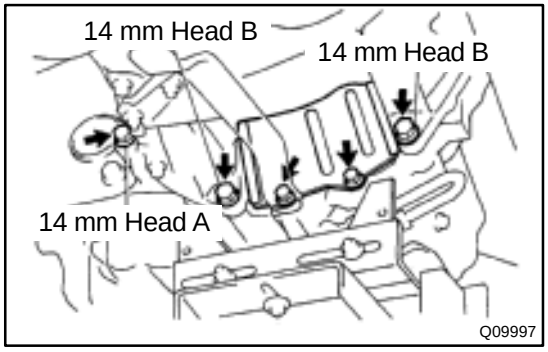

27. REMOVE FLYWHEEL HOUSING UNDER COVER AND TRANSAXLE LOWER SIDE MOUNTING BOLT

(a) Remove the 2 bolts and cover.
Torque: 7.8 N·m (80 kgf·cm, 69 in.·lbf)

(b) Remove the 3 bolts of the transaxle lower side.
Torque:
14 mm head A: 46 N·m (470 kgf·cm, 34 ft·lbf)
14 mm head B: 37 N·m (380 kgf·cm, 27 ft·lbf)

28. REMOVE TRANSAXLE

Lower the engine left side and remove the transaxle from the engine.

HINT:

At the time of installation, please refer to the following items.

- ★ Align the input shaft with the clutch disc and install the transaxle to the engine.
- ★ Temporarily tighten the transaxle mounting bolts.

MX051–01

INSTALLATION

Installation is in the reverse order of removal (See page MX–4).

HINT:

After installation, check and inspect items as follows.

★ Front wheel alignment (See page SA–4).

★ Do the road test.

MANUAL TRANSAXLE ASSEMBLY

COMPONENTS

MX052–02

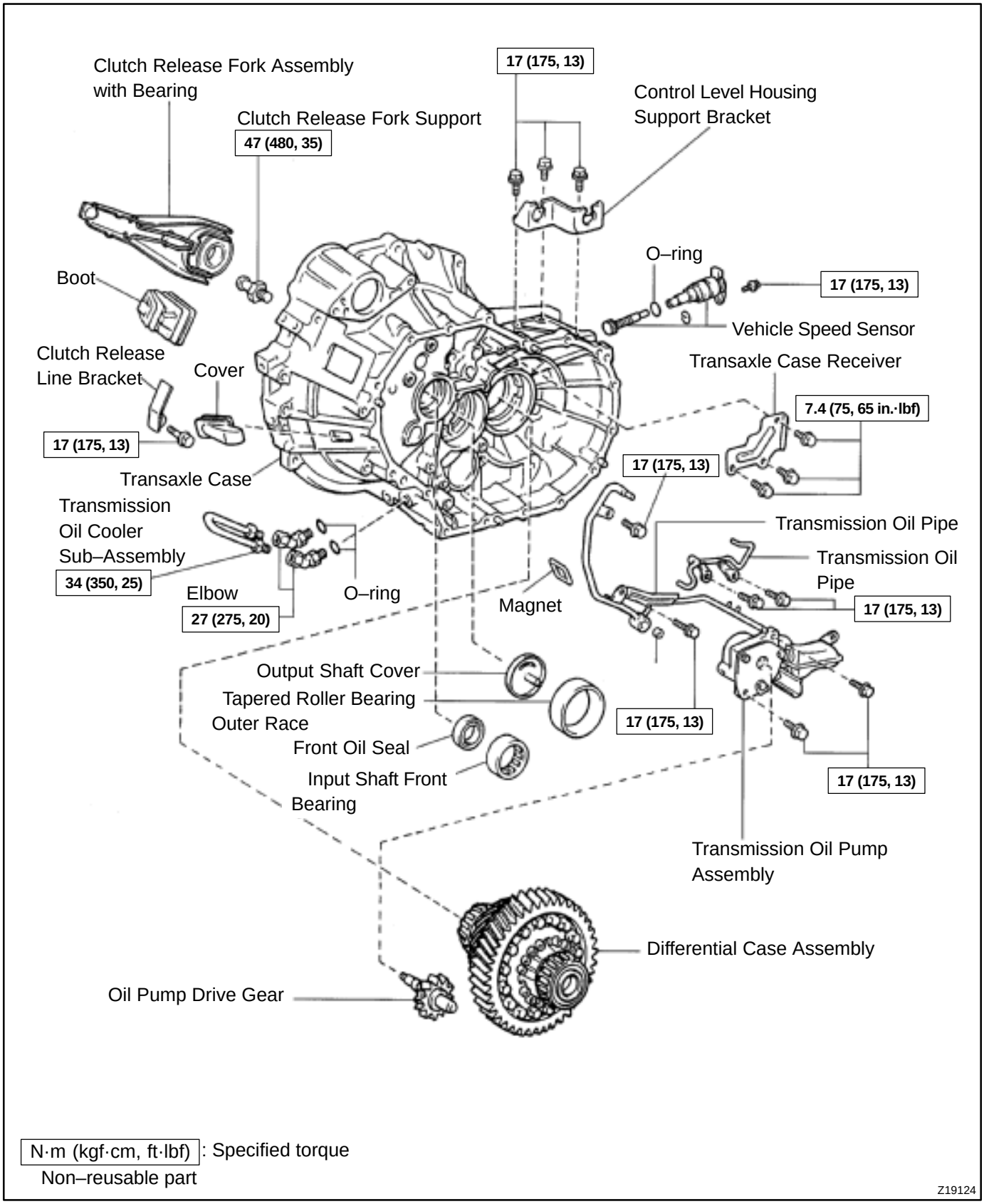

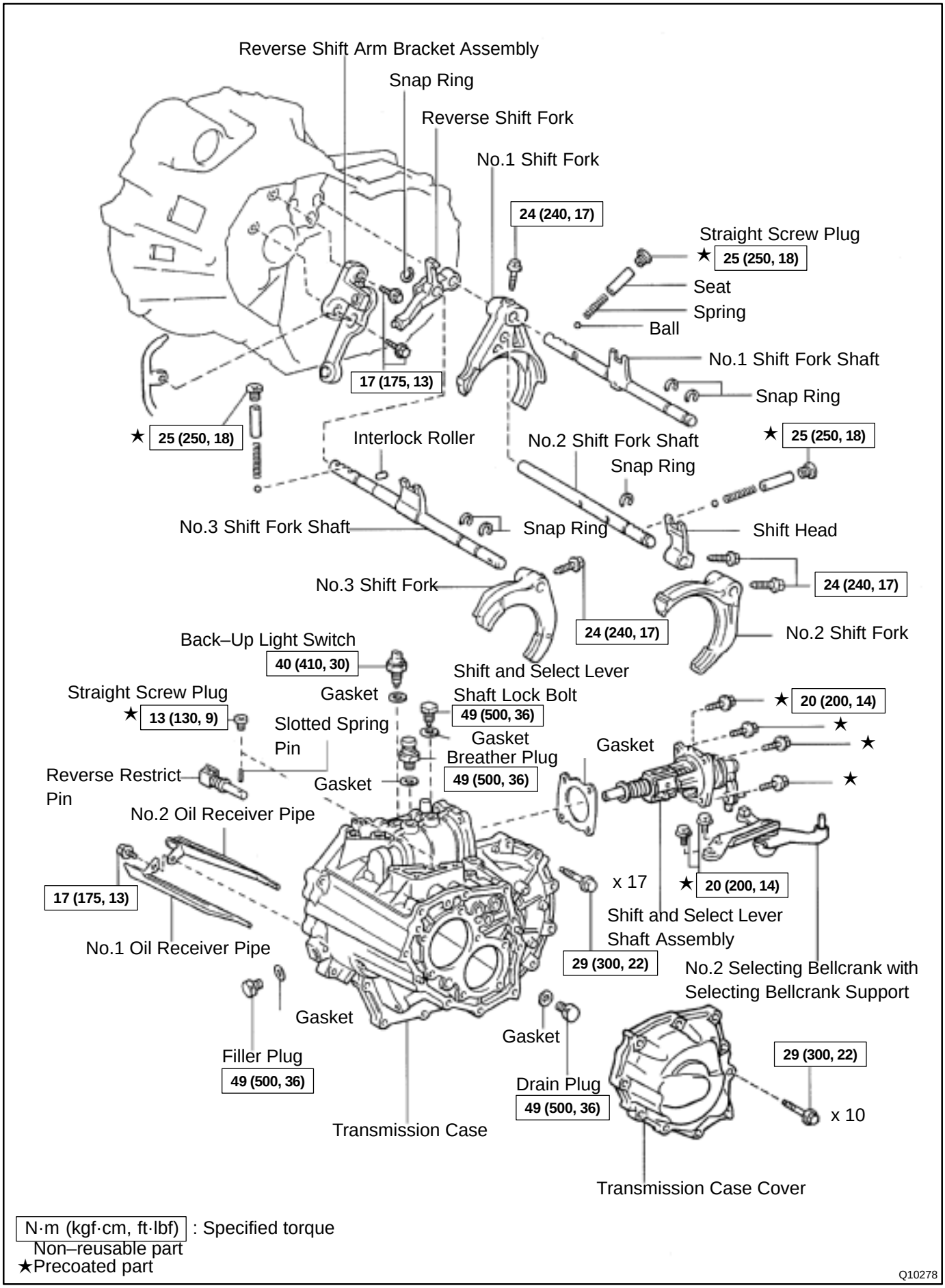
Reverse Shift Arm Bracket Assembly
Snap Ring
Reverse Shift Fork
No.1 Shift Fork
24 (240, 17)
Straight Screw Plug
★ 25 (250, 18)
Seat
Spring
Ball
No.1 Shift Fork Shaft
Snap Ring
17 (175, 13)
★ 25 (250, 18)
Interlock Roller
No.2 Shift Fork Shaft
Snap Ring
★ 25 (250, 18)
No.3 Shift Fork Shaft
Snap Ring
Shift Head
No.3 Shift Fork
24 (240, 17)
24 (240, 17)
No.2 Shift Fork
Back–Up Light Switch
40 (410, 30)
Gasket
Shift and Select Lever Shaft Lock Bolt
49 (500, 36)
Straight Screw Plug
★ 13 (130, 9)
Slotted Spring Pin
Gasket
Breather Plug
49 (500, 36)
Gasket
Reverse Restrict Pin
Gasket
★ 20 (200, 14)
★
★
★
No.2 Oil Receiver Pipe
17 (175, 13)
No.1 Oil Receiver Pipe
x 17
★ 20 (200, 14)
Shift and Select Lever Shaft Assembly
29 (300, 22)
No.2 Selecting Bellcrank with Selecting Bellcrank Support
Gasket
Filler Plug
49 (500, 36)
Gasket
Drain Plug
49 (500, 36)
29 (300, 22)
x 10
Transmission Case
Transmission Case Cover
N·m (kgf·cm, ft·lbf) : Specified torque
Non–reusable part
★Precoated part
Q10278

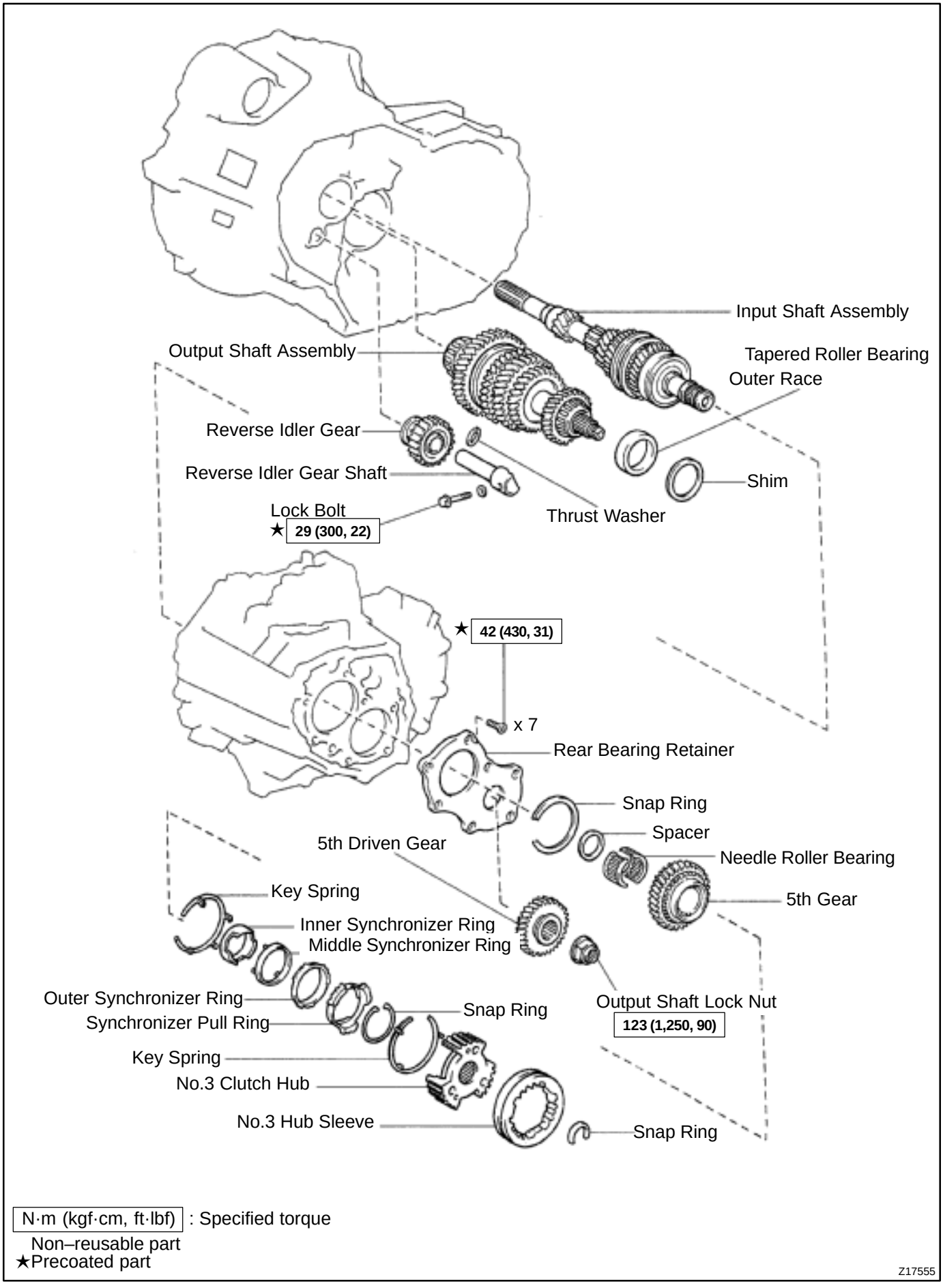

N·m (kgf·cm, ft·lbf) : Specified torque
Non–reusable part
★Precoated part

Z17555

MX053–02

DISASSEMBLY

1. REMOVE RELEASE FORK AND BEARING

2. REMOVE BACK–UP LIGHT SWITCH WITH GASKET
Torque: 40 N·m (410 kgf·cm, 30 ft·lbf)

3. REMOVE BOLT AND VEHICLE SPEED SENSOR
Torque: 17 N·m (175 kgf·cm, 13 ft·lbf)

4. REMOVE NO.2 SELECTING BELLCRANK WITH SELECTING BELLCRANK SUPPORT

Remove the 2 bolts and No.2 selecting bellcrank with the selecting bellcrank support.

Sealant:
Part No. 08833 – 00080, THREE BOND 1344, LOCTITE 242 or equivalent
Torque: 20 N·m (200 kgf·cm, 14 ft·lbf)

5. REMOVE SHIFT AND SELECT LEVER SHAFT LOCK BOLT WITH GASKET
Torque: 49 N·m (500 kgf·cm, 36 ft·lbf)

6. REMOVE SHIFT AND SELECT LEVER SHAFT ASSEMBLY WITH GASKET

Remove the 4 bolts, shift and select lever shaft assembly and gasket.

Sealant:
Part No. 08833 – 00080, THREE BOND 1344, LOCTITE 242 or equivalent
Torque: 20 N·m (200 kgf·cm, 14 ft·lbf)

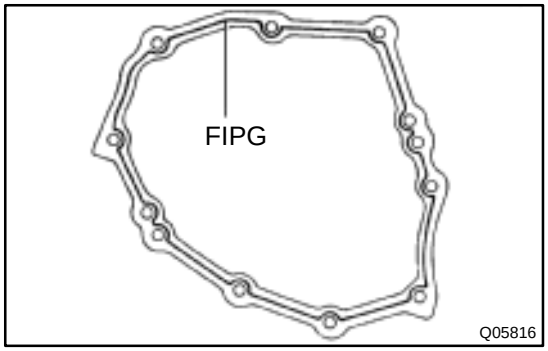

7. REMOVE TRANSMISSION CASE COVER

Remove the 10 bolts and transmission case cover.

FIPG:
Part No. 08826 – 00090, THREE BOND 1281 or equivalent
Torque: 29 N·m (300 kgf·cm, 22 ft·lbf)

8. REMOVE BREATHER PLUG WITH GASKET
Torque: 49 N·m (500 kgf·cm, 36 ft·lbf)

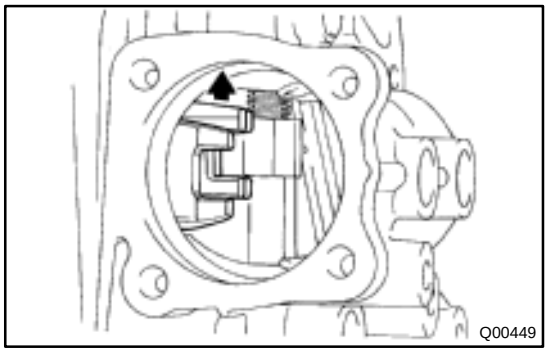

9. REMOVE OUTPUT SHAFT LOCK NUT

(a) Unstake the lock nut.
(b) Engage the gear double meshing.
(c) Remove the lock nut.
Torque: 123 N·m (1,250 kgf·cm, 90 ft·lbf)
(d) Disengage the gear double meshing.

10. REMOVE NO.3 HUB SLEEVE AND NO.3 SHIFT FORK

(a) Remove the No.3 shift fork set bolt.
Torque: 24 N·m (240 kgf·cm, 17 ft·lbf)
(b) Remove the No.3 hub sleeve and No.3 shift fork.

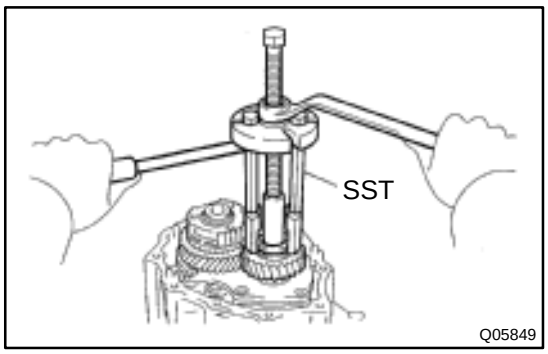

11. REMOVE 5TH DRIVEN GEAR

Using SST, remove the 5th driven gear.

SST 09950–30010

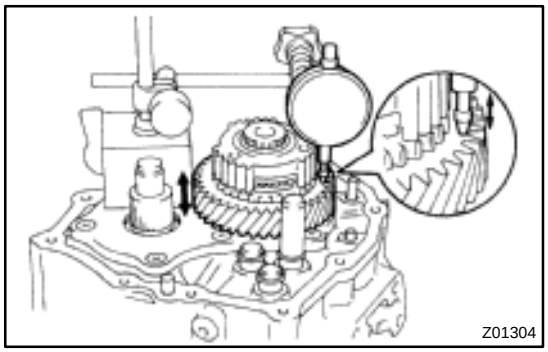

12. MEASURE 5TH GEAR THRUST CLEARANCE AND RADIAL CLEARANCE

(a) Using a dial indicator, measure the thrust clearance.

Standard clearance:
0.10 – 0.57 mm (0.0039 – 0.0224 in.)
Maximum clearance:
0.65 mm (0.0256 in.)

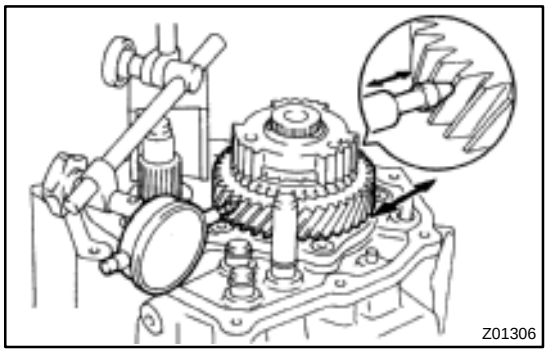

(b) Using a dial indicator, measure the radial clearance.

Standard clearance:
0.009 – 0.050 mm (0.0004 – 0.0020 in.)
Maximum clearance:
0.070 mm (0.0028 in.)

13. REMOVE NO.3 CLUTCH HUB AND 5TH GEAR

(a) Using 2 screwdrivers and a hammer, tap out the snap ring.

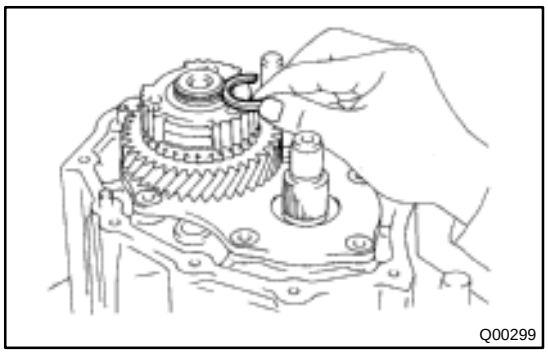

HINT:

At the time of reassembly, please refer to the following item.
Select a snap ring that allows the minimum axial play.

Mark	Thickness mm (in.)	Mark	Thickness mm (in.)
a	1.75 (0.0689)	f	2.00 (0.0787)
b	1.80 (0.0709)	g	2.05 (0.0807)
c	1.85 (0.0729)	h	2.10 (0.0827)
d	1.90 (0.0748)	j	2.15 (0.0847)
e	1.95 (0.0768)	–	–

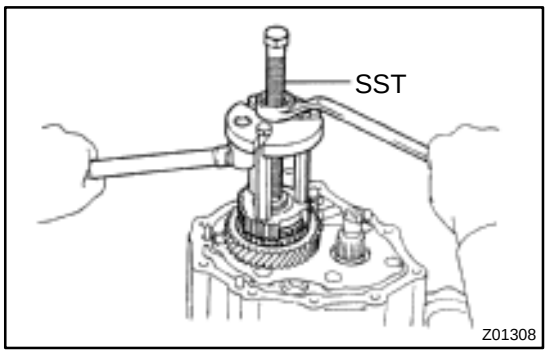

(b) Using SST, remove the No.3 clutch hub with the synchronizer ring and 5th gear.
SST 09950–30010

14. REMOVE NEEDLE ROLLER BEARING AND SPACER

15. REMOVE REAR BEARING RETAINER

Using a torx socket wrench (T45), remove the 7 torx screws and rear bearing retainer.

Sealant:
Part No. 08833 – 00080, THREE BOND 1344, LOCTITE 242 or equivalent
Torque: 42 N·m (430 kgf·cm, 31 ft·lbf)

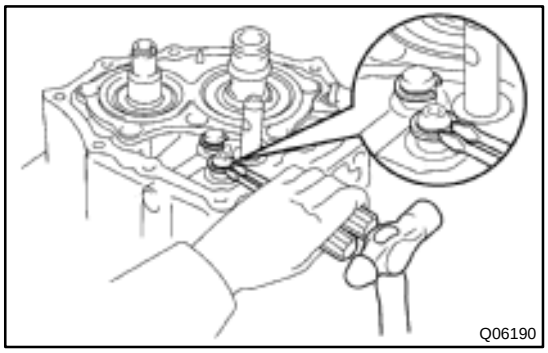

16. REMOVE SNAP RING

(a) Using a snap ring expander, remove the input shaft rear bearing snap ring.

(b) Using 2 screwdrivers and a hammer, remove the 2 snap rings.

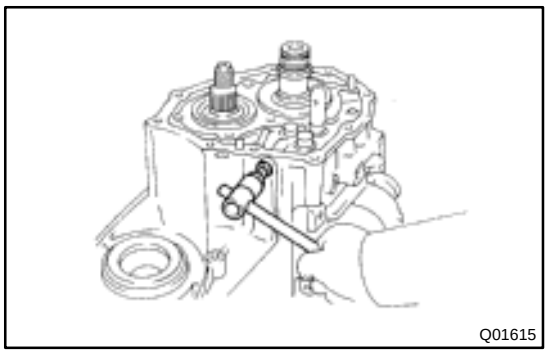

17. REMOVE STRAIGHT SCREW PLUG, SEAT, SPRING AND LOCKING BALL

(a) Using a hexagon wrench (6 mm), remove the plug.
Sealant:
Part No. 08833 – 00080, THREE BOND 1344, LOCTITE 242 or equivalent
Torque: 25 N·m (250 kgf·cm, 18 ft·lbf)

(b) Using a magnetic finger, remove the seat, spring and locking ball.

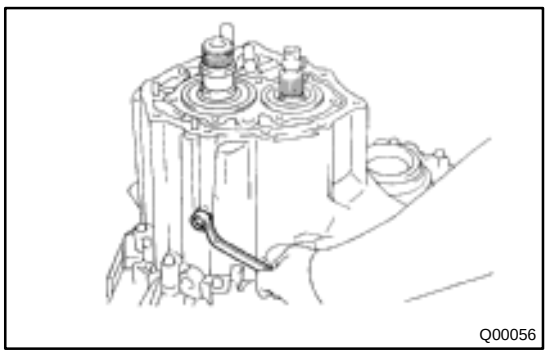

18. REMOVE REVERSE IDLER GEAR SHAFT LOCK BOLT
Sealant:
Part No. 08833 – 00080, THREE BOND 1344, LOCTITE 242 or equivalent
Torque: 29 N·m (300 kgf·cm, 22 ft·lbf)

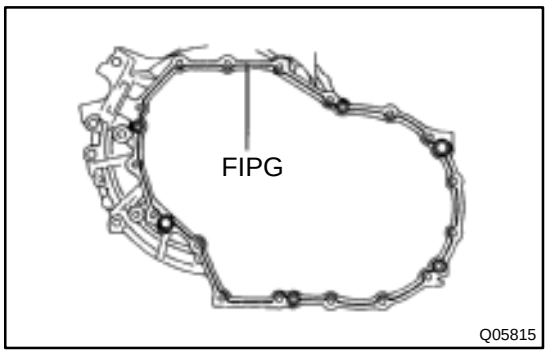

19. REMOVE TRANSMISSION CASE

Remove the 17 bolts and tap the case with a plastic hammer.

FIPG:

Part No. 08826 – 00090, THREE BOND 1281 or equivalent

Torque: 29 N·m (300 kgf·cm, 22 ft·lbf)

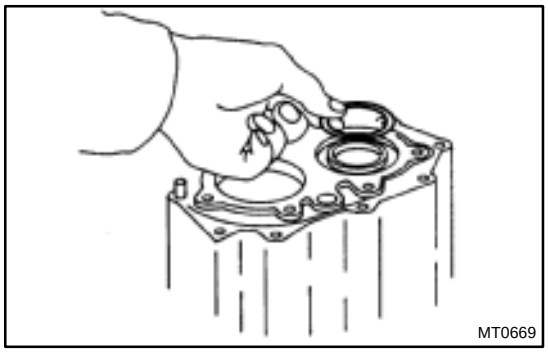

20. REMOVE SHIM

HINT:

At the time of reassembly, please refer to the following item.

Install the previously selected shim by adjusting output shaft preload.

(See page MX–22)

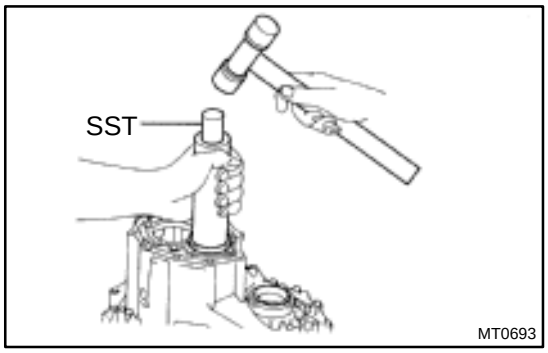

21. REMOVE OUTPUT SHAFT REAR TAPER ROLLER BEARING OUTER RACE

Using SST and a hammer, remove the output shaft rear taper roller bearing outer race.

SST 09316–60011 (09316–00011)

22. REMOVE TRANSMISSION OIL PIPE

(a) Remove the gasket from the oil pipe.

(b) Remove the 2 bolts and oil pipe.

Torque: 17 N·m (175 kgf·cm, 13 ft·lbf)

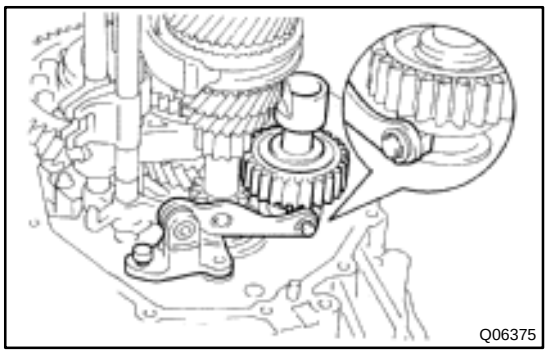

23. REMOVE REVERSE SHIFT ARM BRACKET ASSEMBLY

Remove the bolt and pull off the reverse shift arm and bracket.

Torque: 17 N·m (175 kgf·cm, 13 ft·lbf)

24. REMOVE REVERSE IDLER GEAR AND SHAFT

Pull out the shaft, and remove the reverse idler gear and thrust washer.

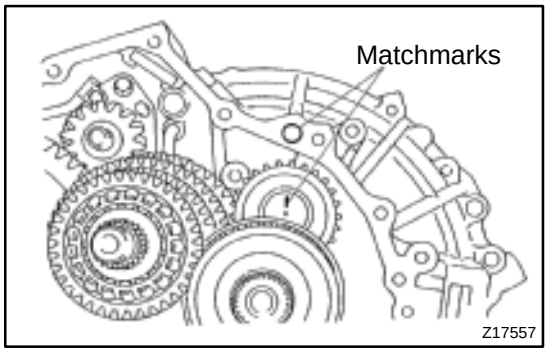

HINT:

At the time of reassembly, please refer to the following item.

Align the matchmarks, as shown.

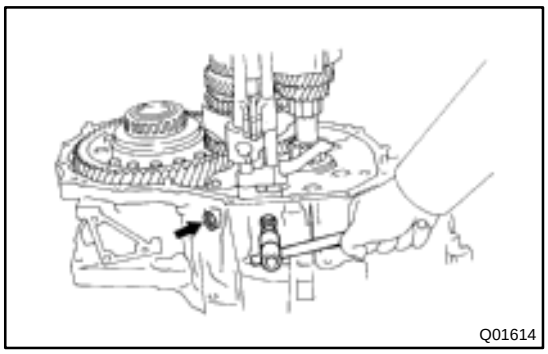

25. REMOVE STRAIGHT SCREW PLUG, LOCKING BALL AND SPRING

(a) Using a hexagon wrench (6 mm), remove the 2 plugs.
Sealant:
Part No. 08833 – 00080, THREE BOND 1344, LOCTITE 242 or equivalent
Torque: 25 N·m (250 kgf·cm, 18 ft·lbf)

(b) Using a magnetic finger, remove the 2 seats, springs and balls.

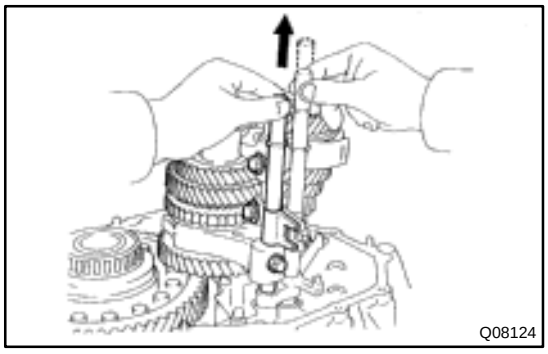

26. REMOVE NO.1, NO.2 SHIFT FORKS AND SHIFT HEAD SET BOLT
Torque: 24 N·m (240 kgf·cm, 17 ft·lbf)

27. REMOVE NO.1 SHIFT FORK SHAFT

Pull up the No.3 shift fork shaft, and remove the No.1 shift fork shaft.

HINT:

At the time of reassembly, please refer to the following item.

When it is difficult to push the fork shaft through the reverse shift fork, pull up the No.3 shift fork shaft.

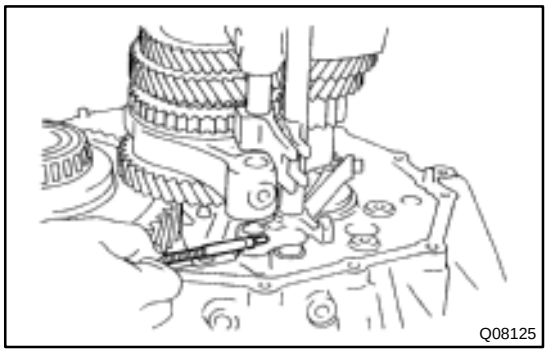

28. REMOVE INTERLOCK ROLLER

Using a magnetic finger, remove the interlock roller from the reverse shift fork.

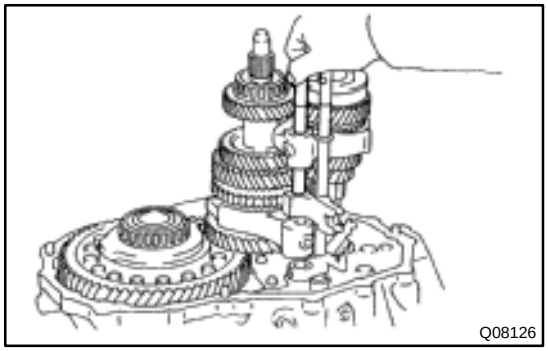

29. REMOVE NO.2 SHIFT FORK SHAFT, SHIFT HEAD AND NO.1 SHIFT FORK

(a) Pull out the No.2 shift fork shaft.

(b) Remove the shift head and No.1 shift fork.

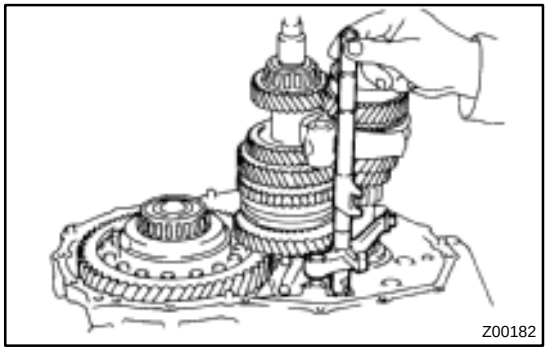

30. REMOVE NO.3 SHIFT FORK SHAFT WITH REVERSE SHIFT FORK AND NO.2 SHIFT FORK

(a) Pull out the No.3 shift fork shaft with the reverse shift fork.

(b) Remove the No.2 shift fork.

31. REMOVE SNAP RING

(a) Using 2 screwdrivers and a hammer, remove the snap ring and reverse shift fork from the No.3 shift fork shaft.

(b) Using 2 screwdrivers and a hammer, remove the 3 snap rings from the No.1, No.2 and No.3 shift fork shafts.

32. REMOVE INPUT AND OUTPUT SHAFTS ASSEMBLY

(a) Leaning the output shaft to the differential side, remove the input shaft assembly.

(b) Lift up the differential case assembly, remove the output shaft assembly.

33. REMOVE DIFFERENTIAL CASE ASSEMBLY

(a) Remove the oil pump drive gear.

(b) Remove the differential case assembly.

34. REMOVE MAGNET FROM TRANSAXLE CASE

35. REMOVE TRANSMISSION OIL PUMP ASSEMBLY AND OIL PIPE

(a) Remove the 2 bolts and oil pipe.
Torque: 17 N·m (175 kgf·cm, 13 ft·lbf)

(b) Remove the 2 bolts and oil pump assembly.
Torque: 17 N·m (175 kgf·cm, 13 ft·lbf)

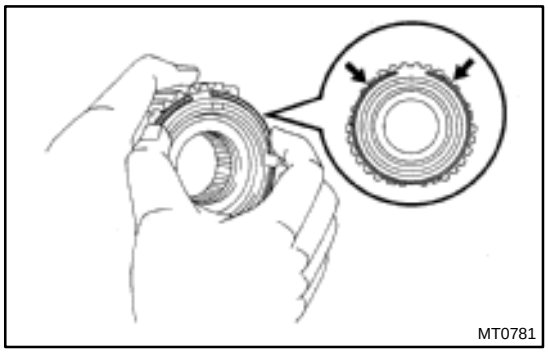
MT0781

36. REMOVE NO.5 SYNCHRONIZER RING WITH KEY SPRING FROM NO.3 CLUTCH HUB

(a) Remove the No.5 synchronizer ring with the key spring from the No.3 clutch hub.

(b) Using a screwdriver, remove the snap ring.

HINT:

Wrap vinyl tape on the screwdriver to prevent damaging the synchronizer ring.

(c) Remove the synchronizer rings.

MX054–01

INSPECTION

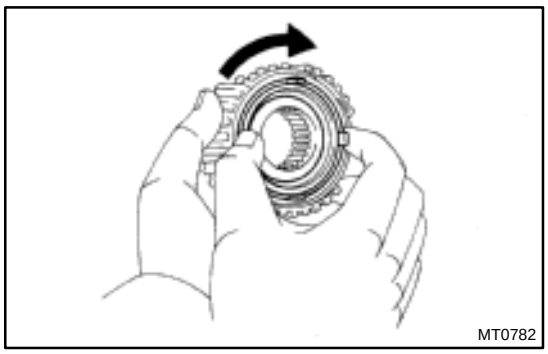
MT0782

1. INSPECT NO.5 SYNCHRONIZER RING

(a) Check for wear or damage.

(b) Check the braking effect of the synchronizer ring. Turn the middle No.5 synchronizer ring in one direction while pushing it to the outer No.5 synchronizer ring. Check that the ring locks.

If it does not lock, replace the synchronizer ring.

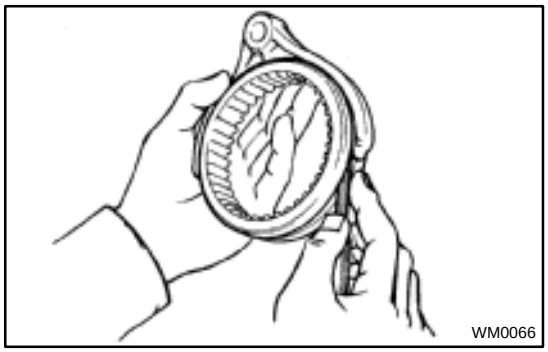
WM0066

2. MEASURE SHIFT FORK AND HUB SLEEVE CLEARANCE

Using a feeler gauge, measure the clearance between the hub sleeve and shift fork.

Maximum clearance:
1.0 mm (0.039 in.)

If the clearance exceeds the maximum, replace the shift fork or hub sleeve.

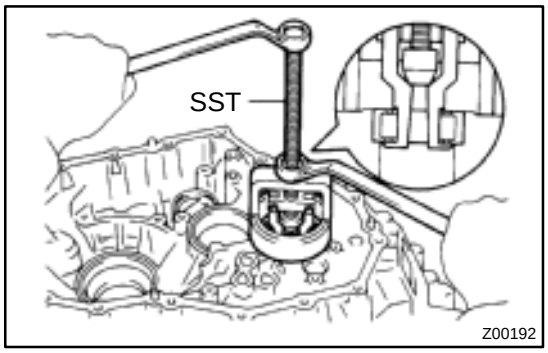

Z00192

3. IF NECESSARY, REPLACE INPUT SHAFT BEARING AND OIL SEAL

(a) Remove the 3 bolts and transaxle case receiver.

(b) Using SST, pull out the bearing.
SST 09612–65014

(c) Using a screwdriver, remove the oil seal.

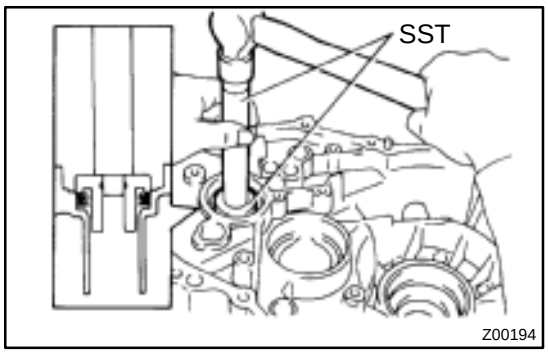

Z00194

(d) Using SST, drive in a new oil seal.
SST 09608–00081, 09950–70010 (09951–07150)

(e) Coat the lip of seal with MP grease.

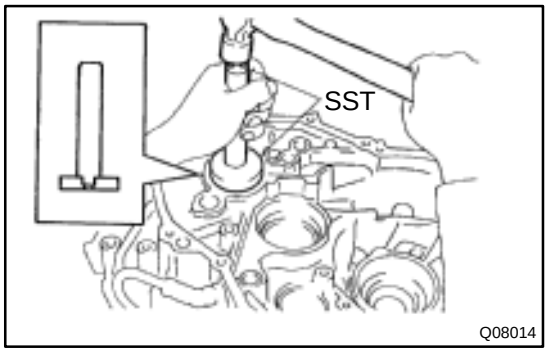

Q08014

(f) Using SST, drive in a new bearing.
SST 09950–60010 (09951–00580), 09950–70010 (09951–07150)

(g) Install the transaxle case receiver.

(h) Install and torque the 3 bolts.
Torque: 7.4 N·m (75 kgf·cm, 65 in.·lbf)

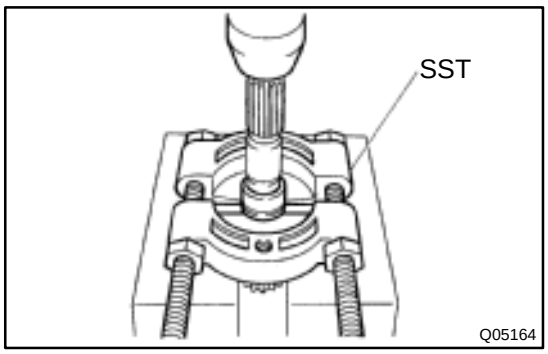

(i) Using SST and a press, remove the inner race.
SST 09950–00020

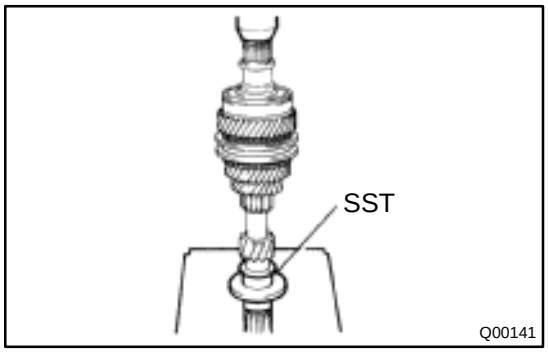

(j) Using SST and a press, install a new input shaft front bearing inner race.
SST 09316–60011 (09316–00021)

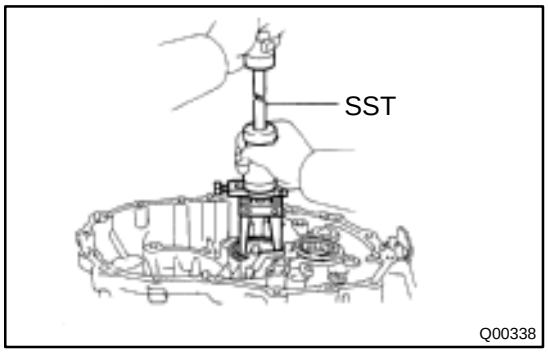

4. IF NECESSARY, REPLACE OUTPUT SHAFT FRONT BEARING OUTER RACE AND OUTPUT SHAFT FRONT COVER

(a) Using SST, pull out the output shaft front bearing outer race.
SST 09308–00010

(b) Remove the output shaft cover.

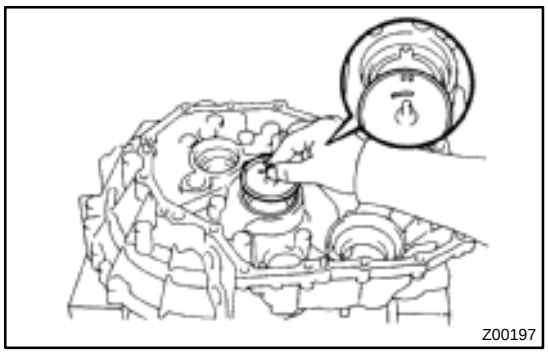

(c) Install a new output shaft cover.

HINT:
Install the output shaft cover projection into the case side groove.

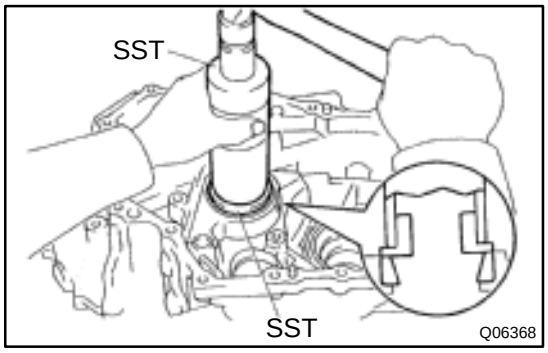

(d) Using SST and a hammer, drive in a new output shaft front bearing outer race.
SST 09316–60011 (09316–00011, 09316–00021)

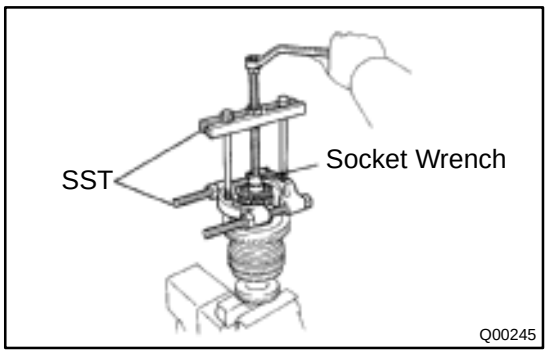

(e) Using SST and a socket wrench, remove the output shaft front bearing.
SST 09950–00020, 09950–00030

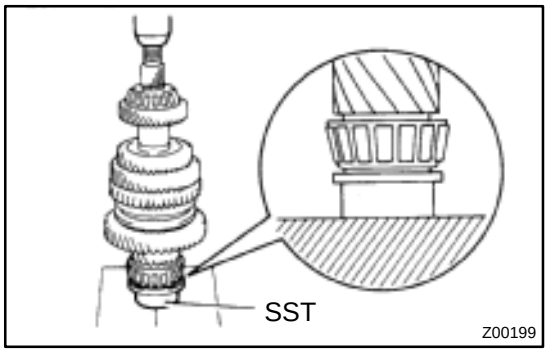

(f) Using SST and a press, install a new output shaft front bearing.
SST 09316–60011 (09316–00071)

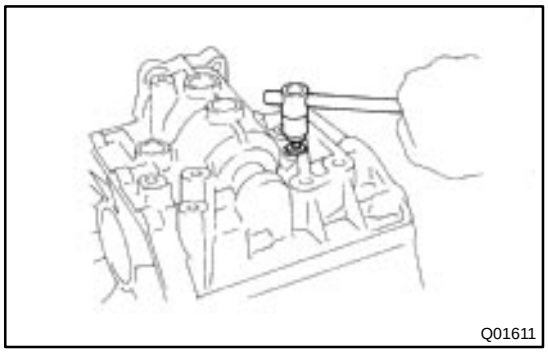

5. IF NECESSARY, REPLACE REVERSE RESTRICT PIN

(a) Using a hexagon wrench (6 mm), remove the screw plug.

(b) Using a pin punch and hammer, drive out the slotted spring pin.

(c) Replace the reverse restrict pin.

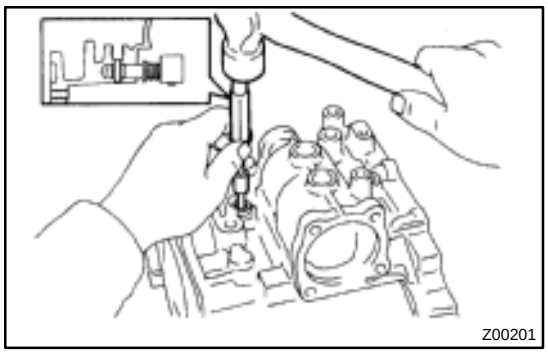

(d) Using a pin punch and hammer, drive in the slotted spring pin.

(e) Apply sealant to the screw plug threads.
Sealant:
Part No. 08833 – 00080, THREE BOND 1344, LOCTITE 242 or equivalent

(f) Using a hexagon wrench (6 mm), install and torque the screw plug.
Torque: 13 N·m (130 kgf·cm, 9 ft·lbf)

MX055–01

REASSEMBLY

Reassembly is in the reverse order of disassembly.

HINT:

- ★ Before reassembly, select a shim by adjusting output shaft preload.
- ★ Coat all of the sliding and rotating surfaces with gear oil before reassembly.

ADJUST OUTPUT SHAFT PRELOAD

(a) Install the output shaft assembly to the transaxle case.

(b) Install the transmission case to the transaxle case.

HINT:

If necessary, tap on the case with a plastic hammer.

(c) Install and torque the 17 bolts.
Torque: 29 N·m (300 kgf·cm, 22 ft·lbf)

(d) Install the output shaft rear taper roller bearing outer race.

(e) Install the adjusting shim.

HINT:

When reusing the output shaft bearing, first install a shim of the same thickness as before. If installing a new taper roller bearing, first select and install a shim of lesser thickness than before.

(f) Install the rear bearing retainer.

(g) Using a torx wrench (T45), install and torque the 7 torx screws.
Torque: 42 N·m (430 kgf·cm, 31 ft·lbf)

(h) Install a new lock nut to the output shaft.

(i) Turn the output shaft right and left 2 or 3 times to allow the bearing to settle.

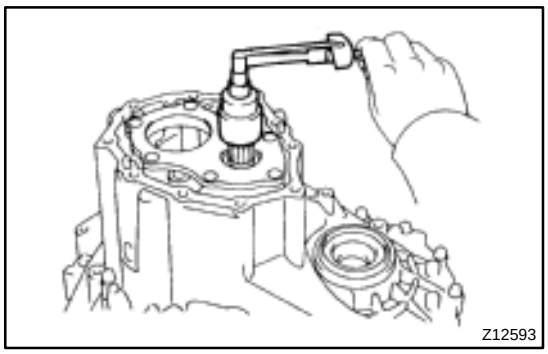
Z12593

(j) Using a torque wrench, measure the preload.
Preload (at starting):
New bearing
0.8 – 1.6 N·m (8 – 16 kgf·cm, 6.9 – 13.9 in.·lbf)
Reused bearing
0.5 – 1.0 N·m (5 – 10 kgf·cm, 4.3 – 8.7 in.·lbf)
If the preload is not within the specification, select an appropriate adjusting shim.
The preload will change approx. 0.4 – 0.5 N·m (4 – 5 kgf·cm, 3.5 – 4.3 in.·lbf) for every 0.05 mm change in adjusting shim thickness.

Mark	Thickness mm (in.)	Mark	Thickness mm (in.)
0	1.30 (0.0512)	D	1.95 (0.0768)
1	1.35 (0.0531)	E	2.00 (0.0787)
2	1.40 (0.0551)	F	2.05 (0.0807)
3	1.45 (0.0571)	G	2.10 (0.0827)
4	1.50 (0.0591)	H	2.15 (0.0846)
5	1.55 (0.0610)	J	2.20 (0.0866)
6	1.60 (0.0630)	K	2.25 (0.0886)
7	1.65 (0.0650)	L	2.30 (0.0906)
8	1.70 (0.0669)	M	2.35 (0.0925)
9	1.75 (0.0689)	N	2.40 (0.0945)
A	1.80 (0.0709)	P	2.45 (0.0965)
B	1.85 (0.0728)	Q	2.50 (0.0984)
C	1.90 (0.0748)	–	–

(k) Remove the lock nut.
(l) Remove these parts. Removal is in the reverse order of installation.
★ Rear bearing retainer
★ Shim
★ Transmission case
★ Output shaft assembly
★ Output shaft rear bearing outer race

INPUT SHAFT

COMPONENTS

MX056–01

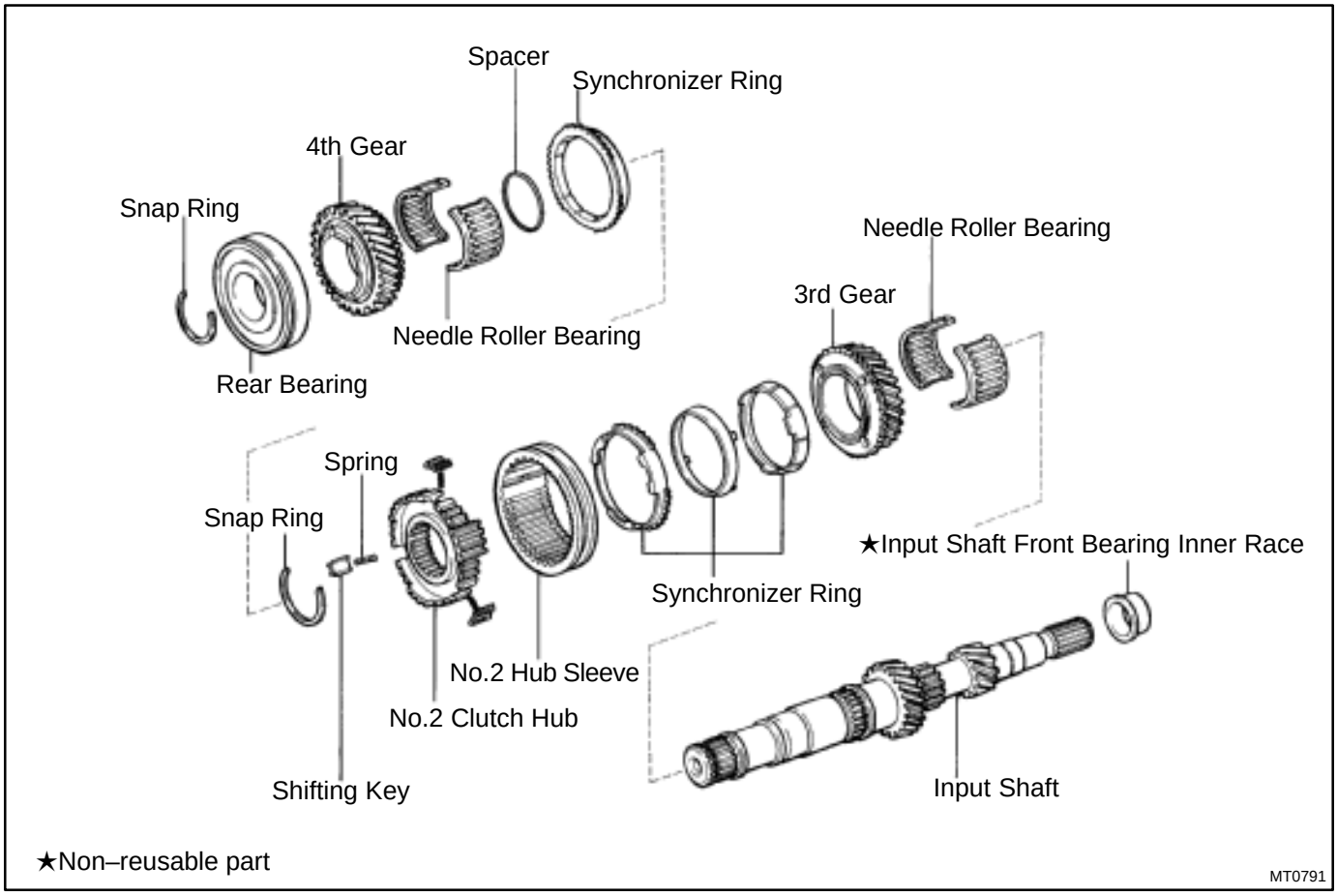

MX057–01

DISASSEMBLY

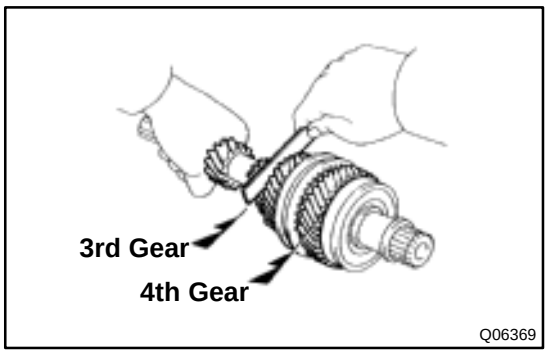

1. MEASURE 3RD AND 4TH GEARS THRUST CLEARANCE

Using a feeler gauge, measure the thrust clearance.

Standard clearance:
3rd gear: 0.10 – 0.35 mm (0.0039 – 0.0138 in.)
4th gear: 0.10 – 0.55 mm (0.0039 – 0.0217 in.)
Maximum clearance:
3rd gear: 0.40 mm (0.0157 in.)
4th gear: 0.60 mm (0.0236 in.)

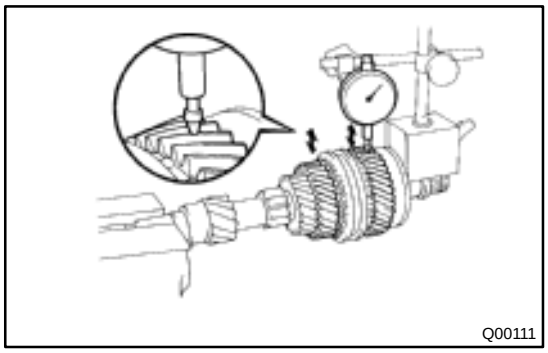

2. CHECK 3RD AND 4TH GEARS RADIAL CLEARANCE

Using a dial indicator, measure the radial clearance between the gear and shaft.

Standard clearance:
3rd gear: 0.009 – 0.053 mm (0.0004 – 0.0021 in.)
4th gear: 0.009 – 0.051 mm (0.0004 – 0.0020 in.)
Maximum clearance:
3rd and 4th gears: 0.070 mm (0.0028 in.)

If the clearance exceeds the maximum, replace the gear, needle roller bearing or shaft.

3. REMOVE SNAP RING

Using 2 screwdrivers and a hammer, tap out the snap ring.

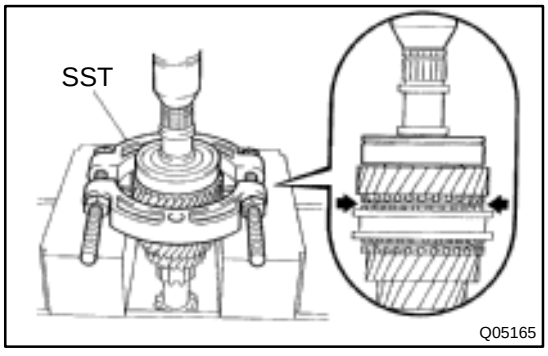

4. REMOVE REAR BALL BEARING AND 4TH GEAR

Using SST and a press, remove the rear bearing.

SST 09950–00020

5. REMOVE NEEDLE ROLLER BEARING, SPACER AND SYNCHRONIZER RING

6. REMOVE SNAP RING

Using 2 screwdrivers and a hammer, tap out the snap ring.

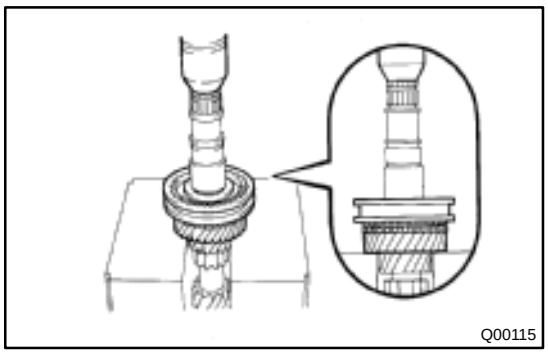

7. REMOVE NO.2 CLUTCH HUB ASSEMBLY, SYNCHRONIZER RING AND 3RD GEAR

Using a press, remove the No.2 hub sleeve, 3rd gear and synchronizer rings.

8. REMOVE NEEDLE ROLLER BEARING

MX058–01

INSPECTION

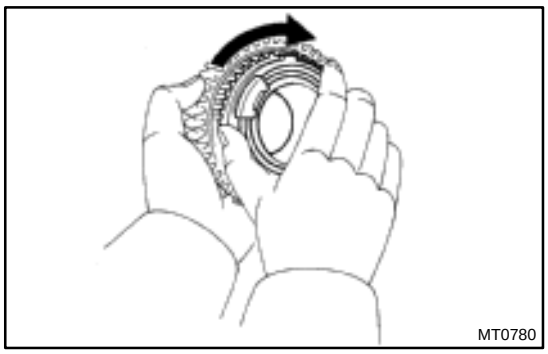

1. INSPECT 3RD GEAR SYNCHRONIZER RING

(a) Check for wear or damage.

(b) Check the braking effect of the synchronizer ring. Turn the synchronizer ring in one direction while pushing it to the gear cone. Check that the ring locks.

If it does not lock, replace the synchronizer ring.

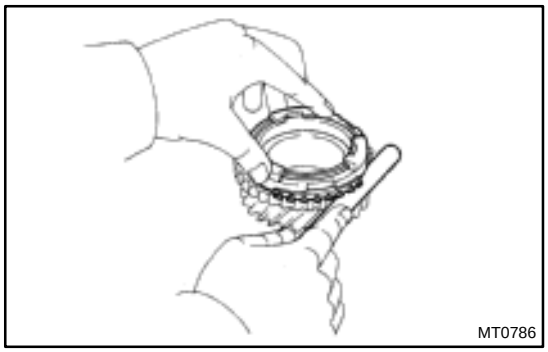

(c) Using a feeler gauge, measure the clearance between the synchronizer ring back and gear spline end.

Minimum clearance:
0.7 mm (0.028 in.)

If the clearance is less than the minimum, replace the synchronizer ring.

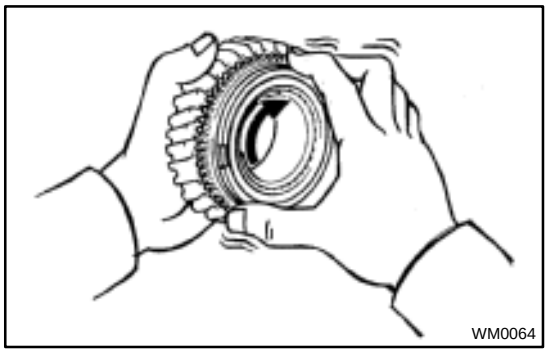

2. INSPECT 4TH GEAR SYNCHRONIZER RING

(a) Check for wear or damage.

(b) Check the braking effect of the synchronizer ring. Turn the synchronizer ring in one direction while pushing it to the gear cone. Check that the ring locks.

If the braking effect is insufficient, apply a small amount of the fine lapping compound between the synchronizer ring and gear cone. Lightly rub the synchronizer ring and gear cone together.

NOTICE:

Ensure the fine lapping compound is completely washed off after rubbing.

(c) Check again the braking effect of the synchronizer ring.

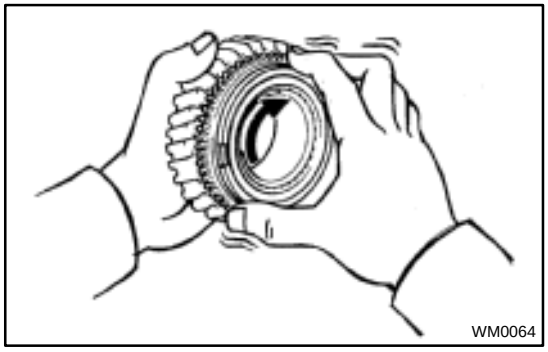

(d) Using a feeler gauge, measure the clearance between the synchronizer ring back and spline end.

Minimum clearance:
0.8 mm (0.031 in.)

If the clearance is less than the minimum, replace the synchronizer ring, and apply a small amount of the fine lapping compound on gear cone.

NOTICE:

Ensure the fine lapping compound is completely washed off after rubbing.

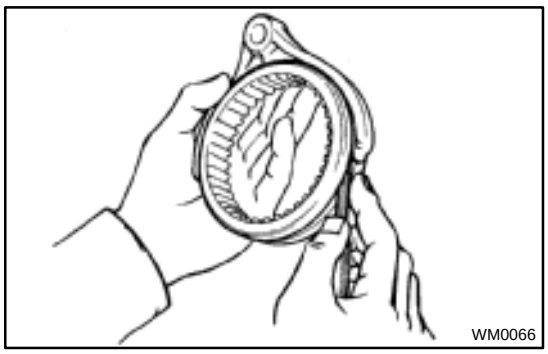

3. MEASURE NO.2 SHIFT FORK AND HUB SLEEVE CLEARANCE

Using a feeler gauge, measure the clearance between the hub sleeve and shift fork.

Maximum clearance:
1.0 mm (0.039 in.)

If the clearance exceeds the maximum, replace the shift fork or hub sleeve.

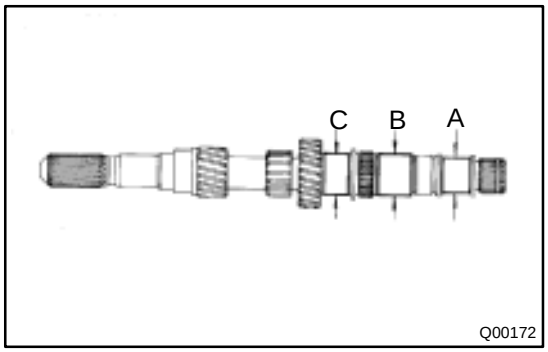

4. INSPECT INPUT SHAFT

(a) Check the input shaft for wear or damage.

(b) Using a micrometer, measure the outer diameter of the input shaft journal surface.

Minimum outer diameter:
Part A: 27.950 mm (1.1004 in.)
Part B and C: 35.950 mm (1.4154 in.)

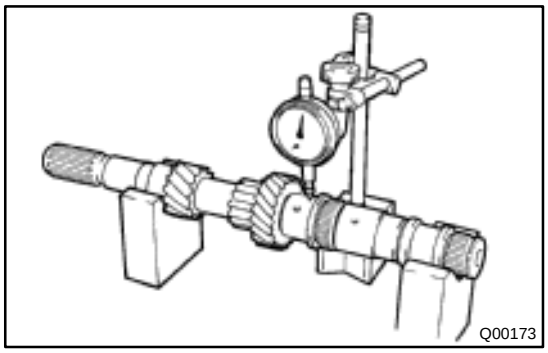

(c) Using a dial indicator, check the shaft runout.

Maximum runout:
0.05 mm (0.0020 in.)

MX059–02

REASSEMBLY

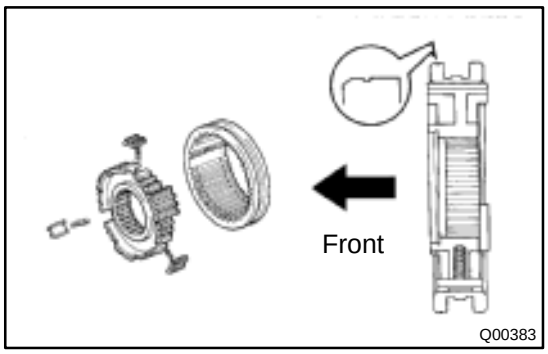

HINT:

Coat all of the sliding and rotating surfaces with gear oil before reassembly.

1. INSTALL NO.2 CLUTCH HUB INTO HUB SLEEVE

(a) Install the 3 springs and shifting keys to the clutch hub.

(b) Install the hub sleeve to the clutch hub.

HINT:

Direct identification groove of the hub sleeve to front of the transmission.

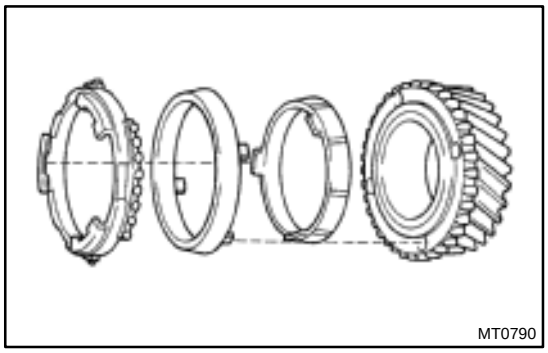

2. INSTALL NEEDLE ROLLER BEARING, 3RD GEAR, SYNCHRONIZER RING AND NO.2 HUB SLEEVE ASSEMBLY TO INPUT SHAFT

(a) Apply MP grease to the needle roller bearing.

(b) Assemble the needle roller bearings into the 3rd gear.

(c) Place the synchronizer rings on the gear and align the ring slots with the shifting keys.

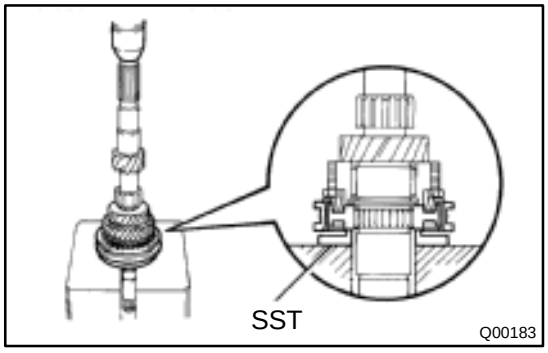

(d) Using SST and a press, install the 3rd gear and No.2 hub sleeve.

SST 09506–35010

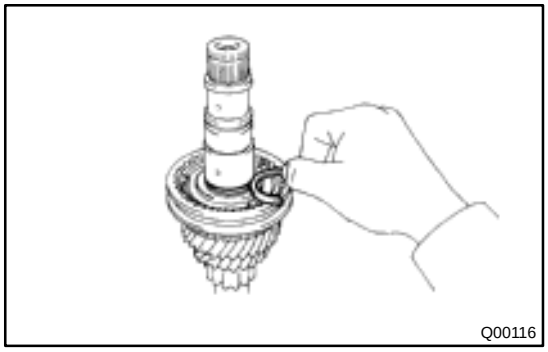

3. INSTALL SNAP RING

(a) Select a snap ring that allows the minimum axial play.

Mark	Thickness mm (in.)	Mark	Thickness mm (in.)
H	2.30 (0.0906)	M	2.50 (0.0984)
J	2.35 (0.0925)	N	2.55 (0.1004)
K	2.40 (0.0945)	P	2.60 (0.1024)
L	2.45 (0.0965)	–	–

(b) Using a screwdriver and hammer, tap in the snap ring.

4. MEASURE 3RD GEAR THRUST CLEARANCE
(See page MX–24)

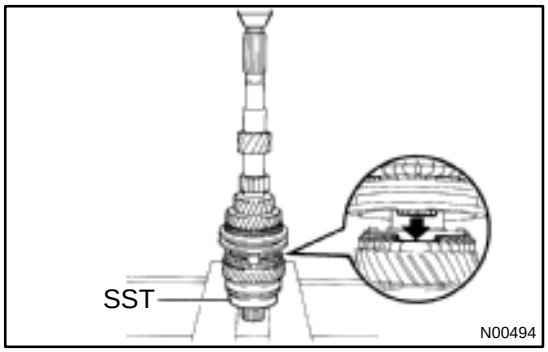

5. INSTALL SPACER, SYNCHRONIZER RING, NEEDLE ROLLER BEARING, 4TH GEAR AND REAR BALL BEARING

(a) Install the spacer.
(b) Apply MP grease to the needle roller bearings.
(c) Place the synchronizer ring on the gear and align the ring slots with the shifting keys.
(d) Install the 4th gear.
(e) Using SST and a press, install the rear ball bearing.
SST 09506–35010

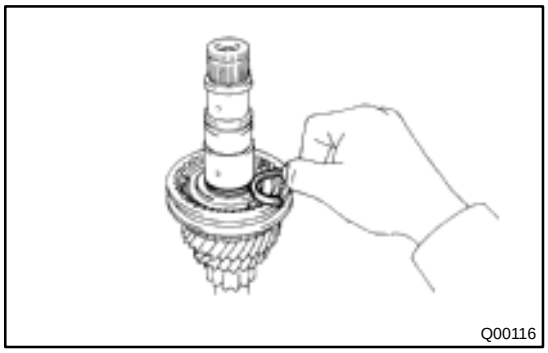

6. INSTALL SNAP RING

(a) Select a snap ring that allows the minimum axial play.

Mark	Thickness mm (in.)	Mark	Thickness mm (in.)
1	2.35 (0.0925)	5	2.55 (0.1004)
2	2.40 (0.0945)	6	2.60 (0.1024)
3	2.45 (0.0965)	7	2.65 (0.1043)
4	2.50 (0.0984)	8	2.70 (0.1063)

(b) Using a screwdriver and hammer, tap in the snap ring.

7. MEASURE 4TH GEAR THRUST CLEARANCE
(See page MX–24)

OUTPUT SHAFT

COMPONENTS

MX05A–01

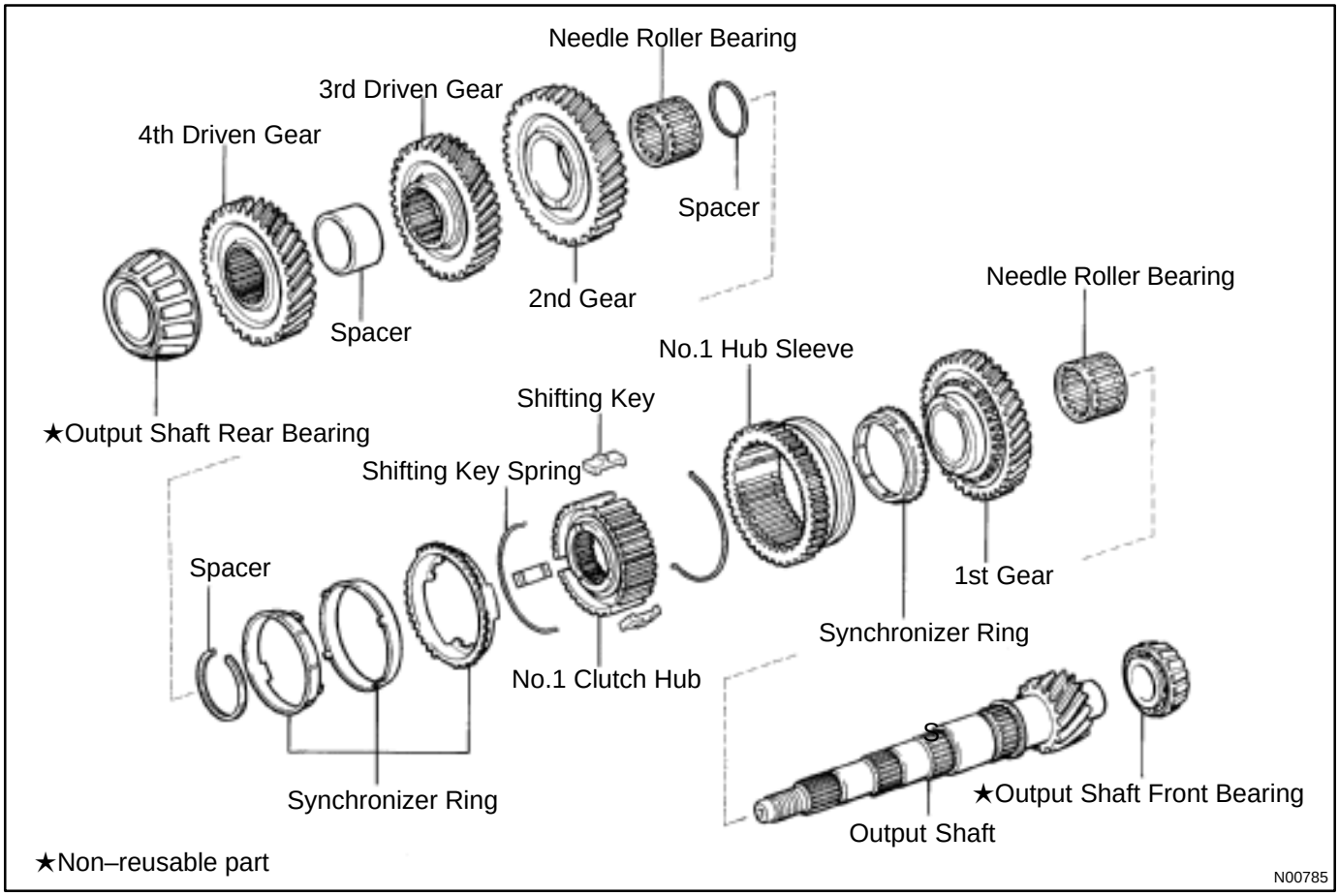

MX05B–01

DISASSEMBLY

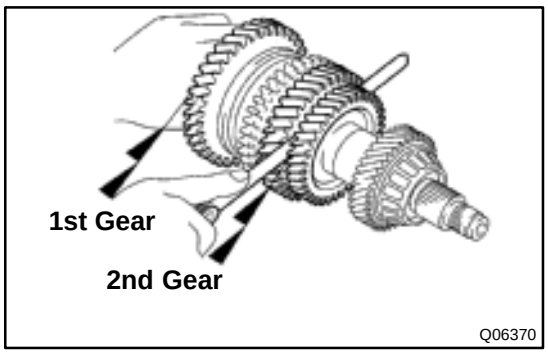

1. MEASURE 1ST AND 2ND GEARS THRUST CLEARANCE

Using a feeler gauge, measure the thrust clearance.

Standard clearance:
1st gear: 0.10 – 0.35 mm (0.0039 – 0.0138 in.)
2nd gear: 0.10 – 0.45 mm (0.0039 – 0.0177 in.)
Maximum clearance:
1st gear: 0.40 mm (0.0157 in.)
2nd gear: 0.50 mm (0.0197 in.)

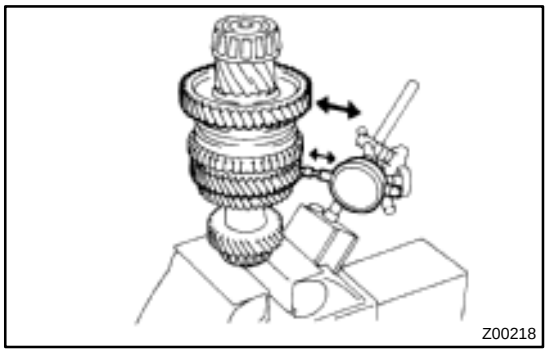

2. CHECK 1ST AND 2ND GEARS RADIAL CLEARANCE

Using a dial indicator, measure the radial clearance between the gear and shaft.

Standard clearance:
1st gear: 0.009 – 0.051 mm (0.0004 – 0.0020 in.)
2nd gear: 0.009 – 0.053 mm (0.0004 – 0.0021 in.)
Maximum clearance:
1st and 2nd gears: 0.070 mm (0.0028 in.)

If the clearance exceeds the maximum, replace the gear, needle roller bearing or shaft.

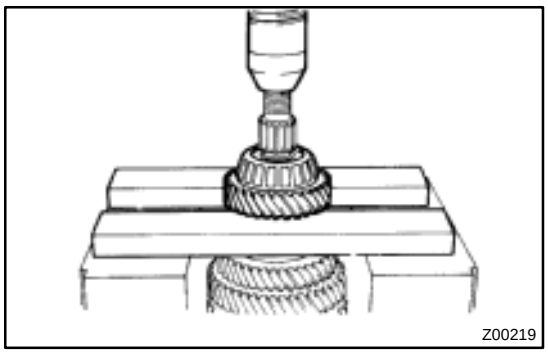

3. REMOVE OUTPUT SHAFT REAR BEARING, 4TH DRIVEN GEAR AND SPACER

(a) Using a press, remove the bearing and 4th driven gear.
(b) Remove the spacer.

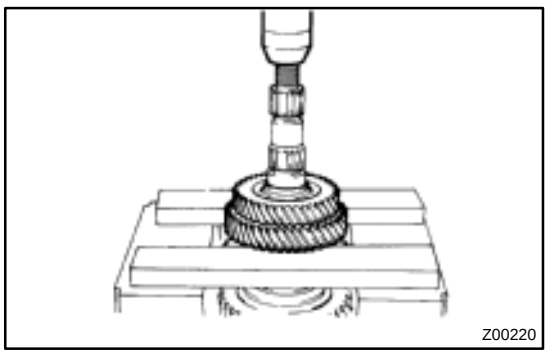

4. REMOVE 3RD DRIVEN GEAR AND 2ND GEAR

Using a press, remove the 3rd driven gear and 2nd gear.

5. REMOVE NEEDLE ROLLER BEARING, SPACER AND SYNCHRONIZER RING

6. REMOVE SNAP RING

Using a snap ring expander, remove the snap ring.

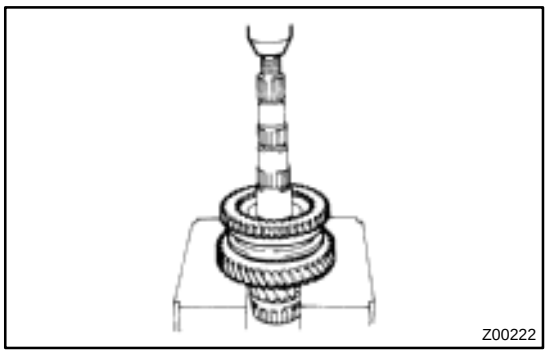

7. REMOVE NO.1 HUB SLEEVE ASSEMBLY AND 1ST GEAR

Using a press, remove the No.1 hub sleeve and 1st gear.

8. REMOVE SYNCHRONIZER RING AND NEEDLE ROLLER BEARING

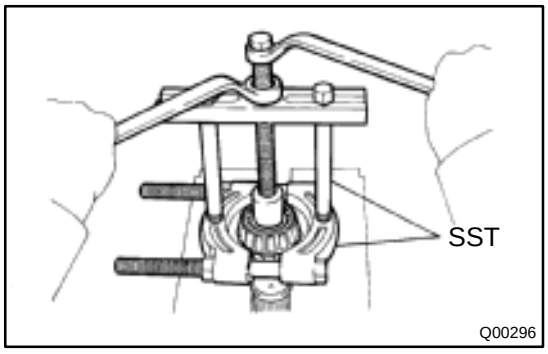

9. REMOVE OUTPUT SHAFT FRONT BEARING

Using SST, remove the output shaft front bearing.

SST 09950–00020, 09950–00030

MX05C–02

INSPECTION

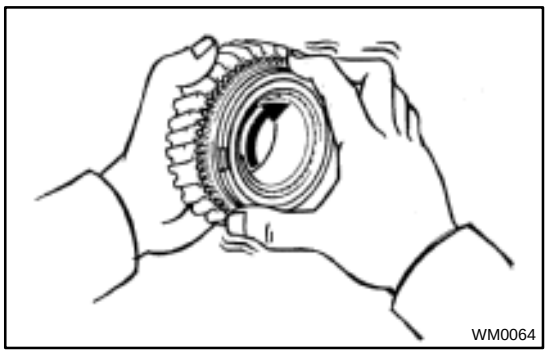
WM0064

1. INSPECT 1ST GEAR SYNCHRONIZER RING

(a) Check for wear or damage.

(b) Check the braking effect of the synchronizer ring. Turn the synchronizer ring in one direction while pushing it to the gear cone. Check that the ring locks.

If the braking effect is insufficient, apply a small amount of the fine lapping compound between the synchronizer ring and gear cone. Lightly rub the synchronizer ring and gear cone together.

NOTICE:

Ensure the fine lapping compound is completely washed off after rubbing.

(c) Check again the braking effect of the synchronizer ring.

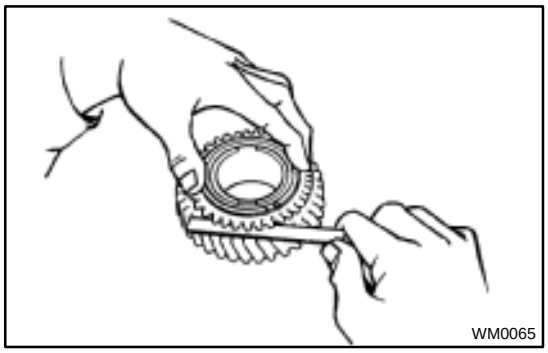
WM0065

(d) Using a feeler gauge, measure the clearance between the synchronizer ring back and gear spline end.

Minimum clearance:
0.8 mm (0.031 in.)

If the clearance is less than the minimum, replace the synchronizer ring, and apply a small amount of the fine lapping compound on gear cone.

NOTICE:

Ensure the fine lapping compound is completely washed off after rubbing.

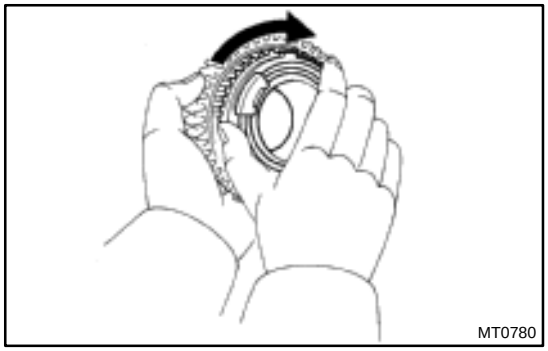
MT0780

2. INSPECT 2ND GEAR SYNCHRONIZER RING

(a) Check for wear or damage.

(b) Check the braking effect of the synchronizer ring. Turn the synchronizer ring in one direction while pushing it to the gear cone. Check that the ring locks.

If it does not lock, replace the synchronizer ring.

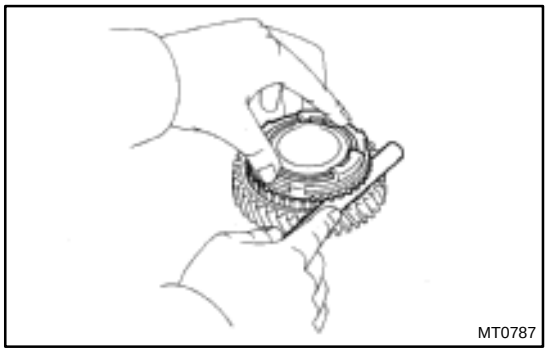
MT0787

(c) Using a feeler gauge, measure the clearance between the synchronizer ring back and gear spline end.

Minimum clearance:
0.7 mm (0.028 in.)

If the clearance is less than the minimum, replace the synchronizer ring.

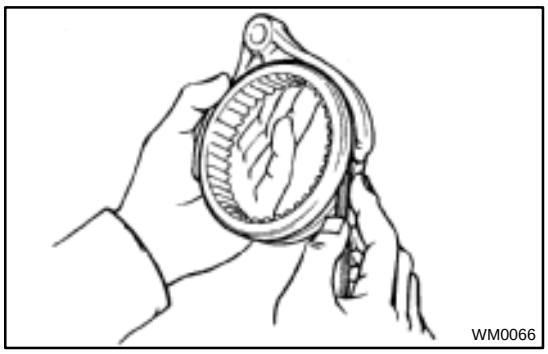
WM0066

3. MEASURE NO.1 SHIFT FORK AND HUB SLEEVE CLEARANCE

Using a feeler gauge, measure the clearance between the hub sleeve and shift fork.

Maximum clearance:
1.0 mm (0.039 in.)

If the clearance exceeds the maximum, replace the shift fork or hub sleeve.

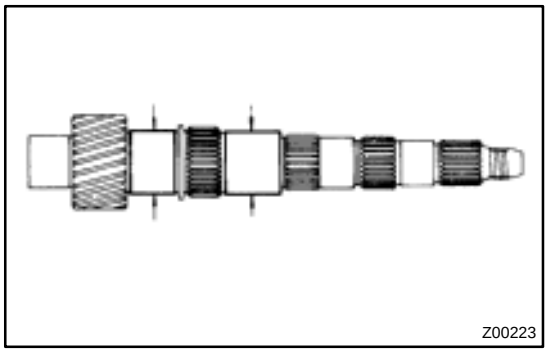
Z00223

4. INSPECT OUTPUT SHAFT

(a) Check the output shaft for wear or damage.

(b) Using a micrometer, measure the outer diameter of the output shaft journal surface.

Minimum outer diameter:
38.950 mm (1.5335 in.)

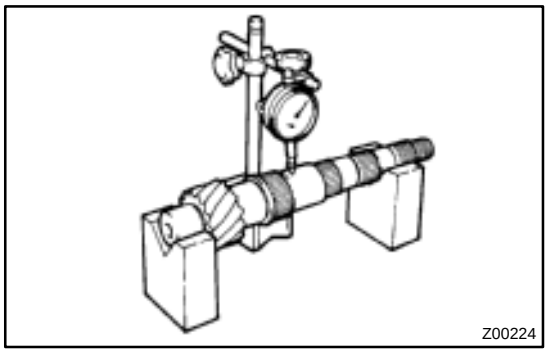
Z00224

(c) Using a dial indicator, check the shaft runout.

Maximum runout:
0.06 mm (0.0024 in.)

MX05D–01

REASSEMBLY

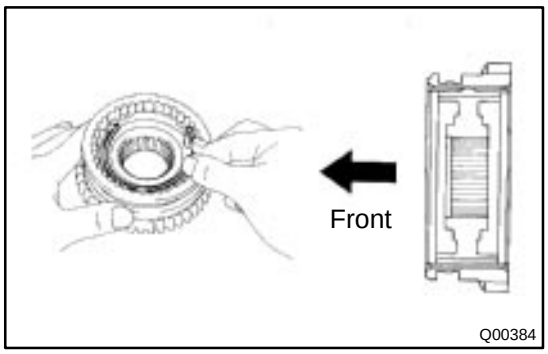

HINT:

Coat all of the sliding and rotating surfaces with gear oil before reassembly.

1. INSTALL NO.1 CLUTCH HUB INTO HUB SLEEVE

(a) Install the clutch hub and shifting keys to the hub sleeve.

(b) Install the shifting key springs under the shifting keys.

NOTICE:

Position the key springs so that their end gaps are not aligned.

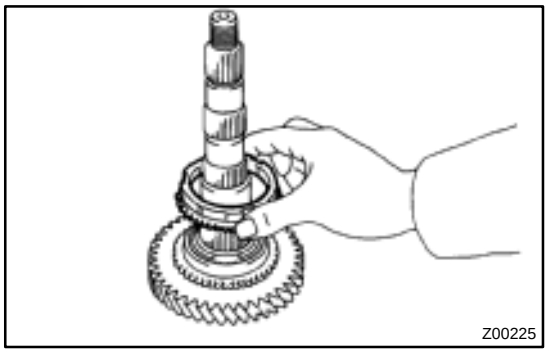

2. INSTALL NEEDLE ROLLER BEARING, 1ST GEAR, SYNCHRONIZER RING AND NO.1 HUB SLEEVE TO OUTPUT SHAFT

(a) Apply MP grease to the needle roller bearing.

(b) Install the 1st gear.

(c) Place the synchronizer ring (for the 1st gear) on the gear and align the ring slots with the shifting keys.

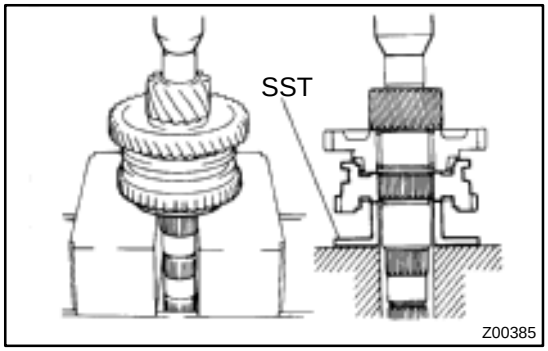

(d) Using SST and a press, install the 1st gear and No.1 hub sleeve.

SST 09316–60011 (09316–00041)

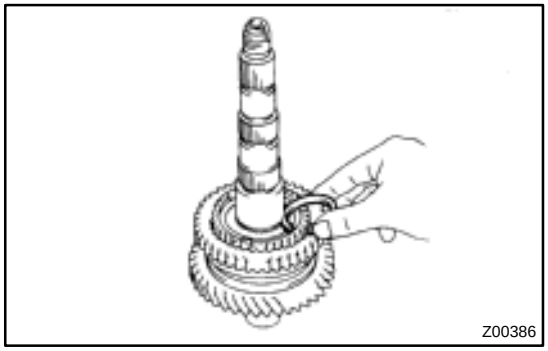

3. INSTALL SNAP RING

(a) Select a snap ring that allows the minimum axial play.

Mark	Thickness mm (in.)	Mark	Thickness mm (in.)
A	2.80 (0.1102)	E	3.00 (0.1181)
B	2.85 (0.1122)	F	3.05 (0.1201)
C	2.90 (0.1142)	G	3.10 (0.1220)
D	2.95 (0.1161)	–	–

(b) Using a snap ring expander, install the snap ring.

4. MEASURE 1ST GEAR THRUST CLEARANCE
(See page MX–31)

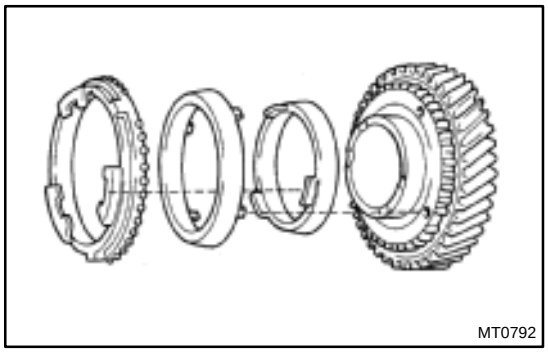
MT0792

5. INSTALL SPACER, NEEDLE ROLLER BEARING, SYNCHRONIZER RING, 2ND GEAR AND 3RD DRIVEN GEAR

(a) Install the spacer.
(b) Apply MP grease to the needle roller bearing.
(c) Place the synchronizer rings (for the 2nd gear) on the gear.

NOTICE:
Do not install the synchronizer ring for the 1st gear.

(d) Install the 2nd gear.
(e) Using a press, install the 3rd driven gear.

NOTICE:
Align the clutch hub grooves with the projections on the synchronizer ring.

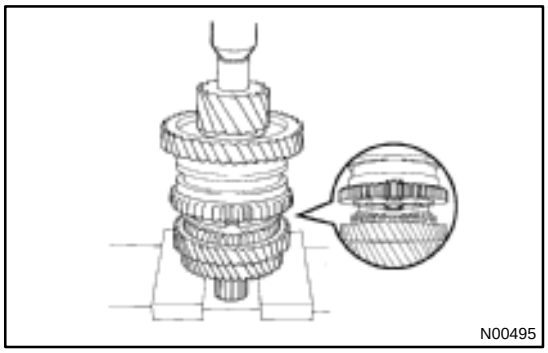
N00495

6. MEASURE 2ND GEAR THRUST CLEARANCE
(See page MX–31)

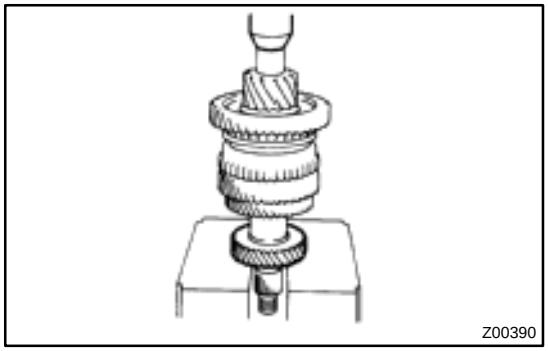
Z00390

7. INSTALL SPACER AND 4TH DRIVEN GEAR

(a) Install the spacer.
(b) Using a press, install the 4th driven gear.

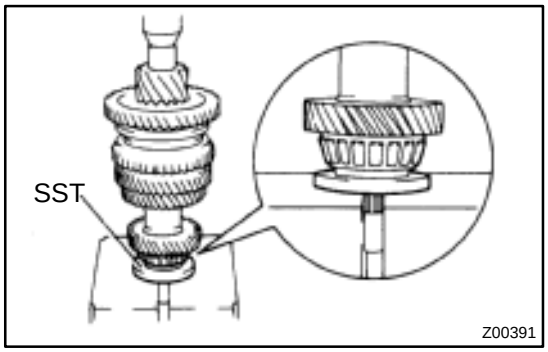

Z00391

8. INSTALL OUTPUT SHAFT REAR BEARING

Using SST and a press, install the bearing.
SST 09506–30012

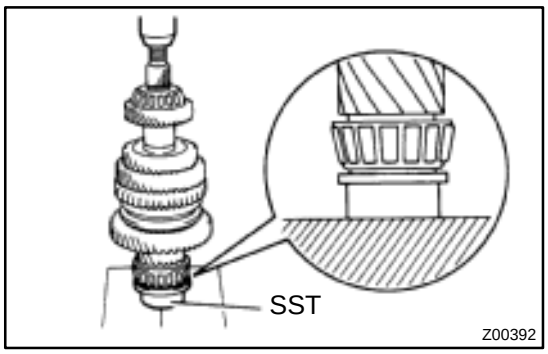

9. INSTALL OUTPUT SHAFT FRONT BEARING

Using SST and a press, install a new output shaft front bearing.

SST 09316–60011 (09316–00071)

OIL PUMP

COMPONENTS

MX05E–01

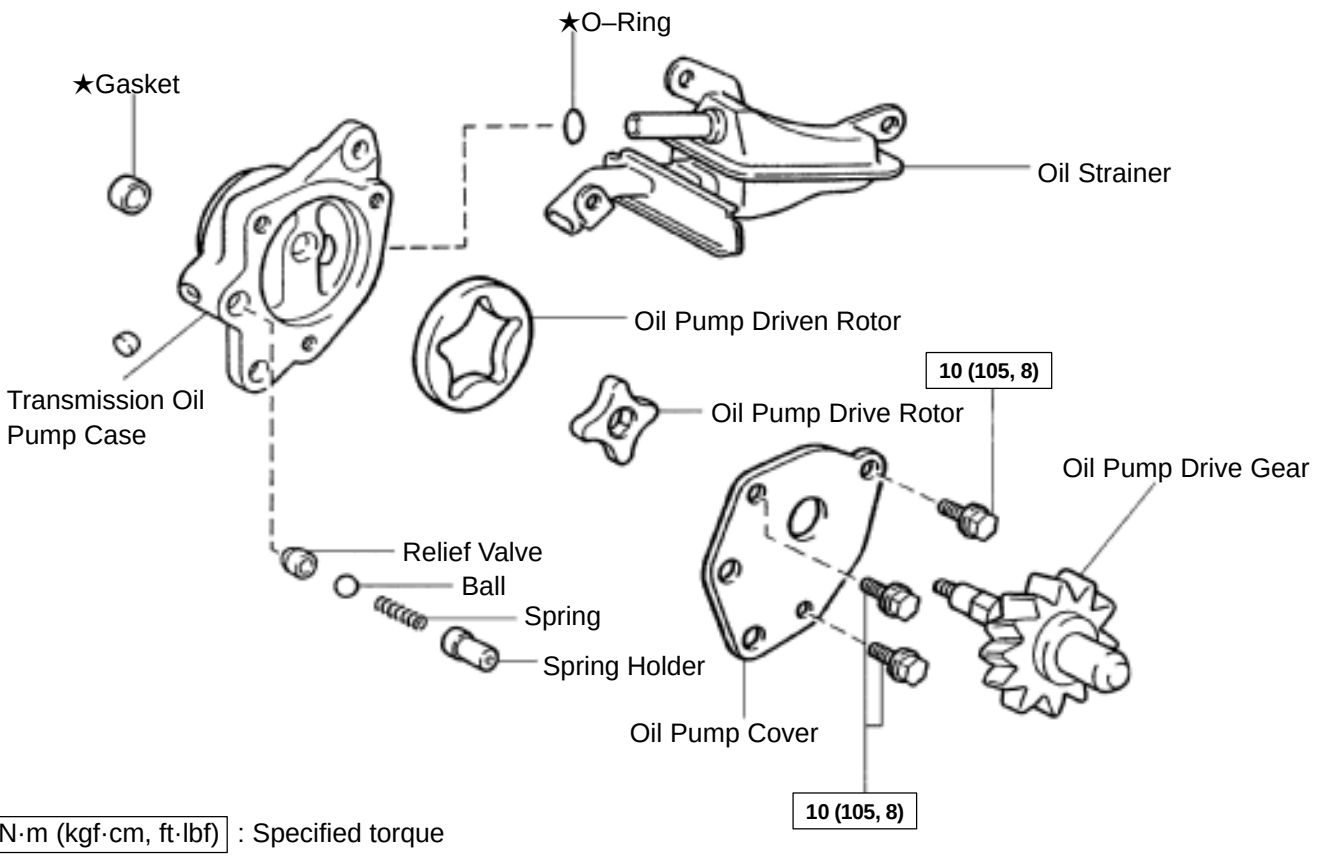

MX05F–01

INSPECTION

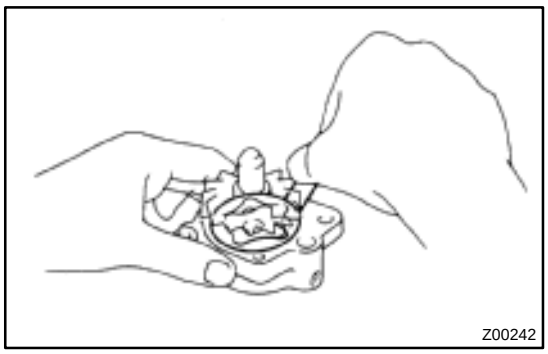

1. CHECK ROTOR BODY CLEARANCE

(a) Install the oil pump drive gear to the drive rotor.

(b) Using a feeler gauge, measure the body clearance between the drive rotor and oil pump case.

Standard clearance:
0.10 – 0.16 mm (0.0039 – 0.0063 in.)
Maximum clearance:
0.30 mm (0.0118 in.)

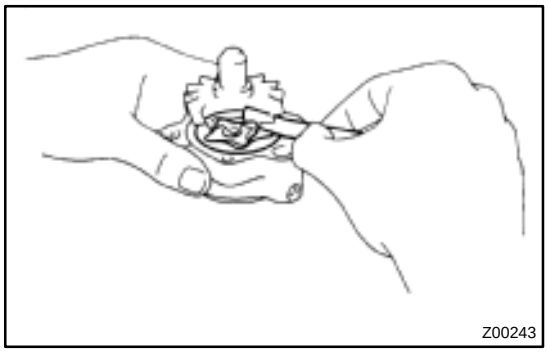

2. CHECK ROTOR TIP CLEARANCE

(a) Install the oil pump drive gear to the drive rotor.

(b) Using a feeler gauge, measure the tip clearance between the drive and driven rotors.

Standard clearance:
0.08 – 0.15 mm (0.0031 – 0.0059 in.)
Maximum clearance:
0.30 mm (0.0118 in.)

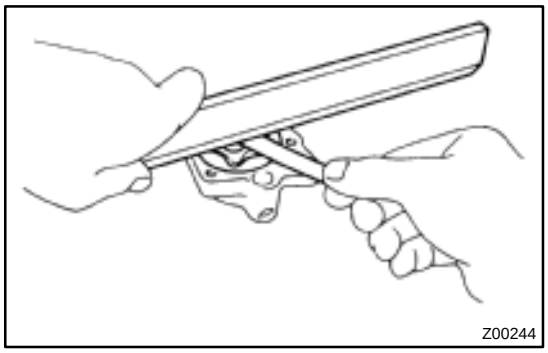

3. CHECK SIDE CLEARANCE

Using a precision straight edge and feeler gauge, measure the side clearance of both rotors.

Standard clearance:
0.03 – 0.08 mm (0.0012 – 0.0031 in.)
Maximum clearance:
0.15 mm (0.0059 in.)

SHIFT AND SELECT LEVER SHAFT

MX05G–02

COMPONENTS

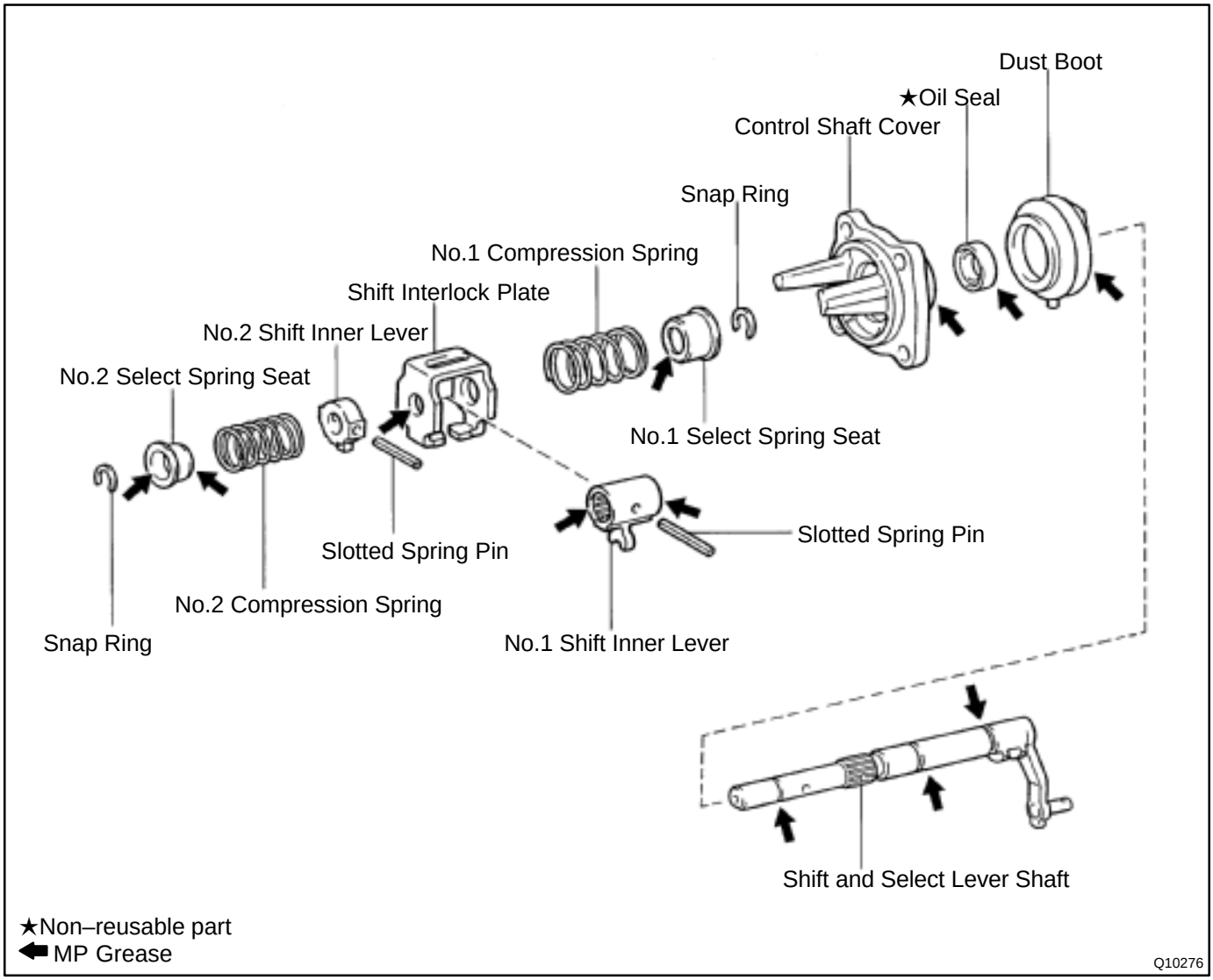

DIFFERENTIAL CASE

MX05H–01

COMPONENTS

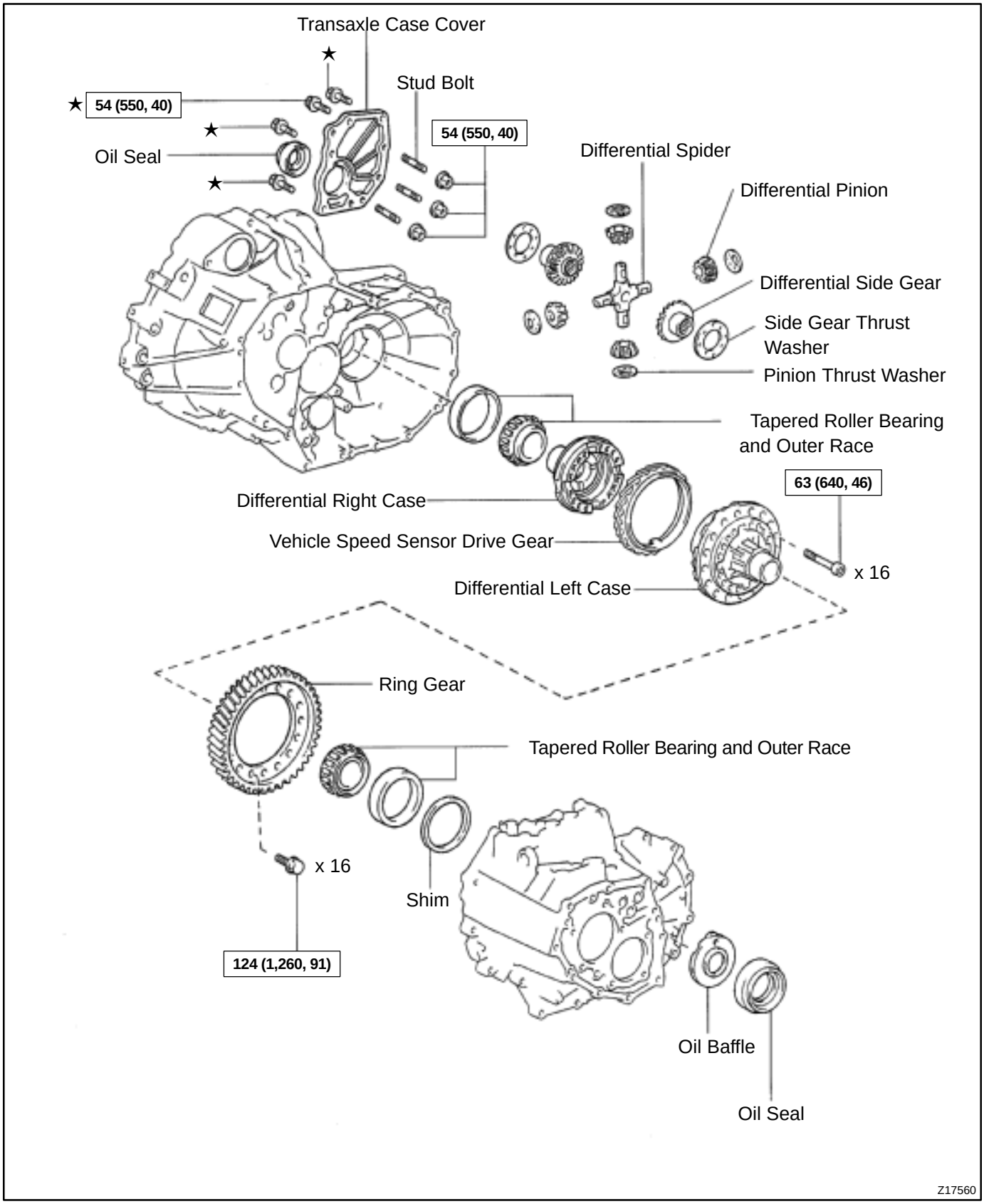

MX05I–03

DISASSEMBLY

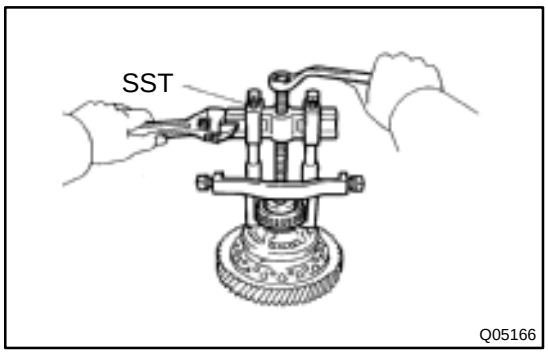

1. REMOVE TAPERED ROLLER BEARING

Using SST, remove the left and right bearings.

SST 09950–40011

2. REMOVE RING GEAR

(a) Place matchmarks on both the differential case and ring gear.
(b) Remove the 16 bolts.
(c) Using a plastic hammer, tap the ring gear and remove it.

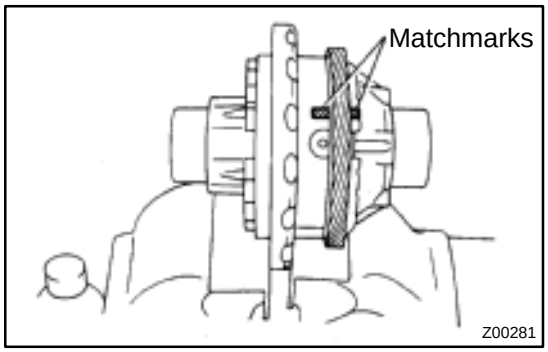

3. DISASSEMBLE DIFFERENTIAL CASE

(a) Place matchmarks on the differential right and left cases.
(b) Using a torx wrench (T50), remove the 16 torx screws.
(c) Using a plastic hammer, tap the differential left case.
(d) Remove the vehicle speed sensor drive gear from the differential right case.

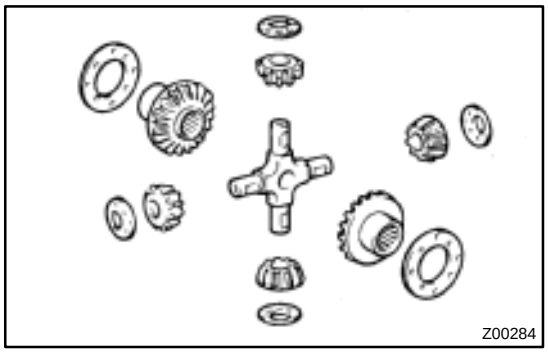

(e) Remove the 2 differential side gears, side gear thrust washers, 4 differential pinions and pinion thrust washers from the differential left case.

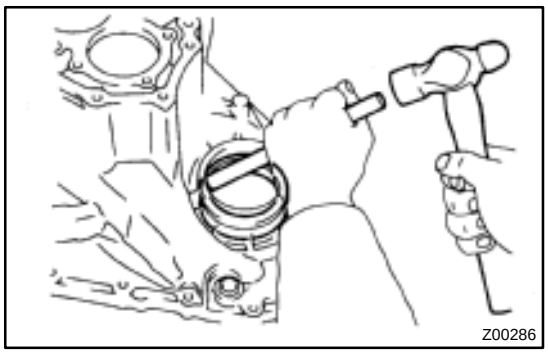

4. Transmission Case Side:
IF NECESSARY, REPLACE OIL SEAL AND TAPERED ROLLER BEARING OUTER RACE

(a) Using a screwdriver, remove the oil seal.
(b) Remove the oil baffle.
(c) Using a brass bar and hammer, drive out the bearing outer race lightly and evenly.
(d) Remove the shim.
(e) Install the shim. (See page MX–42)

HINT:

First select and install a shim of less thickness than before.

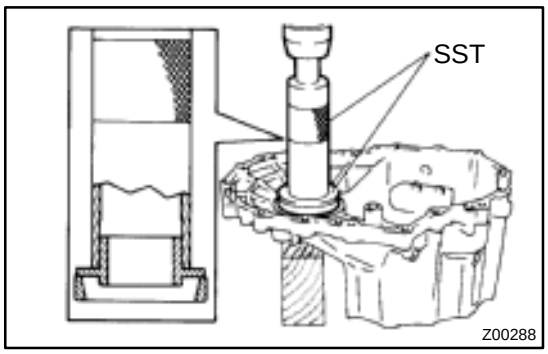

(f) Using SST and a press, install a new tapered roller bearing outer race.
SST 09316–60011 (09316–00011, 09316–00041)

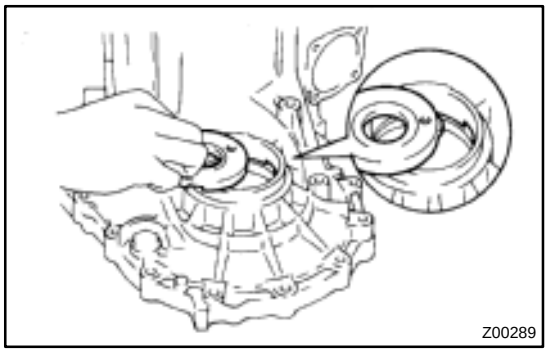

(g) Install the oil baffle.
HINT:
Install the oil baffle projection into the case side cutout.

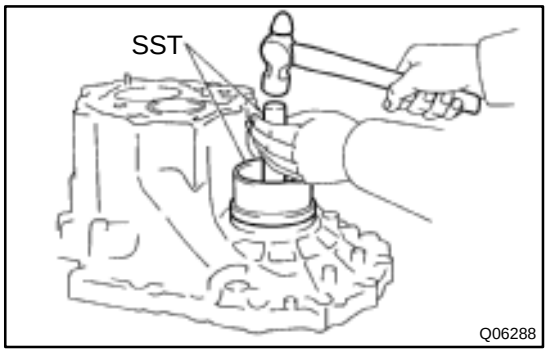

(h) Using SST and a hammer, drive in a new oil seal.
SST 09223–15020, 09950–70010 (09951–07150)
(i) Coat the lip of oil seal with MP grease.

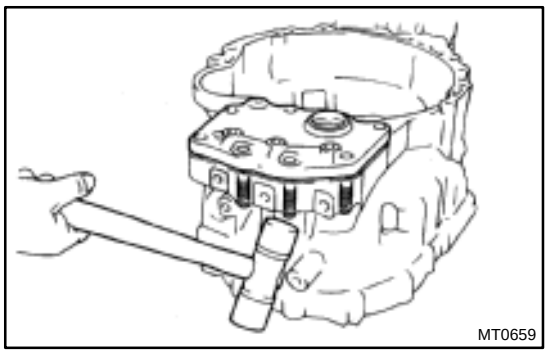

5. Transaxle Case Side:
IF NECESSARY, REPLACE OIL SEAL AND TAPERED ROLLER BEARING OUTER RACE
(a) Remove the 4 bolts and 3 nuts.
(b) Using a plastic hammer, tap the stud bolt and remove the transaxle case cover.
(c) Using a screwdriver and hammer, drive out the oil seal from the transaxle case cover.

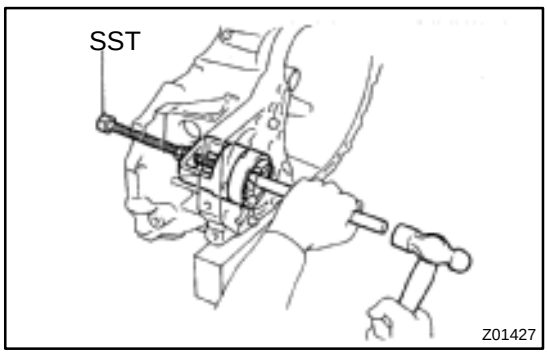

(d) Using SST, a brass bar and hammer, remove the tapered roller bearing outer race.
SST 09612–65014

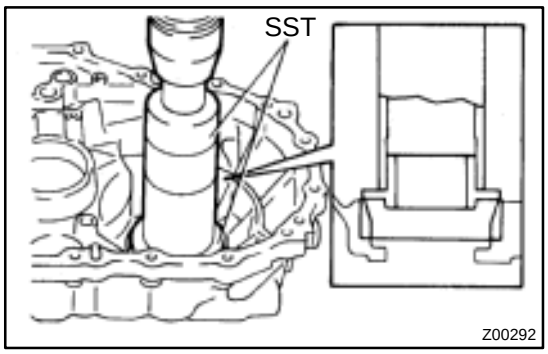

(e) Using SST and a press, install a new tapered roller bearing outer race.
SST 09316–60011 (09316–00011, 09316–00041)

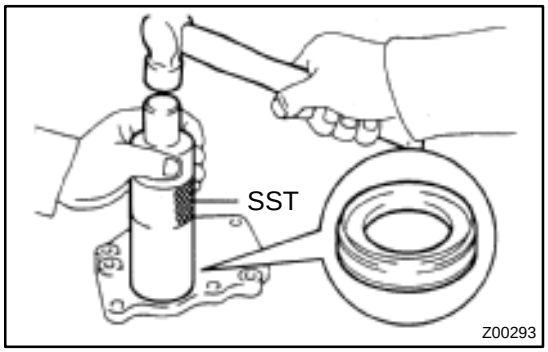

(f) Using SST and a hammer, drive in a new oil seal.
SST 09316–60011 (09316–00011)

(g) Coat the oil seal lip with MP grease.

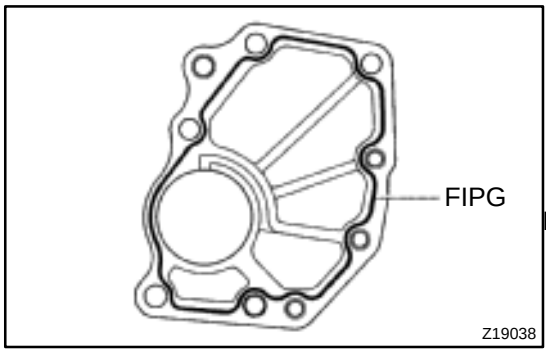

(h) Apply FIPG to the transaxle case cover, as shown.
FIPG:
Part No. 08826 – 00090, THREE BOND 1281 or equivalent

(i) Apply sealant to the bolt threads.
Sealant:
Part No.08833 – 00080, THREE BOND 1344, LOCTITE 242 or equivalent

(j) Install the stud bolt and cover to the transaxle case.

(k) Install and torque the 4 bolts and 3 nuts.
Torque: 54 N·m (550 kgf·cm, 40 ft·lbf)

MX05J–01

REASSEMBLY

1. ASSEMBLE DIFFERENTIAL CASE

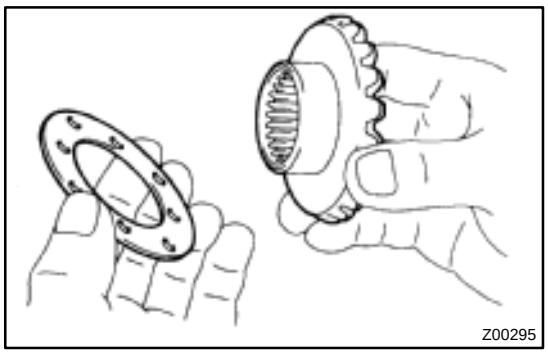
Z00295

HINT:

Coat all of the sliding and rotating surfaces with gear oil before reassembly.

(a) Install the thrust washer to the side gear.

(b) Install the 4 pinions and thrust washers to the spider.

(c) Install the side gear and spider with the 4 pinions to the differential left case.

(d) Using a dial indicator, measure the backlash of the pinion gear while holding the differential left case.

Standard backlash:

0.05 – 0.20 mm (0.0020 – 0.0079 in.)

HINT:

Push the pinion gear and spider with the 4 pinions to the differential left case.

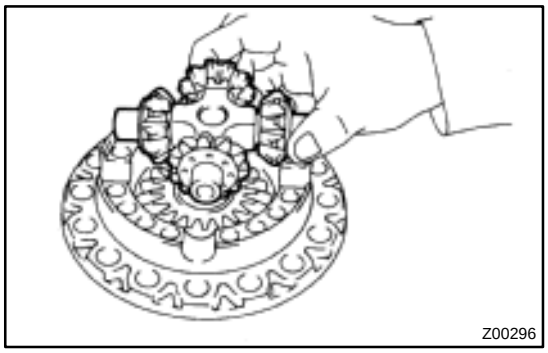
Z00296

(e) Install the side gear and spider with the 4 pinions to the right side of the differential case. Check the side gear backlash.

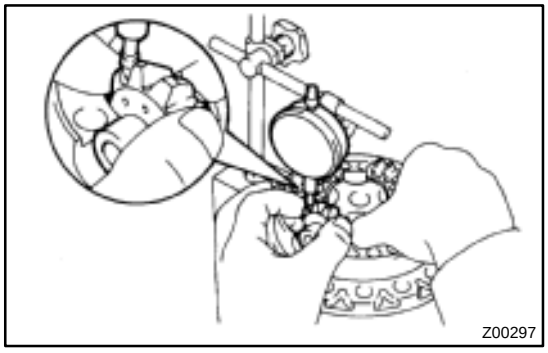
Z00297

(f) Refer to the table below, and select the thrust washer which will ensure that the backlash is within the specification. Try to select a washer of the same size.

Thickness mm (in.)	Thickness mm (in.)
0.80 (0.0315)	1.20 (0.0472)
0.90 (0.0354)	1.30 (0.0512)
1.00 (0.0394)	1.40 (0.0551)
1.10 (0.0433)	–

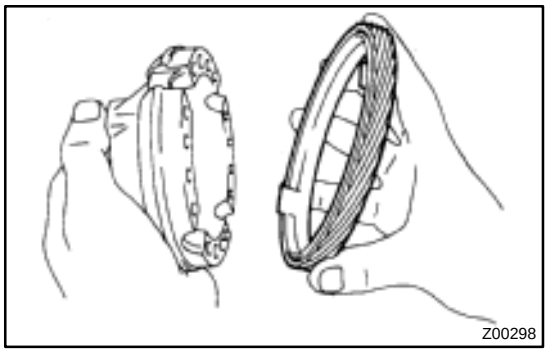
Z00298

(g) Install the vehicle speed sensor drive gear.

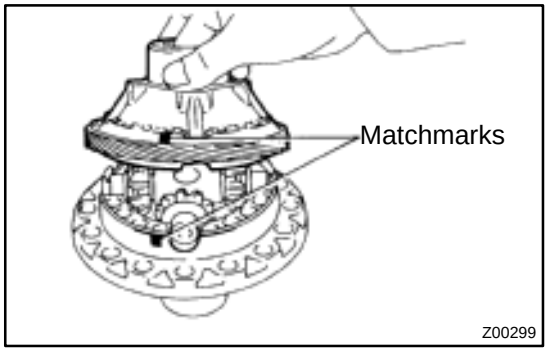

(h) Align the matchmarks on the differential cases.
(i) Using a plastic hammer, carefully tap the differential case to install it.
(j) Using a torx wrench (T50), install and torque the 16 torx screws.
Torque: 63 N·m (640 kgf·cm, 46 ft·lbf)

2. INSTALL RING GEAR

(a) Clean the contact surface of the differential case and the threads of the ring gear and differential case.
(b) Heat the ring gear in boiling water.
(c) Carefully remove the ring gear from the water.
(d) After the moisture on the ring gear has completely evaporated, quickly install the ring gear to the differential case.

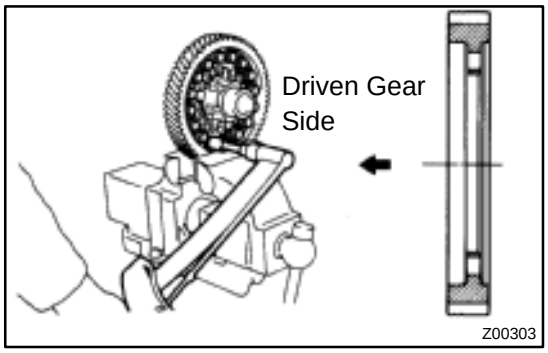

HINT:
Align the matchmarks on the differential left case.
(e) Temporarily install the 16 bolts.

NOTICE:
The ring gear set bolts should not be tightened until the ring gear has cooled sufficiently.

(f) After the ring gear has cooled sufficiently, torque the ring gear set bolts.
Torque: 124 N·m (1,260 kgf·cm, 91 ft·lbf)

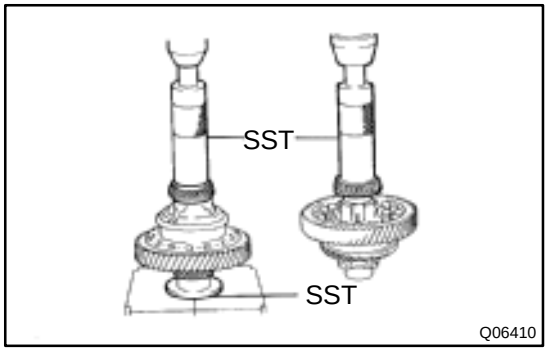

3. INSTALL TAPERED ROLLER BEARING

Using SST and a press, install new left and right bearings onto the differential case.
SST 09316–20011, 09316–60011 (09316–00011)

HINT:
Press the bearing on the ring side first.

4. ADJUST OUTPUT SHAFT ASSEMBLY PRELOAD
(See pages MX–22)

5. INSTALL DIFFERENTIAL CASE ASSEMBLY TO TRANSAXLE CASE

6. INSTALL OUTPUT SHAFT ASSEMBLY

Lift up the differential case and install the output shaft assembly.

7. INSTALL TRANSMISSION CASE

(a) Install the transmission case.

HINT:
If necessary, tap on the case with a plastic hammer.

(b) Install and torque the 17 bolts.
Torque: 29 N·m (300 kgf·cm 22 ft·lbf)

8. INSTALL OUTPUT SHAFT REAR TAPERED ROLLER BEARING OUTER RACE

Using a plastic hammer, drive in the outer race.

9. INSTALL SHIM (See pages MX–22)

HINT:

Install the previously selected shim.

10. INSTALL REAR BEARING RETAINER

Using a torx wrench (T45), install and torque the 7 torx screws.

Torque: 42 N·m (430 kgf·cm, 31 ft·lbf)

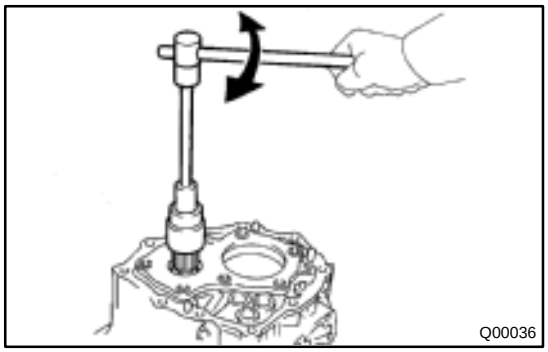
Q00036

11. ADJUST DIFFERENTIAL CASE SIDE BEARING PRELOAD

(a) Install a new lock nut to the output shaft.

(b) Turn the output shaft right and left 2 or 3 times to allow the bearings to settle.

(c) Using a torque wrench, measure the preload.

Preload (at starting):

New bearing (Output shaft preload plus)

0.2 – 0.3 N·m (1.8 – 3.5 kgf·cm, 1.6 – 3.0 in.·lbf)

Reused bearing (Output shaft preload plus)

0.1 – 0.2 N·m (1.1 – 2.2 kgf·cm, 1.0 – 1.9 in.·lbf)

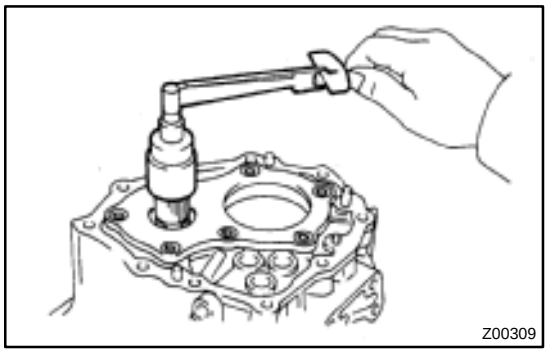
Z00309

If the preload is not within the specification, select an appropriate adjusting shim.

HINT:

The total preload will change by about 0.1 – 0.2 N·m (1 – 2 kgf·cm, 0.9 – 1.7 in.·lbf) with each 0.05 mm change in adjusting shim thickness.

Mark	Thickness mm (in.)	Mark	Thickness mm (in.)
0	2.00 (0.0787)	9	2.45 (0.0965)
1	2.05 (0.0807)	A	2.50 (0.0984)
2	2.10 (0.0827)	B	2.55 (0.1004)
3	2.15 (0.0846)	C	2.60 (0.1024)
4	2.20 (0.0866)	D	2.65 (0.1043)
5	2.25 (0.0886)	E	2.70 (0.1063)
6	2.30 (0.0906)	F	2.75 (0.1083)
7	2.35 (0.0925)	G	2.80 (0.1102)
8	2.40 (0.0945)	H	2.85 (0.1122)

12. REMOVE REAR BEARING RETAINER

Using a torx wrench (T45), remove the 7 torx screws and rear bearing retainer.

13. REMOVE SHIM

14. REMOVE TRANSMISSION CASE

(a) Remove the 17 bolts.

(b) Using a plastic hammer, tap the transmission case.

15. REMOVE OUTPUT SHAFT ASSEMBLY

16. REMOVE DIFFERENTIAL CASE ASSEMBLY

SHIFT LEVER AND CONTROL CABLE

MX05K–01

COMPONENTS

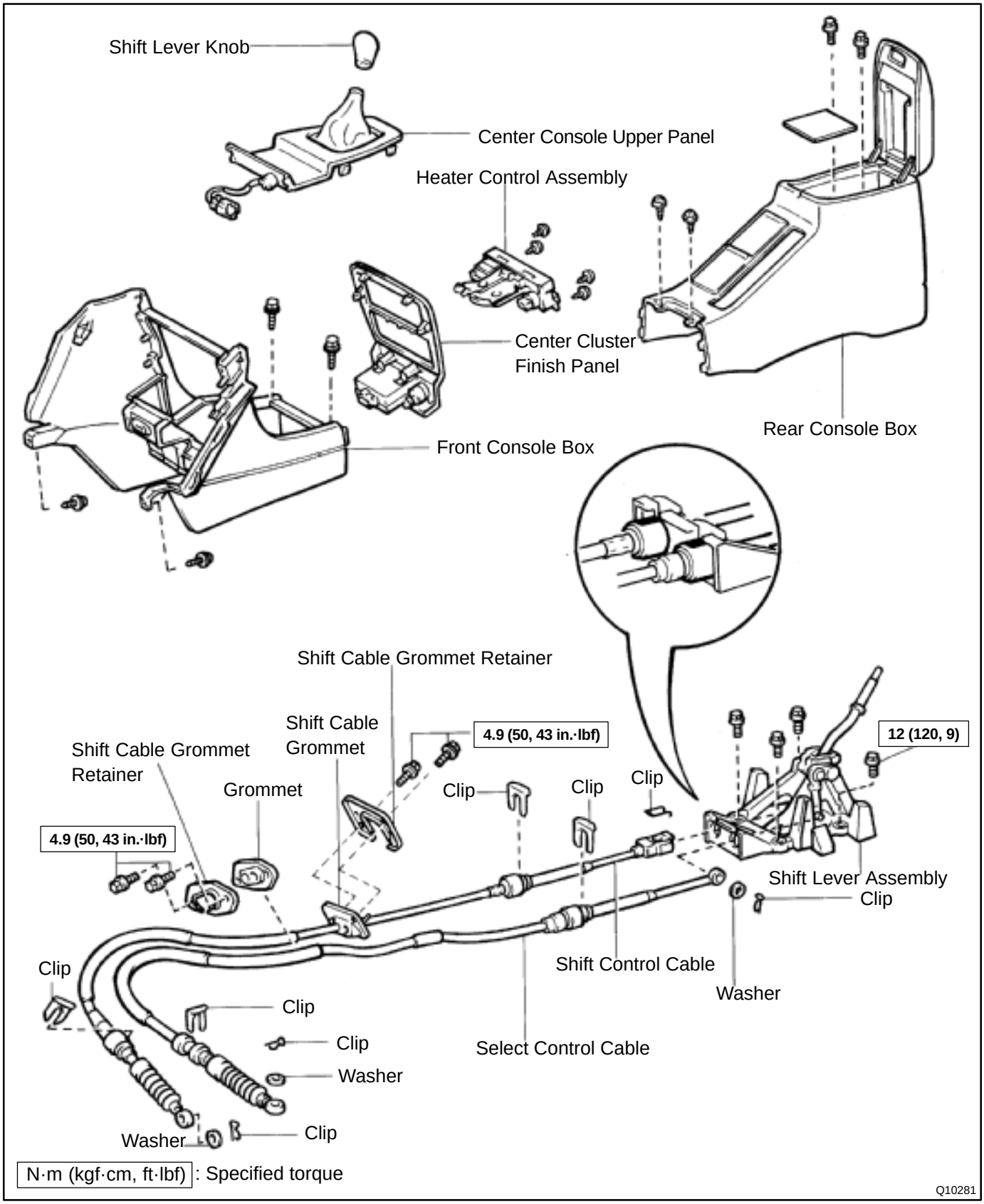

MAINTENANCE

EQUIPMENT

PP0E6–01

Mirror	Brake hose
Torque wrench	

ENGINE MECHANICAL (5S–FE)

PP0JQ–04

SST (Special Service Tools)

	09201–10000	Valve Guide Bushing Remover & Replacer Set	
	(09201–01060)	Valve Guide Bushing Remover & Replacer 6	
	09201–41020	Valve Stem Oil Seal Replacer	
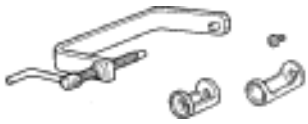	09202–70020	Valve Spring Compressor	
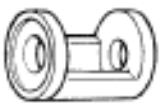	(09202–00010)	Attachment	
	09213–54015	Crankshaft Pulley Holding Tool	
	(91651–60855)	Bolt	Crankshaft pulley (Type A)
	09222–30010	Connecting Rod Bushing Remover & Replacer	
	09223–15030	Oil Seal & Bearing Replacer	Crankshaft rear oil seal
	09223–46011	Crankshaft Front Oil Seal Replacer	Camshaft oil seal
	09224–74010	Engine Balancer Backlash Adjusting Tool	
	09226–10010	Crankshaft Front & Rear Bearing Replacer	Crankshaft front oil seal

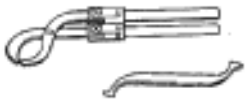	09248–55040	Valve Clearance Adjust Tool Set	
	(09248–05410)	Valve Lifter Press	
	(09248–05420)	Valve Lifter Stopper	
	09249–63010	Torque Wrench Adaptor	Camshaft timing pulley
	09330–00021	Companion Flange Holding Tool	Crankshaft pulley
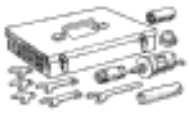	09612–24014	Steering Gear Housing Overhaul Tool Set	
	(09617–24011)	Steering Rack Wrench	Fuel inlet hose
	09843–18020	Diagnosis Check Wire	
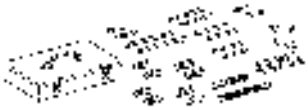	09950–50012	Puller C Set	
	(09951–05010)	Hanger 150	Crankshaft pulley Crankshaft timing pulley
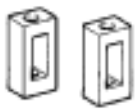	(09952–05010)	Slide Arm	Crankshaft pulley Crankshaft timing pulley
	(09953–05010)	Center Bolt 100	Crankshaft pulley Crankshaft timing pulley
	(09953–05020)	Center Bolt 150	Crankshaft pulley Crankshaft timing pulley

	(09954–05010)	Claw No.1	Crankshaft pulley (Type B) Crankshaft timing pulley
	(09954–05020)	Claw No.2	Crankshaft pulley (Type A)
	09950–70010	Handle Set	
	(09951–07100)	Handle 100	Valve guide bushing Crankshaft rear oil seal
	09960–10010	Variable Pin Wrench Set	
	(09962–01000)	Variable Pin Wrench Arm Assy	Camshaft timing pulley Oil pump pulley Camshaft sub–gear gear
	(09963–00500)	Pin 5	Oil pump pulley Camshaft sub–gear gear
	(09963–01000)	Pin 10	Camshaft timing pulley

PP0JR–04

RECOMMENDED TOOLS

	09090–04020	Engine Sling Device	For suspending engine
	09200–00010	Engine Adjust Kit .	
	09258–00030	Hose Plug Set .	Plug for vacuum hose, fuel hose etc.
	09904–00010	Expander Set .	

PP0JS–04

EQUIPMENT

Abrasive compound	Valve
Caliper gauge	
CO/HC meter	
Compression gauge	
Connecting aligner	
Cylinder gauge	
Dial indicator	
Dye penetrant	
Engine tune–up tester	
Groove cleaning tool	Piston ring groove
Heater	
Magnetic finger	
Micrometer	
OBDII scan tool	
Pin hole grinder	Piston pin hole of piston
Piston ring compressor	
Piston ring expander	
Plastigage	
Precision straight edge	
Press	
Ridge reamer	Cylinder
Soft brush	
Solvent	
Spring tester	Valve spring
Steel square	Valve spring
Thermometer	
Torque wrench	
Valve seat cutter	
V–block	
Vernier calipers	
Wire brush	Valve

PP1WA–02

SSM (Special Service Materials)

08826–00080	Seal Packing Black or equivalent (FIPG)	Camshaft bearing cap Cylinder head cover Semi–circular plug
08833–00070	Adhesive 1324, THREE BOND 1324 or equivalent	Flywheel or drive plate bolt Torque converter clutch bolt
08833–00080	Adhesive 1344 THREE BOND 1344 LOCTITE 242 or equivalent	Oil pressure switch

ENGINE MECHANICAL (1MZ–FE)

PP0BR–03

SST (Special Service Tools)

	09201–01055	Valve Guide Bushing Remover & Replacer 5.5	
	09201–41020	Valve Stem Oil Seal Replacer	
	09202–70020	Valve Spring Compressor	
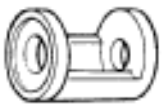	(09202–00010)	Attachment	
	09213–54015	Crankshaft Pulley Holding Tool	
	(91651–60855)	Bolt	
	09222–30010	Connecting Rod Bushing Remover & Replacer	
	09223–15030	Oil Seal & Bearing Replacer	Crankshaft rear oil seal
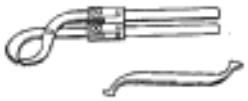	09248–55040	Valve Clearance Adjust Tool Set	
	(09248–05410)	Valve Lifter Press	
	(09248–05420)	Valve Lifter Stopper	
	09249–63010	Torque Wrench Adaptor	RH camshaft timing pulley

	09330–00021	Companion Flange Holding Tool	Crankshaft pulley
	09608–03071	Replacer	Spark plug tube gasket
	09816–30010	Oil Pressure Switch Socket	Knock sensor
	09843–18020	Diagnosis Check Wire	
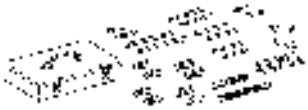	09950–50012	Puller C Set	
	(09951–05010)	Hanger 150	Crankshaft pulley Crankshaft timing pulley
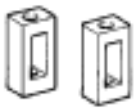	(09952–05010)	Slide Arm	Crankshaft pulley Crankshaft timing pulley
	(09953–05010)	Center Bolt 100	Crankshaft pulley Crankshaft timing pulley
	(09953–05020)	Center Bolt 150	Crankshaft pulley Crankshaft timing pulley
	(09954–05010)	Claw No.1	Crankshaft timing pulley
	(09954–05020)	Claw No.2	Crankshaft pulley
	09950–70010	Handle Set	
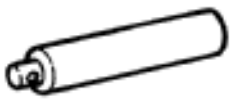	(09951–07100)	Handle 100	Valve guide bushing Crankshaft rear oil seal

	09960–10010	Variable Pin Wrench Set	
	(09962–01000)	Variable Pin Wrench Arm Assy	Camshaft timing pulley Camshaft sub–gear
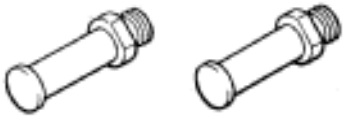	(09963–01000)	Pin 10	Camshaft timing pulley
	(09963–00500)	Pin 5	Camshaft sub–gear

PP0BS–03

RECOMMENDED TOOLS

	09040–00010	Hexagon Wrench Set .	
	09090–04020	Engine Sling Device	For suspending engine
	09200–00010	Engine Adjust Kit .	
	09258–00030	Hose Plug Set .	Plug for the vacuum hose, fuel hose etc.
	09904–00010	Expander Set .	

PP0BT–03

EQUIPMENT

Abrasive compound	
Caliper gauge	
CO/HC meter	
Connecting rod aligner	
Cylinder gauge	
Dial indicator	
Dye penetrant	
Engine tune–up tester	
Groove cleaning tool	
Heater	
Magnetic finger	
Micrometer	
OBDII scan tool	
Pin hole grinder	Piston pin hole
Piston ring compressor	
Piston ring expander	
Plastigage	
Precision straight edge	
Ridge reamer	
Soft brush	
Spring tester	Valve spring
Steel square	Valve spring
Thermometer	
Torque wrench	
Valve seat cutter	
Vernier calipers	
Wire brush	Valve

PP1WT–01

SSM (Special Service Materials)

08826–00080	Seal Packing Black or equivalent (FIPG)	Camshaft bearing cap Semi–circular plug Cylinder head cover Rear oil seal retainer
08826–00100	Seal Packing 1282B, THREE BOND 1282B or equivalent (FIPG)	Engine coolant drain union Water seal plate Water inlet housing
08833–00070	Adhesive 1324, THREE BOND 1324 or equivalent	Spark plug tube Drive plate bolt
08833–00080	Adhesive 1344 THREE BOND 1344 LOCTITE 242 or equivalent	No.1 idler pulley pivot bolt

EMISSION CONTROL (5S–FE)

PP0JU–04

SST (Special Service Tools)

	09843–18020 Diagnosis Check Wire	

PP0JV–04

EQUIPMENT

Torque wrench	
Hose clipper	
Pressure gauge	
Vacuum gauge	

EMISSION CONTROL (1MZ–FE)

PP0BV–03

EQUIPMENT

Hose clipper	
MITYVAC (Hand–held vacuum pump)	
Torque wrench	

SFI (5S–FE)

PP1WB–02

SST (Special Service Tools)

	09268–41047	Injection Measuring Tool Set	
	(09268–41100)	Clamp	Except California
	(09268–41110)	Adaptor	
	(90405–09015)	No.1 Union	
	09268–45014	EFI Fuel Pressure Gauge	
	(09268–41190)	Adaptor	
	(90405–06167)	I Union	
	09631–22020	Power Steering Hose Nut 14 x 17 mm Wrench Set	Fuel line flare nut
	09816–30010	Oil Pressure Switch Socket	Knock sensor 1
	09842–30070	Wiring ”F” EFI Inspection	
	09843–18020	Diagnosis Check Wire	

PP0JX–04

RECOMMENDED TOOLS

	09082–00040	TOYOTA Electrical Tester.	
	09258–00030	Hose Plug Set .	Plug for vacuum hose, fuel hose etc.

PP0JY–04

EQUIPMENT

Carburetor cleaner	Throttle body
Graduated cylinder	Injector
OBDII scan tool	
Soft brush	Throttle body
Sound scope	Injector
Torque wrench	
Vacuum gauge	

SFI (1MZ–FE)

PP1WW–01

SST (Special Service Tools)

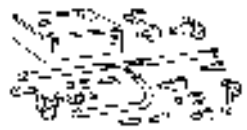	09268–41047	Injection Measuring Tool Set	
	(09268–41100)	Clamp	Except California
	(09268–41300)	Clamp	For California
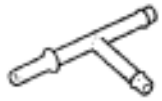	09268–41250	T Joint	
	09268–45012	EFI Fuel Pressure Gauge	
	09631–22020	Power Steering Hose Nut 14 x 17 mm Wrench Set	Fuel line flare nut
	09817–16011	Back–up Light Switch Tool	Knock sensor
	09842–30070	Wiring ”F” EFI Inspection	
	09843–18020	Diagnosis Check Wire	

PP1WX–01

RECOMMENDED TOOLS

	09040–00010	Hexagon Wrench Set .	
	09082–00040	TOYOTA Electrical Tester.	
	09200–00010	Engine Adjust Kit .	
	09258–00030	Hose Plug Set .	Plug for the vacuum hose, fuel hose etc.

PP1WY–01

EQUIPMENT

Carburetor cleaner	Throttle body
Graduated cylinder	Injector
OBD II scan tool	
Soft brush	Throttle body
Sound scope	Injector
Torque wrench	
Vacuum gauge	

PP1WZ–01

SSM (Special Service Materials)

	08826–00080	Seal Packing Black or equivalent (FIPG)	Intake air control valve

COOLING (5S–FE)

PP0JZ–05

SST (Special Service Tools)

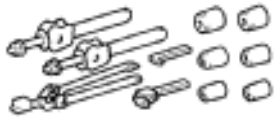	09230–01010	Radiator Service Tool Set	
	09231–14010	Punch	

PP0K0–03

RECOMMENDED TOOLS

	09082–00040 TOYOTA Electrical Tester.	

PP0K1–03

EQUIPMENT

Heater	ECT switch, Thermostat
Radiator cap tester	
Thermometer	ECT switch, Thermostat
Torque wrench	
Vernier calipers	

PP0K2–03

COOLANT

Item		Capacity	Classification
Engine coolant	w/ Oil cooler	6.9 liters (7.3 US qts, 6.1 lmp. qts)	”Toyota Long Life Coolant” or equivalent
	w/o Oil cooler	6.2 liters (6.5 US qts, 5.4 lmp. qts)	

COOLING (1MZ–FE)

PP1WU–01

SST (Special Service Tools)

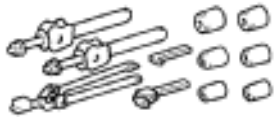	09230–01010	Radiator Service Tool Set	
	09231–14010	Punch	

PP0C1–03

RECOMMENDED TOOLS

	09082–00040 TOYOTA Electrical Tester.	

PP0C2–02

EQUIPMENT

Heater	ECT switch
Radiator cap tester	
Thermometer	ECT switch
Torque wrench	

PP0C3–04

COOLANT

Item	Capacity	Classification
Engine coolant	9.2 liters (9.7 US qts, 8.1 lmp. qts)	”Toyota Long Life Coolant” or equivalent

LUBRICATION (5S–FE)

PP0K3–04

SST (Special Service Tools)

	09032–00100	Oil Pan Seal Cutter	
	09228–06501	Oil Filter Wrench	
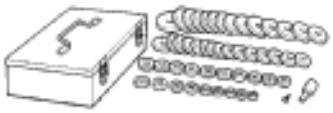	09950–60010	Replacer Set	
	(09951–00350)	Replacer 35	Oil pump oil seal
	09950–70010	Handle Set	
	(09951–07100)	Handle 100	Oil pump oil seal

PP0K4–04

RECOMMENDED TOOLS

	09200–00010	Engine Adjust Kit .	
	09905–00013	Snap Ring Pliers .	

PP0K5–04

EQUIPMENT

Oil pressure gauge	
Torque wrench	

PP0K6–04

LUBRICANT

Item		Capacity	Classification
Engine oil			API grade SJ, Energy–Conserving or ILSAC multigrade engine oil. SAE 5W–30 is the best choice for your vehicle, for good fuel economy, and good starting in cold weather
Dry fill	w/ Oil cooler	4.3 liters (4.5 US qts, 3.8 lmp.qts)	
	w/o Oil cooler	4.2 liters (4.4 US qts, 3.7 lmp.qts)	
Drain and refill			
	w/ Oil filter change	3.6 liters (3.8 US qts, 3.2 lmp.qts)	
	w/o Oil filter change	3.4 liters (3.6 US qts, 3.0 lmp.qts)	

PP1WC–01

SSM (Special Service Materials)

08826–00080	Seal Packing Black or equivalent (FIPG)	Oil pan
08833–00080	Adhesive 1344 THREE BOND 1344 LOCTITE 242 or equivalent	Oil pressure switch

LUBRICATION (1MZ–FE)

PP0C4–03

SST (Special Service Tools)

	09032–00100	Oil Pan Seal Cutter	No.2 oil pan
	09223–00010	Cover & Seal Replacer	Crankshaft front oil seal
	09228–07501	Oil Filter Wrench	
	09816–30010	Oil Pressure Switch Socket	

PP0C5–03

RECOMMENDED TOOLS

	09200–00010 Engine Adjust Kit .	

PP0C6–02

EQUIPMENT

Oil pressure gauge	
Precision straight edge	Oil pump
Torque wrench	

PP0C7–04

LUBRICANT

Item	Capacity	Classification
Engine oil		API grade SJ, Energy–Conserving or ILSAC
Dry fill	5.2 liters (5.5 US qts, 4.6 lmp. qts)	multigrade engine oil.
Drain and refill		SAE 5W–30 is the best choice for your vehicle,
w/ Oil filter change	4.7 liters (5.0 US qts, 4.1 lmp. qts)	for good fuel economy and good starting in cold
w/o Oil filter change	4.5 liters (4.8 US qts, 4.0 lmp. qts)	weather.

PP1WV–01

SSM (Special Service Materials)

08826–00080	Seal Packing Black or equivalent (FIPG)	Oil pump No.1 oil pan No.2 oil pan
08833–00080	Adhesive 1344 THREE BOND 1344 LOCTITE 242 or equivalent	Oil pressure switch

IGNITION (5S–FE)

PP0K8–04

RECOMMENDED TOOLS

	09082–00040	TOYOTA Electrical Tester.	
	09200–00010	Engine Adjust Kit .	

PP0K9–04

EQUIPMENT

Megger insulation resistance meter	Spark plug
Spark plug cleaner	

IGNITION (1MZ–FE)

PP0CF–03

RECOMMENDED TOOLS

	09082–00040	TOYOTA Electrical Tester.	
	09200–00010	Engine Adjust Kit .	

PP0CG–02

EQUIPMENT

Megger insulation resistance meter	Spark plug
Spark plug cleaner	

STARTING(5S–FE)

PP0KA–01

SST (Special Service Tools)

	09286–46011	Injection Pump Spline Shaft Puller	Armature bearing
	09810–38140	Starter Magnet Switch Nut Wrench 14	Terminal nut
	09820–00030	Alternator Rear Bearing Replacer	Armature front bearing

PP0KB–01

RECOMMENDED TOOLS

	09082–00040 TOYOTA Electrical Tester.	

PP0KC–01

EQUIPMENT

Dial indicator	Commutator
Magnetic finger	Steel ball
Press	Magnetic switch terminal kit part
Pull scale	Brush spring
Sandpaper	Commutator
Torque wrench	
V–block	Commutator
Vernier calipers	Commutator, Brush

STARTING (1MZ–FE)

PP0C9–01

SST (Special Service Tools)

	09286–46011	Injection Pump Spline Shaft Puller	Armature bearing
	09810–38140	Starter Magnet Switch Nut Wrench 14	Terminal nut
	09820–00030	Alternator Rear Bearing Replacer	Armature front bearing

PP0CA–01

RECOMMENDED TOOLS

	09082–00040 TOYOTA Electrical Tester.	

PP0CB–02

EQUIPMENT

Dial indicator	Commutator
Magnetic finger	Steel ball
Press	Magnetic switch terminal kit
Pull scale	Brush spring
Sandpaper	Commutator
Torque wrench	
V–block	Commutator
Vernier calipers	Commutator, Brush

CHARGING(5S–FE)

PP0KD–01

SST (Special Service Tools)

	09285–76010	Injection Pump Camshaft Bearing Cone Replacer	Rotor rear bearing cover
	09286–46011	Injection Pump Spline Shaft Puller	Rectifier end frame
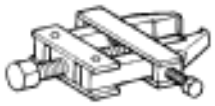	09820–00021	Alternator Rear Bearing Puller	
	09820–00030	Alternator Rear Bearing Replacer	Rotor rear bearing
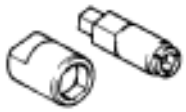	09820–63010	Alternator Pulley Set Nut Wrench Set	
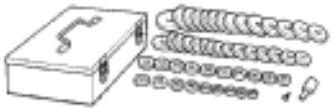	09950–60010	Replacer Set	
	(09951–00500)	Replacer 50	Rotor front bearing

PP0KE–01

RECOMMENDED TOOLS

	09082–00040 TOYOTA Electrical Tester.	

PP0KF–01

EQUIPMENT

Battery specific gravity gauge	Except maintenance free battery
Belt tension gauge	
Torque wrench	
Vernier calipers	Rotor (Slip ring), Brush

CHARGING (1MZ–FE)

PP0CC–01

SST (Special Service Tools)

	09285–76010	Injection Pump Camshaft Bearing Cone Replacer	Rotor rear bearing cover
	09286–46011	Injection Pump Spline Shaft Puller	Rectifier end frame
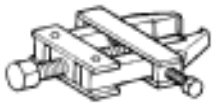	09820–00021	Alternator Rear Bearing Puller	
	09820–00030	Alternator Rear Bearing Replacer	Rotor rear bearing
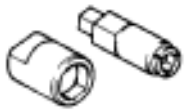	09820–63010	Alternator Pulley Set Nut Wrench Set	
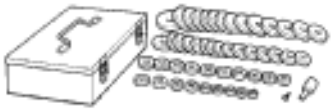	09950–60010	Replacer Set	
	(09951–00500)	Replacer 50	Rotor front bearing

PP0CD–01

RECOMMENDED TOOLS

	09082–00040 TOYOTA Electrical Tester.	

PP0CE–02

EQUIPMENT

Ammeter(A)	
Battery specific gravity gauge	Except maintenance free battery
Belt tension gauge	
Torque wrench	
Vernier calipers	Rotor (Slip ring), Brush

CLUTCH

SST (Special Service Tools)

PP0HC–01

	09023–00100	Union Nut Wrench 10 mm	Clutch line
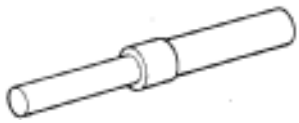	09301–00210	Clutch Guide Tool	5S–FE Engine
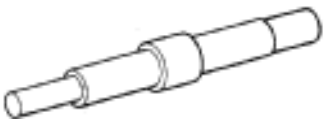	09301–00220	Clutch Guide Tool	1MZ–FE Engine
	09333–00013	Clutch Diaphragm Spring Aligner	

PP0HD–01

RECOMMENDED TOOLS

	09082–00040 TOYOTA Electrical Tester.	
	09905–00013 Snap Ring Pliers .	

PP0HE–01

EQUIPMENT

Calipers	
Dial indicator	
Torque wrench	

MANUAL TRANSAXLE (E153)

PP0H7–03

SST (Special Service Tools)

	09223–15020	Oil Seal & Bearing Replacer	Differential case oil seal
	09308–00010	Oil Seal Puller	Output shaft front bearing outer race
	09316–20011	Transfer Bearing Replacer	Differential case tapered roller bearing
	09316–60011	Transmission & Transfer Bearing Replacer	
	(09316–00011)	Replacer Pipe	
	(09316–00021)	Replacer ”A”	
	(09316–00041)	Replacer ”C”	1st gear No.1 hub sleeve Differential case tapered roller bearing outer race
	(09316–00071)	Replacer ”F”	Output shaft front bearing
	09506–30012	Differential Drive Pinion Rear Bearing Cone Replacer	Output shaft rear bearing
	09506–35010	Differential Drive Pinion Rear Bearing Replacer	No.2 hub sleeve 3rd gear Input shaft rear bearing
	09608–00081	Differential Side Bearing Cone Replacer	Input shaft oil seal
	09612–65014	Steering Worm Bearing Puller	Input shaft bearing Differential case tapered roller bearing outer race

	09950–00020	Bearing Remover	
	09950–00030	Bearing Remover Attachment	Output shaft front bearing
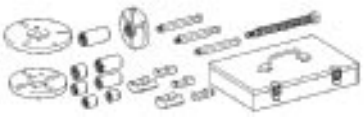	09950–30010	Puller A Set	5th driven gear No.3 clutch hub
	09950–40011	Puller B Set	Differential case tapered roller bearing
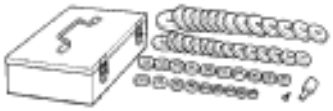	09950–60010	Replacer Set	
	(09951–00310)	Replacer 31	Control shaft cover oil seal Installation
	(09951–00580)	Replacer 58	Input shaft bearing
	09950–70010	Handle Set	
	(09951–07150)	Handle 150	

PP0H8–01

RECOMMENDED TOOLS

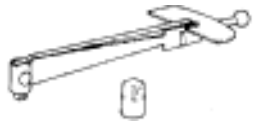	09025–00010	Torque Wrench (30 kgf–cm)	Differential preload
	09031–00030	Pin Punch .	
	09040–00010	Hexagon Wrench Set .	
	09042–00040	Torx Socket T50 .	
	09042–00050	Torx Socket T45 .	
	09090–04010	Engine Sling Device .	
	09905–00012	Snap Ring No.1 Expander .	

PP0H9–01

EQUIPMENT

Dial indicator with magnetic base	
Feeler gauge	
Micrometer	
Torque wrench	
Precision straight edge	
Magnetic finger	

PP0HA–01

LUBRICANT

Item	Capacity	Classification
Manual transaxle oil (w/ Differential oil)	4.2 liters (4.4 US qts, 3.7 Imp. qts)	API GL–4 or GL–5 SAE 75W–90

MANUAL TRANSAXLE (S51)

PP0H2–04

SST (Special Service Tools)

	09308–00010	Oil Seal Puller	Input shaft front bearing Output shaft front bearing
	09309–12020	5th Driven Gear Replacer	5th driven gear
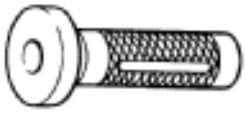	09310–35010	Countershaft Bearing Replacer	Input shaft front bearing Output shaft front bearing
	09316–60011	Transmission & Transfer Bearing Replacer	
	(09316–00011)	Replacer Pipe	3rd driven gear Differential side bearing
	(09316–00041)	Replacer ”C”	Output shaft thrust washer
	09350–32014	TOYOTA Automatic Transmission Tool Set	
	(09351–32120)	Overdrive Bearing Replacer	Differential side bearing
	(09351–32130)	Handle	Differential side bearing retainer oil seal Differential case oil seal (Transaxle case side)
	(09351–32150)	Oil Seal Replacer	Differential side bearing retainer oil seal Differential case oil seal (Transaxle case side)
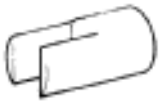	09564–32011	Differential Preload Adaptor	
	09608–00071	Drive Pinion Rear Bearing Cone Replacer	Input shaft rear bearing

	09608–00081	Differential Side Bearing Cone Replacer	Input shaft front oil seal
	09612–22011	Tilt Handle Bearing Replacer	Output shaft rear bearing No.3 clutch hub
	09950–00020	Bearing Remover	
	09950–00030	Bearing Remover Attachment	
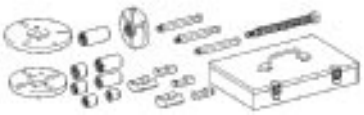	09950–30010	Puller A Set	No.3 clutch hub
	09950–40011	Puller B Set	5th driven gear
	09950–60020	Replacer Set No.2	Differential side bearing retainer oil seal Differential side bearing outer race
	(09951–00680)	Replacer 68	
	09950–70010	Handle Set	
	(09951–07150)	Handle 150	

PP0H3–01

RECOMMENDED TOOLS

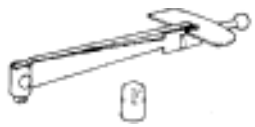	09025–00010	Torque Wrench (30 kgf–cm)	Differential preload
	09031–00030	Pin Punch .	
	09040–00010	Hexagon Wrench Set .	
	09090–04010	Engine Sling Device .	
	09905–00012	Snap Ring No.1 Expander .	

PP0H4–01

EQUIPMENT

Dial indicator	
Torque wrench	
Feeler gauge	
Magnetic finger	
Micrometer	

PP0H5–01

LUBRICANT

Item	Capacity	Classification
Manual transaxle oil (w/ Differential oil)	2.6 liters (2.7 US qts, 2.3 Imp. qts)	API GL–4 or GL–5 SAE 75W–90

AUTOMATIC TRANSAXLE (A140E)

PP0KG–01

SST (Special Service Tools)

	09308–00010	Oil Seal Puller	
	09350–32014	TOYOTA Automatic Transmission Tool Set	
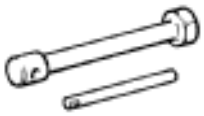	(09351–32010)	One–way Clutch Test Tool	
	(09351–32020)	Stator Stopper	
	(09351–32130)	Handle	
	(09351–32150)	Oil Seal Replacer	
	09992–00095	Automatic Transmission Oil Pressure Gauge Set	
	(09992–00231)	Adaptor C	
	(09992–00271)	Gauge Assy	

PP0KH–01

RECOMMENDED TOOLS

	09082–00040	TOYOTA Electrical Tester.	
	09090–04010	Engine Sling Device .	

PP0KI–01

EQUIPMENT

OBD II scan tool	
Torque wrench	
Hexagon wrench	
Dial indicator with magnetic base	Drive plate
Vernier calipers	Torque converter clutch
Straight edge	Torque converter clutch

PP0KJ–01

LUBRICANT

Item	Capacity	Classification
Automatic transaxle Dry fill Drain and refill	 5.6 liters (5.9 US qts, 4.9 Imp.qts) 2.5 liters (2.6 US qts, 2.2 Imp.qts)	 ATF D–II or DEXRON®III (DEXRON®II)
Differential oil	1.6 liters (1.7 US qts, 1.4 Imp.qts)	ATF D–II or DEXRON®III (DEXRON®II)

AUTOMATIC TRANSAXLE (A541E)

PP0M1–01

SST (Special Service Tools)

	09223–15020	Oil Seal & Bearing Replacer	
	09308–00010	Oil Seal Puller	Side gear shaft oil seal
	09316–60011	Transmission & Transfer Bearing Replacer	RH side bearing
	(09316–00011)	Replacer Pipe	RH side gear shaft oil seal
	09350–32014	TOYOTA Automatic Transmission Tool Set	
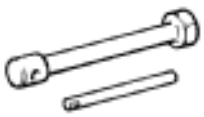	(09351–32010)	One–way Clutch Test Tool	
	(09351–32020)	Stator Stopper	
	(09351–32130)	Handle	
	09992–00095	Automatic Transmission Oil Pressure Gauge Set	Line pressure
	(09992–00231)	Adaptor C	
	(09992–00271)	Gauge Assy	

PP0M2–01

RECOMMENDED TOOLS

	09082–00040 TOYOTA Electrical Tester.	
	09090–04010 Engine Sling Device .	

PP0M3–01

EQUIPMENT

Straight edge	Torque converter clutch
Vernier calipers	Torque converter clutch
Dial indicator or dial indicator with magnetic base	Drive plate
Hexagon Wrench (10 mm)	
Torque wrench	
OBD II scan tool	

PP0M4–01

LUBRICANT

Item	Capacity	Classification
Automatic transaxle fluid (w/o Differential oil) Dry fill Drain and refill	 8.0 liters (8.5 US qts, 7.0 Imp. qts) 3.9 liters (4.1 US qts, 3.4 Imp. qts)	ATF D–II or DEXRON®III (DEXRON®II)

SUSPENSION AND AXLE

PP1WM–01

SST (Special Service Tools)

	09223–56010	Crankshaft Rear Oil Seal Replacer	Front drive shaft
	09240–00020	Wire Gauge Set	Front drive shaft
	09309–36010	Transmission Rear Bearing Replacer	Front drive shaft
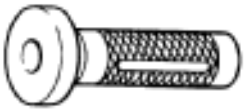	09310–35010	Countershaft Bearing Replacer	Front axle hub
	09316–20011	Transfer Bearing Replacer	Front drive shaft
	09316–60011	Transmission & Transfer Bearing Replacer	Front axle hub Front suspension
	(09316–00011)	Replacer Pipe	
	(09316–00041)	Replacer ”C”	
	09506–35010	Differential Drive Pinion Rear Bearing Replacer	Front drive shaft
	09520–00031	Rear Axle Shaft Puller	Front axle hub
	09521–24010	Drive Shaft Boot Clamping Tool	Front drive shaft
	09527–17011	Rear Axle Shaft Bearing Remover	Front axle hub

	09555–55010	Differential Drive Pinion Bearing Replacer	Front drive shaft
	09608–16042	Front Hub Bearing Adjusting Tool	Front drive shaft
	(09608–02021)	Bolt & Nut	
	(09608–02041)	Retainer	
	09608–32010	Steering Knuckle Oil Seal Replacer	Front axle hub Front suspension
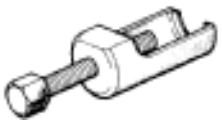	09610–20012	Pitman Arm Puller	Front axle hub
	09628–10011	Ball Joint Puller	Front axle hub Rear axle hub
	09628–62011	Ball Joint Puller	Front axle hub Front suspension
	09727–30021	Coil Spring Compressor	Front suspension Rear suspension
	09729–22031	Front Spring Upper Seat Holder	Front suspension
	09950–00020	Bearing Remover	Front axle hub Front drive shaft
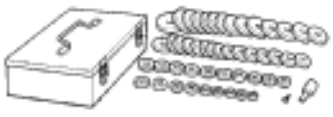	09950–60010	Replacer Set	Front axle hub
	(09951–00400)	Replacer 40	

	09950–70010 Handle Set	Front axle hub
	(09951–07100) Handle 100	

PP08W–01

RECOMMENDED TOOLS

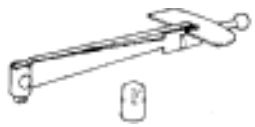	09025–00010	Torque Wrench (30 kgf–cm)	
	09042–00010	Torx Socket T30 .	
	09905–00012	Snap Ring No.1 Expander .	
	09905–00013	Snap Ring Pliers .	

PP08X–03

EQUIPMENT

Dial indicator	
Drill	
Torque wrench	

PP08Y–01

LUBRICANT

Item		Capacity	Application
5S–FE:			
Outboard joint grease	Color=Black	140 – 160 g (5.5 – 6.3 oz.)	
Inboard joint grease	Color=Yellow ocher	185 – 215 g (7.3 – 8.5 oz.)	
1MZ–FE:			
Outboard joint grease	Color=Black	105 – 125 g (3.7 – 4.4 oz.)	
Inboard joint grease	Color=Gray		
	Joint side	142.5 – 157.5 g (5.0 – 5.6 oz.)	
	Boot side	52.5 – 57.5 g (2.1 – 2.3 oz.)	

BRAKE

PP0I7–01

SST (Special Service Tools)

	09023–00100	Union Nut Wrench 10 mm	
	09703–30010	Brake Shoe Return Spring Tool	
	09709–29018	LSPV Gauge Set	
	09718–00010	Shoe Hold Down Spring Driver	
	09737–00010	Brake Booster Push Rod Gauge	
	09751–36011	Brake Line Union Nut 10 x 12 mm Wrench	
	09843–18020	Diagnosis Check Wire	
	09990–00150	ABS Actuator Checker and Sub–harness	DENSO type ABS, ABS & TRAC type
	09990–00163	ABS Actuator Checker Sheet ”A”	ABS & TRAC type
	09990–00250	ABS Actuator Checker Sub–harness ”G”	DENSO type ABS, ABS & TRAC type
	09990–00300	ABS Actuator Checker Sub–harness ”I”	DENSO type ABS
	09990–00360	ABS Actuator Checker Sub–harness ”L”	DENSO type ABS, ABS & TRAC type

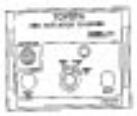	09990–00430	ABS Actuator Checker Sheet ”P”	DENSO type ABS
	09990–00450	ABS Actuator Checker Sub–harness ”P”	ABS & TRAC type

PP0I8–01

RECOMMENDED TOOLS

	09042–00030	Torx Socket T20 .	BOSCH type ABS
	09082–00040	TOYOTA Electrical Tester.	
	09905–00013	Snap Ring Pliers .	

PP0I9–03

EQUIPMENT

Torque wrench	
Micrometer	Brake disc
Dial indicator	Brake disc
Brake drum gauge	Brake drum and disc
Vernier calipers	Brake drum

PP0IA–01

LUBRICANT

Item	Capacity	Classification
Brake fluid	–	SAE J1703 or FMVSS No.116 DOT3

STEERING

PP0DB–03

SST (Special Service Tools)

	09249–63010	Torque Wrench Adaptor	PS vane pump
	09521–24010	Drive Shaft Boot Clamping Tool	PS gear
	09527–20011	Rear Axle Shaft Bearing Remover	PS gear
	09612–00012	Rack & Pinion Steering Rack Housing Stand	PS gear
	09612–22011	Tilt Handle Bearing Replacer	PS gear
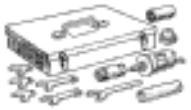	09612–24014	Steering Gear Housing Overhaul Tool Set	
	(09613–22011)	Steering Rack Shaft Bushing Puller	PS gear
	09616–00010	Steering Worm Bearing Adjusting Socket	PS gear
	09631–10021	Rack Stopper Wrench	PS gear
	09631–12071	Steering Rack Oil Seal Test Tool	PS gear
	09631–20081	Seal Ring Tool	PS gear
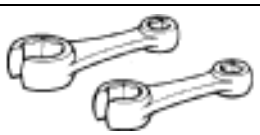	09631–22020	Power Steering Hose Nut 14 x 17 mm Wrench Set	PS vane pump PS gear

	09631–33010	Steering Rack Cover "I"	PS gear
	09633–00020	Power Steering Hose Nut Wrench	PS gear
	09640–10010	Power Steering Pressure Gauge Set	
	(09641–01010)	Gauge Assy	Power steering fluid
	(09641–01030)	Attachment B	Power steering fluid
	(09641–01060)	Attachment E	Power steering fluid
	09922–10010	Variable Open Wrench	PS gear
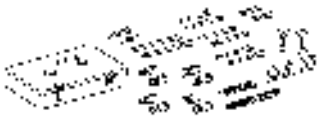	09950–50012	Puller C Set	
	(09951–05010)	Hanger 150	Tilt steering column
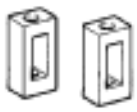	(09952–05010)	Slide Arm	Tilt steering column
	(09953–05020)	Center Bolt 150	Tilt steering column
	(09954–05020)	Claw No.2	Tilt steering column
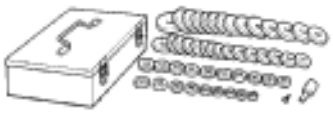	09950–60010	Replacer Set	

	(09951–00180) Replacer 18	PS gear
	(09951–00240) Replacer 24	PS gear
	(09951–00250) Replacer 25	PS gear
	(09951–00260) Replacer 26	PS gear
	(09951–00290) Replacer 29	PS gear
	(09951–00310) Replacer 31	PS gear
	(09951–00320) Replacer 32	PS gear
	(09951–00330) Replacer 33	PS vane pump
	(09951–00340) Replacer 34	PS gear
	(09951–00400) Replacer 40	PS gear
	(09951–00430) Replacer 43	PS gear
	(09952–06010) Adapter	PS gear
	09950–70010 Handle Set	

	(09951–07100)	Handle 100	PS vane pump
	(09951–07200)	Handle 200	PS gear
	(09951–07360)	Handle 360	PS gear
	09960–10010	Variable Pin Wrench Set	
	(09962–01000)	Variable Pin Wrench Arm Assy	PS vane pump
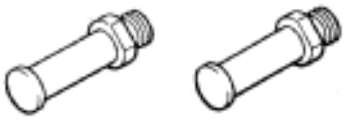	(09963–01000)	Pin 10	PS vane pump

PP0DC–03

RECOMMENDED TOOLS

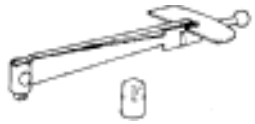	09025–00010	Torque Wrench (30 <kgfcm>) .	PS vane pump PS gear
	09042–00010	Torx Socket T30 .	Tilt steering column
	09904–00010	Expander Set .	
	09905–00012	Snap Ring No.1 Expander .	
	09905–00013	Snap Ring Pliers .	

PP0DD–05

EQUIPMENT

Belt tension gauge	On–vehicle inspection
Caliper gauge	PS vane pump
Calipers	PS vane pump
Dial indicator	PS gear
Feeler gauge	PS vane pump
Micrometer	PS vane pump
Torque wrench	

PP0DE–05

LUBRICANT

Item	Capacity	Classification
Power steering fluid Total	0.8 liters (0.8 US qts, 0.7 lmp.qts)	ATF DEXRON® II or III

PP1XK–01

SSM (Special Service Materials)

08833–00080	Adhesive 1344 THREE BOND 1344 LOCTITE 242 or equivalent	PS gear

SUPPLEMENTAL RESTRAINT SYSTEM

PP0MQ–01

SST (Special Service Tools)

	09082–00700	SRS Airbag Deployment Tool	
	09082–00750	Airbag Deployment Wire Sub–harness No.3	
	09082–00760	Airbag Deployment Wire Sub–harness No.4	
	09843–18020	Diagnosis Check Wire	

PP1XL–01

RECOMMENDED TOOLS

	09042–00020	Torx Socket T40 .	Airbag sensor assembly
	09082–00050	TOYOTA Electrical Tester Set.	
	09082–00040	TOYOTA Electrical Tester.	
	(09083–00150)	Test Lead Set	Seat belt pretensioner connector

PP0MS–01

EQUIPMENT

Torque wrench	
Bolt: Length: 35 mm (1.38 in.) Pitch: 1.0 mm (0.039 in.) Diam.: 6.0 mm (0.236 in.)	Airbag disposal
Tire Width: 185 mm (7.28 in.) Inner diam.: 360mm (14.17 in.)	Airbag disposal
Tire with disc wheel Width: 185 mm (7.28 in.) Inner diam.: 360 mm (14.17 in.)	Airbag disposal
Vinyl bag	Airbag disposal

BODY ELECTRICAL

PP0KY–01

SST (Special Service Tools)

	09843–18020 Diagnosis Check Wire	

PP0KZ–01

RECOMMENDED TOOLS

	09082–00040	TOYOTA Electrical Tester.	
	09041–00030	Torx Driver T30 .	For removing and installing steering wheel pad
	09042–00010	Torx Socket T30 .	For removing and installing steering wheel pad

PP0L0–01

EQUIPMENT

Voltmeter	
Ammeter	
Ohmmeter	
Test lead	
Syphon	Brake fluid level warning switch
Bulb (3.4 W)	Fuel sender gauge, Seat belt warning relay
Bulb (21 W)	Turn signal flasher relay
Dry cell battery	Fuel sender gauge
Torque wrench	
Masking tape	Rear window defogger wire
Tin foil	Rear window defogger wire

BODY

PP0MU–01

SST (Special Service Tools)

	09804–24010	Luggage Compartment Door Torsion Bar Tool	
	09812–00020	Door Hinge Set Bolt Wrench	

PP0MV–01

EQUIPMENT

Clip remover	
Torque wrench	
Drill	
Drill bit, diam 3.2 mm (0.126 in.)	
Hand riveter	
Tape	To avoid surface damage
Adhesive tape	To avoid surface damage
Adhesive	
Cleaner	
Shop rag	Regulator handle
Water pump pliers	Window regulator
Knife	Moulding
Heat light	Moulding
Piano wire	Windshield
Rope (no projections, difficult to break)	Seat belt pretensioner disposal
Tire Width: 185 mm (7.28 in.) Inner diam: 360 mm (14.17 in.)	Seatbelt pretensioner disposal
Tire with disc wheel Width: 185 mm (7.28 in.) Inner diam 360 mm (14.17 in.)	Seat belt pretinsioner disposal
Vinyl bag	Seat belt pretensioner disposal

PP0MW–01

LUBRICANT

Item	Capacity	Classification
MP grease	–	–

AIR CONDITIONING

PP1XJ–01

SST (Special Service Tools)

	07110–58060	Air Conditioner Service Tool Set	
	(07117–58060)	Refrigerant Drain Service Valve	
	(07117–58070)	T–Joint	
	(07117–58080)	Quick Disconnect Adapter	Discharge (diam. 16 mm)
	(07117–58090)	Quick Disconnect Adapter	Suction (diam. 13 mm)
	(07117–78050)	Refrigerant Charging Gauge	
	(07117–88060)	Refrigerant Charging Hose	Discharge (Red)
	(07117–88070)	Refrigerant Charging Hose	Suction (Blue)
	(07117–88080)	Refrigerant Charging Hose	Utility (Green)
	07112–66040	Magnetic Clutch Remover	
	07112–76060	Magnetic Clutch Stopper	
	07114–84010	Snap Ring Pliers	

	07114–84020	Snap Ring Pliers	
	07116–38360	Gas Leak Detector Assembly	
	09870–00015	A/C Quick Joint Puller No.1	Suction tube
	09870–00025	A/C Quick Joint Puller No.2	Liquid tube

PP0B7–01

RECOMMENDED TOOLS

	09082–00040 TOYOTA Electrical Tester.	
	09216–00021 Belt Tension Gauge .	

PP0B8–02

EQUIPMENT

Voltmeter	
Ammeter	
Ohmmeter	
Test lead	
Thermometer	Thermistor, ECT switch
Torque wrench	
Dial indicator	Magnetic clutch
Plastic hammer	Magnetic clutch

PP0B9–02

LUBRICANT

Item	Capacity	Classification
Compressor oil	–	ND–OIL 8 or equivalent
When replacing receiver	20 cc (0.71 fl.oz.)	
When replacing condenser	40 – 50 cc (1.4 – 1.7 fl.oz.)	
When replacing evaporator	40 – 50 cc (1.4 – 1.7 fl.oz.)	
When replacing compressor	120 cc (4.1 fl.oz.)	

STANDARD BOLT

HOW TO DETERMINE BOLT STRENGTH

SS0ZS–01

Bolt Type				Class
Hexagon Head Bolt		Stud Bolt	Weld Bolt	
Normal Recess Bolt	Deep Recess Bolt			
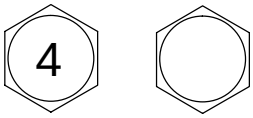 No Mark	 No Mark	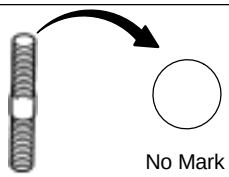 No Mark		4T
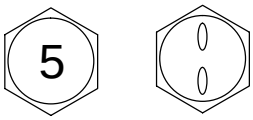	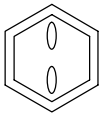			5T
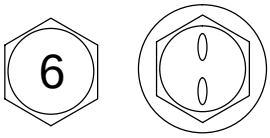 w/ Washer	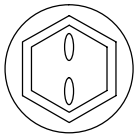 w/ Washer			6T
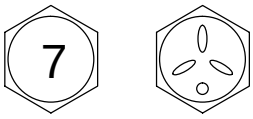	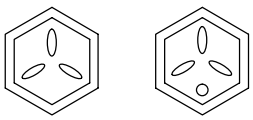			7T
				8T
				9T
	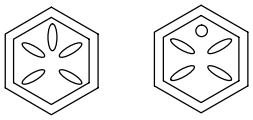			10T
	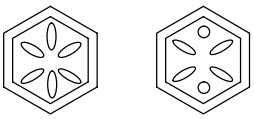			11T

B06431

SS0ZT–01

SPECIFIED TORQUE FOR STANDARD BOLTS

Class	Diameter mm	Pitch mm	Specified torque					
			Hexagon head bolt			Hexagon flange bolt		
			N·m	kgf·cm	ft·lbf	N·m	kgf·cm	ft·lbf
4T	6	1	5	55	48 in.·lbf	6	60	52 in.·lbf
	8	1.25	12.5	130	9	14	145	10
	10	1.25	26	260	19	29	290	21
	12	1.25	47	480	35	53	540	39
	14	1.5	74	760	55	84	850	61
	16	1.5	115	1,150	83	–	–	–
5T	6	1	6.5	65	56 in.·lbf	7.5	75	65 in.·lbf
	8	1.25	15.5	160	12	17.5	175	13
	10	1.25	32	330	24	36	360	26
	12	1.25	59	600	43	65	670	48
	14	1.5	91	930	67	100	1,050	76
	16	1.5	140	1,400	101	–	–	–
6T	6	1	8	80	69 in.·lbf	9	90	78 in.·lbf
	8	1.25	19	195	14	21	210	15
	10	1.25	39	400	29	44	440	32
	12	1.25	71	730	53	80	810	59
	14	1.5	110	1,100	80	125	1,250	90
	16	1.5	170	1,750	127	–	–	–
7T	6	1	10.5	110	8	12	120	9
	8	1.25	25	260	19	28	290	21
	10	1.25	52	530	38	58	590	43
	12	1.25	95	970	70	105	1,050	76
	14	1.5	145	1,500	108	165	1,700	123
	16	1.5	230	2,300	166	–	–	–
8T	8	1.25	29	300	22	33	330	24
	10	1.25	61	620	45	68	690	50
	12	1.25	110	1,100	80	120	1,250	90
9T	8	1.25	34	340	25	37	380	27
	10	1.25	70	710	51	78	790	57
	12	1.25	125	1,300	94	140	1,450	105
10T	8	1.25	38	390	28	42	430	31
	10	1.25	78	800	58	88	890	64
	12	1.25	140	1,450	105	155	1,600	116
11T	8	1.25	42	430	31	47	480	35
	10	1.25	87	890	64	97	990	72
	12	1.25	155	1,600	116	175	1,800	130

SS0ZU–01

HOW TO DETERMINE NUT STRENGTH

Nut Type			Class
Present Standard Hexagon Nut	Old Standard Hexagon Nut		
	Cold Forging Nut	Cutting Processed Nut	
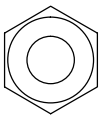 No Mark			4N
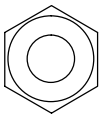 No Mark (w/ Washer)	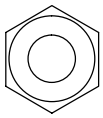 No Mark (w/ Washer)	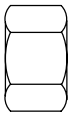 No Mark	5N (4T)
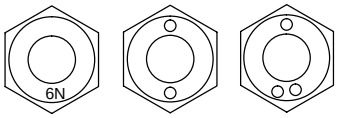 6N			6N
	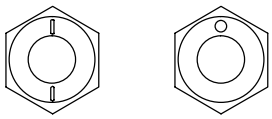	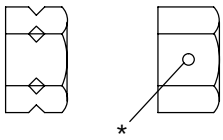 *	7N (5T)
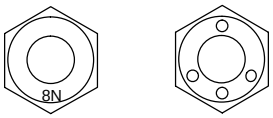 8N			8N
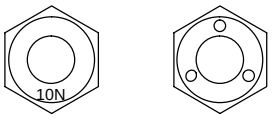 10N	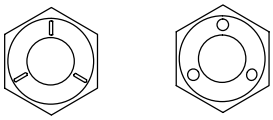	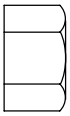 No Mark	10N (7T)
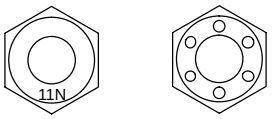 11N			11N
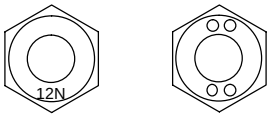 12N			12N

*: Nut with 1 or more marks on one side surface of the nut.

B06432

HINT:

Use the nut with the same number of the nut strength classification or the greater than the bolt strength classification number when tightening parts with a bolt and nut.

Example: Bolt = 4T

Nut = 4N or more

MAINTENANCE

SS074–01

SERVICE DATA

Front axle and suspension		
Ball joint vertical play	Maximum	0 mm (0 in.)

SS075–01

TORQUE SPECIFICATION

Part tightened	N·m	kgf·cm	ft·lbf
Front seat mount bolts	37	375	27
Front suspension member x Body	181	1,850	134
Rear suspension member x Body	51	520	38

ENGINE MECHANICAL (5S–FE)

SS0AD–03

SERVICE DATA

Compression pressure		at 250 rpm STD	1,226 kPa (12.5 kgf/cm^2, 178 psi) or more
		Minimum	981 kPa (10.0 kgf/cm^2, 142 psi)
	Difference of pressure between each cylinder		98 kPa (1.0 kgf/cm^2, 14 psi) or less
Valve clearance		at cold Intake	0.19 – 0.29 mm (0.007 – 0.011 in.)
		Exhaust	0.28 – 0.38 mm (0.011 – 0.015 in.)
	Adjusting shim (for repair part)	Mark 2.500	2.500 mm (0.0984 in.)
		Mark 2.550	2.550 mm (0.1004 in.)
		Mark 2.600	2.600 mm (0.1024 in.)
		Mark 2.650	2.650 mm (0.1043 in.)
		Mark 2.700	2.700 mm (0.1063 in.)
		Mark 2.750	2.750 mm (0.1083 in.)
		Mark 2.800	2.800 mm (0.1102 in.)
		Mark 2.850	2.850 mm (0.1122 in.)
		Mark 2.900	2.900 mm (0.1142 in.)
		Mark 2.950	2.950 mm (0.1161 in.)
		Mark 3.000	3.000 mm (0.1181 in.)
		Mark 3.050	3.050 mm (0.1201 in.)
		Mark 3.100	3.100 mm (0.1220 in.)
		Mark 3.150	3.150 mm (0.1240 in.)
		Mark 3.200	3.200 mm (0.1260 in.)
		Mark 3.250	3.250 mm (0.1280 in.)
		Mark 3.300	3.300 mm (0.1299 in.)
Ignition timing	w/ Terminals TE1 and E1 connected of DLC1		8 – 12˚ BTDC @ idle
Idle speed	–		700 ± 50 rpm
Idler pulley tension spring	Free length		42.0 mm (1.654 in.)
	Installed load at 50.5 mm (1.988 in.)		32 – 37 N (3.25 – 3.75 kgf, 7.2 – 8.3 lbf)
Cylinder head	Warpage		
	Cylinder block side	Maximum	0.05 mm (0.0020 in.)
	Manifold side	Maximum	0.08 mm (0.0031 in.)
	Valve seat		
	Refacing angle		30˚, 45˚, 75˚
	Contacting angle		45˚
	Contacting width		1.0 – 1.4 mm (0.039 – 0.055 in.)
Valve guide bushing	Inside diameter		6.010 – 6.030 mm (0.2366 – 0.2374 in.)
	Outside diameter (for repair part)	STD	11.048 – 11.059 mm (0.4331 – 0.4342 in.)
		O/S 0.05	11.050 – 11.077 mm (0.4350 – 0.4361 in.)
Valve	Valve overall length	STD Intake	97.40 – 97.80 mm (3.8346 – 3.8504 in.)
		Exhaust	98.25 – 98.65 mm (3.8681 – 3.8839 in.)
		Minimum Intake	97.1 mm (3.823 in.)
		Exhaust	98.0 mm (3.858 in.)
	Vale face angle		44.5˚
	Stem diameter	Intake	5.970 – 5.985 mm (0.2350 – 0.2356 in.)
		Exhaust	5.965 – 5.980 mm (0.2348 – 0.2354 in.)
	Stem oil clearance	STD Intake	0.025 – 0.060 mm (0.0010 – 0.0024 in.)
		Exhaust	0.030 – 0.065 mm (0.0012 – 0.0026 in.)
		Maximum Intake	0.08 mm (0.0031 in.)
		Exhaust	0.10 mm (0.0039 in.)
	Margin thickness	STD	0.8 – 1.2 mm (0.031 – 0.047 in.)
		Minimum	0.5 mm (0.020 in.)
Valve spring	Deviation	Maximum	2.0 mm (0.079 in.)
	Free length		40.95 – 42.80 mm (1.6122 – 1.6850 in.)
	Installed tension at 34.7 mm (1.366 in.)		164 – 189 N (16.7 – 19.3 kgf, 36.8 – 42.5 lbf)

Valve lifter	Lifter diameter		30.966 – 30.976 mm (1.2191 – 1.2195 in.)
	Lifter bore diameter		31.000 – 31.018 mm (1.2205 – 1.2212 in.)
	Oil clearance	STD	0.024 – 0.052 mm (0.0009 – 0.0020 in.)
		Maximum	0.07 mm (0.0028 in.)
Manifold	Warpage	Maximum	0.30 mm (0.0118 in.)
Camshaft	Thrust clearance	STD Intake	0.045 – 0.100 mm (0.0018 – 0.0039 in.)
		Exhaust	0.030 – 0.085 mm (0.0012 – 0.0033 in.)
		Maximum Intake	0.12 mm (0.0047 in.)
		Exhaust	0.10 mm (0.0039 in.)
	Journal oil clearance	STD	0.025 – 0.062 mm (0.0010 – 0.0024 in.)
		Maximum	0.10 mm (0.0039 in.)
	Journal diameter		26.959 – 26.975 mm (1.0614 – 1.0620 in.)
	Circle runout	Maximum	0.04 mm (0.0016 in.)
	Cam lobe height	STD Intake	42.01 – 42.11 mm (1.6539 – 1.6579 in.)
		Exhaust	40.06 – 40.16 mm (1.5772 – 1.5811 in.)
		Minimum Intake	41.90 mm (1.6496 in.)
		Exhaust	39.95 mm (1.5728 in.)
	Camshaft gear backlash	STD	0.020 – 0.200 mm (0.0008 – 0.0079 in.)
		Maximum	0.30 mm (0.0188 in.)
	Camshaft gear spring end free distance		22.5 – 22.9 mm (0.886 – 0.902 in.)
Cylinder block	Cylinder head surface warpage	Maximum	0.05 mm (0.0020 in.)
	Cylinder bore diameter	STD Mark 1	87.000 – 87.010 mm (3.4252 – 3.4256 in.)
		Mark 2	87.010 – 87.020 mm (3.4256 – 3.4260 in.)
		Mark 3	87.020 – 87.030 mm (3.4260 – 3.4264 in.)
		Maximum STD	87.23 mm (3.4342 in.)
		O/S 0.50	87.73 mm (3.4350 in.)
Piston and piston ring	Piston diameter	STD Mark 1	86.815 – 86.825 mm (3.4179 – 3.4183 in.)
		Mark 2	86.825 – 86.835 mm (3.4183 – 3.4186 in.)
		Mark 3	86.835 – 86.845 mm (3.4201 – 3.4205 in.)
		O/S 0.50	87.350 – 87.380 mm (3.4375 – 3.4387 in.)
	Piston oil clearance	STD	0.175 – 0.195 mm (0.0068 – 0.0076 in.)
		Maximum	0.215 mm (0.0085 in.)
	Piston ring groove clearance	No.1, No.2	0.030 – 0.070 mm (0.0012 – 0.0028 in.)
	Piston ring end gap	STD No.1	0.270 – 0.490 mm (0.0106 – 0.0192 in.)
		No.2	0.450 – 0.670 mm (0.0177 – 0.0263 in.)
		Oil (side rail)	0.100 – 0.470 mm (0.0039 – 0.0185 in.)
		Maximum No.1	1.09 mm (0.0429 in.)
		No.2	1.27 mm (0.0499 in.)
		Oil (side rail)	1.07 mm (0.0421in.)
Connecting rod	Thrust clearance	STD	0.160 – 0.312 mm (0.0063 – 0.0123 inb.)
		Maximum	0.35 mm (0.0138 in.)
	Connecting rod bearing center wall thickness		
	Reference	STD Mark 1	1.484 – 1.488 mm (0.0584 – 0.0586 in.)
		Mark 2	1.488 – 1.492 mm (0.0586 – 0.0587 in.)
		Mark 3	1.492 – 1.496 mm (0.0587 – 0.0589 in.)
	Connecting rod oil clearance	STD STD	0.024 – 0.055 mm (0.0009 – 0.0022 in.)
		U/S 0.25	0.023 – 0.069 mm (0.0009 – 0.0027 in.)
		Maximum	0.08 mm (0.0031 in.)
	Rod bend	Maximum per 100 mm (3.94 in.)	0.05 mm (0.0020 in.)
	Rod twist	Maximum per 100 mm (3.94 in.)	0.15 mm (0.0059 in.)
	Bushing inside diameter		22.005 – 22.017 mm (0.8663 – 0.8668 in.)
	Piston pin diameter		21.997 – 22.009 mm (0.8660 – 0.8665 in.)
	Piston pin oil clearance	STD	0.005 – 0.011 mm (0.0002 – 0.0004 in.)
		Maximum	0.05 mm (0.0020 in.)
	Connecting rod bolt outside diameter	STD	7.860 – 8.000 mm (0.3094 – 0.3150 in.)
		Minimum	7.60 mm (0.2992 in.)

Crankshaft	Thrust clearance	STD	0.020 – 0.220 mm (0.0008 – 0.0087 in.)
		Maximum	0.30 mm (0.0118 in.)
	Thrust washer thickness		2.440 – 2.490 mm (0.0961 – 0.0980 in.)
	Main journal oil clearance	STD No.3 STD	0.025 – 0.044 mm (0.0010 – 0.0017 in.)
		U/S 0.25	0.027 – 0.067 mm (0.0011 – 0.0026 in.)
		Others STD	0.015 – 0.034 mm (0.0006 – 0.0013 in.)
		U/S 0.25	0.019 – 0.059 mm (0.0007 – 0.0023 in.)
		Maximum	0.08 mm (0.0031 in.)
	Main journal diameter	STD	54.988 – 55.003 mm (2.1653 – 2.1655 in.)
		U/S 0.25	54.745 – 54.755 mm (2.1553 – 2.1557 in.)
	Main bearing center wall thickness (Reference)		
		STD No.3 Mark 1	1.992 – 1.995 mm (0.0784 – 0.0785 in.)
		Mark 2	1.995 – 1.998 mm (0.0785 – 0.0787 in.)
		Mark 3	1.998 – 2.001 mm (0.0787 – 0.0788 in.)
		Mark 4	2.001 – 2.004 mm (0.0788 – 0.0789 in.)
		Mark 5	2.004 – 2.007 mm (0.0789 – 0.0790 in.)
		Others Mark 1	1.997 – 2.000 mm (0.0786 – 0.0787 in.)
		Mark 2	2.000 – 2.003 mm (0.0787 – 0.0789 in.)
		Mark 3	2.003 – 2.006 mm (0.0789 – 0.0790 in.)
		Mark 4	2.006 – 2.009 mm (0.0790 – 0.0791 in.)
		Mark 5	2.009 – 2.012 mm (0.0791 – 0.0792 in.)
	Crank pin diameter	STD	51.985 – 52.000 mm (2.0466 – 2.0472 in.)
		U/S 0.25	51.745 – 51.755 mm (2.0372 – 2.0376 in.)
	Circle runout	Maximum	0.06 mm (0.0024 in.)
	Main journal taper and out–of–round	Maximum	0.02 mm (0.0008 in.)
	Crank pin taper and out–of–round	Maximum	0.02 mm (0.0008 in.)
Balance shaft	Thrust clearance	STD	0.060 – 0.110 mm (0.0024 – 0.0043 in.)
		Maximum	0.11 mm (0.0043 in.)
	Backlash		
	Crankshaft to No.1 Balance shaft		
	Off–vehicle	STD at punch mark A	0.005 – 0.040 mm (0.002 – 0.0016 in.)
		at punch mark B	0.005 – 0.060 mm (0.002 – 0.0024 in.)
	On–vehicle	STD at punch mark A	0.025 – 0.065 mm (0.0010 – 0.0026 in.)
		at punch mark B	0.025 – 0.085 mm (0.0010 – 0.0033 in.)
	Adjusting spacer thickness	No.01	1.74 mm (0.0685 in.)
		No.03	1.76 mm (0.0693 in.)
		No.05	1.78 mm (0.0701 in.)
		No.07	1.80 mm (0.0709 in.)
		No.09	1.82 mm (0.0717 in.)
		No.11	1.84 mm (0.0724 in.)
		No.13	1.86 mm (0.0732 in.)
		No.15	1.88 mm (0.0740 in.)
		No.17	1.90 mm (0.0748 in.)
		No.19	1.92 mm (0.0756 in.)
		No.21	1.94 mm (0.0764 in.)
		No.23	1.96 mm (0.0772 in.)
		No.25	1.98 mm (0.0780 in.)
		No.27	2.00 mm (0.0787 in.)
		No.29	2.02 mm (0.0795 in.)
		No.31	2.04 mm (0.0803 in.)
		No.33	2.06 mm (0.0811 in.)
		No.35	2.08 mm (0.0819 in.)
		No.37	2.10 mm (0.0827 in.)
		No.39	2.12 mm (0.0835 in.)

SS0AE–03

TORQUE SPECIFICATION

Part tightened		N·m	kgf·cm	ft·lbf
Oil pump pulley x Oil pump drive shaft		24	245	18
No.2 idler pulley x Oil pump		42	425	31
Crankshaft pulley x Crankshaft		108	1,100	80
Camshaft timing pulley x Camshaft		54	550	40
	for use with SST	37	380	27
No.1 idler pulley x Cylinder head		42	425	31
Cylinder head x Cylinder block	1st	49	500	36
	2nd	Turn 90°	Turn 90°	Turn 90°
Water bypass pipe x Cylinder head		19	195	14
Spark plug tube x Cylinder head		49	500	36
Camshaft bearing cap x Cylinder head		19	190	14
Cylinder head cover x Cylinder head		44	450	33
RH engine hanger x Generator bracket		25	250	18
Generator bracket x Cylinder head		42	425	31
LH engine hanger x Cylinder head		25	250	18
No.3 timing belt cover x Cylinder head		7.8	80	69 in.·lbf
Delivery pipe x Cylinder head		13	130	9
Intake manifold x Cylinder head		19	195	14
Fuel inlet hose x Delivery pipe		34	350	25
	for use with SST	29	300	21
EGR valve x intake manifold		13.3	130	10
EGR pipe x Cylinder head		61.2	600	45
Intake manifold stay x Intake manifold		39	398	29
Intake manifold stay x Stiffening plate		39	398	29
Water outlet x Cylinder head		15	150	11
No.2 intake manifold stay x Cylinder head		21	214	15
No.2 intake manifold stay x Intake manifold		42	428	31
Exhaust manifold x Cylinder head		49	500	36
No.1 exhaust manifold stay x Exhaust manifold		42	425	31
No.1 exhaust manifold stay x Transaxle		42	425	31
No.2 exhaust manifold stay x Exhaust manifold		42	425	31
No.2 exhaust manifold stay, LH stiffener plate x Cylinder block	TMC made	58	591	43
	TMMK made	42	425	31
No.1 rear end plate x Cylinder block		9.3	95	82 in.·lbf
Flywheel (M/T) x Crankshaft		88	900	65
Drive plate (A/T) x Crankshaft		83	850	61
Transaxle (M/T) x Cylinder block	14 mm head	46	470	34
	17 mm head	64	650	47
Transaxle (A/T) x Cylinder block		66	670	48
Drive plate x Torque converter clutch		27	280	20
No.2 rear end plate x Cylinder block		9.3	95	82 in.·lbf
Exhaust pipe bracket, No.2 rear end plate x Transaxle		19	195	14
RH stiffener plate x Cylinder block		39	398	29
RH stiffener plate x Transaxle		39	398	29

LH stiffener plate x Transaxle M/T	37	380	27
A/T	42	430	31
No.2 RH engine mounting bracket x Cylinder block	52	530	38
No.2 RH engine mounting bracket x Generator bracket	52	530	38
Rear engine mounting insulator x Cylinder block	64	650	47
Front engine mounting insulator x Cylinder block	64	650	47
Engine moving control rod x No.2 RH engine mounting bracket	64	650	47
Engine moving control rod x Body	64	650	47
Front engine mounting insulator x Front frame TMC made	80	820	59
TMMK made for silver color	44	450	32
for green color	66	670	49
Rear engine mounting insulator x Front frame	66	670	49
LH engine mounting insulator x Frount frame	80	820	59
LH engine mounting insulator x Transaxle	64	650	47
PS pump x PS pump bracket	43	440	32
A/C compressor x Cylinder block	25.5	260	19
Fuel inlet hose x Fuel filter	29	300	21
Main bearing cap x Cylinder block	59	600	43
Connecting rod cap x Connecting rod 1st	25	250	18
2nd	Turn 90°	Turn 90°	Turn 90°
Engine balancer x Cylinder block	49	500	36
Rear oil seal retainer x Cylinder block	13	130	9
Water pump x Cylinder block	8.8	90	78 in.·lbf
Generator drive belt adjusting bar x Cylinder block	22	224	16
PS pump bracket x Cylinder block	43	440	32
Front exhaust pipe x Exhaust manifold	62	630	46
Front exhaust pipe x Center pipe	56	570	41
Center exhaust pipe x Tailpipe	56	570	41
Support bracket for front exhaust pipe x Exhaust pipe bracket on No.2 rear end plate	33	330	24
Support stay for front exhaust pipe x Support bracket	33	330	24
Support bracket for front exhaust pipe x Front frame	33	330	24
Support bracket for center exhaust pipe x Body	19	195	14
Support bracket for tailpipe x Body	33	330	24

ENGINE MECHANICAL (1MZ–FE)

SS076–02

SERVICE DATA

Compression pressure		at 250 rpm STD	1,500 kPa (15.3 kgf/cm^2, 218 psi)
		Minimum	1,000 kPa (10.2 kgf/cm^2, 145 psi)
	Difference of pressure between each cylinder		100 kPa (1.0 kgf/cm^2, 15 psi) or less
Valve clearance		at cold Intake	0.15 – 0.25 mm (0.006 – 0.010 in.)
		Exhaust	0.25 – 0.35 mm (0.010 – 0.014 in.)
	Adjusting shim for repair part	Mark 2.500	2.500 mm (0.0984 in.)
		Mark 2.550	2.550 mm (0.1004 in.)
		Mark 2.600	2.600 mm (0.1024 in.)
		Mark 2.650	2.650 mm (0.1043 in.)
		Mark 2.700	2.700 mm (0.1063 in.)
		Mark 2.750	2.750 mm (0.1083 in.)
		Mark 2.800	2.800 mm (0.1102 in.)
		Mark 2.850	2.850 mm (0.1122 in.)
		Mark 2.900	2.900 mm (0.1142 in.)
		Mark 2.950	2.950 mm (0.1161 in.)
		Mark 3.000	3.000 mm (0.1181 in.)
		Mark 3.050	3.050 mm (0.1201 in.)
		Mark 3.100	3.100 mm (0.1220 in.)
		Mark 3.150	3.150 mm (0.1240 in.)
		Mark 3.200	3.200 mm (0.1260 in.)
		Mark 3.250	3.250 mm (0.1280 in.)
		Mark 3.300	3.300 mm (0.1299 in.)
Ignition timing	w/ Terminals TE1 and E1 connected of DLC1		8 – 12˚ BTDC @ idle
Idle speed	–		700 ± 50 rpm
Timing belt tensioner	Protrusion from housing side		10.0 – 10.8 mm (0.394 – 0.425 in.)
Cylinder head	Warpage	Maximum	0.10 mm (0.039 in.)
	Valve seat		
	Refacing angle		30˚, 45˚, 75˚
	Contacting angle		45˚
	Contacting width		1.0 – 1.4 mm (0.039 – 0.055 in.)
	Valve guide bushing bore diameter	STD	10.295 – 10.313 mm (0.4053 – 0.4080 in.)
		O/S 0.05	10.345 – 10.363 mm (0.4073 – 0.4080 in.)
	12 pointed head cylinder head bolt diameter		
		at tension portion STD	8.95 – 9.05 mm (0.3524 – 0.3563 in.)
		Minimum	8.75 mm (0.3445 in.)
Valve guide bushing	Inside diameter		5.510 – 5.530 mm (0.2169 – 0.2177 in.)
	Outside diameter for repair part	STD	10.333 – 10.344 mm (0.4068 – 0.4072 in.)
		O/S 0.05	10.383 – 10.394 mm (0.4088 – 0.4092 in.)
Valve	Valve overall length	STD Intake	95.45 mm (3.5779 in.)
		Exhaust	95.40 mm (3.7559 in.)
		Minimum Intake	94.95 mm (3.7382 in.)
		Exhaust	94.90 mm (3.7362 in.)
	Valve face angle		44.5˚
	Stem diameter	Intake	5.470 – 5.485 mm (0.2154 – 0.2159 in.)
		Exhaust	5.465 – 5.480 mm (0.2152 – 0.2157 in.)
	Stem oil clearance	STD Intake	0.025 – 0.060 mm (0.0010 – 0.0024 in.)
		Exhaust	0.030 – 0.065 mm (0.0012 – 0.0026 in.)
		Maximum Intake	0.08 mm (0.0031 in.)
		Exhaust	0.10 mm (0.0039 in.)
	Margin thickness	STD	1.0 mm (0.039 in.)
		Maximum	0.5 mm (0.020 in.)

Valve spring	Deviation	Maximum	2.0 mm (0.079 in.)
	Free length		45.50 mm (1.7913 in.)
	Installed tension at 33.8 mm (1.331 in.)		186 – 206 N (19.0 – 21.0 kgf, 41.9 – 46.3 lbf)
Valve lifter	Lifter diameter		30.966 – 30.976 mm (1.2191 – 2.2195 in.)
	Lifter bore diameter		31.000 – 31.016 mm (1.2205 – 1.2211 in.)
	Oil clearance	STD	0.024 – 0.050 mm (0.0009 – 0.0020 in.)
		Maximum	0.07 mm (0.0028 in.)
Camshaft	Thrust clearance	STD	0.040 – 0.090 mm (0.0016 – 0.0035 in.)
		Maximum	0.12 mm (0.0047 in.)
	Journal oil clearance	STD Intake	0.035 – 0.072 mm (0.0014 – 0.0028 in.)
		Exhaust	0.025 – 0.062 mm (0.0010 – 0.0024 in.)
		Maximum Intake	0.10 mm (0.0039 in.)
		Exhaust	0.09 mm (0.0035 in.)
	Journal diameter		26.959 – 26.975 mm (1.0613 – 1.0620 in.)
	Circle runout	Maximum	0.06 mm (0.0024 in.)
	Cam lobe height	STD Intake	42.11 – 42.21 mm (1.6579 – 1.6618 in.)
		Exhaust	41.96 – 42.06 mm (1.6520 – 1.6559 in.)
		Minimum Intake	41.96 mm (1.6520 in.)
		Exhaust	41.81 mm (1.6461 in.)
	Camshaft gear backlash	STD	0.020 – 0.200 mm (0.0008 – 0.0079 in.)
		Maximum	0.30 mm (0.0188 in.)
	Camshaft gear spring end free distance		18.2 – 18.8 mm (0.712 – 0.740 in.)
Air intake chamber	Warpage	Maximum	0.10 mm (0.0039 in.)
Intake manifold	Warpage		
	Air intake chamber side	Maximum	0.15 mm (0.0059 in.)
	Cylinder head side	Maximum	0.08 mm (0.0031 in.)
Exhaust manifold	Warpage	Maximum	0.50 mm (0.0196 in.)
Cylinder block	Cylinder head surface warpage	Maximum	0.07 mm (0.0028 in.)
	Cylinder bore diameter		87.500 – 87.512 mm (3.4449 – 3.4453 in.)
		Maximum	87.52 mm (3.4457 in.)
	12 pointed head main bearing cap bolt diameter		
	at tension portion	STD	7.500 – 7.600 mm (0.2953 – 0.2992 in.)
		Minimum	7.20 mm (0.2835 in.)
Piston and piston ring	Piston diameter		
	AISIN made		
	at 23.2 mm (0.913 in.) from the piston head		87.406 – 87.416 mm (3.4412 – 3.4416 in.)
	MAHLE made		
	at 41.2 mm (1.622 in.) from the piston head		87.453 – 87.467 mm (3.4430 – 3.4436 in.)
	Piston oil clearance		
	AISIN made	STD	0.084 – 0.106 mm (0.0033 – 0.0042)
		Maximum	0.13 mm (0.0051 in.)
	MAHLE made	STD	0.033 – 0.059 mm (0.0013 – 0.0023)
		Maximum	0.08 mm (0.0031 in.)
	Piston ring groove clearance	No.1	0.020 – 0.070 mm (0.0008 – 0.0028 in.)
		No.2	0.020 – 0.060 mm (0.0008 – 0.0024 in.)
	Piston ring end gap	STD No.1	0.25 – 0.35 mm (0.0098 – 0.0138 in.)
		No.2	0.35 – 0.45 mm (0.0138 – 0.0177 in.)
		Oil	0.15 – 0.40 mm (0.0059 – 0.0157 in.)
		Maximum No.1	0.95 mm (0.0374 in.)
		No.2	1.05 mm (0.0413 in.)
		Oil	1.00 mm (0.0394 in.)

Connecting rod	Thrust clearance	STD	0.15 – 0.30 mm (0.0059 – 0.0118 in.)
		Maximum	0.35 mm (0.0138 in.)
	Connecting rod thickness		20.80 – 20.85 mm (0.8189 – 0.8209 in.)
	Connecting rod bearing center wall thickness		
	Reference	Mark 1	1.484 – 1.487 mm (0.0584 – 0.0585 in.)
		Mark 2	1.487 – 1.490 mm (0.0585 – 0.0587 in.)
		Mark 3	1.490 – 1.493 mm (0.0587 – 0.0588 in.)
		Mark 4	1.493 – 1.496 mm (0.0588 – 0.0589 in.)
	Connecting rod oil clearance	STD	0.038 – 0.064 mm (0.0015 – 0.0025 in.)
		Maximum	0.08 mm (0.0031 in.)
	Rod out–of–alignment	Maximum per 100 mm (3.94 in.)	0.05 mm (0.0020 in.)
	Rod twist	Maximum per 100 mm (3.94 in.)	0.15 mm (0.0059 in.)
	Bushing inside diameter		22.005 – 22.014 mm (0.8663 – 0.8667 in.)
	Piston pin diameter		21.997 – 22.006 mm (0.8660 – 0.8664 in.)
	Bushing oil clearance	STD	0.005 – 0.011 mm (0.0002 – 0.0004 in)
		Maximum	0.05 mm (0.0020 in.)
	Connecting rod bolt diameter		
		at tension portion STD	7.2 – 7.3 mm (0.284 – 0.287 in.)
		Minimum	7.0 mm (0.276 in.)
Crankshaft	Thrust clearance	STD	0.04 – 0.24 mm (0.0016 – 0.0095 in.)
		Maximum	0.30 mm (0.0118 in.)
	Thrust washer thickness		1.930 – 1.980 mm (0.0760 – 0.0780 in.)
	Main journal oil clearance	STD No.1 and No.4	0.014 – 0.036 mm (0.0006 – 0.0014 in.)
		No.2 and No.3	0.026 – 0.048 mm (0.0010 – 0.0019 in.)
		Maximum No.1 and No.4	0.05 mm (0.0020 in.)
		No.2 and No.3	0.06 mm (0.0024 in.)
	Main journal diameter		60.988 – 61.000 mm (2.4011 – 2.4016 in.)
	Main bearing center wall thickness		
	Reference (TMC made)	Mark 1	2.486 – 2.489 mm (0.0979 – 0.0980 in.)
		Mark 2	2.489 – 2.492 mm (0.0980 – 0.0981 in.)
		Mark 3	2.492 – 2.495 mm (0.0981 – 0.0982 in.)
		Mark 4	2.495 – 2.498 mm (0.0982 – 0.0983 in.)
		Mark 5	2.498 – 2.501 mm (0.0983 – 0.0985 in.)
		Mark 6	2.501 – 2.504 mm (0.0985 – 0.0986 in.)
		Mark 7	2.504 – 2.507 mm (0.0986 – 0.0987 in.)
	Reference (TMMK made)	Mark 1	2.485 – 2.488 mm (0.0978 – 0.0980 in.)
		Mark 2	2.488 – 2.491 mm (0.0980 – 0.0981 in.)
		Mark 3	2.491 – 2.494 mm (0.0981 – 0.0982 in.)
		Mark 4	2.494 – 2.497 mm (0.0982 – 0.0983 in.)
		Mark 5	2.497 – 2.500 mm (0.0983 – 0.0984 in.)
		Mark 6	2.500 – 2.503 mm (0.0984 – 0.0985 in.)
		Mark 7	2.503 – 2.506 mm (0.0985 – 0.0987 in.)
	Crank pin diameter		52.992 – 53.000 mm (2.0863 – 2.0866 in.)
	Circle runout	Maximum	0.06 mm (0.0024 in.)
	Main journal taper and out–of–round	Maximum	0.02 mm (0.0008 in.)
	Crank pin taper and out–of–round	Maximum	0.02 mm (0.0008 in.)

SS077–03

TORQUE SPECIFICATION

Part tightened	N·m	kgf·cm	ft·lbf
Timing belt plate x Oil pump	8	80	69 in.·lbf
No.1 idler pulley x Oil pump	34	350	25
No.2 idler pulley x No.2 idler pulley bracket	43	440	32
Camshaft timing pulley x Camshaft	125	1,300	94
for SST	88	900	65
Timing belt tensioner x Oil pump	27	280	20
RH engine mounting bracket x Cylinder block	28	290	21
No.2 timing belt cover x No.3 timing belt cover	8.5	85	74 in.·lbf
No.1 timing belt cover x Oil pump	8.5	85	74 in.·lbf
Crankshaft pulley x Crankshaft	215	2,200	159
No.2 generator bracket x Engine RH mounting bracket	28	290	21
Cylinder head x Cylinder block 12 pointed head bolt 1st	54	550	40
2nd	Turn 90°	Turn 90°	Turn 90°
Recessed head bolt	18.5	185	13
Camshaft bearing cap x Cylinder head	16	160	12
Cylinder head cover x Cylinder head	8	80	69 in.·lbf
Exhaust manifold x Cylinder head	49	500	36
Exhaust manifold stay x Exhaust manifold			
Except California A/T and all M/T	20	200	15
California A/T and all M/T	34	350	25
Exhaust manifold stay x Transmission housing			
Except California A/T	20	200	15
California A/T	34	350	25
No.1 EGR pipe x RH exhaust manifold	12	120	9
No.1 EGR pipe x EGR cooler	12	120	9
PS pump bracket x RH cylinder head	43	440	32
Oil dipstick guide x LH cylinder head	8	80	69 in.·lbf
Water inlet pipe x LH cylinder head	19.5	200	14
Cylinder head rear plate x LH cylinder head	8	80	69 in.·lbf
No.3 timing belt cover x Cylinder head	8.5	85	74 in.·lbf
Water outlet x Intake manifold	15	150	11
Fuel inlet hose x Fuel filter	29	300	21
Intake manifold x Cylinder head	15	150	11
Air intake chamber x Intake manifold	43	440	32
No.2 EGR pipe x Air intake chamber	12	120	9
No.2 EGR pipe x EGR cooler	12	120	9
No.1 engine hanger x Air intake chamber	39	400	29
No.1 engine hanger x RH cylinder head	39	400	29
Air intake chamber stay x Air intake chamber	19.5	200	14
Air intake chamber stay x RH cylinder head	19.5	200	14
Rear engine mounting insulator x Cylinder block	64	650	47
Front engine mounting insulator x Cylinder block	64	650	47
Engine moving control rod x RH engine mounting bracket	64	650	47
Engine moving control rod x RH fender apron	64	650	47
No.2 RH engine mounting stay x No.2 RH engine mounting bracket	64	650	47

No.2 RH engine mounting stay x No.2 Generator bracket	64	650	47
RH engine mounting stay x Water outlet	32	320	23
RH engine mounting stay x Engine moving control rod	32	320	23
RH engine mounting stay x No.2 RH engine mounting bracket	32	320	23
Front engine mounting insulator x Front frame			
TMC made	80	820	59
TMMK made Silver color bolt	44	450	32
Green color bolt	66	670	48
Engine mounting absorber x Front frame	48	490	35
Engine mounting absorber x Transaxle	48	490	35
Rear engine mounting insulator x Front frame	66	670	48
LH engine mounting insulator x Transaxle	64	650	47
PS pump x PS pump bracket	43	440	31
A/C compressor x Housing bracket	25	250	18
A/C compressor x No.1 oil pan	25	250	18
Generator adjusting bar x Drive belt adjusting bar bracket	18	185	13
Main bearing cap x Cylinder block 12 pointed head bolt 1st	22	225	16
2nd	Turn 90°	Turn 90°	Turn 90°
6 pointed head bolt	27	275	20
Connecting rod cap x Connecting rod 1st	24.5	250	18
2nd	Turn 90°	Turn 90°	Turn 90°
Rear oil seal retainer x Cylinder block	8	80	69 in.·lbf
EGR cooler x Cylinder block	9	90	78 in.·lbf
Engine coolant drain union x Cylinder block	39	400	29
Water seal plate x Cylinder block	18	180	13
Oil filter union x Cylinder block	30	310	22
Water inlet housing x Cylinder block	8	80	69 in.·lbf
Knock sensor x Cylinder block	39	400	29
No.2 idler pulley bracket x Cylinder block	28	290	21
A/C compressor housing bracket x Cylinder block	25	250	18
Generator bracket x Cylinder block	43	440	32
Drive plate x Crankshaft	83	850	61
Flywheel x Crankshaft	83	850	61
Front exhaust pipe support bracket x No.1 oil pan	21	210	15
Front exhaust pipe x Exhaust manifold	62	630	46
Front exhaust pipe x Center exhaust pipe	56	570	41
Center exhaust pipe x Tailpipe	56	570	41
Front exhaust pipe bracket x Sub frame	33	330	24
Front exhaust pipe support bracket x Front exhaust pipe stay	33	330	24
Heated oxygen sensor x Center exhaust pipe	44	450	33

EMISSION CONTROL (5S–FE)

SS0AF–03

TORQUE SPECIFICATION

Part tightened	N·m	kgf·cm	ft·lbf
EGR valve x Intake manifold	13.3	136	10
EGR valve x EGR pipe	10	102	7
Exhaust manifold x Cylinder head	49	500	36
Front exhaust pipe x Exhaust manifold	62	630	46
Front exhaust pipe x Center exhaust pipe	56	570	41

EMISSION CONTROL (1MZ–FE)

SS078–01

SERVICE DATA

EGR valve position sensor	Resistance (VC – E2)	1.5 – 4.3 kΩ
	Power source voltage (VC– E2)	4.5 – 5.5 V
	Power output voltage (EGLS – E2)	
	at vacuum (17.3 kPa, 130 mmHg, 5.1 in.Hg)	3.2 – 5.1 V
	at no vacuum	0.4 – 1.6 V

SS079–02

TORQUE SPECIFICATION

Part tightened	N·m	kgf·cm	ft·lbf
EGR valve position sensor x EGR valve	2	20	17 in.·lbf
EGR pipe x EGR valve	12	120	9
EGR pipe x EGR cooler	12	120	9
EGR valve x Air intake chamber	12	120	9
EGR gas temperature sensor x EGR valve	20	200	14
Front exhaust pipe x Exhaust manifold	62	630	46
Front exhaust pipe x Center exhaust pipe	56	570	41
Front exhaust pipe bracket x Sub frame	33	330	24
Front exhaust pipe support bracket x Front exhaust pipe stay	33	330	24

SFI (5S–FE)

SS0AG–03

SERVICE DATA

Fuel pressure regulator	Fuel pressure	at no vacuum	301 – 347 kPa (3.1 – 3.5 kgf/cm^2, 44 – 50 psi)
Fuel pump	Resistance	at 20°C (68°F)	0.2 – 3.0 Ω
Injector	Resistance	at 20°C (68°F)	13.4 – 14.2 Ω
		Injection volume	54 – 69 cm^3 (3.3 – 4.2 cu in.) per 15 seconds
		Difference between each cylinder	7 cm^3 (0.4 cu in.) or less
		Fuel leakage	One drop or less per minute
Throttle body		Throttle body fully closed angle	6°
		Throttle opener setting speed	1,300 – 1,500 rpm (w/ Cooling fan OFF)
Throttle position sensor	Clearance between stop screw and lever		
	0 mm (0 in.)	VTA – E2	0.2 – 5.7 kΩ
	Throttle valve fully open	VTA – E2	2.0 – 10.2 kΩ
	–	VC – E2	2.5 – 5.9 kΩ
IAC valve	Resistance (+B – ISCC or ISCO)	at cold	17.0 – 24.5 Ω
		at hot	21.5 – 28.5 Ω
VSV for EVAP	Resistance	at 20°C (68°F)	30 – 34 Ω
VSV for vapor pressure sensor	Resistance	at 20°C (68°F)	33 – 39 Ω
VSV for EGR	Resistance	at 20°C (68°F)	33 – 39 Ω
ECT sensor	Resistance	at –20°C (–4°F)	10 – 20 kΩ
		at 0°C (32°F)	4 – 7 kΩ
		at 20°C (68°F)	2 – 3 kΩ
		at 40°C (104°F)	0.9 – 1.3 kΩ
		at 60°C (140°F)	0.4 – 0.7 kΩ
		at 80°C (176°F)	0.2 – 0.4 kΩ
IAT sensor	Resistance	at –20°C (–4°F)	10 – 20 kΩ
		at 0°C (32°F)	4 – 7 kΩ
		at 20°C (68°F)	2 – 3 kΩ
		at 40°C (104°F)	0.9 – 1.3 kΩ
		at 60°C (140°F)	0.4 – 0.7 kΩ
		at 80°C (176°F)	0.2 – 0.4 kΩ
MAP sensor	Power source voltage		4.5 – 5.5 V
Vapor Pressure Sensor	Power sorce voltage		4.5 – 5.5 V
A/F sensor	Resistance	at 20°C (68°F)	0.8 – 1.4 Ω
Heated oxygen sensor	Resistance	at 20°C (68°F)	11 – 16 Ω
Fuel cut rpm	Fuel return rpm		1,500 rpm

SS0AH–03

TORQUE SPECIFICATION

Part tightened	N·m	kgf·cm	ft·lbf
Fuel line			
Union bolt type	29	300	21
Flare nut type for use with SST	28	285	21
Fuel pump assembly x Fuel tank	4	40	35 in.·lbf
Fuel filter x Fuel pump bracket	2	20	17 in.·lbf
Fuel pressure regulator x Fuel pump bracket	2	20	17 in.·lbf
Delivery pipe x Cylinder head	13	130	9
Fuel tank band x Body	39	400	29
Throttle body x Intake manifold	19	195	14
Knock sensor 1 x Cylinder block	44	450	32
A/F sensor x Exhaust manifold	44	450	32
Oxygen sensor (bank 1 sensor 1) x Exhaust manifold	44	450	32
Oxygen sensor (bank 1 sensor 2) x Front exhaust pipe	44	450	32

SFI (1MZ–FE)

SS109–02

SERVICE DATA

Fuel pressure regulator	Fuel pressure	at no vacuum	301 – 347 kPa (3.1 – 3.5 kgf/cm^2, 44 – 50 psi)
Fuel pump	Resistance	at 20˚C (68˚F)	0.2 – 3.0 Ω
Injector	Resistance Injection volume Difference between each cylinder Fuel leakage		13.4 – 14.2 Ω 60 – 73 cm^3 (3.4 – 4.5 cu in.) per 15 sec. 13 cm^3 (0.8 cu in.) or less 1 drop or less per 12 minute
MAF meter	Resistance (THA – E2)	at –20˚C (–4˚F) at 20˚C (68˚F) at 60˚C (140˚F)	14.6 – 17.8 kΩ 2.21 – 2.69 kΩ 0.29 – 0.35 kΩ
Throttle body	Throttle opener setting speed		900 – 1,950 rpm
Throttle position sensor	Resistance Throttle valve fully closed Throttle valve fully open –	 VTA – E2 VTA – E2 VC – E2	 0.2 – 6.3 kΩ 2.0 – 10.2 kΩ 2.5 – 5.9 kΩ
IAC valve	Resistance (+B – RSO or RSC)	at cold at hot	17.0 – 25.0 Ω 21.5 – 29.5 Ω
VSV for EGR	Resistance	at 20˚C (68˚F)	27 – 33 Ω
VSV for EVAP	Resistance	at 20˚C (68˚F)	27 – 33 Ω
VSV for ACIS	Resistance	at 20˚C (68˚F)	33 – 39 Ω
VSV for Vapor Pressure Sensor	Resistance	at 20˚C (68˚F)	33 – 39 Ω
Vapor Pressure Sensor	Power source voltage		4.5 – 5.5 V
ECT sensor	Resistance	at –20˚C (–4˚F) at 0˚C (32˚F) at 20˚C (68˚F) at 40˚C (104˚F) at 60˚C (140˚F) at 80˚C (176˚F)	10 – 20 kΩ 4 – 7 kΩ 2 – 3 kΩ 0.9 – 1.3 kΩ 0.4 – 0.7 kΩ 0.2 – 0.4 kΩ
EGR gas temperature sensor	Resistance	at 50˚C (122˚F) at 100˚C (212˚F) at 150˚C (302˚F)	64 – 97 kΩ 11 – 16 kΩ 2 – 4 kΩ
A/F sensor	Heater coil resistance	at 20˚C (68˚F) at 800˚C (1472˚F)	0.8 – 1.4 Ω 1.8 – 3.2 Ω
Heated oxygen sensor	Heater coil resistance	at 20˚C (68˚F) at 800˚C (1472˚F)	11 – 16 Ω 23 – 32 Ω
Fuel cut rpm	Fuel return rpm		1,200 rpm

SS10A–01

TORQUE SPECIFICATION

Part tightened	N·m	kgf·cm	ft·lbf
Fuel line (Union bolt type)	29	300	21
Fuel line (Flare nut type) using SST	28	285	21
Fuel pump assembly x Fuel tank	4	40	35 in.·lbf
Fuel filter x Fuel pump bracket	2	20	17 in.·lbf
Fuel pressure regulator x Fuel pump bracket	2	20	17 in.·lbf
Delivery pipe x Intake manifold	10	100	7
No.1 fuel pipe x Intake manifold	19.5	200	14
Fuel tank band x Body	39	400	29
Throttle body x Air intake chamber	19.5	200	14
Intake air control valve x Air intake chamber	14.5	145	10
ECT sensor x Water outlet	20	200	14
Knock sensor x Cylinder block	39	400	29
A/F sensor x Exhaust manifold	44	450	32
Heated oxygen sensor (Bank 1, 2 sensor 1) x Exhaust manifold	44	450	32
Heated oxygen sensor (Bank 1 sensor 2) x Exhaust pipe	44	450	32

COOLING (5S–FE)

SS0AI–03

SERVICE DATA

Thermostat	Valve opening temperature Valve lift at 95˚C (203˚F)	80 – 84˚C (176 – 183˚F) 8 mm (0.31 in.) or more
Radiator cap	Relief valve opening pressure STD Minimum	74 – 103 kPa (0.75 – 1.05 kgf/cm^2, 10.7 – 14.9 psi) 59 kPa (0.6 kgf/cm^2, 8.5 psi)
Electric cooling fan	Rotating amperage	4.9 – 8.5 A

SS0AJ–03

TORQUE SPECIFICATION

Part tightened	N·m	kgf·cm	ft·lbf
Cylinder block x Drain plug	25	250	18
Water pump x Water pump cover, Cylinder block	8.8	90	78 in.·lbf
Water bypass pipe x Water pump cover	9.3	95	82 in.·lbf
Generator drive belt adjusting bar x Cylinder block	22	224	16
Water inlet x Water pump cover	8.8	90	78 in.·lbf
Oil cooler x Radiator lower tank	8.3	85	74 in.·lbf
Oil cooler pipe x Oil cooler	14.7	150	11
Upper radiator support x Body	12.8	130	9
Electric cooling fan x Radiator	5.0	50	44 in.·lbf

COOLING (1MZ–FE)

SS07C–01

SERVICE DATA

Thermostat	Valve opening pressure		80 – 84˚C (176 – 183˚F)
	Valve lift	at 95˚C (203˚F)	10.0 mm (0.394 in.) or more
Radiator cap	Relief valve opening pressure	STD	83 – 113 kPa (0.85 – 1.15 kgf/cm^2, 12.1 – 16.4 psi)
		Minimum	69 kPa (0.7 kgf/cm^2, 10.0 psi)
Radiator	Plate height		7.4 – 7.8 mm (0.2959 – 0.3119 in.)
Cooling fan	Rotating amperage	at 20˚C (68˚F) No.1	8.3 – 11.3 A
		No.2	8.3 – 11.3 A

SS07D–02

TORQUE SPECIFICATION

Part tightened	N·m	kgf·cm	ft·lbf
RH engine drain plug x EGR cooler	7	70	61 in.·lbf
LH engine drain plug x Union on cylinder block	13	130	9
Water pump x Cylinder block	8	80	69 in.·lbf
Water inlet x Water inlet housing	8	80	69 in.·lbf
Water inlet pipe x LH cylinder head	19.5	200	14
Radiator support x Body	12.8	130	9
No.1 cooling fan shroud x Radiator	5.0	50	44 in.·lbf
No.2 cooling fan shroud x Radiator	5.0	50	44 in.·lbf
Radiator oil cooler x Radiator lower tank	8.3	85	74 in.·lbf
Radiator inlet pipe x Radiator lower tank	14.7	150	11

LUBRICATION (5S–FE)

SS0AK–03

SERVICE DATA

Oil pressure		at idle speed	29 kPa (0.3 kgf/cm^2, 4.3 psi) or more
		at 3,000 rpm	245 – 490 kPa (2.5 – 5.0 kgf/cm^2, 36 – 71 psi)
Oil pump	Body clearance	STD	0.10 – 0.16 mm (0.0039 – 0.0063 in.)
		Maximum	0.20 mm (0.0079 in.)
	Tip clearance	STD	0.04 – 0.16 mm (0.0016 – 0.0063 in.)
		Maximum	0.20 mm (0.0079 in.)

SS0AL–03

TORQUE SPECIFICATION

Part tightened		N·m	kgf·cm	ft·lbf
Oil pan x Drain plug		37	375	27
Oil pump body cover x Oil pump body		8.8	90	78 in.·lbf
Oil pump x Cylinder block		8.8	90	78 in.·lbf
Oil strainer x Engine balancer		5.4	55	48 in.·lbf
Oil strainer x Oil pump		5.4	55	48 in.·lbf
Oil pan x Cylinder block		5.4	55	48 in.·lbf
Oil pan x Oil pump		5.4	55	48 in.·lbf
Oil cooler x Cylinder block	Union bolt	78.5	800	58
	Nut	9.0	92	80 in.·lbf

LUBRICATION (1MZ–FE)

SS07E–01

SERVICE DATA

Oil pressure		at idle speed	29 kPa (0.3 kgf/cm^2, 43 psi) or more
		at 3,000 rpm	294 – 539 kPa (3.0 – 5.5 kgf/cm^2, 43 – 78 psi)
Oil pump	Side clearance	STD	0.030 – 0.090 mm (0.0012 – 0.0035 in.)
		Maximum	0.15 mm (0.0059 in.)
	Body clearance	STD	0.100 – 0.175 mm (0.0039 – 0.0069 in.)
		Maximum	0.30 mm (0.0118 in.)
	Tip clearance	STD	0.110 – 0.240 mm (0.0043 – 0.0094 in.)
		Maximum	0.35 mm (0.0138 in.)

SS07F–03

TORQUE SPECIFICATION

Part tightened		N·m	kgf·cm	ft·lbf
Oil pressure switch x Cylinder block		13	130	9
No.2 oil pan x Drain plug		45	460	33
Oil pump x Relief valve plug		36.8	375	37
Oil pump x Cylinder block	10 mm head 12 mm head	8 19.5	80 200	69 in.·lbf 14
Crankshaft position sensor x Oil pump		8	80	69 in.·lbf
Oil pan baffle plate x No.1 oil pan		8	80	69 in.·lbf
No.1 oil pan x Cylinder block		19.5	200	14
No.1 oil pan x Oil pump	10 mm head 12 mm head	8 19.5	80 200	69 in.·lbf 14
No.1 oil pan x Rear oil seal retainer		8	80	69 in.·lbf
No.1 oil pan x Transaxle		37.2	380	27
Oil strainer x Main bearing cap		8	80	69 in.·lbf
Oil strainer x Oil pump		8	80	69 in.·lbf
No.2 oil pan x No.1 oil pan		8	80	69 in.·lbf
Flywheel housing under cover x Transaxle		7.8	80	69 in.·lbf
A/C compressor x A/C compressor housing bracket		25	250	18
PS pump x PS pump bracket		43	440	32
PS pump drive belt adjusting strut x PS pump		43	440	32
PS pump drive belt adjusting strut x Oil pump		43	440	32
Exhaust pipe bracket x No.1 oil pan		21	210	15

IGNITION (5S–FE)

SS0AM–03

SERVICE DATA

Firing order	–		1 – 3 – 4 – 2
High–tension cord	Resistance	Maximum	25 kΩ per cord
Spark plug	Recommended spark plug	DENSO made NGK made	PK20TR11 BKR6EKPB11
	Correct electrode gap for new spark plug		1.1 mm (0.043 in.)
	Maximum electrode gap for used spark plug		1.3 mm (0.051 in.)
Ignition coil	Secondary coil resistance	at cold at hot	9.7 – 16.7 kΩ 12.4 – 19.6 kΩ
Camshaft position sensor	Resistance	at cold at hot	835 – 1,400 Ω 1,060 – 1,645 Ω
Crankshaft position sensor	Resistance	at cold at hot	985 – 1,600 Ω 1,265 – 1,890 Ω

SS0AN–03

TORQUE SPECIFICATION

Part tightened	N·m	kgf·cm	ft·lbf
Spark plug x Cylinder head	18	180	13
Ignition coil x No.2 intake manifold stay	9.8	100	87 in.·lbf
No.2 intake manifold stay x Cylinder head	21	214	15
No.2 intake manifold stay x Intake manifold	42	428	31
Camshaft position sensor assembly x Cylinder head	9.5	97	84 in.·lbf
Crankshaft position sensor x Oil pump	9.5	97	84 in.·lbf

IGNITION (1MZ–FE)

SS07G–02

SERVICE DATA

Firing order	–		1 – 2 – 3 – 4 – 5 – 6
High–tension cord	Resistance	Maximum	25 kΩ per cord
Spark plug	Recommended spark plug	DENSO made	PK20TR11
		NGK made	BKR6EKPB11
	Correct electrode gap for new plug		1.1 mm (0.043 in.)
	Maximum electrode gap for used plug		1.3 mm (0.051 in.)
Ignition coil	Primary coil resistance	at cold	0.70 – 0.94 Ω
		at hot	0.85 – 1.10 Ω
	Secondary coil resistance		
	AISAN made	at cold	10.8 – 14.9 kΩ
		at hot	13.1 – 17.5 kΩ
	Diamond made	at cold	6.8 – 11.7 kΩ
		at hot	8.6 – 13.7 kΩ
Camshaft position sensor	Resistance		
	DENSO made	at cold	835 – 1,400 Ω
		at hot	1,060 – 1,645 Ω
	Wabash made	at cold	1,690 – 2,560 Ω
		at hot	2,145 – 3,010 Ω
Crankshaft position sensor	Resistance	at cold	1,630 – 2,740 Ω
		at hot	2,065 – 3,225 Ω

SS07H–01

TORQUE SPECIFICATION

Part tightened	N·m	kgf·cm	ft·lbf
Spark plug x Cylinder head	18	180	13
Ignition coil x Cylinder head	8	80	69 in.·lbf
Camshaft position sensor x Cylinder head	8	80	69 in.·lbf
Crankshaft position sensor x Oil pump	8	80	69 in.·lbf

STARTING(5S–FE)

SS0AO–01

SERVICE DATA

Starter	Rated voltage and output power		12 V 1.2 kW, 1.4 kW
	No–load characteristics	Current	90 A or less at 11.5 V
		rpm	3,000 rpm or more
	Brush length	STD	15.5 mm (0.610 in.)
		Minimum	10.0 mm (0.394 in.)
	Spring installed load	STD 1.2 kW	13.7 – 19.6 N (1.4 – 2.0 kgf, 3.0 – 4.4 lbf)
		1.4 kW	17.6 – 23.5 N (1.8 – 2.4 kgf, 3.9 – 5.3 lbf)
		Minimum 1.2 kW	9.8 N (1.0 kgf, 2.2 lbf)
		1.4 kW	11.8 N (1.2 kgf, 2.6 lbf)
	Commutator		
	Diameter	STD	30.0 mm (1.181 in.)
		Minimum	29.0 mm (1.142 in.)
	Undercut depth	STD	0.6 mm (0.024 in.)
		Minimum	0.2 mm (0.008 in.)
	Circle runout	Maximum	0.05 mm (0.0020 in.)
	Magnetic switch		
	Contact plate for wear	Maximum	0.9 mm (0.035 in.)

SS0AP–01

TORQUE SPECIFICATION

Part tightened	N·m	kgf·cm	ft·lbf
Starter mounting bolt	37	380	27
End cover x Field frame	1.5	15	13 in.·lbf
Starter housing x Magnetic switch	5.9	60	52 in.·lbf
Field frame x Armature assembly	5.9	60	52 in.·lbf
Lead wire x Terminal C of starter	5.9	60	52 in.·lbf
Terminal nut x Terminal C of starter	17	173	13
Terminal nut x Terminal 30 of starter	17	173	13
Magnetic switch end cover x Magnetic switch housing	2.5	26	23 in.·lbf

STARTING (1MZ–FE)

SS07I–01

SERVICE DATA

Starter	Rated voltage and output power		12 V 1.4 kW
	No–load characteristics	Current	90 A or less at 11.5 V
		rpm	3,000 rpm or more
	Brush length	STD	15.5 mm (0.610 in.)
		Minimum	10.0 mm (0.394 in.)
	Spring installed load	STD	17.6 – 23.5 N (1.8 – 2.4 kgf, 3.9 – 5.3 lbf)
		Minimum	11.8 N (1.2 kgf, 2.6 lbf)
	Commutator		
	Diameter	STD	30.0 mm (1.181 in.)
		Minimum	29.0 mm (1.142 in.)
	Undercut depth	STD	0.6 mm (0.024 in.)
		Minimum	0.2 mm (0.008 in.)
	Circle runout	Maximum	0.05 mm (0.0020 in.)
	Magnetic switch		
	Contact plate for wear	Maximum	0.9 mm (0.035 in.)

SS07J–01

TORQUE SPECIFICATION

Part tightened	N·m	kgf·cm	ft·lbf
Starter mounting bolt	37	380	27
End cover x Field frame	1.5	15	13 in.·lbf
Starter housing x Magnetic switch	5.9	60	52 in.·lbf
Field frame x Armature assembly	5.9	60	52 in.·lbf
Lead wire x Terminal C of starter	5.9	60	52 in.·lbf
Terminal nut x Terminal C of starter	17	170	12
Terminal nut x Terminal 30 of starter	17	170	12
Magnetic switch end cover x Magnetic switch housing	2.5	26	23 in.·lbf

CHARGING(5S–FE)

SS0AQ–01

SERVICE DATA

Battery	Specific gravity (Except maintenance–free battery)		
		at 20˚C (68˚F)	1.25 – 1.29
	Voltage (Maintenance–free battery)	at 20˚C (68˚F)	12.5 – 12.9 V
Drive belt	Tension	w/ A/C New belt	165 ± 25 lbf
		Used belt	110 ± 10 lbf
		w/o A/C New belt	125 ± 25 lbf
		Used belt	95 ± 20 lbf
Generator	Rated output		12 V 80 A
	Rotor coil resistance	at 20˚C (68˚F)	2.7 – 3.1 Ω
	Slip ring diameter	STD	14.2 – 14.4 mm (0.559 – 0.567 in.)
		Minimum	12.8 mm (0.504 in.)
	Brush exposed length	STD	10.5 mm (0.413 in.)
		Minimum	1.5 mm (0.059 in.)
Voltage regulator	Regulating voltage		13.5 – 15.1 V

SS0AR–01

TORQUE SPECIFICATION

Part tightened		N·m	kgf·cm	ft·lbf
Bearing retainer x Drive end frame		3.0	31	27 in.·lbf
Rectifier end frame x Drive end frame		4.5	46	40 in.·lbf
Wire clip x Rectifier end frame		5.4	55	48 in.·lbf
Generator pulley x Rotor		110.5	1,125	81
Rectifier holder x Coil lead on rectifier end frame		2.9	30	26 in.·lbf
Voltage regulator x Rectifier end flame		2.0	20	18 in.·lbf
Voltage regulator x Rectifier holder		2.0	20	18 in.·lbf
Brush holder x Rectifier holder		2.0	20	18 in.·lbf
Brush holder x Voltage regulator		2.0	20	18 in.·lbf
Rear end cover x Rectifier holder		4.4	45	39 in.·lbf
Plate terminal x Rectifier holder	Nut	4.4	45	39 in.·lbf
	Bolt	3.9	39	35 in.·lbf
Terminal insulator x Rectifier holder		4.1	42	36 in.·lbf
Generator x Generator bracket		52	530	38
Generator x Adjusting bar		18	185	13

CHARGING (1MZ–FE)

SS07K–01

SERVICE DATA

Battery	Voltage	at 20˚C (68˚F)	12.5 – 12.9 V
Drive belt	Tension		
	New belt		175 ± 5 lbf
	Used belt		115 ± 20 lbf
Generator	Rated output		12 V 80 A
	Rotor coil resistance	at 20˚C (68˚F)	2.1 – 2.5 Ω
	Slip ring diameter	STD	14.2 – 14.4 mm (0.559 – 0.567 in.)
		Limit	12.8 mm (0.504 in.)
	Brush exposed length	STD	10.5 mm (0.413 in.)
		Limit	1.5 mm (0.059 in.)
Voltage regulator	Regulating voltage		13.5 – 15.1 V

SS07L–01

TORQUE SPECIFICATION

Part tightened		N·m	kgf·cm	ft·lbf
Bearing retainer x Drive end frame		3.0	31	27 in.·lbf
Rectifier end frame x Drive end frame		4.5	46	40 in.·lbf
Cord clip x Rectifier end frame		5.4	55	48 in.·lbf
Generator pulley x Rotor		110.5	1,125	81
Rectifier holder x Coil lead on rectifier end frame		2.9	30	26 in.·lbf
Voltage regulator and brush holder x Rectifier end frame		2.0	20	18 in.·lbf
Plate terminal x Rectifier holder	Nut	4.4	45	39 in.·lbf
	Screw	3.9	39	35 in.·lbf
Rear end cover x Rectifier holder		4.4	45	39 in.·lbf
Terminal insulator x Rectifier holder		4.1	42	36 in.·lbf
Generator x Generator bracket		56	570	41
Generator x Adjusting bar		18	180	13

CLUTCH

SERVICE DATA

SS09Q–01

Pedal height from asphalt sheet	1MZ–FE	161.8 – 171.8 mm (6.370 – 6.764 in.)
Pedal height from asphalt sheet	5S–FE	156.8 – 166.8 mm (6.173 – 6.567 in.)
Push rod play at pedal top		1.0 – 5.0 mm (0.039 – 0.197 in.)
Pedal freeplay		5.0 – 15.0 mm (0.197 – 0.591 in.)
Clutch start switch ON–OFF Stroke		5.0 ± 0.5 mm (0.197 ± 0.020 in.)
Clutch release point from pedal full stroke end position		25 mm (0.98 in.) or more
Disc rivet head depth	Min.	0.3 mm (0.012 in.)
Disc runout	Max.	0.8 mm (0.031 in.)
Flywheel runout	Max.	0.1 mm (0.004 in.)
Diaphragm spring finger wear	Max. depth	0.6 mm (0.024 in.)
Diaphragm spring finger wear	Max. width	5.0 mm (0.197 in.)
Diaphragm spring tip non–alignment	Max.	0.5 mm (0.020 in.)

SS09R–01

TORQUE SPECIFICATION

Part tightened		N·m	kgf·cm	ft·lbf
Master cylinder installation nut		12	120	9
Clutch line		15	155	11
Release cylinder installation bolt		12	120	9
Bleeder plug		8.4	85	74 in.·lbf
Cruise control actuator bracket x Body		13	130	9
Starter x Transaxle		39	400	29
Clutch accumulator installation bolt		21	210	15
Clutch accumulator installation nut		27	270	20
Release fork support	1MZ–FE	47	480	35
Release fork support	5S–FE	39	400	29
Clutch cover x Flywheel		19	195	14

MANUAL TRANSAXLE (E153)

SS09O–01

SERVICE DATA

Input shaft		
3rd & 4th gears journal diameter	Min.	35.950 mm (1.4154 in.)
5th gear journal diameter	Min.	27.950 mm (1.1004 in.)
Runout	Max.	0.05 mm (0.0020 in.)
Output shaft		
1st & 2nd gears journal diameter	Min.	38.950 mm (1.5335 in.)
Runout	Max.	0.06 mm (0.0024 in.)
Oil pump clearance		
Rotor body	STD	0.10 – 0.16 mm (0.0039 – 0.0063 in.)
	Max.	0.30 mm (0.0118 in.)
Rotor tip	STD	0.08 – 0.15 mm (0.0031 – 0.0059 in.)
	Max.	0.30 mm (0.0118 in.)
Rotor side	STD	0.03 – 0.08 mm (0.0012 – 0.0031 in.)
	Max.	0.15 mm (0.0059 in.)
Gear thrust clearance		
1st & 3rd	STD	0.10 – 0.35 mm (0.0039 – 0.0138 in.)
	Max.	0.40 mm (0.0157 in.)
2nd	STD	0.10 – 0.45 mm (0.0039 – 0.0177 in.)
	Max.	0.50 mm (0.0197 in.)
4th	STD	0.10 – 0.55 mm (0.0039 – 0.0217 in.)
	Max.	0.60 mm (0.0236 in.)
5th	STD	0.10 – 0.57 mm (0.0039 – 0.0224 in.)
	Max.	0.65 mm (0.0256 in.)
Gear radial clearance		
1st & 4th	STD	0.009 – 0.051 mm (0.0004 – 0.0020 in.)
2nd & 3rd	STD	0.009 – 0.053 mm (0.0004 – 0.0021 in.)
5th	STD	0.009 – 0.050 mm (0.0004 – 0.0020 in.)
1st, 2nd, 3rd, 4th & 5th	Max.	0.070 mm (0.0028 in.)
Shift fork to hub sleeve clearance	Max.	1.0 mm (0.039 in.)
Synchronizer ring to gear clearance		
1st, 4th & 5th	Min.	0.8 mm (0.031 in.)
2nd & 3rd	Min.	0.7 mm (0.028 in.)
Drive in depth		
Control shaft cover oil seal		0 – 1.0 mm (0 – 0.039 in.)
Select inner lever slotted spring pin		0 ± 0.5 mm (0 ± 0.020 in.)
No.1 shift inner lever slotted spring pin		0 ± 0.5 mm (0 ± 0.020 in.)
No.2 shift inner lever slotted spring pin		0 ± 0.5 mm (0 ± 0.020 in.)
Input shaft snap ring thickness	Mark	
No.2 clutch hub	H	2.30 mm (0.0906 in.)
	J	2.35 mm (0.0925 in.)
	K	2.40 mm (0.0945 in.)
	L	2.45 mm (0.0965 in.)
	M	2.50 mm (0.0984 in.)
	N	2.55 mm (0.1004 in.)
	P	2.60 mm (0.1024 in.)

Input shaft snap ring thickness	Mark	
No.3 clutch hub	a	1.75 mm (0.0689 in.)
	b	1.80 mm (0.0709 in.)
	c	1.85 mm (0.0729 in.)
	d	1.90 mm (0.0748 in.)
	e	1.95 mm (0.0768 in.)
	f	2.00 mm (0.0787 in.)
	g	2.05 mm (0.0807 in.)
	h	2.10 mm (0.0827 in.)
	j	2.15 mm (0.0847 in.)
Ball bearing	1	2.35 mm (0.0925 in.)
	2	2.40 mm (0.0945 in.)
	3	2.45 mm (0.0965 in.)
	4	2.50 mm (0.0984 in.)
	5	2.55 mm (0.1004 in.)
	6	2.60 mm (0.1024 in.)
	7	2.65 mm (0.1043 in.)
	8	2.70 mm (0.1063 in.)
Output shaft snap ring thickness	Mark	
No.1 clutch hub	A	2.80 mm (0.1102 in.)
	B	2.85 mm (0.1122 in.)
	C	2.90 mm (0.1142 in.)
	D	2.95 mm (0.1161 in.)
	E	3.00 mm (0.1181 in.)
	F	3.05 mm (0.1201 in.)
	G	3.10 mm (0.1220 in.)
Differential pinion to side gear backlash	STD	0.05–0.20 mm (0.0020–0.0079 in.)
Differential side gear thrust washer thickness		
		0.80 mm (0.0315 in.)
		0.90 mm (0.0354 in.)
		1.00 mm (0.0394 in.)
		1.10 mm (0.0433 in.)
		1.20 mm (0.0472 in.)
		1.30 mm (0.0512 in.)
		1.40 mm (0.0551 in.)
Differential case side bearing preload (at starting)		
New bearing (Output shaft preload plus)		0.2 – 0.3 N·m (1.8 – 3.5 kgf·cm, 1.6 – 3.0 in.·lbf)
Reused bearing (Output shaft preload plus)		0.1 – 0.2 N·m (1.1 – 2.2 kgf·cm, 1.0 – 1.9 in.·lbf)
Differential side bearing adjusting shim thickness	Mark	
	0	2.00 mm (0.0787 in.)
	1	2.05 mm (0.0807 in.)
	2	2.10 mm (0.0827 in.)
	3	2.15 mm (0.0846 in.)
	4	2.20 mm (0.0866 in.)
	5	2.25 mm (0.0886 in.)
	6	2.30 mm (0.0906 in.)
	7	2.35 mm (0.0925 in.)
	8	2.40 mm (0.0945 in.)
	9	2.45 mm (0.0965 in.)
	A	2.50 mm (0.0984 in.)
	B	2.55 mm (0.1004 in.)
	C	2.60 mm (0.1024 in.)
	D	2.65 mm (0.1043 in.)
	E	2.70 mm (0.1063 in.)
	F	2.75 mm (0.1083 in.)
	G	2.80 mm (0.1102 in.)
	H	2.85 mm (0.1122 in.)

Output shaft bearing preload (at starting)		
New bearing		0.8 – 1.6 N·m (8 – 16 kgf·cm, 6.9 – 13.9 in.·lbf)
Reused bearing		0.5 – 1.0 N·m (5 – 10 kgf·cm, 4.3 – 8.7 in.·lbf)
Output shaft rear bearing adjusting shim thickness	Mark	
	0	1.30 mm (0.0512 in.)
	1	1.35 mm (0.0531 in.)
	2	1.40 mm (0.0551 in.)
	3	1.45 mm (0.0571 in.)
	4	1.50 mm (0.0591 in.)
	5	1.55 mm (0.0610 in.)
	6	1.60 mm (0.0630 in.)
	7	1.65 mm (0.0650 in.)
	8	1.70 mm (0.0669 in.)
	9	1.75 mm (0.0689 in.)
	A	1.80 mm (0.0709 in.)
	B	1.85 mm (0.0728 in.)
	C	1.90 mm (0.0748 in.)
	D	1.95 mm (0.0768 in.)
	E	2.00 mm (0.0787 in.)
	F	2.05 mm (0.0807 in.)
	G	2.10 mm (0.0827 in.)
	H	2.15 mm (0.0846 in.)
	J	2.20 mm (0.0866 in.)
	K	2.25 mm (0.0886 in.)
	L	2.30 mm (0.0906 in.)
	M	2.35 mm (0.0925 in.)
	N	2.40 mm (0.0945 in.)
	P	2.45 mm (0.0965 in.)
	Q	2.50 mm (0.0984 in.)

SS09P–01

TORQUE SPECIFICATION

Part tightened		N·m	kgf·cm	ft·lbf
Transaxle x Engine	17 mm head	64	650	47
	14 mm head A	46	470	34
(See page MX–4)	14 mm head B	37	380	27
Cruise control actuator x Body (w/ Cruise control)		13	130	9
Starter x Transaxle		39	400	29
Clutch release cylinder x Transaxle		12	120	9
Clutch acummulator x Transaxle	Bolt	21	210	15
	Nut	26	270	20
Clutch line bracket x Transaxle		12	120	9
Front wheel		103	1,050	76
Exhaust pipe support stay		33	330	24
Front exhaust pipe x Exhaust manifold		62	630	46
Front exhaust pipe x Center exhaust pipe		56	570	41
No.1 exhaust pipe support bracket x Front suspension member		33	330	24
Stabilizer bar link x Stabilizer bar		39	400	29
Stabilizer bar bracket x Front suspension member		19	195	14
PS gear assembly x Front suspension member		181	1,850	134
Front engine absorber x Transaxle		48	490	35
RH exhaust manifold stay		20	200	14
Front engine mounting insulator x Front suspension member	Silver bolt	44	450	33
	Green bolt	66	670	48
LH engine mounting insulator x Front suspension member		80	820	59
LH engine mounting bracket x Transaxle		64	650	47
Rear engine mounting insulator x Front suspension member		66	670	48
Steering return pipe x Front suspension member		10	100	7
Front suspension member with lower suspension arm	Bolt A	181	1,850	134
	Bolt B	32	330	24
(See page MX–4)	Nut C	36	370	27
Flywheel housing under cover x Transaxle		7.8	80	69 in.·lbf
Shift cable grommet retainer x Body		4.9	50	43 in.·lbf
Shift lever assembly x Body		12	120	9
No.2 selecting bellcrank with selecting bellcrank support		20	200	14
Shift and select lever shaft lock bolt		49	500	36
Shift and select lever shaft assembly x Transmission case		20	200	14
Transmission case cover x Transmission case		29	300	22
Breather plug		49	500	36
Output shaft lock nut		123	1,250	90
Shift fork and shift head set bolt		24	240	17
Rear bearing retainer x Transmission case		42	430	31
Straight screw plug		25	250	18
Straight screw plug (Reverse restrict pin)		13	130	9
Reverse idler gear shaft lock bolt		29	300	22
Transmission case x Transaxle case		29	300	22
Transmission oil pipe x Transaxle case		17	175	13
Reverse shift arm bracket assembly x Transaxle case		17	175	13

Transmission oil pump assembly x Transaxle case	17	175	13
Transaxle case receiver x Transaxle case	7.4	75	65 in.·lbf
Clutch release fork support	47	480	35
Control lever housing support bracket x Transaxle case	17	175	13
Vehicle speed sensor	17	175	13
Clutch release line bracket x Transaxle case	17	175	13
Back–up light switch	40	410	30
Filler and drain plug	49	500	36
No.1 and No.2 oil receiver pipe x Transmission case	17	175	13
Transmission oil cooler sub–assembly x Elbow	34	350	25
Elbow x Transaxle case	27	275	20
Transmission oil pump case x Oil pump cover	10	105	8
Transaxle case cover x Transaxle case	54	550	40
Differential left case x Differential right case	63	640	46
Ring gear set bolt	124	1,260	91

MANUAL TRANSAXLE (S51)

SS09M–01

SERVICE DATA

Input shaft roller bearing journal diameter	Min.	29.970 mm (1.799 in.)
Input shaft 3rd gear journal diameter	Min.	33.090 mm (1.3028 in.)
Input shaft 4th gear journal diameter	Min.	32.470 mm (1.2783 in.)
Input shaft 5th gear journal diameter	Min.	26.970 mm (1.0618 in.)
Input shaft runout	Max.	0.05 mm (0.0020 in.)
Output shaft roller bearing journal diameter	Min.	31.970 mm (1.2587 in.)
Output shaft 1st gear journal diameter	Min.	37.970 mm (1.4949 in.)
Output shaft 2nd gear journal diameter	Min.	31.990 mm (1.2594 in.)
Output shaft runout	Max.	0.05 mm (0.0020 in.)
Gear thrust clearance 1st	STD Max.	0.10 – 0.29 mm (0.0039 – 0.0114 in.) 0.35 mm (0.0138 in.)
Gear thrust clearance 2nd	STD Max.	0.20 – 0.44 mm (0.0079 – 0.0173 in.) 0.50 mm (0.0197 in.)
Gear thrust clearance 3rd	STD Max.	0.10 – 0.25 mm (0.0039 – 0.098 in.) 0.30 mm (0.0118 in.)
Gear thrust clearance 4th	STD Max.	0.20 – 0.45 mm (0.0079 – 0.0177 in.) 0.50 mm (0.0197 in.)
Gear thrust clearance 5th	STD Max.	0.20 – 0.40 mm (0.0079 – 0.0157 in.) 0.45 mm (0.0177 in.)
Gear radial clearance 1st, 2nd, 3rd, and 4th	STD Max.	0.009 – 0.053 mm (0.0004 – 0.0021 in.) 0.070 mm (0.0028 in.)
Gear radial clearance 5th	STD Max.	0.009 – 0.050 mm (0.0004 – 0.0020 in.) 0.070 mm (0.0028 in.)
Shift fork to hub sleeve clearance	Max.	1.0 mm (0.039 in.)
Synchronizer ring to gear clearance 1st, 3rd and 4th	Min.	0.6 mm (0.024 in.)
Synchronizer ring to gear clearance 2nd	Min.	0.7 mm (0.028 in.)
Differential case side bearing preload (at starting)(For use with SST)		0.8 – 1.6 N·m (8 – 16 kgf·cm, 6.9 – 13.9 in.·lbf)
Differential pinion to side gear backlash		0.05 – 0.20 mm (0.0020 – 0.0079 in.)
Drive in depth Input shaft front oil seal Reverse restrict pin slotted spring pin Shift and select lever shaft slotted spring pin		 0 – 0.5 mm (0 – 0.020 in.) 13.5 ± 0.5 mm (0.531 ± 0.020 in.) 23.5 ± 1.0 mm (0.925 ± 0.039 in.)
Differential side gear thrust washer thickness		0.95 mm (0.0374 in.) 1.00 mm (0.0394 in.) 1.05 mm (0.0413 in.) 1.10 mm (0.0433 in.) 1.15 mm (0.0453 in.) 1.20 mm (0.0472 in.)

Input shaft snap ring thickness		
No.2 clutch hub	Mark 1	1.95 – 2.00 mm (0.0768 – 0.0787 in.)
	Mark 2	2.00 – 2.05 mm (0.0787 – 0.0807 in.)
	Mark 3	2.05 – 2.10 mm (0.0807 – 0.0827 in.)
	Mark 4	2.10 – 2.15 mm (0.0827 – 0.0846 in.)
	Mark 5	2.15 – 2.20 mm (0.0846 – 0.0866 in.)
	Mark 6	2.20 – 2.25 mm (0.0866 – 0.0886 in.)
No.3 clutch hub	Mark 13	2.20 – 2.25 mm (0.0866 – 0.0886 in.)
	Mark 14	2.25 – 2.30 mm (0.0886 – 0.0906 in.)
	Mark 15	2.30 – 2.35 mm (0.0906 – 0.0925 in.)
	Mark 16	2.35 – 2.40 mm (0.0925 – 0.0945 in.)
	Mark 17	2.40 – 2.45 mm (0.0945 – 0.0965 in.)
	Mark 18	2.45 – 2.50 mm (0.0965 – 0.0984 in.)
	Mark 19	2.50 – 2.55 mm (0.0984 – 0.01004 in.)
	Mark 20	2.55 – 2.60 mm (0.1004 – 0.01024 in.)
	Mark 21	2.60 – 2.65 mm (0.1024 – 0.01043 in.)
	Mark 22	2.65 – 2.70 mm (0.1043 – 0.01063 in.)
	Mark 23	2.70 – 2.75 mm (0.1063 – 0.01083 in.)
	Mark 24	2.75 – 2.80 mm (0.1083 – 0.01102 in.)
	Mark 25	2.80 – 2.85 mm (0.1102 – 0.01122 in.)
	Mark 26	2.85 – 2.90 mm (0.1122 – 0.01142 in.)
	Mark 27	2.90 – 2.95 mm (0.1142 – 0.01161 in.)
Rear bearing	Mark A	2.15 – 2.20 mm (0.0846 – 0.0866 in.)
	Mark B	2.20 – 2.25 mm (0.0866 – 0.0886 in.)
	Mark C	2.25 – 2.30 mm (0.0886 – 0.0906 in.)
	Mark D	2.30 – 2.35 mm (0.0906 – 0.0925 in.)
	Mark E	2.35 – 2.40 mm (0.0925 – 0.0945 in.)
Differential side bearing adjusting shim thickness		
	Mark 1	1.90 mm (0.0748 in.)
	Mark 2	1.95 mm (0.0768 in.)
	Mark 3	2.00 mm (0.0787 in.)
	Mark 4	2.05 mm (0.0807 in.)
	Mark 5	2.10 mm (0.0827 in.)
	Mark 6	2.15 mm (0.0846 in.)
	Mark 7	2.20 mm (0.0866 in.)
	Mark 8	2.25 mm (0.0886 in.)
	Mark 9	2.30 mm (0.0906 in.)
	Mark 10	2.35 mm (0.0925 in.)
	Mark 11	2.40 mm (0.0945 in.)
	Mark 12	2.45 mm (0.0965 in.)
	Mark 13	2.50 mm (0.0984 in.)
	Mark 14	2.55 mm (0.1004 in.)
	Mark 15	2.60 mm (0.1024 in.)
	Mark 16	2.65 mm (0.1043 in.)
	Mark 17	2.70 mm (0.1063 in.)
	Mark 18	2.75 mm (0.1083 in.)
	Mark 19	2.80 mm (0.1102 in.)

SS09N–01

TORQUE SPECIFICATION

Part tightened		N·m	kgf·cm	ft·lbf
Transaxle x Engine	17 mm head	64	650	47
	14 mm head	46	470	34
Cruise control actuator x Body (w/ Cruise control)		13	130	9
Starter x Transaxle		37	378	28
Clutch release cylinder x Transaxle		12	120	9
Clutch line bracket x Transaxle	Bolt A	12	120	9
(See page MX–4)	Bolt B	6.9	70	61 in.·lbf
Manifold stay	Front side	42	425	31
Manifold stay	Rear side	39	400	29
Front wheel		103	1,050	76
Exhaust pipe bracket	Bolt	19	195	14
	Nut	33	330	24
Front exhaust pipe x Exhaust manifold		62	630	46
Front exhaust pipe x Center exhaust pipe		56	570	41
No.1 exhaust pipe support bracket x Front suspension member		33	330	24
Stabilizer bar link x Stabilizer bar		39	400	29
Stabilizer bar bracket x Front suspension member		19	195	14
PS gear assembly x Front suspension member		181	1,850	134
Front engine mounting insulator x Front suspension member	Silver bolt	44	450	33
	Green bolt	66	670	48
LH engine mounting insulator x Front suspension member		80	820	59
LH engine mounting bracket x Transaxle		64	650	47
Rear engine mounting insulator x Front suspension member		66	670	48
Steering return pipe x Front suspension member		10	100	7
Front suspension member with lower suspension arm	Bolt A	181	1,850	134
	Bolt B	32	330	24
(See page MX–4)	Nut C	36	370	27
LH stiffener plate		37	380	27
RH stiffener plate		39	400	29
Rear end plate		9.3	95	82 in.·lbf
Shift cable grommet retainer x Body		4.9	50	43 in.·lbf
Shift lever assembly x Body		12	120	9
Transmission case x Transaxle case		29	300	22
Transmission case x Case cover		29	300	22
Transmission case protector		18	185	13
Rear bearing retainer		42	430	31
Output shaft front bearing lock plate		18	185	13
Transaxle case receiver set bolt		7.4	75	65 in.·lbf
5th driven gear lock nut		123	1,250	90
Reverse idler shaft lock bolt		29	300	22
Control shaft cover		37	375	27
Control shift lever x Lever shaft		6.4	65	56 in.·lbf
Ring gear x Differential case		83	850	61
Selecting bellcrank x Transmission case		37	380	27

Engine mount bracket x Transaxle	52	530	38
Reverse shift arm bracket	18	185	13
No.3 shift fork x Shift fork shaft	18	185	13
Lock ball assembly	29	300	22
Filler and Drain plugs	49	500	36
Back–up light switch	44	450	33
Differential side bearing retainer	18	185	13
Release bearing retainer	7.4	75	65 in.·lbf
Straight screw plug	13	130	9
Vehicle speed sensor driven gear	5.4	55	48 in.·lbf
Clutch release fork support	39	400	29

AUTOMATIC TRANSAXLE (A140E)

SS0AS–01

SERVICE DATA

Line pressure (Wheel locked)		
	Engine idling	
	D position	363 – 422 kPa (3.7 – 4.3 kgf/cm^2, 53 – 61 psi)
	R position	618 – 794 kPa (6.3 – 8.1 kgf/cm^2, 90 – 115 psi)
	at stall (Throttle valve fully opened)	
	D position	735 – 862 kPa (7.5 – 8.8 kgf/cm^2, 107 – 125 psi)
	R position	1,373 – 1,608 kPa (14.0 – 16.4 kgf/cm^2, 199 – 233 psi)
Engine stall revolution	D and R positions	2,450 ± 150 rpm
Time lag	N → D position	Less than 1.2 seconds
	N → R position	Less than 1.5 seconds
Engine idle speed	A/C OFF and N range	750 ± 50 rpm
Throttle cable adjustment (Throttle valve fully opened)		Between boot end face and inner cable stopper 0 – 1 mm (0 – 0.04 in.)
Drive plate runout	Max.	0.20 mm (0.0079 in.)
Torque converter runout	Max.	0.30 mm (0.0118 in.)
Torque converter installation distance		More than 13.0 mm (0.512 in.)
Differential oil seal drive in depth	LH side	2.7 ± 0.5 mm (0.106 ± 0.020 in.)
	RH side	0 ± 0.5 mm (0 ± 0.020 in.)
Shift point		
D position		
(Throttle valve fully opened)	1 → 2	58 – 63 km/h (36 – 39 mph)
	2 → 3	109 – 117 km/h (68 – 73 mph)
	3 → O/D	145 – 151 km/h (90 – 94 mph)
	O/D → 3	138 – 146 km/h (86 – 91 mph)
	3 → 2	100 – 108 km/h (62 – 67 mph)
	2 → 1	51 – 56 km/h (32 – 35 mph)
(Throttle valve fully closed)	O/D → 3	38 – 43 km/h (24 – 27 mph)
	3 → O/D	18 – 22 km/h (11 – 14 mph)
2 position		
(Throttle valve fully opened)	1 → 2	58 – 63 km/h (36 – 39 mph)
	3 → 2	106 – 114 km/h (66 – 71 mph)
	2 → 1	51 – 56 km/h (32 – 35 mph)
L position		
(Throttle valve fully opened)	2 → 1	47 – 51 km/h (29 – 32 mph)
*1: The maximum vehicle speed for manual shift down when shifting down from D to 2.		
*2: The maximum vehicle speed for manual shift down when shifting down from 2 to L.		
Lock–up point (Throttle valve fully opened)		
D position		
3rd Gear (O/D main switch OFF)		
	Lock–up ON	67 – 72 km/h (42 – 45 mph)
	Lock–up OFF	64 – 69 km/h (40 – 43 mph)
O/D gear		
	Lock–up ON	67 – 72 km/h (42 – 45 mph)
	Lock–up OFF	64 – 69 km/h (40 – 43 mph)

SS0AT–01

TORQUE SPECIFICATION

Part tightened		N·m	kgf·cm	ft·lbf
Transaxle x Starter		42	430	31
Transaxle x Rear end plate		25	250	18
Transaxle x No.1 exhaust pipe support bracket		19	195	14
Transaxle x Engine		66	670	48
Torque converter clutch x Drive plate		27	280	20
Body x Front lower brace	Bolt	181	1,850	134
	Nut	36	370	27
Body x Rear lower brace	19 mm head bolt	181	1,850	134
	14 mm head bolt	32	330	24
	Nut	36	370	27
Front suspension member x FR engine mounting	TMC made	80	820	59
	TMMK made: Green color bolt	66	670	48
	TMMK made: Silver color bolt	44	450	32
Front suspension member x RR engine mounting		66	670	48
Front suspension member x LH engine mounting		80	820	59
Transaxle x LH engine mounting		64	650	47
Front suspension member x Steering return pipe mounting bracket		10	100	7
Front suspension member x Stabilizer bar bracket		19	195	14
Stabilizer bar x Stabilizer bar link		39	400	29
Ball joint x Lower suspension arm		127	1,300	94
Steering gear housing set bolt x Nut		181	1,850	134
Exhaust manifold x Front exhaust pipe		62	630	46
Front suspension member x Exhaust pipe No.1 support bracket		33	330	24
Front exhaust pipe x Center exhaust pipe		56	570	41
No.1 exhaust pipe support bracket x Exhaust pipe clamp		33	330	24
Axle hub nut		294	3,000	217
Steering knuckle x Tie rod end		49	500	36
Vehicle speed sensor x Transaxle		16	160	12
Park/neutral position switch x Transaxle	Bolt	5.4	55	48 in.·lbf
	Nut	6.9	70	61 in.·lbf
Park/neutral position switch x Control shaft lever		13	130	9
Control shaft lever x Control cable		15	150	11
Oil pan x Drain plug		49	500	36
Oil pan x Transaxle		4.9	50	43 in.·lbf
Valve body x Manual valve body		10	100	7
Valve body x Transaxle		10	100	7
Drive shaft center bearing lock bolt		32	330	24
Stiffener plate	Front side	42	430	31
	Rear side	39	400	29
Exhaust manifold stay	Front side	42	430	31
	Rear side	39	400	29

AUTOMATIC TRANSAXLE (A541E)

SS0BL–01

SERVICE DATA

Line pressure (wheel locked)	Engine idling	
	D position	401 – 461 kPa (4.1 – 4.7 kgf/cm^2, 58 – 66 psi)
	R position	804 – 882 kPa (8.2 – 9.0 kgf/cm^2, 117 – 128 psi)
	at stall (Throttle valve fully opened)	
	D position	1,138 – 1,236 kPa (11.6 – 12.6 kgf/cm^2, 165 – 179 psi)
	R position	1,716 – 1,854 kPa (17.5 – 18.9 kgf/cm^2, 249 – 269 psi)
Engine stall revolution		2,600 ± 150 rpm
Time lag	N → D position	Less than 1.2 seconds
	N → R position	Less than 1.5 seconds
Engine idle speed (A/C OFF)		
	N position	700 ± 50 rpm
Throttle cable adjustment (Throttle valve fully opened)		Between boot and face and inner cable stopper 0 – 1 mm (0 – 0.04 in.)
Drive plate runout	Max.	0.3 mm (0.0118 in.)
Torque converter clutch runout	Max.	0.20 mm (0.0079 in.)
Torque converter clutch installation distance		More than 13.7 mm (0.539 in.)
Lock–up point	(Throttle valve opening 5%)	
3rd gear (O/D main switch OFF)	Lock–up ON	60 – 65 km/h (37 – 40 mph)
	Lock–up OFF	53 – 58 km/h (33 – 36 mph)
O/D gear	Lock–up ON	60 – 64 km/h (37 – 40 mph)
	Lock–up OFF	53 – 58 km/h (33 – 36 mph)
Shift schedule		
D position		
(Throttle valve fully opened)	1 → 2	60 – 66 km/h (37 – 41 mph)
	2 → 3	112 – 121 km/h (70 – 75 mph)
	3 → O/D	174 – 183 km/h (108 – 114 mph)
	O/D → 3	167 – 176 km/h (104 – 109 mph)
	3 → 2	104 – 112 km/h (65 – 70 mph)
	2 → 1	50 – 55 km/h (31 – 34 mph)
(Throttle valve fully closed)	3 → O/D	35 – 40 km/h (22 – 25 mph)
	O/D → 3	20 – 25 km/h (12 – 16 mph)
2 position		
(Throttle valve fully opened)	1 → 2	60 – 66 km/h (37 – 41 mph)
	3 → 2	122 – 130 km/h (76 – 81 mph)
	2 → 1	50 – 55 km/h (31 – 34 mph)
L position		
(Throttle valve fully opened)	3 → 2	106 – 115 km/h (66 – 71 mph)
	2 → 1	54 – 59 km/h (34 – 37 mph)

SS0BM–01

TORQUE SPECIFICATION

Part tightened		N·m	kgf·cm	ft·lbf
Front engine front mounting insulator x Front frame assembly	TMC:	80	820	59
	TMMK:			
	Green color bolt	66	670	48
	Silver color bolt	44	450	32
Rear engine mounting insulator x Front frame assembly		80	820	59
LH transaxle mounting insulator x Transaxle		64	650	47
Engine mounting absorber x Front frame assembly		48	490	35
Transaxle x Engine	17 mm bolt	66	670	48
Transaxle x Engine	12 mm bolt	48	490	35
Torque converter clutch x Drive plate		41	420	30
Valve body x Transaxle case		11	110	8
Oil strainer x Valve body		11	110	8
Oil pan x Transaxle case		7.8	80	69 in.·lbf
Oil pan drain plug		49	500	36
Park/Neutral position switch x Transaxle case (bolt)		5.4	55	48 in.·lbf
Park/Neutral position switch (nut)		6.9	70	61 in.·lbf
B_3 apply pipe retainer		11	110	8
Connector clamp		11	110	8
Manual valve body x Transaxle case		11	110	8
Detent spring x Manual valve body		11	110	8
Oil pipe bracket		10	100	7
Steering gear housing x Front suspension member		181	1,850	134
Stabilizer bar bracket		19	195	14
Vehicle speed sensor x Transaxle case		4.9	50	43 in.·lbf
Direct clutch speed sensor x Transaxle case		11	110	8
Transfer lubrication apply pipe retainer		11	110	8
Exhaust manifold bracket x Transaxle case	Except California	20	200	14
	California	34	350	25
Exhaust manifold plate	Except California	20	200	14
	California	34	350	25
Front frame x Body	19 mm	181	1,850	134
Front frame x Body	14 mm	32	330	24
Front frame x Body	Nut	36	370	27
Exhaust front pipe x Exhaust center pipe		56	570	41
Exhaust manifold x Exhaust front pipe		62	630	46
Exhaust front pipe support stay x Exhaust front pipe support bracket		33	330	24
Exhaust pipe support x Front frame		33	330	24
Starter x Torque converter clutch housing		39	400	29
Transaxle control shaft lever x Park/neutral position switch		15	150	11
Throttle cable adjusting nut		15	150	11
Drive plate x Crankshaft		83	850	61
Shift control cable x Transaxle control shaft lever		15	150	11
Throttle cable retaining plate set bolt		5.4	55	48 in.·lbf
Shift solenoid valve No.1, No.2, SL, SLN x Valve body		6.6	67	58 in.·lbf

Front wheel nut	103	1,050	76
Exhaust front pipe support bracket x Body	21	210	15
PS reseroir pipe x Front frame	10	100	7
Engine hood x Hood hinge	26	265	19

SUSPENSION AND AXLE

SERVICE DATA

SS04W–01

Cold tire inflation pressure (Normal driving)	P195/70R14 90S	Front, Rear*1	210 kPa (2.1 kgf/cm2, 30 psi)
		Front, Rear*2	210 kPa (2.1 kgf/cm2, 30 psi)
	P205/65R15 92H	Front, Rear*1	220 kPa (2.2 kgf/cm2, 32 psi)
		Front, Rear*2	200 kPa (2.0 kgf/cm2, 29 psi)
Cold tire inflation pressure (Trailer towing)	P195/70R14 90S	Front, Rear*3	210 kPa (2.1 kgf/cm2, 30 psi)
		Front, Rear*4	240 kPa (2.4 kgf/cm2, 35 psi)
	P205/65R15 92H	Front, Rear*3	220 kPa (2.2 kgf/cm2, 32 psi)
		Front, Rear*4	240 kPa (2.4 kgf/cm2, 35 psi)
Front wheel alignment	Vehicle height 195/70R14	Front*5	212 mm (8.35 in.)
		Rear*6	264 mm (10.39 in.)
	205/65R15	Front*5	215 mm (8.46 in.)
		Rear*6	266 mm (10.49 in.)
	Camber 5S – FE	–0°36' ± 45' (0.6° ± 0.75°)	
	1MZ – FE	–0°37' ± 45' (0.62° ± 0.75°)	
	Left – right error	45' (0.75°) or less	
	Caster 5S – FE	2°10' ± 45' (2.17° ± 0.75°)	
	1MZ – FE	2°11' ± 45' (2.18° ± 0.75°)	
	Left – right error	45' (0.75°) or less	
	Steering axis inclination 5S – FE	13°01' ± 45' (13.02° ± 0.75°)	
	1MZ – FE	13°04' ± 45' (13.07° ± 0.75°)	
	Left – right error	45' (0.75°) or less	
	Toe–in (Total)	0° ± 12' (0° ± 0.2°)	
		0 ± 2 mm (0 ± 0.08 in.)	
	Rack end length difference	1.5 mm (0.059 in.) or less	
	Wheel angle 195/70R14	Inside wheel	37°12' ± 2° (37.2° ± 2°)
		Outside wheel	32°21' (32.45°)
	205/65R15	Inside wheel	35°47' ± 2° (35.78° ± 2°)
		Outside wheel	31°25' (31.42°)
Rear wheel alignment	Camber 5S – FE	–0°42' ± 45' (–0.7° ± 0.75°)	
	1MZ – FE	–0°45' ± 45' (–0.75° ± 0.75°)	
	Left – right error	45' (0.75°) or less	
	Toe–in (Total)	0°24' ± 12' (0.4° ± 0.2°)	
		4 ± 2 mm (0.16 ± 0.08 in.)	
	No.2 lower suspension arm length difference	1 mm (0.04 in.) or less	

*1: For all loads including rated loads
*2: For reduced loads (1 to 4 passengers)
*3: For driving under 160 km/h (100 mph)
*4: For driving at 160 km/h (100 mph) or over
*5: Front measuring point
Measure from the ground to the center of the front side lower suspension arm mounting bolt.
*6: Rear measuring point
Measure from the ground to the center of the strut rod mounting bolt.

Front axle	Axle bearing backlash		0.05 mm (0.0020 in.)
	Axle hub deviation		0.05 mm (0.0020 in.)
Front drive shaft	Drive shaft standard length		
	5S – FE	LH	609.2 ± 2.0 mm (23.984 ± 0.079 in.)
		RH	867.3 ± 2.0 mm (34.146 ± 0.079 in.)
	1MZ – FE (M/T)	LH	601.5 ± 2.0 mm (23.681 ± 0.079 in.)
		RH	871.6 ± 2.0 mm (34.315 ± 0.079 in.)
	1MZ – FE (A/T)	LH	586.0 ± 2.0 mm (23.071 ± 0.079 in.)
		RH	881.6 ± 2.0 mm (34.709 ± 0.079 in.)
Front suspension	Lower ball joint turning torque		1.0 – 3.4 N·m (10 – 35 kgf·cm, 8.7 – 30 in.·lbf)
	Stabilizer bar link turning torque		0.05 – 1.0 N·m (0.5 – 10 kgf·cm, 0.4 – 8.7 in.·lbf)
Rear axle	Axle bearing backlash		0.05 mm (0.0020 in.)
	Axle hub deviation		0.07 mm (0.0028 in.)
Rear suspension	No.2 lower suspension arm length		512.3 mm (20.169 in.)
	Stabilizer bar link turning torque		0.05 – 1.0 N·m (0.5 – 10 kgf·cm, 0.4 – 8.7 in.·lbf)

SS04X–01

TORQUE SPECIFICATION

Part tightened	N·m	kgf·cm	ft·lbf
FRONT:			
Hub nut	103	1,050	76
Tie rod end lock nut	74	750	54
Steering knuckle x Shock absorber	211	2,150	156
Steering knuckle x Brake caliper	107	1,090	79
Steering knuckle x Tie rod end	49	500	36
Axle hub x Drive shaft	294	3,000	217
Lower ball joint x Lower suspension arm	127	1,300	94
Lower ball joint x Steering knuckle	123	1,250	90
Steering knuckle x Disc brake dust cover	8.3	85	74 in.·lbf
Drive shaft center bearing lock bolt	32	330	24
Suspension support x Body	80	820	59
Suspension support x Piston rod	49	500	36
ABS speed sensor set bolt	8.0	82	71 in.·lbf
Flexible hose and ABS speed sensor wire harness x Shock absorber	29	300	22
Lower suspension arm set bolt	206	2,100	152
Stabilizer bar bracket x Suspension member	19	195	14
Stabilizer bar link set bolt	39	400	29
REAR:			
Hub nut	103	1,050	76
No.2 lower suspension arm lock nut	56	570	41
Brake caliper x Rear axle carrier	47	475	34
Axle hub bearing set bolt	80	820	59
Shock absorber x Rear axle carrier New nut Reused nut (apply engine oil the threads)	255 196	2,600 2,000	188 145
Flexible hose x Shock absorber	29	300	22
ABS speed sensor set bolt	8.0	82	71 in.·lbf
ABS speed sensor wire harness x Shock absorber	5.5	56	49 in.·lbf
Rear side seatback set bolt	18	185	13
Suspension support x Body	39	400	29
Suspension support x Piston rod	49	500	36
Exhaust center pipe set nut	56	570	41
Parking brake cable set bolt	5.4	55	48 in.·lbf
Lower suspension arm x Suspension member	181	1,850	134
Lower suspension arm x Rear axle carrier	181	1,850	134
Strut rod x Body	113	1,150	83
Strut rod x Rear axle carrier	113	1,150	83
Suspension member x Body	51	520	38
Suspension member lower stopper sub–assembly x Body	38	390	28
Stabilizer bar bracket x Suspension member	19	195	14
Stabiliser bar link set nut	39	400	29

BRAKE

SERVICE DATA

SS09X–01

Brake pedal height (from asphalt sheet)		152.0 – 162.0 mm (5.984 – 6.378 in.)
Brake pedal freeplay		1 – 6 mm (0.04 – 0.24 in.)
Brake pedal reserve distance at 490 N (50 kgf, 110.2 lbf)		More than 70 mm (2.76 in.)
Brake booster push rod to piston clearance (w/SST)		0 mm (0 in.)
Front brake pad thickness (5S–FE engine)	STD	12.0 mm (0.472 in.)
Front brake pad thickness (1MZ–FE engine)	STD	11.0 mm (0.433 in.)
Front brake pad thickness	Minimum	1.0 mm (0.039 in.)
Front brake disc thickness	STD	28.0 mm (1.102 in.)
Front brake disc thickness	Minimum	26.0 mm (1.024 in.)
Front brake disc runout	Maximum	0.05 mm (0.0020 in.)
Rear brake drum inside diameter	STD	228.6 mm (9.000 in.)
Rear brake drum inside diameter	Maximum	230.6 mm (9.079 in.)
Rear brake shoe lining thickness	STD	5.0 mm (0.197 in.)
Rear brake shoe lining thickness	Minimum	1.0 mm (0.039 in.)
Rear brake drum to shoe clearance		0.6 mm (0.024 in.)
Rear brake pad thickness	STD	10.0 mm (0.394 in.)
Rear brake pad thickness	Minimum	1.0 mm (0.039 in.)
Rear brake disc thickness	STD	10.0 mm (0.394 in.)
Rear brake disc thickness	Minimum	9.0 mm (0.354 in.)
Rear brake disc runout	Maximum	0.15 mm (0.0059 in.)
Rear brake disc inside diameter	STD	170 mm (6.69 in.)
Rear brake disc inside diameter	Maximum	171 mm (6.73 in.)
Parking brake lining thickness for rear disc brake	STD	2.0 mm (0.079 in.)
Parking brake lining thickness for rear disc brake	Minimum	1.0 mm (0.039 in.)
Parking brake lever travel at 196 N (20 kgf, 44 lbf)		5 – 8 clicks
Parking brake clearance between rear shoe and lever		Less than 0.35 mm (0.0138 in.)
Parking brake adjusting shim thickness for rear disc brake		0.3 mm (0.012 in.) 0.6 mm (0.024 in.) 0.9 mm (0.035 in.)

SS09Y–03

TORQUE SPECIFICATION

Part tightened		N·m	kgf·cm	ft·lbf
Master cylinder x Piston stopper bolt		10	100	7
Master cylinder x Reservoir		1.7	18	16 in.·lbf
Master cylinder x Brake booster		13	130	9
Brake line union nut	10 mm nut	15	155	11
	12 mm nut	20	200	14
Brake booster clevis lock nut		25	260	19
Brake booster x Pedal bracket		13	130	9
Brake pedal x Pedal bracket		39	400	29
Pedal bracket x Instrument panel reinforcement		13	130	9
Front brake caliper installation bolt		34	350	25
Bleeder plug		8.3	85	74 in.·lbf
Front brake torque plate x Steering knuckle		107	1,090	79
Front brake caliper x Flexible hose		29	300	21
Flexible hose x Shock absorber bracket		29	300	21
Rear drum brake wheel cylinder x Backing plate		10	100	7
Parking brake cable bracket x Backing plate		7.8	80	69 in.·lbf
Rear brake caliper installation bolt		20	200	14
Rear disc brake cariper main pin installation bolt		26	270	20
Rear brake caliper x Flexible hose		29	300	21
Rear brake torque plate x Rear axle carrier		47	475	34
Proportioning valve installation bolt		8.8	90	78 in.·lbf
ABS actuator x Actuator bracket	DENSO type	5.4	55	48 in.·lbf
ABS actuator x Actuator bracket	BOSCH type	9.0	92	80 in.·lbf
ABS actuator x ECU	BOSCH type	2.6	27	23 in.·lbf
ABS & TRAC actuator x Actuator bracket		5.4	55	48 in.·lbf
ABS (& TRAC) actuator bracket x Body		19	195	14
Front speed sensor installation bolt		7.8	80	69 in.·lbf
Front speed sensor harness clamp bolt		5.4	55	48 in.·lbf
Rear speed sensor installation bolt		7.8	80	69 in.·lbf
Rear speed sensor harness clamp bolt		5.4	55	48 in.·lbf

STEERING

SS06L–03

SERVICE DATA

ON–VEHICLE INSPECTION		
Steering wheel freeplay	Maximum	30 mm (1.18 in.)
5S–FE Engine :		
Drive belt tension	New belt	95 – 145 lbf
Drive belt tension	Used belt	60 – 100 lbf
1MZ–FE Engine :		
Drive belt tension	New belt	150 – 185 lbf
Drive belt tension	Used belt	95 – 135 lbf
Fluid level rise	Maximum	5 mm (0.20 in.)
Fluid pressure at idle speed with valve closed	Minimum	7,845 kPa (80 kgf/cm^2, 1,138 psi)
Steering effort at idle speed	Maximum	5.9 N·m (60 kgf·cm, 52 in.·lbf)
PS VANE PUMP		
5S–FE and 1MZ–FE Engines:		
Vane pump rotating torque	Maximum	0.3 N·m (2.8 kgf·cm, 2.4 in.·lbf)
Oil clearance between pump shaft and bushing	STD	0.03 – 0.05 mm (0.0012 – 0.0020 in.)
Oil clearance between pump shaft and bushing	Maximum	0.07 mm (0.0028 in.)
Vane plate height	Minimum	8.6 mm (0.339 in.)
Vane plate thickness	Minimum	1.397 mm (0.0550 in.)
Vane plate length	Minimum	14.991 mm (0.5902 in.)
Clearance between the rotor groove and plate	Maximum	0.035 mm (0.0014 in.)
Vane plate length	Pump rotor and cam ring mark	
	NONE	14.999 – 15.001 mm (0.59051 – 0.59059 in.)
	1	14.997 – 14.999 mm (0.59043 – 0.59051 in.)
	2	14.995 – 14.997 mm (0.59035 – 0.59043 in.)
	3	14.993 – 14.995 mm (0.59027 – 0.59035 in.)
	4	14.991 – 14.993 mm (0.59020 – 0.59027 in.)
Spring free length	Minimum	32.3 mm (1.272 in.)
PS GEAR		
Steering rack runout	Maximum	0.30 mm (0.0118 in.)
Total preload (Control valve rotating torque)		0.8 – 1.4 N·m (8 – 14 kgf·cm, 6.9 – 12.2 in.·lbf)

SS06M–01

TORQUE SPECIFICATION

Part tightened		N·m	kgf·cm	ft·lbf
STEERING COLUMN				
Steering wheel pad set screw (Torx screw)		7.1	72	63 in.·lbf
Steering wheel set nut		35	360	26
Intermediate shaft assembly x Control valve shaft		35	360	26
Steering column assembly x Intermediate shaft assembly		35	360	26
Steering column assembly set nut		25	260	19
Turn signal bracket x Column tube		7	70	61 in.·lbf
Lower column tube attachment x Column tube		19	195	14
PS VANE PUMP				
5S–FE and 1MZ–FE Engines:				
Pressure feed tube x Control valve housing	5S–FE Engine	32 (25)	326 (250)	24 (18)
Pressure feed tube x Pressure feed tube	1MZ–FE Engine	20 (25)	203 (250)	15 (18)
Clamp plate set nut	5S–FE Engine	10	100	7
Clamp plate set nut	1MZ–FE Engine	7.8	80	69 in.·lbf
PS vane pump set bolt	A bolt	29 (43)	293 (440)	21 (32)
PS vane pump set bolt	B bolt	43	440	32
Oil pressure switch x Union bolt		21	210	15
Union bolt x Pressure feed tube		52	525	38
Vane pump pulley set nut		43	440	32
Front bracket x Rear bracket		43	440	32
Suction port union set bolt		13	130	9
Pressure port union		83	850	62
Rear housing set bolt		24	240	17
PS GEAR				
Pressure feed tube clamp plate set nut		10	100	7
Pressure feed and return tubes x Control valve housing		32 (25)	326 (250)	24 (18)
Stabilizer bar set bolt		19	195	14
PS gear assembly set bolt and nut		181	1,850	134
Turn pressure tube union nut		10 (13)	102 (130)	7 (9)
Tie rod end lock nut		74	750	54
Rack x Rack end		60 (83)	615 (850)	45 (62)
Rack guide spring cap lock nut		50 (69)	513 (700)	37 (51)
Rack housing cap		59	600	43
Selt–locking nut		25	250	18
Control valve housing set bolt		18	185	13

( ): For use without SST

SUPPLEMENTAL RESTRAINT SYSTEM

SS061–17

TORQUE SPECIFICATION

Part tightened		N·m	kgf·cm	ft·lbf
Steering wheel		35	360	26
Steering wheel pad		7.1	72	63 in.·lbf
Front passenger airbag assembly x Instrument panel reinforcement		20	205	15
Front seat installation bolt		37	375	27
Seatback frame set bolt (See page RS–49)	Bolt A Bolt B	18 15	185 150	13 11
Airbag sensor assembly		20	205	15
Front airbag sensor		20	205	15
Side airbag sensor assembly		20	205	15
Front seat outer belt retractor	Upper bolt Lower bolt	7.5 42	76 430	66 in.·lbf 31

BODY ELECTRICAL

SERVICE DATA

SS0B0–05

TURN SIGNAL FLASHER	
Flashes/ Minute	60 – 120
SPEEDOMETER (ON–VEHICLE)	
USA:	
Standard indication (mph)	Allowable range (mph)
20	18 – 24
40	38 – 44
60	56 – 66
80	78 – 88
100	98 – 110
120	118 – 132
CANADA:	
Standard indication (km/h)	Allowable range (km/h)
20	17 – 24
40	38 – 46
60	57.5 – 67
80	77 – 88
100	96 – 109
120	115 – 130
140	134 – 151.5
160	153 – 173
TACHOMETER (ON–VEHICLE)/ DC 13.5 V 25 ˚C at (77 ˚F)	
Standard indication	Allowable range
700	630 – 770
1,000	900 – 1,100
2,000	1,850 – 2,150
3,000	2,800 – 3,200
4,000	3,800 – 4,200
5,000	4,800 – 5,200
6,000	5,750 – 6,250
7,000	6,700 – 7,300
FUEL RECEIVER GAUGE	
A – B	Approx. 126.2 Ω
A – C	Approx. 280.5 Ω
B – C	Approx. 154.3 Ω
FUEL SENDER GAUGE	
Float position mm (in.)	Resistance (Ω)
F: Approx. –91.1 (–3.587)	Approx. 3.0
1/2: Approx. –34.2 (–1.346)	Approx. 31.7
E: Approx. 30.8 (1.213)	Approx. 110.0
ENGINE COOLANT TEMPERATURE RECEIVER GAUGE (Resistance)	
A – B	Approx. 175.7 Ω
A – C	Approx. 54.0 Ω

B – C	Approx. 229.7 Ω
ENGINE COOLANT TEMPERATURE SENDER GAUGE (Resistance)	
Temperature ˚C (˚F)	Resistance (Ω)
50 (122.0)	274
120 (248.0)	26.4

BODY

TORQUE SPECIFICATION

SS0BY–01

Part tightened	N·m	kgf·cm	ft·lbf
FRONT BUMPER	–	–	–
Front bumper cover x Body	5.5	55	49 in.·lbf
Front bumper reinforcement x Body	34	350	25
REAR BUMPER	–	–	–
Rear bumper cover x Body	5.0	50	43 in.·lbf
Rear bumper reinforcement x Body	34	350	25
HOOD	–	–	–
Hood hinge x Hood	26	260	19
Hood lock x Body	8.0	80	71 in.·lbf
FRONT AND REAR DOOR	–	–	–
Front door hinge x Body	31	310	22
Rear door hinge x Body	26	260	19
Door hinge x Door panel	26	260	19
Door lock striker x Body	26	260	19
Outside rear view mirror x Front door panel	5.5	55	49
Door inside handle x Door panel	3.5	35	31 in.·lbf
Door glass x Window regulator	8.0	80	71 in.·lbf
Window regulator x Door panel	5.5	55	49 in.·lbf
Door lock x Door panel	5.0	50	43 in.·lbf
Door outside handle x Door panel	7.0	70	61 in.·lbf
Door check x Body	30	300	22
Door check x Door panel	8.0	80	71 in.·lbf
LUGGAGE COMPARTMENT DOOR AND HINGE	–	–	–
Luggage door hinge x Luggage door	8.0	80	71 in.·lbf
Luggage door lock striker x Body	5.5	55	49 in.·lbf
Luggage door lock x Luggage door	5.5	55	49 in.·lbf
FRONT WIPER AND WASHER	–	–	–
Wiper motor assembly x Body	24	245	18
Wiper arm x Wiper pivot	5.5	55	49 in.·lbf
SLIDING ROOF	–	–	–
Sliding roof assembly x Body	5.5	55	49 in.·lbf
INSTRUMENT PANEL	–	–	–
Front passenger airbag assembly x Reinforcement	20	200	14
Steering wheel lock nut	35	360	26
SEAT	–	–	–
Front Seat (Power Seat for TMC Made)	–	–	–
Hinge cover x Seatback frame	18	185	13
Seatback frame x Power seat adjuster	15	150	11
Seatback frame x Side airbag assembly	6.0	61	53 in.·lbf
Front Seat (Manual Seat for TMC Made)	–	–	–
Front seat adjuster x Body	37	375	27

Front seat inner upper track x Seat cushion	18	185	13
Side Airbag assembly x Seatback frame	18	185	13
Seatback assembly x Seat cushion frame	6.0	61	53 in.·lbf
Front Seat (Power Seat for TMMK Made)	–	–	–
Side airbag assembly x Seat cushion frame	6.0	61	53 in.·lbf
Front Seat (Manual Seat for TMC Made)	–	–	–
Side airbag assembly x Seat cushion frame	6.0	61	53 in.·lbf
Rear Seat (TMC Made)	–	–	–
Seatback hinge x Body	18	185	13
Rear seatback lock control x Rear seatback frame	17.5	178	12.5
Rear Seat (TMMK Made)	–	–	–
Seatback pad (RH bolt) x Body	7.8	79	69 in.·lbf
Seatback pad (center bolt) x Body	42	428	31
Child restraint seat x Body	13	130	9
Seatback hinge x Body	18	185	13
Rear seatback lock control x Rear seatback frame	17.5	178	12.5
SEAT BELT	–	–	–
Front Seat belt	–	–	–
Shoulder anchor x Adjustable anchor	42	420	31
Adjustable anchor x Body	42	420	31
Inner belt x Seat	42	420	31
Retractor x Body	7.8	79	69 in.·lbf
Floor anchor x Body	42	420	31
Rear Seat Belt	–	–	–
Lap outer belt anchor x Body	42	420	31
ELR x Body	42	420	31
Inner belt x Body	42	420	31
Center belt x Body	42	420	31

AIR CONDITIONING

SS05V–02

SERVICE DATA

Refrigerant charge volume	800 ± 50 g (28.22 ± 1.76 oz.)
Drive belt tension	–
New belt	165 ± 26 lbf
Used belt	110 ± 11 lbf
Idle–up speed	–
Magnetic clutch not engaged	700 ± 50 rpm
Magnetic clutch engaged	700 ± 50 rpm
Magnetic clutch clearance	0.5 ± 0.15 mm (0.020 ± 0.0059 in.)

SS05W–06

TORQUE SPECIFICATION

Part tightened		N·m	kgf·cm	ft·lbf
Compressor x Discharge hose		10	100	7
Compressor x Suction hose		10	100	7
Condenser x Disaharge hose		10	100	7
Condenser x Liquid tube		14	140	10
Receiver x Liquid tube		5.4	55	48 in.·lbf
Expansion valve x Evaporator		5.4	55	48in.·lbf
Compressor x Engine		25	250	18
Compressor x Compressor bracket (1MZ–FE Only)		25	250	18
Drive belt adjusting bar bracket x Compressor		25	250	18
Drive belt adjusting bar bracket x Adjusting bar		18	185	13
Pivot bolt	5S–FE	52	520	38
	1MZ–FE	56	570	41
Adjusting lock bolt		18	185	13
Pressure switch x Liquied tube		10	100	7
Pressure plate x Compressor		13.2	135	9
Suction line (Piping joint)		32	330	24
Suction line (Block joint)		10	100	7

SFI SYSTEM

SF0D6–04

PRECAUTION

1. BEFORE WORKING ON FUEL SYSTEM, DISCONNECT NEGATIVE (–) TERMINAL CABLE FROM BATTERY

HINT:

Any diagnostic trouble code retained by the computer will be erased when the negative (–) terminal cable is removed from the battery.

Therefore, if necessary, read the diagnosis before removing the negative (–) terminal cable from the battery.

2. DO NOT SMOKE OR WORK NEAR AN OPEN FLAME WHEN WORKING ON THE FUEL SYSTEM

3. KEEP GASOLINE AWAY FROM RUBBER OR LEATHER PARTS

4. MAINTENANCE PRECAUTIONS

(a) In event of engine misfire, these precautions should be taken.
  (1) Check proper connection to battery terminals, etc.
  (2) After repair work, check that the ignition coil terminals and all other ignition system lines are reconnected securely.
  (3) When cleaning the engine compartment, be especially careful to protect the electrical system from water.

(b) Precautions when handling the oxygen sensor.
  (1) Do not allow oxygen sensor to drop or hit against an object.
  (2) Do not allow the sensor to come into contact with water.

5. IF VEHICLE IS EQUIPPED WITH MOBILE RADIO SYSTEM (HAM, CB, ETC.)

If the vehicle is equipped with a mobile communication system, refer to the precaution in the IN section.

6. AIR INDUCTION SYSTEM

(a) Separation of the engine oil dipstick, oil filler cap, PCV hose, etc. may cause the engine to run out of tune.

(b) Disconnection, looseness or cracks in the parts of the air induction system between the throttle body and cylinder head will allow air suction and cause the engine to run out of tune.

7. ELECTRONIC CONTROL SYSTEM

(a) Before removing SFI wiring connectors, terminals, etc., first disconnect the power by either turning the ignition switch OFF or disconnecting the negative (–) terminal cable from the battery.

HINT:

Always check the diagnostic trouble code before disconnecting the negative (–) terminal cable from the battery.

(b) When installing the battery, be especially careful not to incorrectly connect the positive (+) and negative (–) cables.
(c) Do not permit parts to receive a severe impact during removal or installation. Handle all SFI parts carefully, especially the ECM.
(d) Be careful during troubleshooting as there are numerous transistor circuit, and even slight terminal contact can cause further troubles.
(e) Do not open the ECM cover.
(f) When inspecting during rainy weather, take care to prevent entry of water. Also, when washing the engine compartment, prevent water from getting on the SFI parts and wiring connectors.
(g) Parts should be replaced as an assembly.
(h) Care should be taken when pulling out and inserting wiring connectors.
  (1) Release the lock and pull out the connector, pulling on the connectors.
  (2) Fully insert the connector and check that it is locked.

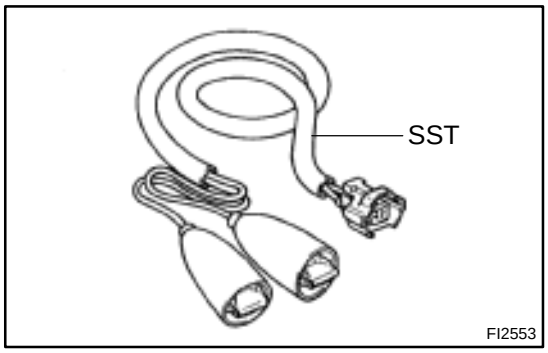

(i) Use SST for inspection or test of the injector or its wiring connector.
SST 09842–30070

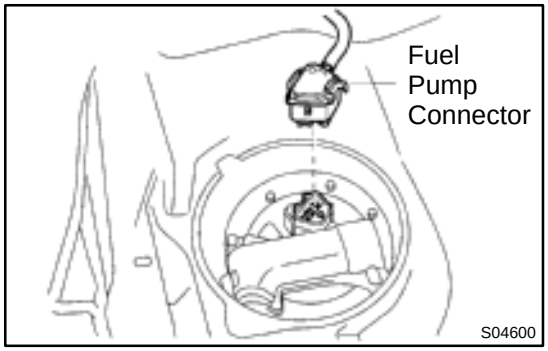

8. FUEL SYSTEM

(a) When disconnecting the high fuel pressure line, a large amount of gasoline will spill out, so observe these procedures:
  (1) Disconnect the fuel pump connector.
  (2) Start the engine. After the engine has stopped on its own, turn the ignition switch OFF.

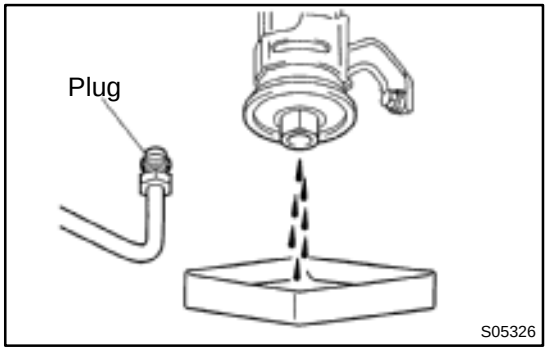

  (3) Put a container under the connection.
  (4) Slowly loosen the connection.
  (5) Disconnect the connection.
  (6) Plug the connection with a rubber plug.
  (7) Reconnect the fuel pump connector.

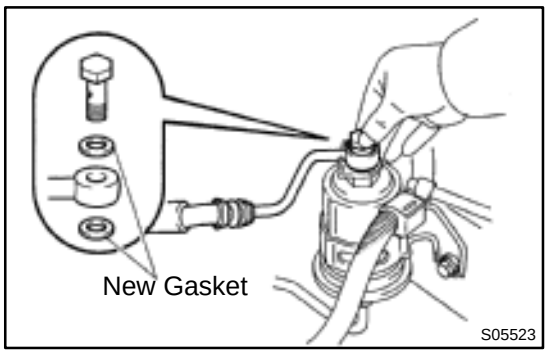

(b) When connecting the union bolt on the high pressure pipe union, observe these procedures:
(1) Always use 2 new gaskets.
(2) Tighten the union bolt by hand.
(3) Tighten the union bolt to the specified torque.
Torque: 29 N·m (300 kgf·cm, 21 ft·lbf)

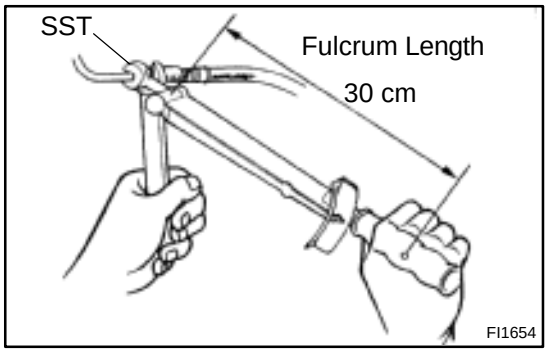

(c) When connecting the flare nut on the high pressure pipe union, observe these procedures:
(1) Apply a light coat of engine oil to the flare nut, and tighten the flare nut by hand.
(2) Using SST, tighten the flare nut to specified torque.
SST 09631–22020

NOTICE:
Do not rotate the fuel pipe, when tightening the flare nut.
Torque: 28 N·m (285 kgf·cm, 21 ft·lbf) for using SST
HINT:
Use a torque wrench with a fulcrum length of 30 cm (11.81 in.).

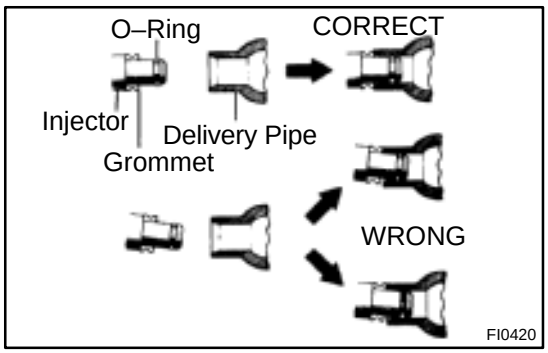

(d) Observe these precautions when removing and installing the injectors.
(1) Never reuse the O–ring.
(2) When placing a new O–ring on the injector, take care not to damage it in any way.
(3) Coat a new O–ring with spindle oil or gasoline before installing–never use engine, gear or brake oil.

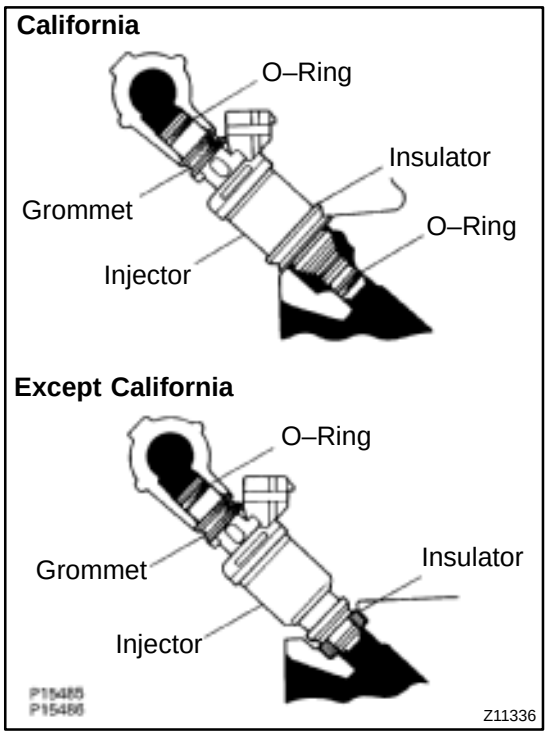

(e) Install the injector to the delivery pipe and cylinder head, as shown in the illustration.
Before installing the injector, must apply spindle oil or gasoline on the place where a delivery pipe or an intake manifold touches an O–ring of the injector.

(f) Observe these precautions when disconnecting the fuel tube connector (quick type):
(1) Check if there is any dirt like mud on the pipe and around the connector before disconnecting them and clean the dirt away.
(2) Be sure to disconnect with hands.

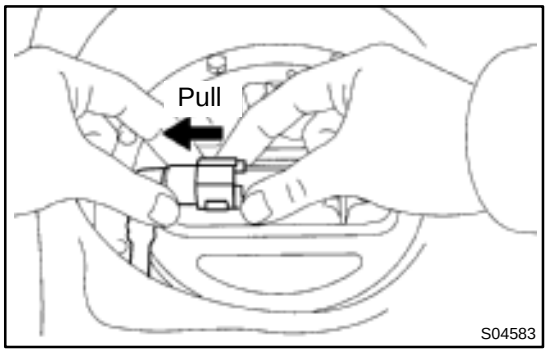

(3) When the connector and the pipe are stuck, pinch the retainer between the hands, push and pull the connector to free to disconnect and pull it out. Do not use any tool at this time.
(4) Inspect if there is any dirt or the likes on the seal surface of the disconnected pipe and clean it away.

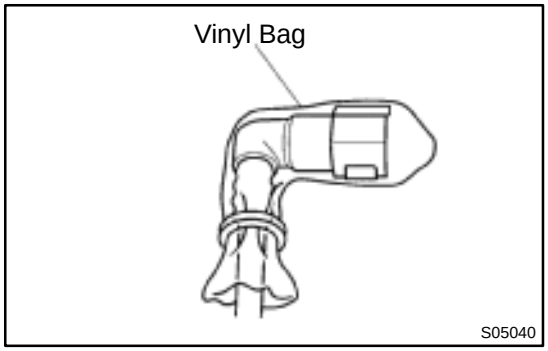

(5) Prevent the disconnected pipe and connector from damaging and mixing foreign objects by covering them with a vinyl bag.

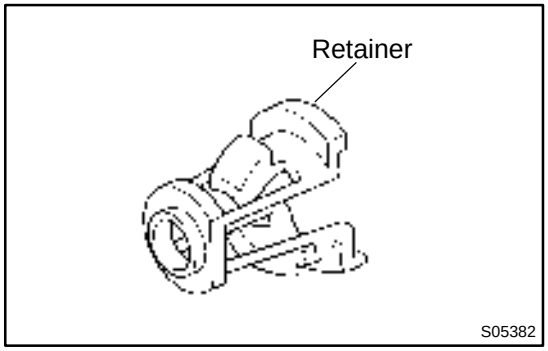

(g) Observe these precautions when connecting the fuel tube connector (quick type):
(1) Do not reuse the retainer removed from the pipe.
(2) Must use hands without using tools when to remove the retainer from the pipe.
(3) Check if there is any damage or foreign objects on the connected part of the pipe.

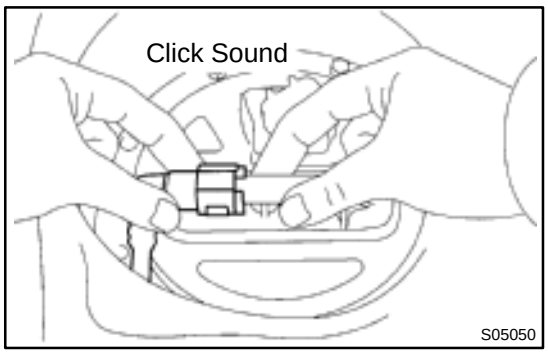

(4) Match the axis of the connector with axis of the pipe, and push in the connector until the retainer makes a ”click” sound. In case that the connections is tight, apply little amount of new engine oil on the tip of the pipe.
(5) After having finished the connection, check if the pipe and the connector are securely connected by pulling them.
(6) Check if there is any fuel leakage.

(h) Observe these precautions when handling nylon tube.
(1) Pay attention not to turn the connected part of the nylon tube and the quick connector with force when connecting them.
(2) Pay attention not to kink the nylon tube.
(3) Do not remove the EPDM protector on the outside of the nylon tube.
(4) Must not close the piping with the nylon tube by bending it.

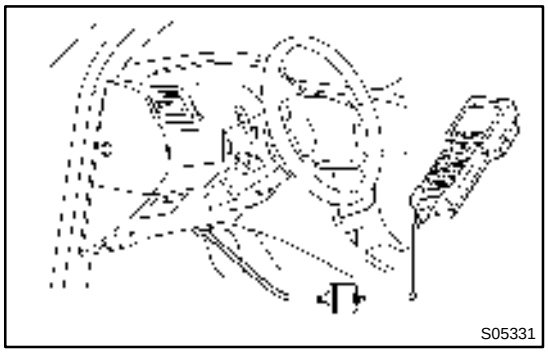

(i) Check that there are no fuel leaks after doing maintenance anywhere on the fuel system.
(1) Connect a TOYOTA hand–held tester to the DLC3.
(2) Turn the ignition switch ON and push the TOYOTA hand–held tester main switch ON.

NOTICE:
Do not start the engine.

(3) Select the active test mode on the TOYOTA hand–held tester.
(4) Please refer to the TOYOTA hand–held tester operator’s manual for further details.
(5) If you have no TOYOTA hand–held tester, connect the positive (+) and negative (–) leads from the battery to the fuel pump connector.
(See page SF–6)
(6) Check that there are no leaks from any part of the fuel system.
(7) Turn the ignition switch OFF.
(8) Disconnect the TOYOTA hand–held tester from the DLC3.

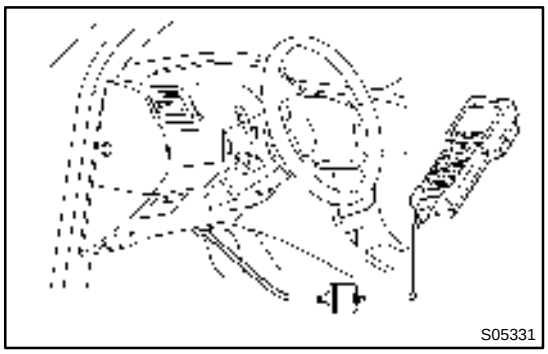
S05331

FUEL PUMP

SF0D7–03

ON–VEHICLE INSPECTION

1. CHECK FUEL PUMP OPERATION

(a) Connect a TOYOTA hand–held tester to the DLC3.

(b) Turn the ignition switch ON and push the TOYOTA hand–held tester main switch ON.

NOTICE:

Do not start the engine.

(c) Select the ACTIVE TEST mode on the TOYOTA hand–held tester.

(d) Please refer to the TOYOTA hand–held tester operator's manual for further details.

(e) If you have no TOYOTA hand–held tester, connect the positive (+) and negative (–) leads from the battery to the fuel pump connector. (See step 7)

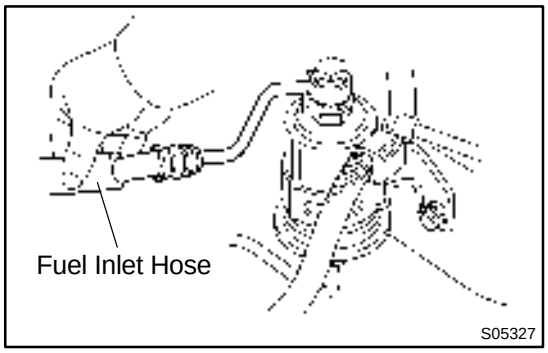

S05327

(f) Check that there is pressure in the fuel inlet hose from the fuel filter.

HINT:

If there is fuel pressure, you will hear the sound of fuel flowing. If there is no pressure, check the fusible link, fuses, EFI main relay, fuel pump, ECM and wiring connections.

(g) Turn the ignition switch OFF.

(h) Disconnect the TOYOTA hand–held tester from the DLC3.

2. CHECK FUEL PRESSURE

(a) Check the battery positive voltage is above 12 V.

(b) Disconnect the negative (–) terminal cable from the battery.

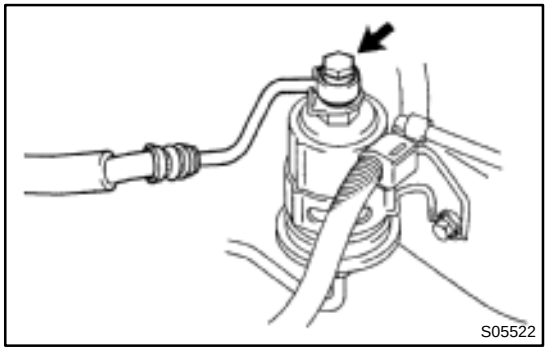
S05522

(c) Remove the union bolt and 2 gaskets, and disconnect the fuel inlet hose from the fuel filter outlet.

CAUTION:

- **Put a shop towel under the fuel filter.**
- **Slowly loosen the union bolt.**

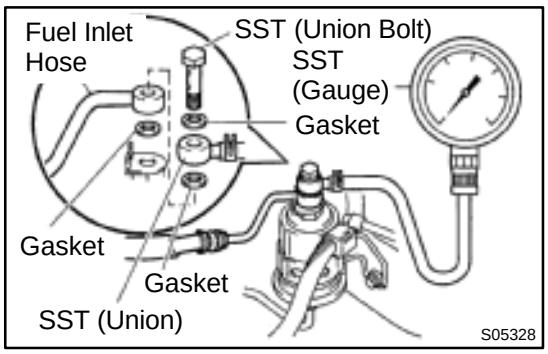

(d) Install the fuel inlet hose and SST (pressure gauge) to the fuel filter outlet with the 3 gaskets and SST (union bolt).
SST 09268–45014 (09268–41190, 90405–06167)
Torque: 29 N·m (300 kgf·cm, 21 ft·lbf)
(e) Wipe off any splattered gasoline.
(f) Reconnect the negative (–) terminal cable to the battery.
(g) Connect a TOYOTA hand–held tester to the DLC3.
(See step 1 in check fuel pump operation (a) to (e))
(h) Measure the fuel pressure.
Fuel pressure:
301 – 347 kPa (3.1 – 3.5 kgf/cm^2, 44 – 50 psi)

If pressure is high, replace the fuel pressure regulator.
If pressure is low, check the fuel hoses, fuel hose connections, fuel pump, fuel filter and fuel pressure regulator.

(i) Disconnect the TOYOTA hand–held tester from the DLC3.
(j) Start the engine.
(k) Measure the fuel pressure at idle.
Fuel pressure:
301 – 347 kPa (3.1 – 3.5 kgf/cm^2, 44 – 50 psi)
(l) Stop the engine.
(m) Check that the fuel pressure remains as specified for 5 minutes after the engine has stopped.
Fuel pressure:
147 kPa (1.5 kgf/cm^2, 21 psi) or more

If pressure is not as specified, check the fuel pump, pressure regulator and/or injectors.

(n) After checking fuel pressure, disconnect the negative (–) terminal cable from the battery and carefully remove the SST to prevent gasoline from splashing.
SST 09268–45014
(o) Reconnect the fuel inlet hose with 2 new gaskets and the union bolt.
Torque: 29 N·m (300 kgf·cm, 21 ft·lbf)
(p) Reconnect the negative (–) terminal cable to the battery.
(q) Check for fuel leaks. (See page SF–1)

3. REMOVE REAR SEAT CUSHION
4. REMOVE FLOOR SERVICE HOLE COVER
5. DISCONNECT FUEL PUMP & SENDER GAUGE CONNECTOR
6. INSPECT FUEL PUMP RESISTANCE

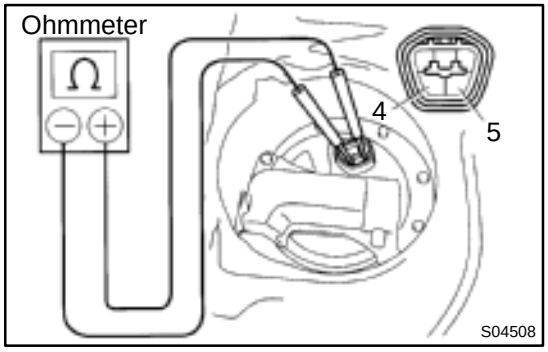

Using an ohmmeter, measure the resistance between terminals 4 and 5.
Resistance: 0.2 – 3.0 Ω at 20˚C (68˚F)
If the resistance is not as specified, replace the fuel pump.

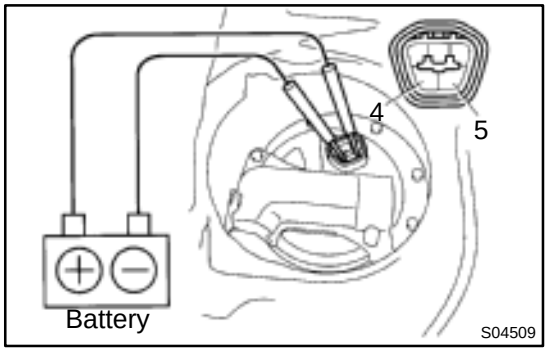

7. INSPECT FUEL PUMP OPERATION

Connect the positive (+) lead from the battery to terminal 4 of the connector, and the negative (–) lead to terminal 5. Check that the fuel pump operates.

NOTICE:

- **These tests must be done quickly (within 10 seconds) to prevent the coil burning out.**
- **Keep the fuel pump as far away from the battery as possible.**
- **Always do the switching at the battery side.**

If operation is not as specified, replace the fuel pump or lead wire.

8. RECONNECT FUEL PUMP & SENDER GAUGE CONNECTOR

9. REINSTALL FLOOR SERVICE HOLE COVER

10. REINSTALL REAR SEAT CUSHION

SF0D8–02

COMPONENTS

Type A

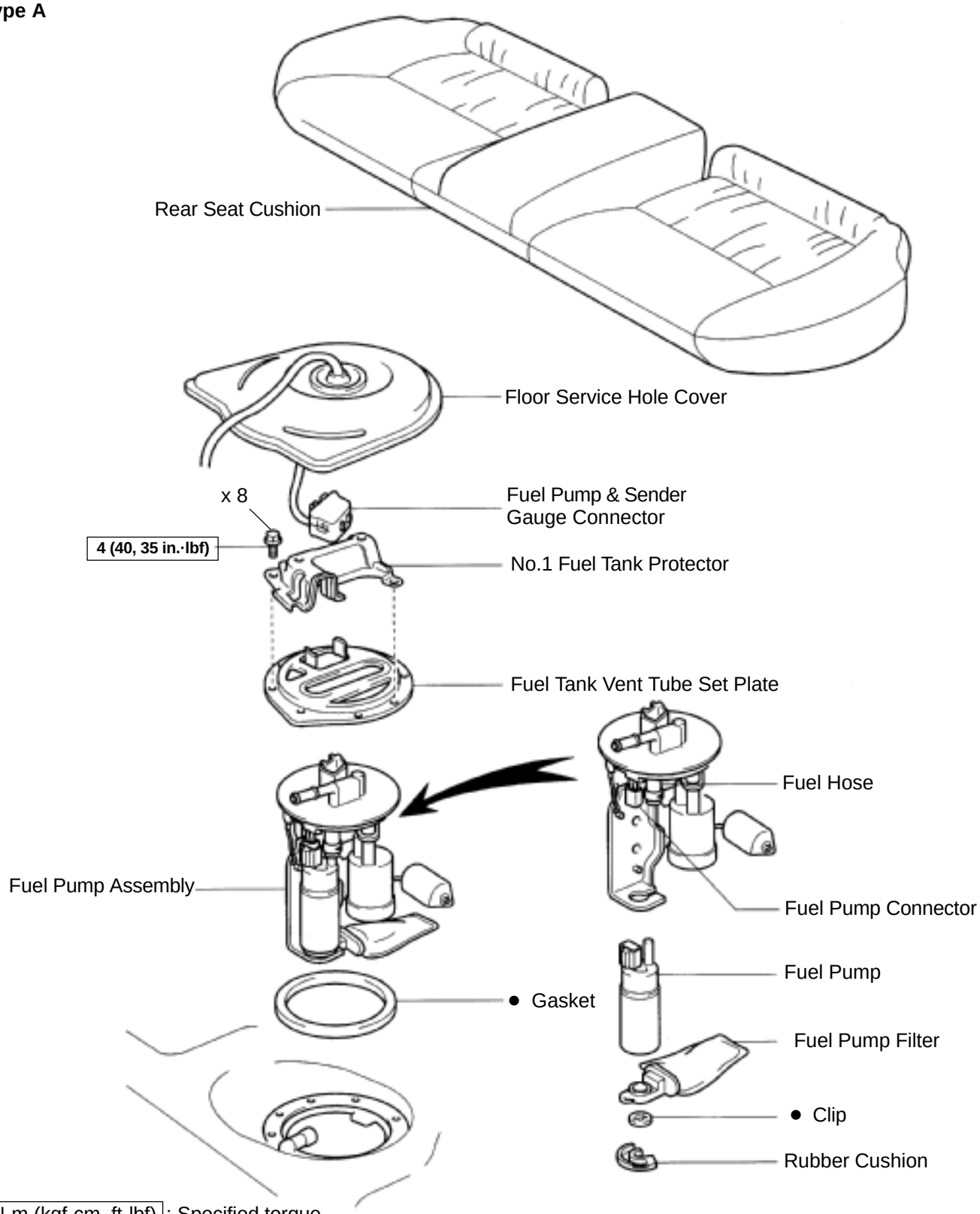

N·m (kgf·cm, ft·lbf) : Specified torque

● Non–reusable part

Z19025

Type B

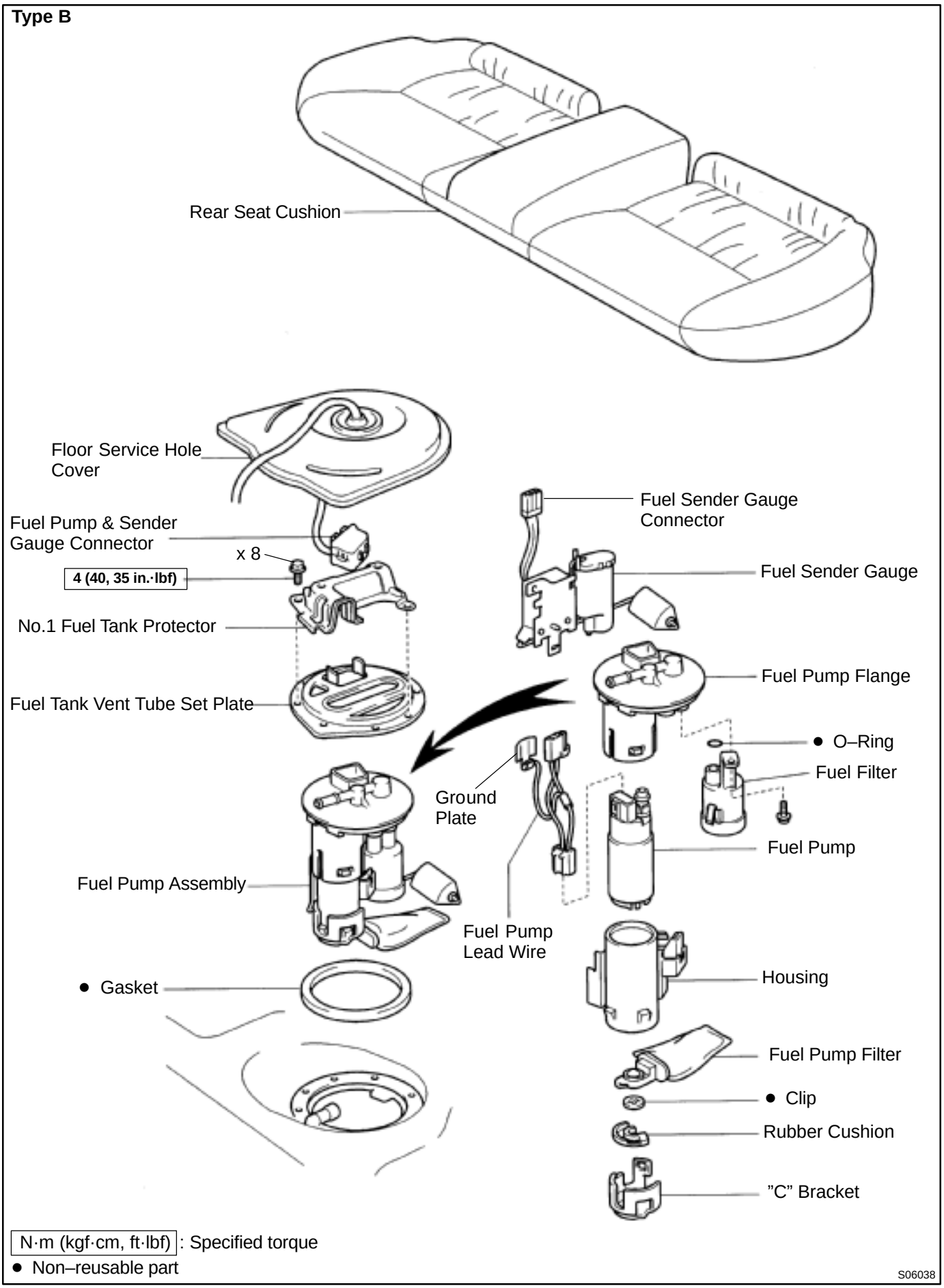

N·m (kgf·cm, ft·lbf) : Specified torque

● Non–reusable part

S06038

SF0D9–03

REMOVAL

CAUTION:

Do not smoke or work near an open flame when working on the fuel pump.

1. REMOVE REAR SEAT CUSHION

2. REMOVE FLOOR SERVICE HOLE COVER

(a) Take out the floor carpet.

(b) Remove the service hole cover.

HINT:

At the time of installation, please refer to the following items. Check for fuel leakage.

3. DISCONNECT FUEL PUMP & SENDER GAUGE CONNECTOR

4. REMOVE NO.1 FUEL TANK PROTECTOR

Remove the 2 bolts and No.1 fuel tank protector.

Torque: 4 N·m (40 kgf·cm, 35 in.·lbf)

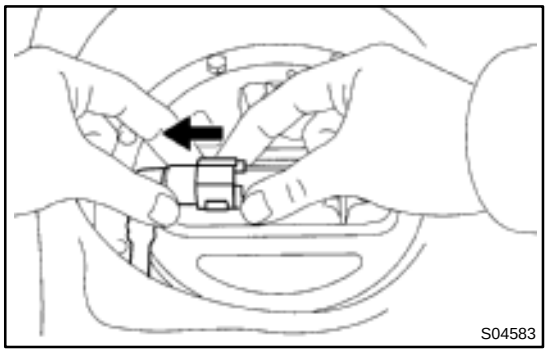

5. DISCONNECT FUEL TUBE (FUEL TUBE CONNECTOR)

CAUTION:

- **Perform disconnecting and connecting operations of the fuel tube connector (quick type) after observing the precautions.**
- **As there is retained pressure in the fuel pipe line, prevent it from splashing inside the vehicle compartment.**

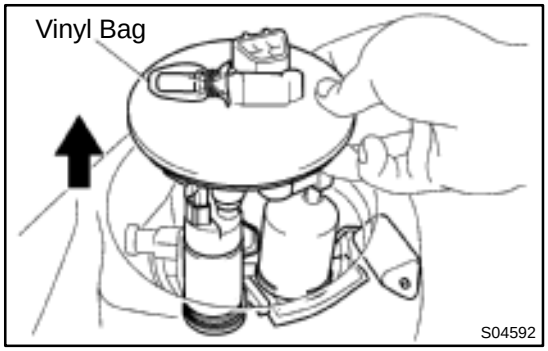

6. REMOVE FUEL PUMP ASSEMBLY FROM FUEL TANK

(a) Remove the 6 bolts and fuel tank vent tube set plate.
Torque: 4 N·m (40 kgf·cm, 35 in.·lbf)

(b) Pull out the fuel pump assembly.

(c) Remove the gasket from the pump assembly.

NOTICE:

- **Do not damage the fuel pump filter.**
- **Be careful that the arm of the sender gauge should not bent.**

HINT:

At the time of installation, please refer to the following items. Install a new gasket to the pump assembly.

SF0DA–02

DISASSEMBLY

1. DISCONNECT FUEL PUMP CONNECTOR

2. Type B:
DISCONNECT GROUND PLATE

3. Type B:
DISCONNECT FUEL SENDER GAUGE CONNECTOR

Type B

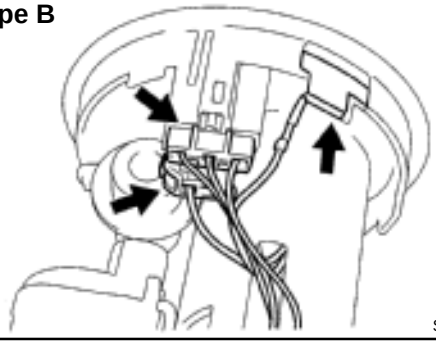

S06028

Type A

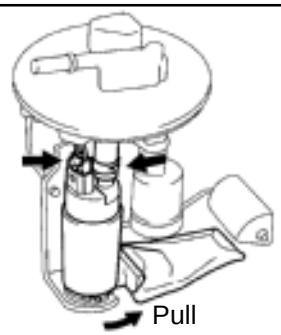

S04603

4. Type A:
REMOVE FUEL PUMP FROM FUEL PUMP BRACKET

(a) Pull off the lower side of the fuel pump from the pump bracket.

(b) Disconnect the fuel hose from the fuel pump, and remove the fuel pump.

(c) Remove the rubber cushion from the fuel pump.

Type B

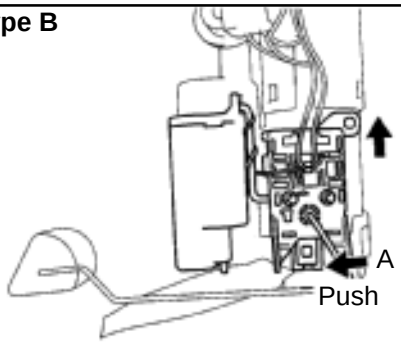

S06033

5. Type B:
REMOVE FUEL SENDER GAUGE.

Push down the portion of A with a finger, and push up the sender gauge.

NOTICE:

Be careful that the arm of the sender gauge should not bent.

Type B

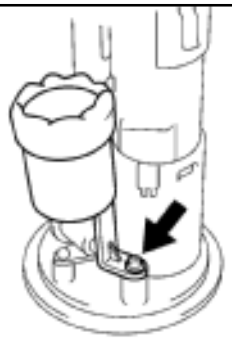

S06050

6. Type B:
REMOVE FUEL FILTER

(a) Remove the screw, and pull out the fuel filter.

(b) Remove the O–ring from the fuel filter.

HINT:

At the time of installation, please refer to the following items. Apply a light coat of gasoline to a new O–ring, and install it to the fuel filter.

Torque: 2.0 N·m (20 kgf·cm, 17 in.·lbf)

Type B

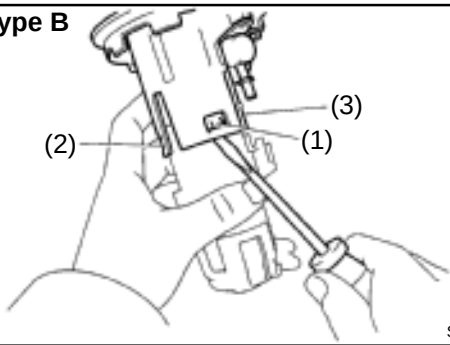

S06030

7. Type B:
REMOVE FUEL PUMP FLANGE

Using a screwdriver, remove the snap fit portion in the order of 1, 2 and 3 as shown in the illustration.

HINT:

At the time of installation, please refer to the following items. Apply a light coat of gasoline to a new O–ring of the fuel pump.

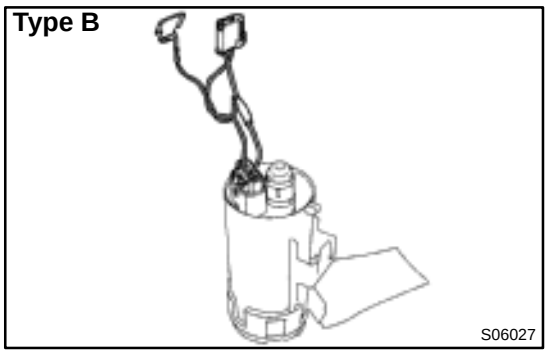

8. Type B:
REMOVE FUEL PUMP LEAD WIRE.

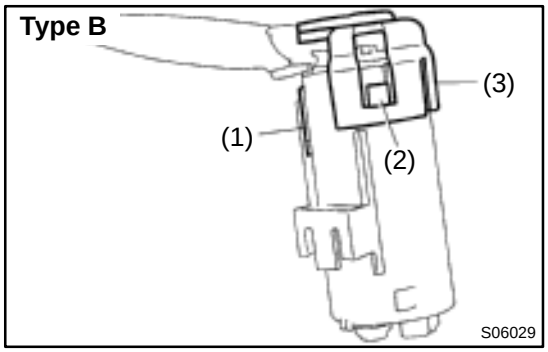

9. Type B:
REMOVE ”C” BRACKET, RUBBER CUSHION AND FUEL PUMP

Using a screwdriver, remove the snap fit portion in the order of 1, 2 and 3 as shown in the illustration.

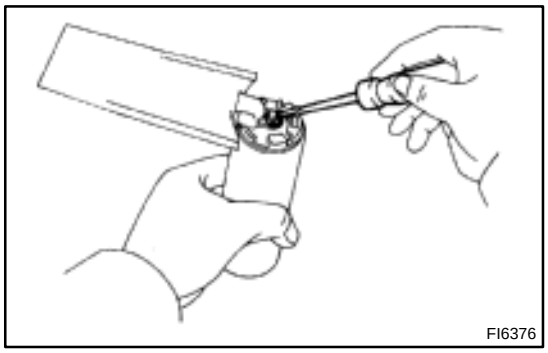

10. REMOVE FUEL PUMP FILTER FROM FUEL PUMP

(a) Using a small screwdriver, remove the clip.

(b) Pull out the pump filter.

HINT:

At the time of installation, please refer to the following items. Install the pump filter with a new clip.

SF0DB–01

REASSEMBLY

Reassembly is in the reverse order of disassembly. (See page SF–12)

SF0DC–01

INSTALLATION

Installation is in the reverse order of removal. (See page SF–11)

FUEL PRESSURE REGULATOR

SF0DD–02

COMPONENTS

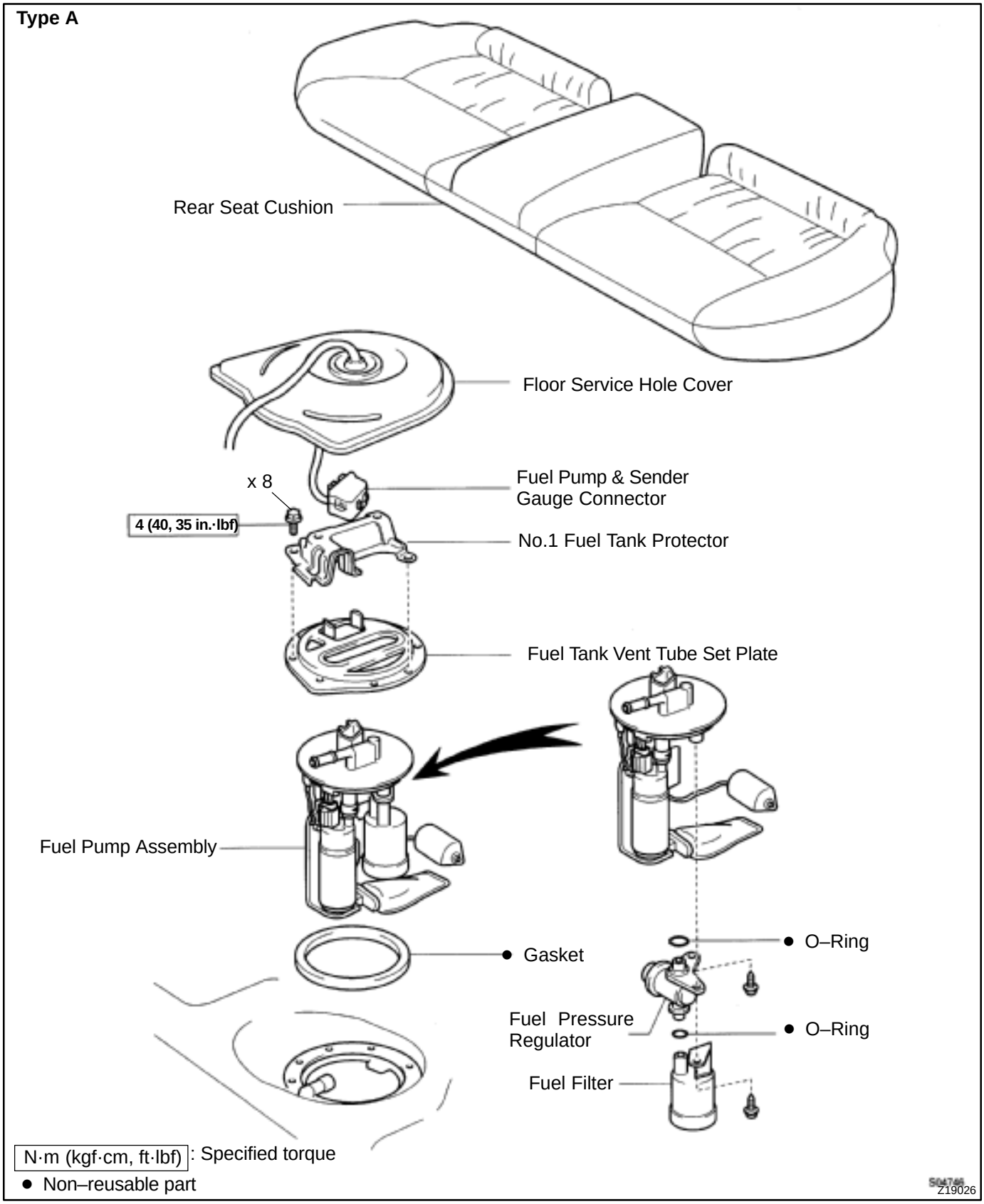

Type B

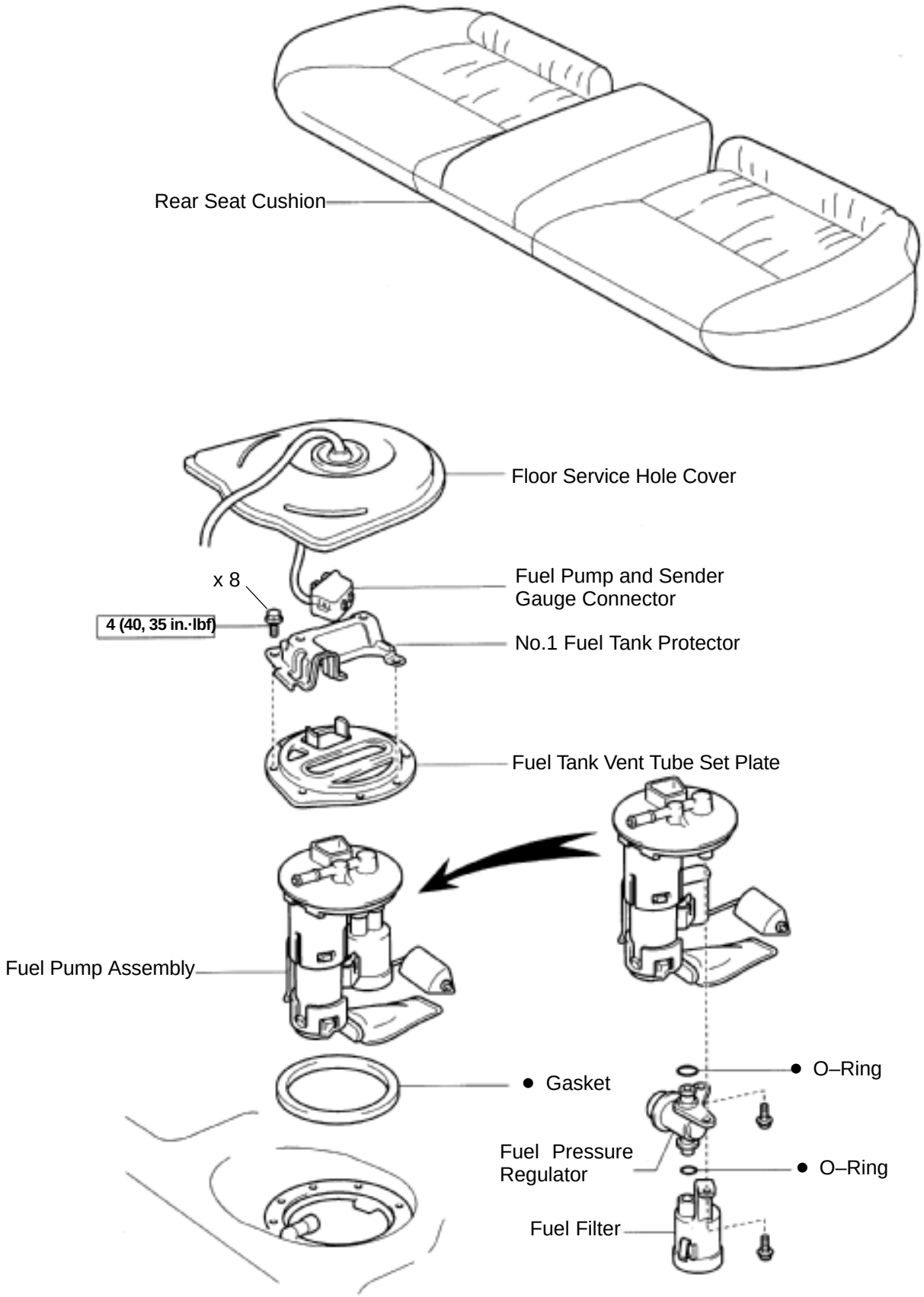

N·m (kgf·cm, ft·lbf) : Specified torque

● Non–reusable part

S06037

SF0DE–03

REMOVAL

1. REMOVE FUEL PUMP ASSEMBLY FROM FUEL TANK
(See page SF–11)

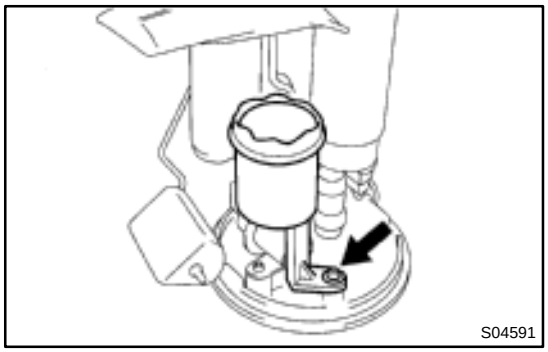

2. REMOVE FUEL FILTER

(a) Remove the screw, and pull out the fuel filter.

(b) Remove the O–ring from the fuel filter.

HINT:

At the time of installation, please refer to the following items. Apply a light coat of gasoline to a new O–ring, and install it to the fuel filter.

Torque: 2.0 N·m (20 kgf·cm, 17 in.·lbf)

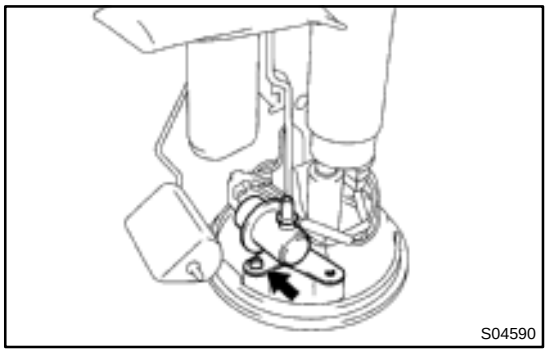

3. REMOVE FUEL PRESSURE REGULATOR

(a) Remove the screw, and pull out the pressure regulator.

Torque: 2.0 N·m (20 kgf·cm, 17 in.·lbf)

(b) Remove the O–ring from the pressure regulator.

HINT:

At the time of installation, please refer to the following items. Apply a light coat of gasoline to a new O–ring, and install it to the pressure regulator.

SF0DF–01

INSTALLATION

Installation is in the reverse order of removal. (See page SF–18)

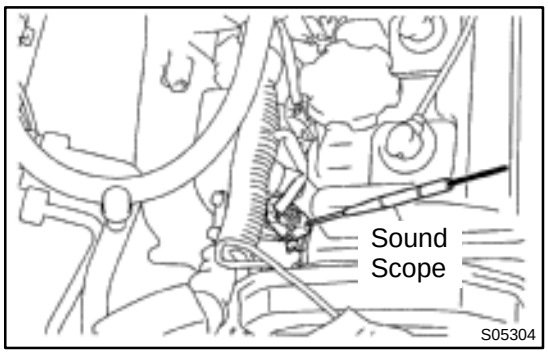

INJECTOR

SF0DG–03

ON–VEHICLE INSPECTION

1. INSPECT INJECTOR OPERATION

Check operation sound from each injector.

(a) With the engine running or cranking, use a sound scope to check that there is a normal operating noise in proportion to engine speed.

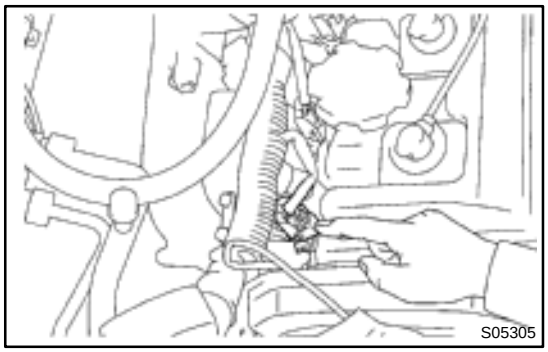

(b) If you have no sound scope, you can check the injector transmission operation with your finger.

If no sound or unusual sound is heard, check the wiring connector, injector or injection signal from the ECM.

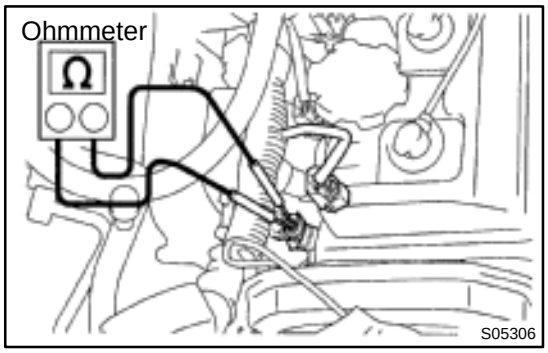

2. INSPECT INJECTOR RESISTANCE

(a) Disconnect the injector connector.

(b) Using an ohmmeter, measure the resistance between the terminals.

Resistance: 13.4 – 14.2 Ω at 20˚C (68˚F)

If the resistance is not as specified, replace the injector.

(c) Reconnect the injector connector.

SF0DH–03

COMPONENTS

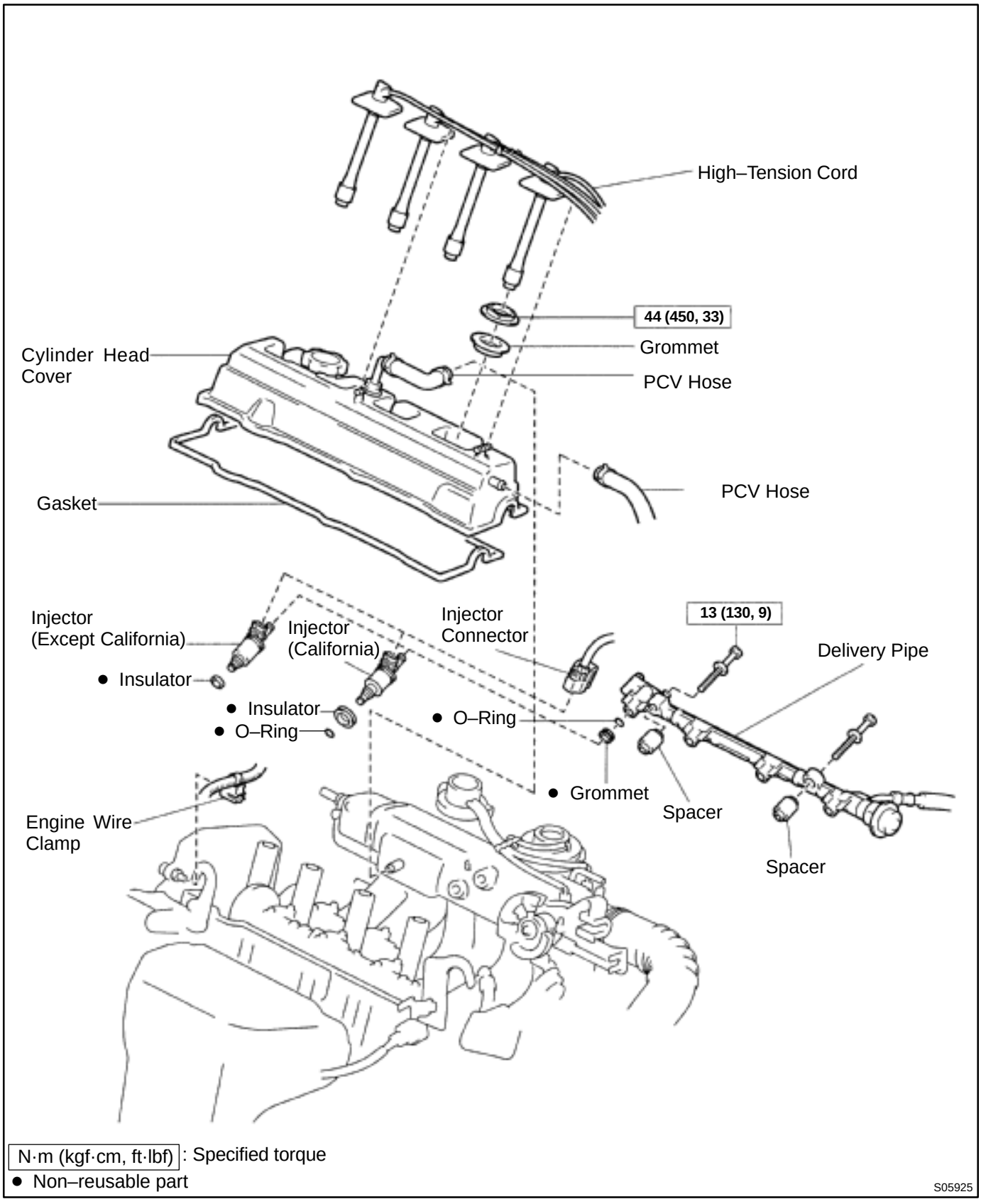

N·m (kgf·cm, ft·lbf) : Specified torque
● Non–reusable part

S05925

SF0DI–03

REMOVAL

1. REMOVE CYLINDER HEAD COVER

(a) Disconnect the 4 high–tension cords from the clamps on the cylinder head cover.

(b) Disconnect the 4 high–tension cords from the spark plugs.

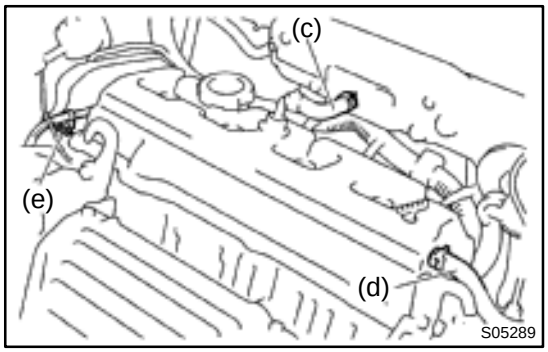

(c) Disconnect the PCV hose from the intake manifold.

(d) Disconnect the PCV hose from the cylinder head cover.

(e) Disconnect the engine wire clamp from the mounting bolt of the No.2 timing belt cover.

(f) Remove the cylinder head cover. (See page EM–33)

NOTICE:

Cover the cylinder head with a clean cloth to prevent dirt, etc. getting into the cylinder head.

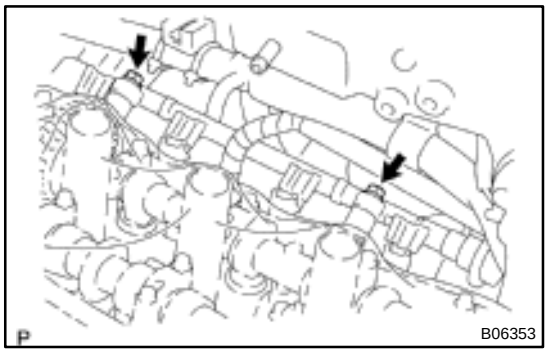

2. REMOVE DELIVERY PIPE AND INJECTORS

(a) Disconnect the 4 injector connectors.

(b) Remove the 2 bolts holding the delivery pipe to the cylinder head.

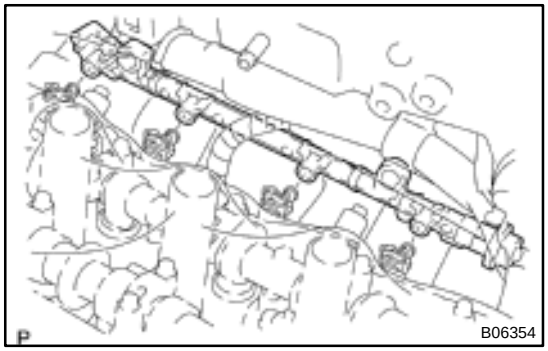

(c) Disconnect the delivery pipe from the 4 injectors.

(d) Pull out the 4 injectors.

NOTICE:

Be careful not to drop the injectors.

(e) Remove the 4 insulators (Except California) and 2 spacers from the cylinder head.

(f) California:
Remove the 2 O–rings, insulator and grommet from each injector.

(g) Except California:
Remove the O–ring and grommet from each injector.

SF0DJ–03

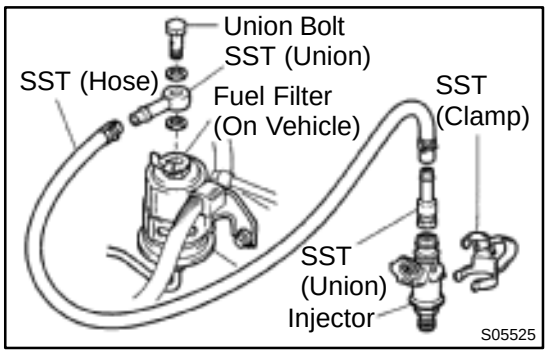

INSPECTION

1. INSPECT INJECTOR INJECTION

CAUTION:

Keep injector clean of sparks during the test.

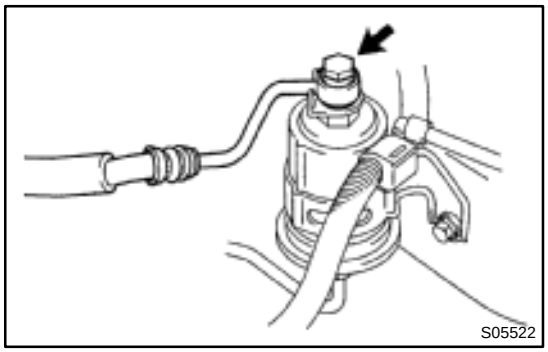

(a) Remove the union bolt and 2 gaskets, and disconnect the fuel inlet hose from the fuel filter outlet.

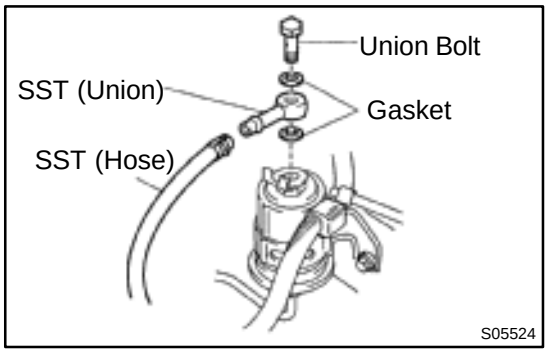

(b) Connect SST (union and hose) to the fuel filter outlet with the 2 gaskets and union bolts.
SST 09268–41047 (90405–09015)
Torque: 29 N·m (300 kgf·cm, 21 ft·lbf)

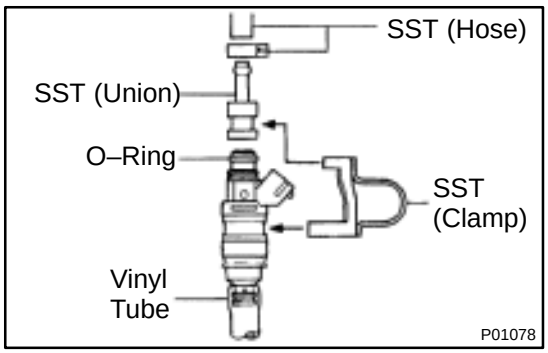

(c) Install the grommet and O–ring to the injector.
(d) Connect SST (union and hose) to the injector, and hold the injector and union with SST (clamp).
SST 09268–41047 (09268–41100, 09268–41110)
(e) Put the injector into the graduated cylinder.

CAUTION:

Install a suitable vinyl hose onto the injector to prevent gasoline from splashing out.

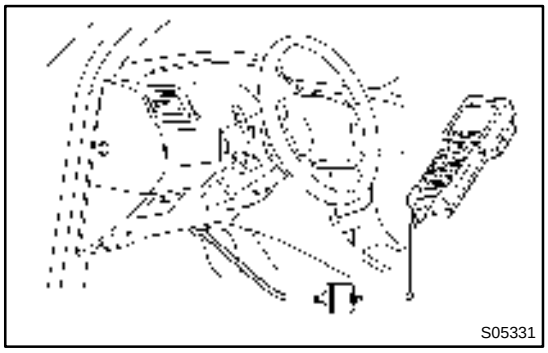

(f) Connect a TOYOTA hand–held tester to the DLC3.
(g) Connect the battery negative (–) cable to the battery.
(h) Turn the ignition switch ON and push the TOYOTA hand–held tester main switch ON.

NOTICE:

Do not start the engine.

(i) Select the ACTIVE TEST mode on the TOYOTA hand–held tester.
(j) Please refer to the TOYOTA hand–held tester operator's manual for further details.

(k) If you have no TOYOTA hand–held tester, connect the positive (+) and negative (–) leads from the battery to the fuel pump connector. (See page SF–6)

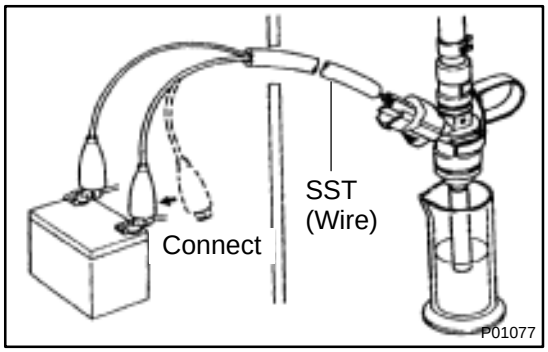

(l) Connect SST (wire) to the injector and battery for 15 seconds, and measure the injection volume with a graduated cylinder. Test each injector 2 or 3 times.
SST 09842–30070
Volume: 51 – 63 cm^3 (3.2 – 3.8 cu in.) per 15 seconds
Difference between each injector:
12 cm^3 (0.7 cu in.) or less

If the injection volume is not as specified, replace the injector.

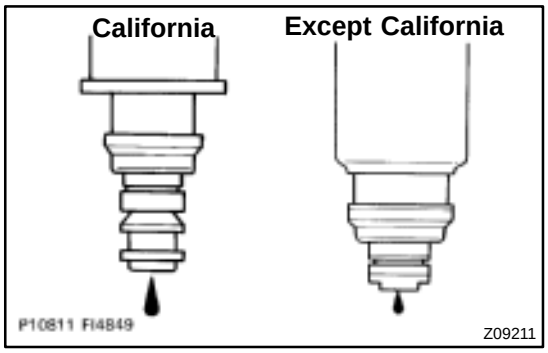

2. INSPECT LEAKAGE

(a) In the condition above, disconnect the tester probes of SST (wire) from the battery and check the fuel leakage from the injector.
SST 09842–30070
Fuel drop: 1 drop or less per 3 minutes

(b) Turn the ignition switch OFF.

(c) Disconnect the negative (–) terminal cable from the battery.

(d) Remove the SST.
SST 09268–41047, 09842–30070

(e) Disconnect the TOYOTA hand–held tester from the DLC3.

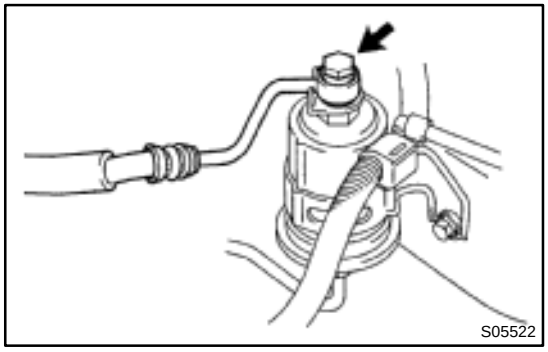

(f) Reconnect the fuel inlet hose to the fuel filter outlet with 2 new gaskets and the union bolt.
Torque: 29 N·m (300 kgf·cm, 22 ft·lbf)

SF0Z8–01

INSTALLATION

1. INSTALL INJECTORS AND DELIVERY PIPE

(a) California:
Install new insulator and grommet to each injector.

(b) Except California:
Install a new grommet to each injector.

(c) California:
Apply a light coat of gasoline onto 2 new O–rings, and install them to each injector.

(d) Except California:
Apply a light coat of gasoline onto a new O–ring, and install it to each injector.

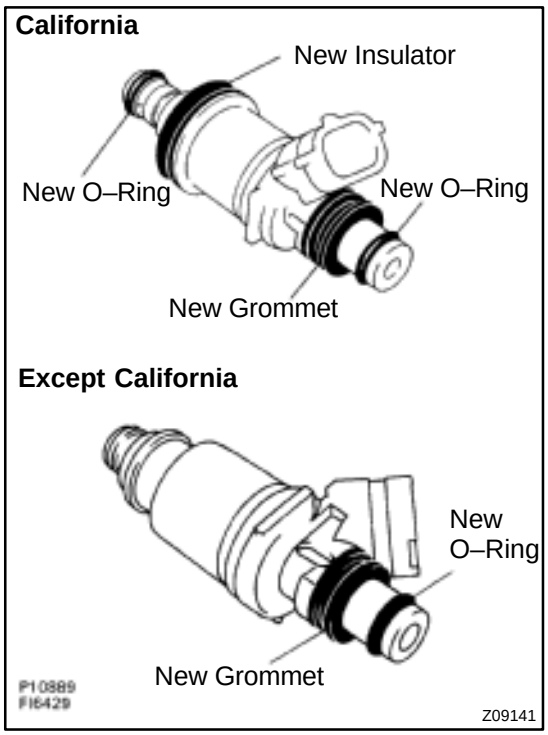

(e) Install the 2 spacers and 4 new insulators to the cylinder head.

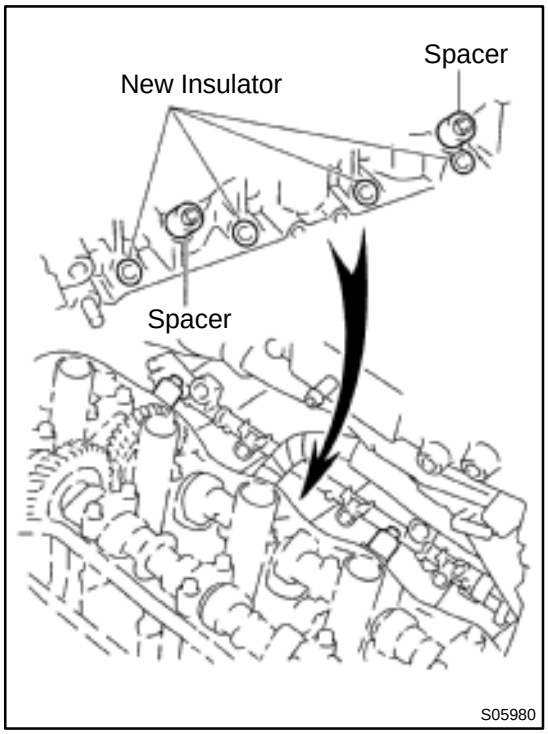

(f) While turning the injector left and right, install it to the delivery pipe. Install the 4 injectors.

(g) Position the injector connector upward.

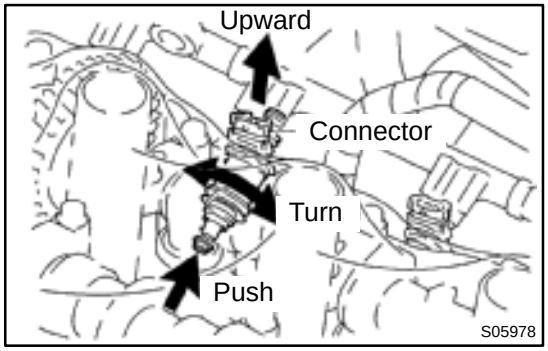

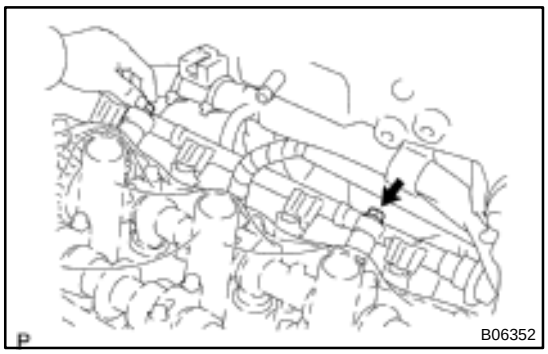

(h) Attach the 4 injectors and delivery pipe assembly to the cylinder head.
(i) Temporarily install the 2 bolts holding the delivery pipe to the cylinder head.

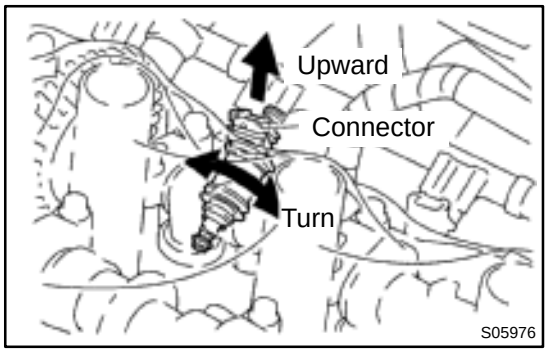

(j) Check that the injectors rotate smoothly.
HINT:
If injectors do not rotate smoothly, the probable cause is incorrect installation of O–rings. Replace the O–rings.
(k) Position the injector connector upward.
(l) Tighten the 2 bolts holding the delivery pipe to the cylinder head.
Torque: 13 N·m (130 kgf·cm, 9 ft·lbf)

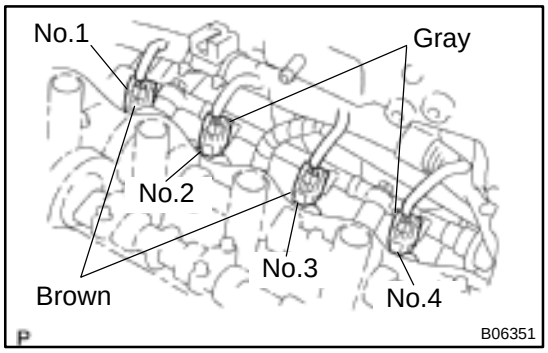

(m) Connect the 4 injector connectors.
HINT:
The No.1 and No.3 injector connectors are brown, and the No.2 and No.4 injector connectors are gray.

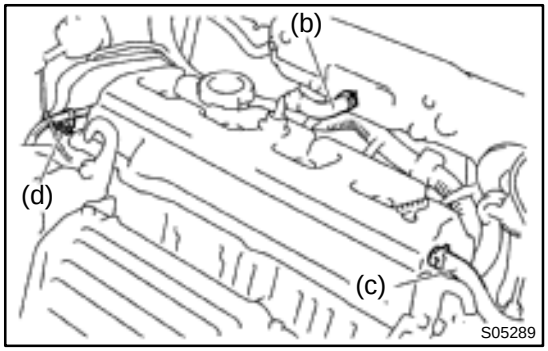

2. INSTALL CYLINDER HEAD COVER
(a) Install the cylinder head cover. (See page EM–53)
(b) Connect the PCV hose to the intake manifold.
(c) Connect the PCV hose to the cylinder head cover.
(d) Install the engine wire clamp to the mounting bolt of the No.2 timing belt cover.
(e) Connect the 4 high–tension cords to the spark plugs.
(f) Install the 4 high–tension cords to the clamps on the cylinder head cover.
3. CHECK FOR FUEL LEAKS (See page SF–1)

FUEL TANK AND LINE

SF0DL–03

COMPONENTS

CAUTION:

Always use new gaskets when replacing the fuel tank or component parts.

Apply the proper torque to all parts tightened

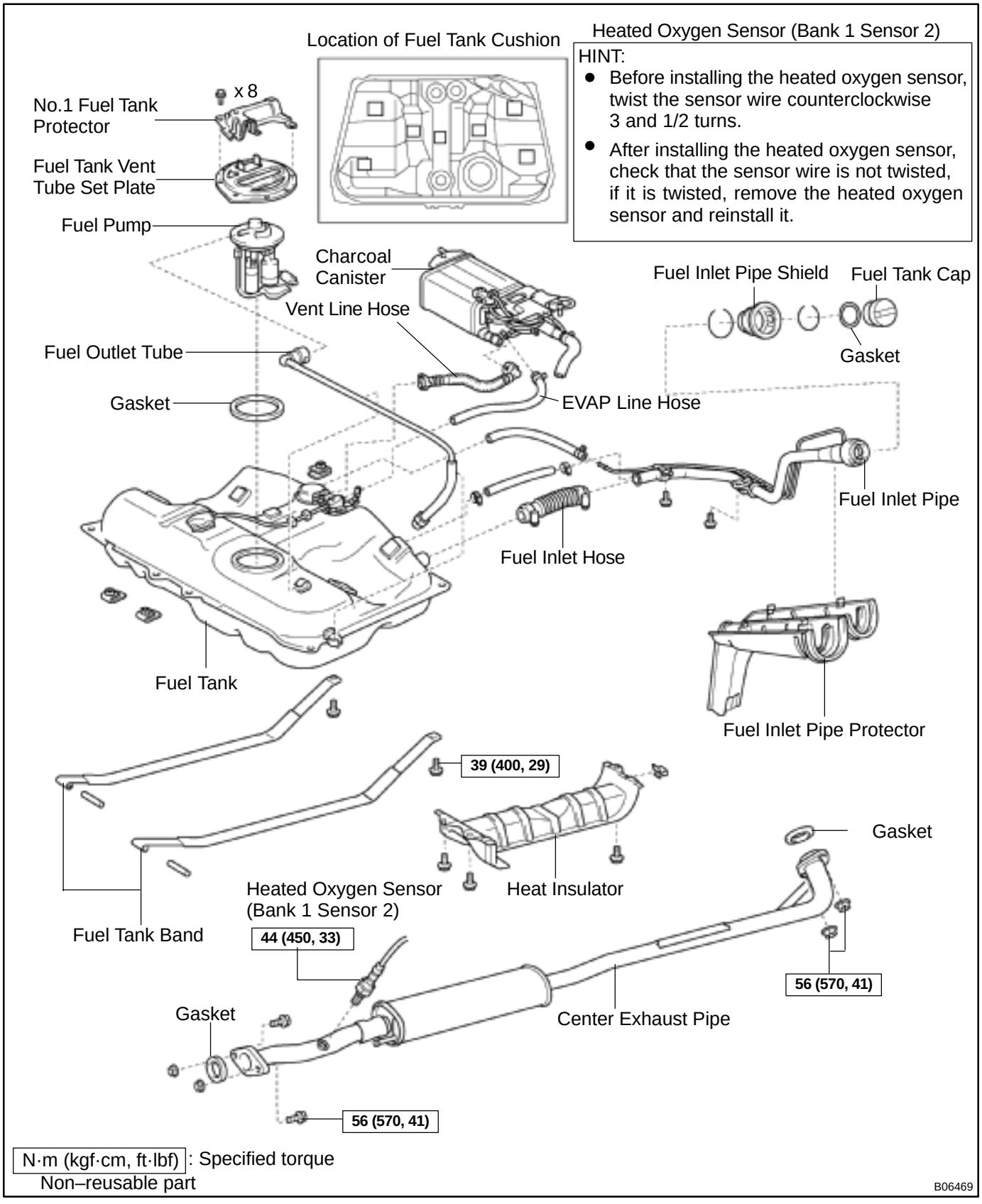

SF0DM–03

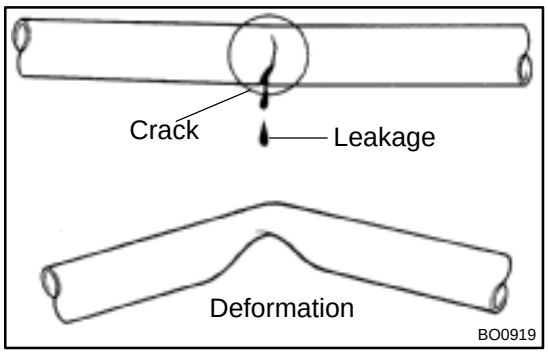

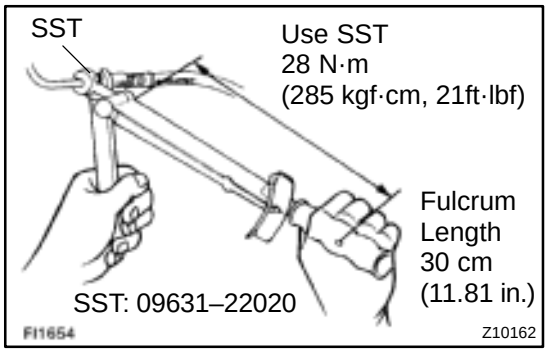

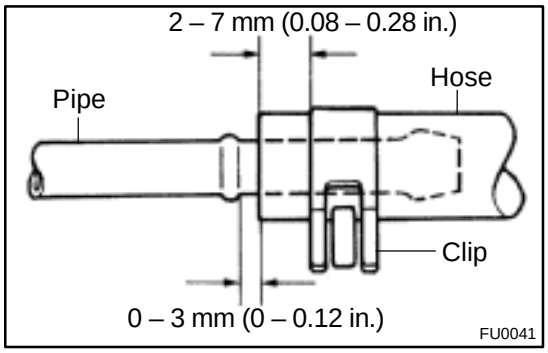

INSPECTION

INSPECT FUEL TANK AND LINE

(a) Check the fuel lines for cracks or leakage, and all connections for deformation.

(b) Check the fuel tank vapor vent system hoses and connections for looseness, sharp bends or damage.

(c) Check the fuel tank for deformation, cracks, fuel leakage or tank band looseness.

(d) Check the filler neck for damage or fuel leakage.

(e) Hose and pipe connections are as shown in the illustration.

If a problem is found, repair or replace the parts as necessary.

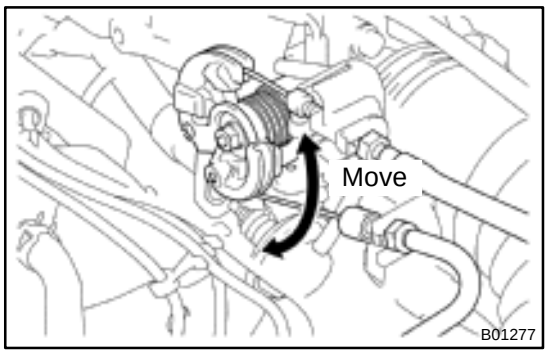

THROTTLE BODY

SF0DN–03

ON–VEHICLE INSPECTION

1. INSPECT THROTTLE BODY

(a) Check that the throttle linkage moves smoothly.

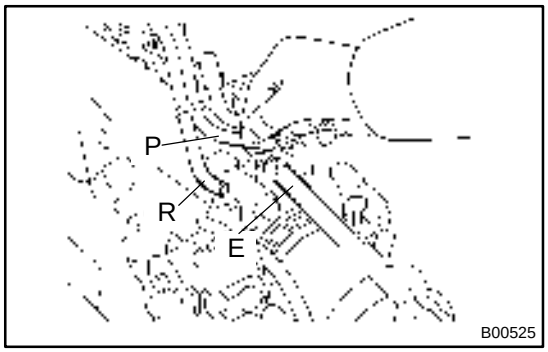

(b) Check the vacuum at each port.

- Start the engine.
- Check the vacuum with your finger.

Port name	At idle	Other than idle
Mark E	Vacuum	Vacuum
Mark P	No vacuum	Vacuum
Mark R	No vacuum	No vacuum

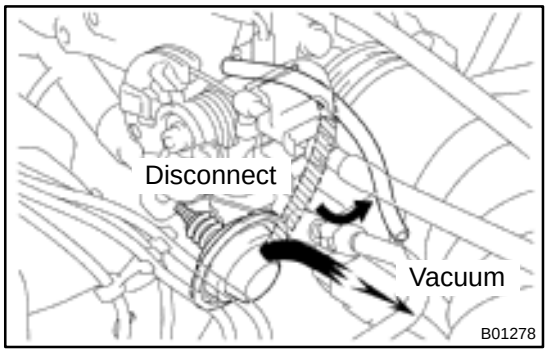

2. INSPECT THROTTLE POSITION SENSOR

(a) Disconnect the sensor connector.

(b) Disconnect the vacuum hose from the throttle opener.

(c) Apply vacuum to the throttle opener.

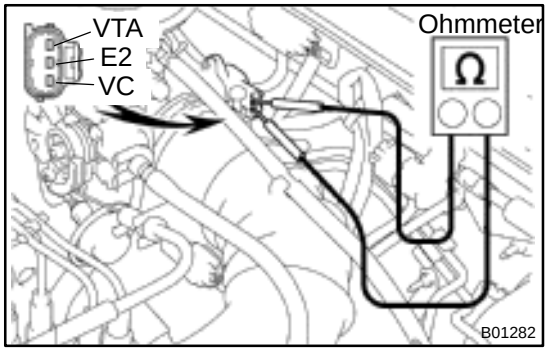

(d) Using an ohmmeter, measure the resistance between each terminal.

Clearance between lever and stop screw	Between terminals	Resistance
0 mm (0 in.)	VTA – E2	0.2 – 5.7 kΩ
Throttle valve fully open	VTA – E2	2.0 – 10.2 kΩ
–	VC – E2	2.5 – 5.9 kΩ

(e) Reconnect the vacuum hose to the throttle opener.

(f) Reconnect the sensor connector.

3. INSPECT THROTTLE OPENER

(a) Allow the engine to warm up to normal operating temperature.

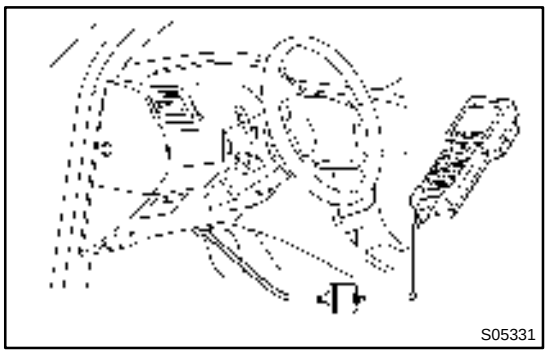

(b) Connect a TOYOTA hand–held tester or OBDII scan tool.
(1) Remove the fuse cover on the instrument panel.
(2) Connect a TOYOTA hand–held tester or OBDII scan tool to the DLC3.
(3) Please refer to the TOYOTA hand–held tester or OBDII scan tool operator's manual for further details.

(c) Check the idle speed.
Idle speed: 700 ± 50 rpm

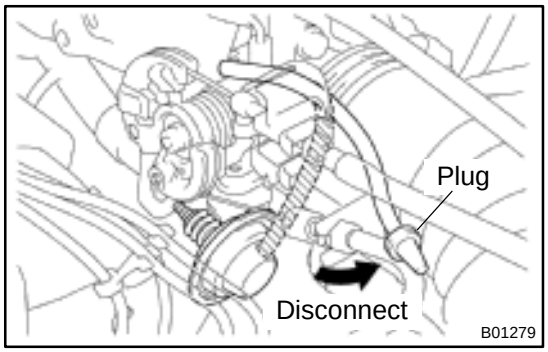

(d) Check and adjust the throttle opener setting speed.
(1) Disconnect the vacuum hose from the throttle opener, and plug the hose end.
(2) Maintain the engine speed at 2,500 rpm.
(3) Release the throttle valve.
(4) Check that the throttle opener is set.
Throttle opener setting speed:
1,300 – 1,500 rpm (w/ Cooling fan OFF)

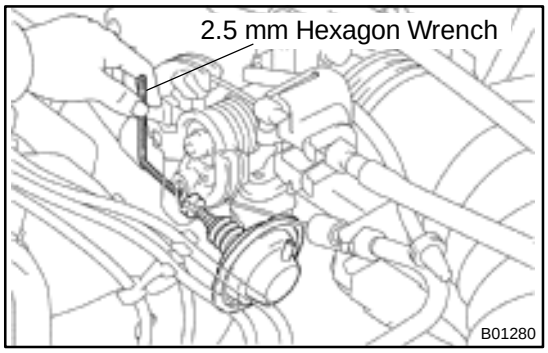

(5) Using a 2.5 mm hexagon wrench, loosen the lock nut and adjust the throttle opener setting speed by turning the throttle opener adjusting screw. Tighten the lock nut.
(6) Reconnect the vacuum hose to the throttle opener.

(e) Disconnect the TOYOTA hand–held tester or OBDII scan tool.

SF0DO–03

COMPONENTS

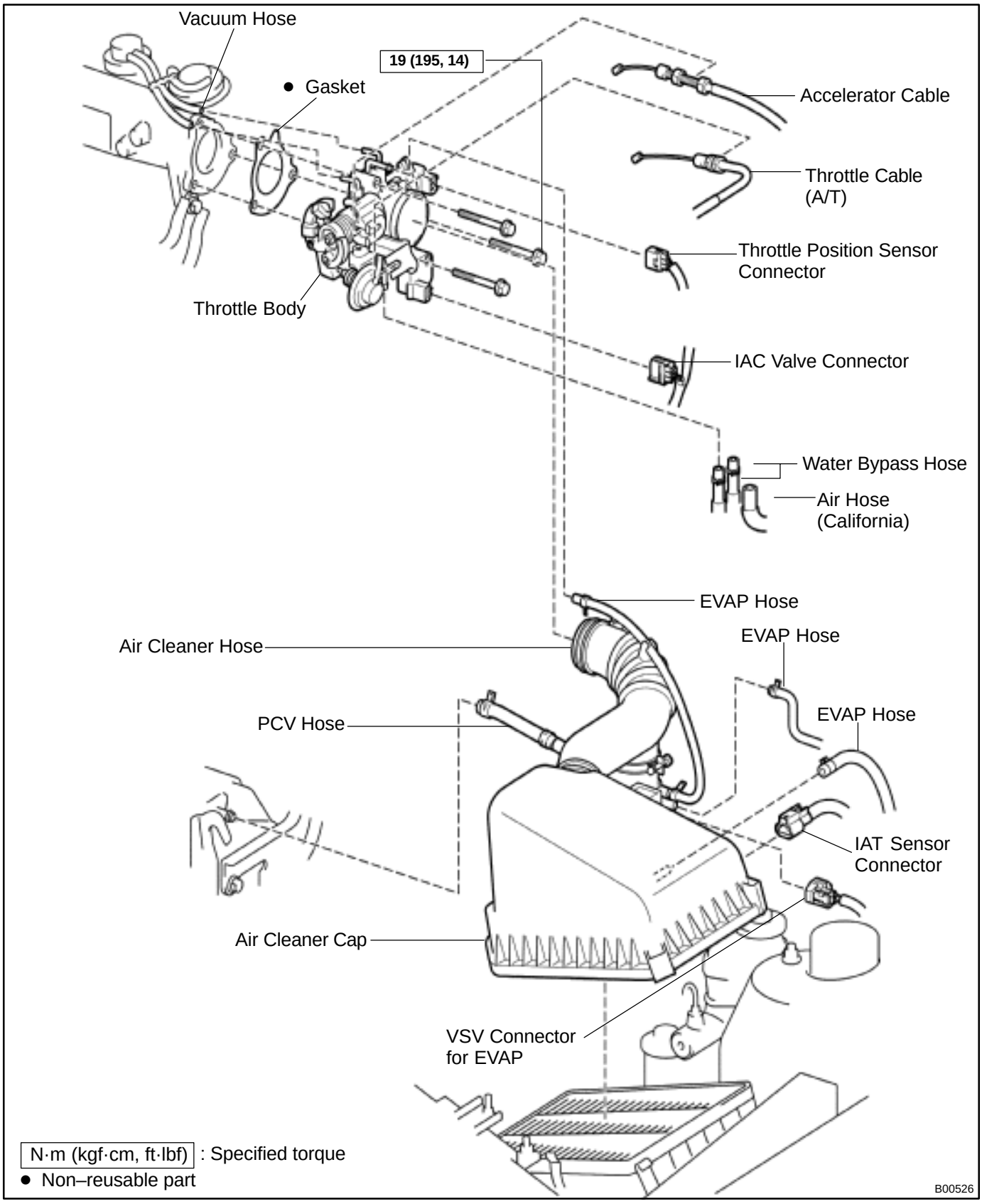

SF0DP–03

REMOVAL

1. DRAIN ENGINE COOLANT

2. REMOVE AIR CLEANER CAP (See page EM–69)

3. DISCONNECT ACCELERATOR CABLE FROM THROTTLE BODY

4. A/T:
DISCONNECT THROTTLE CABLE FROM THROTTLE BODY

5. REMOVE THROTTLE BODY

(a) Disconnect the throttle position sensor connector.

(b) Disconnect the IAC valve connector.

(c) Disconnect the 2 vacuum hoses from the throttle body.

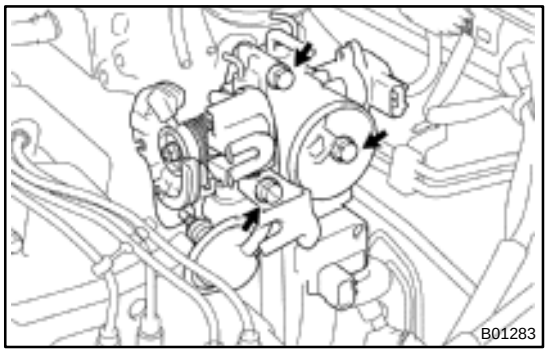

(d) Remove the 3 bolts.

(e) Disconnect the throttle body from the intake manifold.

(f) Remove the gasket.

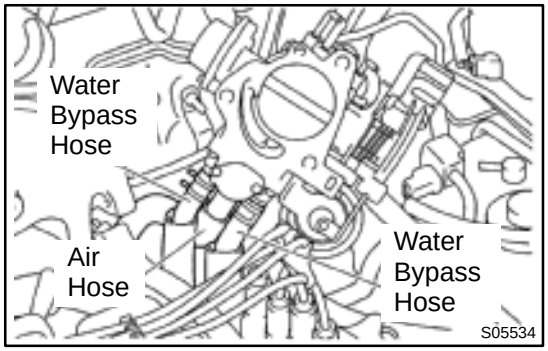

(g) Disconnect the air hose for air assist system (California) and the 2 water bypass hoses from the throttle body, and remove the throttle body.

SF0DQ–03

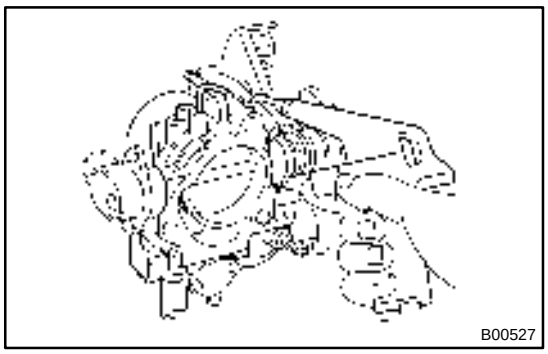

INSPECTION

1. CLEAN THROTTLE BODY

(a) Using a soft brush and carburetor cleaner, clean the cast parts.

(b) Using compressed air, clean all the passages and apertures.

NOTICE:

To prevent deterioration, do not clean the throttle position sensor and throttle opener.

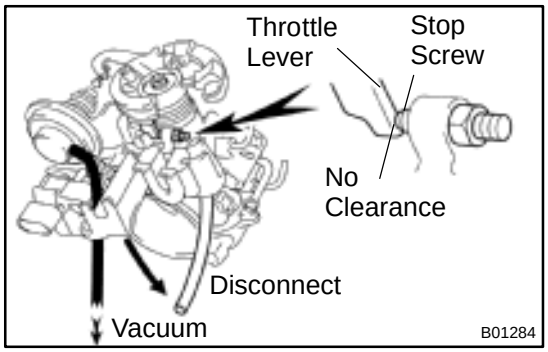

2. INSPECT THROTTLE BODY

(a) Disconnect the throttle opener vacuum hose from the throttle body.

(b) Apply vacuum to the throttle opener.

(c) Check that there is no clearance between the throttle stop screw and throttle lever when the throttle valve is fully closed.

(d) Reconnect the throttle opener vacuum hose to the throttle body.

3. INSPECT THROTTLE POSITION SENSOR

(See page SF–29)

SF0DR–03

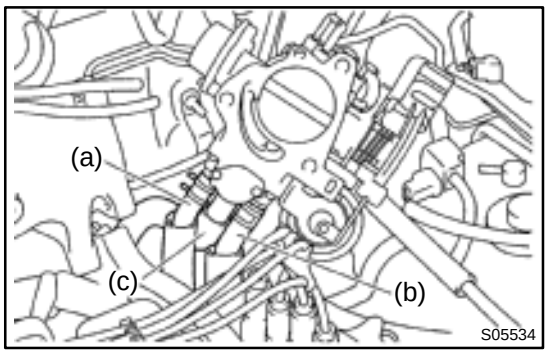

INSTALLATION

1. INSTALL THROTTLE BODY

(a) Connect the water bypass hose (from the water bypass pipe) to the throttle body.

(b) Connect the water bypass hose (from the water outlet) to the throttle body.

(c) California:
Connect the air hose (from the intake manifold) for air assist system to the throttle body.

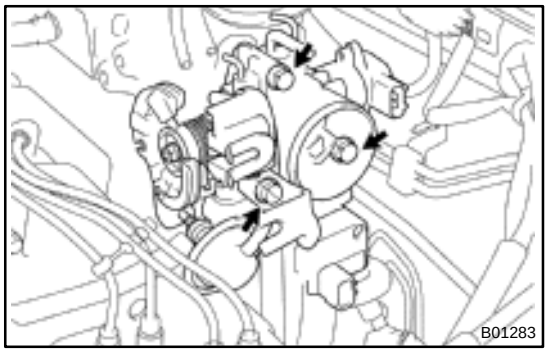

(d) Install a new gasket and the throttle body with the 3 bolts.
Torque: 19 N·m (195 kgf·cm, 14 ft·lbf)

(e) Connect the 2 vacuum hoses to the throttle body.

(f) Connect the throttle position sensor connector.

(g) Connect the IAC valve connector.

2. CONNECT ACCELERATOR CABLE TO THROTTLE BODY

3. A/T:
CONNECT THROTTLE CABLE TO THROTTLE BODY

4. INSTALL AIR CLEANER CAP (See page EM–75)

5. FILL WITH ENGINE COOLANT

IDLE AIR CONTROL (IAC) VALVE

SF0DS–03

ON–VEHICLE INSPECTION

1. INSPECT IAC VALVE OPERATION

(a) Initial conditions:
- Engine at normal operating temperature
- Idle speed set correctly
- Transmission in neutral position

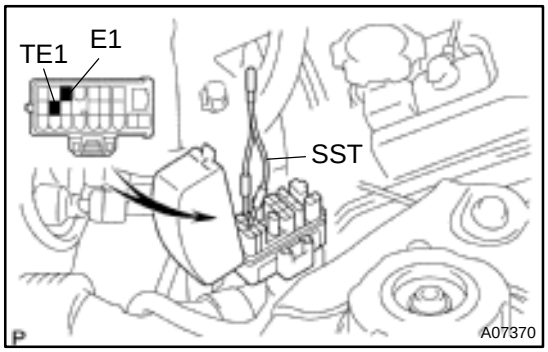

(b) Using SST, connect terminals TE1 and E1 of the DLC1.
SST 09843–18020

(c) After the engine speed is kept at 900 – 1,300 rpm for 5 seconds, check that it returns to idle speed.

If the engine speed operation is not as specified, check the IAC valve, wiring and ECM.

(d) Remove the SST from the DLC1.
SST 09843–18020

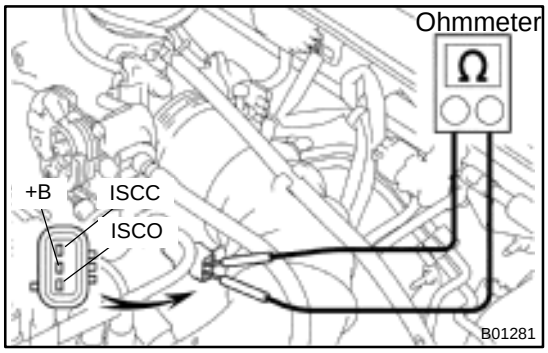

2. INSPECT IAC VALVE RESISTANCE

NOTICE:

"Cold" and "Hot" in these sentences express the temperature of the coils themselves. "Cold" is from –10˚C (14˚F) to 50˚C (122˚F) and "Hot" is from 50˚C (122˚F) to 100˚C (212˚F).

(a) Disconnect the IAC valve connector.

(b) Using an ohmmeter, measure the resistance between terminal +B and other terminals (ISCC, ISCO).

Resistance:

Cold	17.0 – 24.5 Ω
Hot	21.5 – 28.5 Ω

If the resistance is not as specified, replace the IAC valve.

(c) Reconnect the IAC valve connector.

SF0DT–03

COMPONENTS

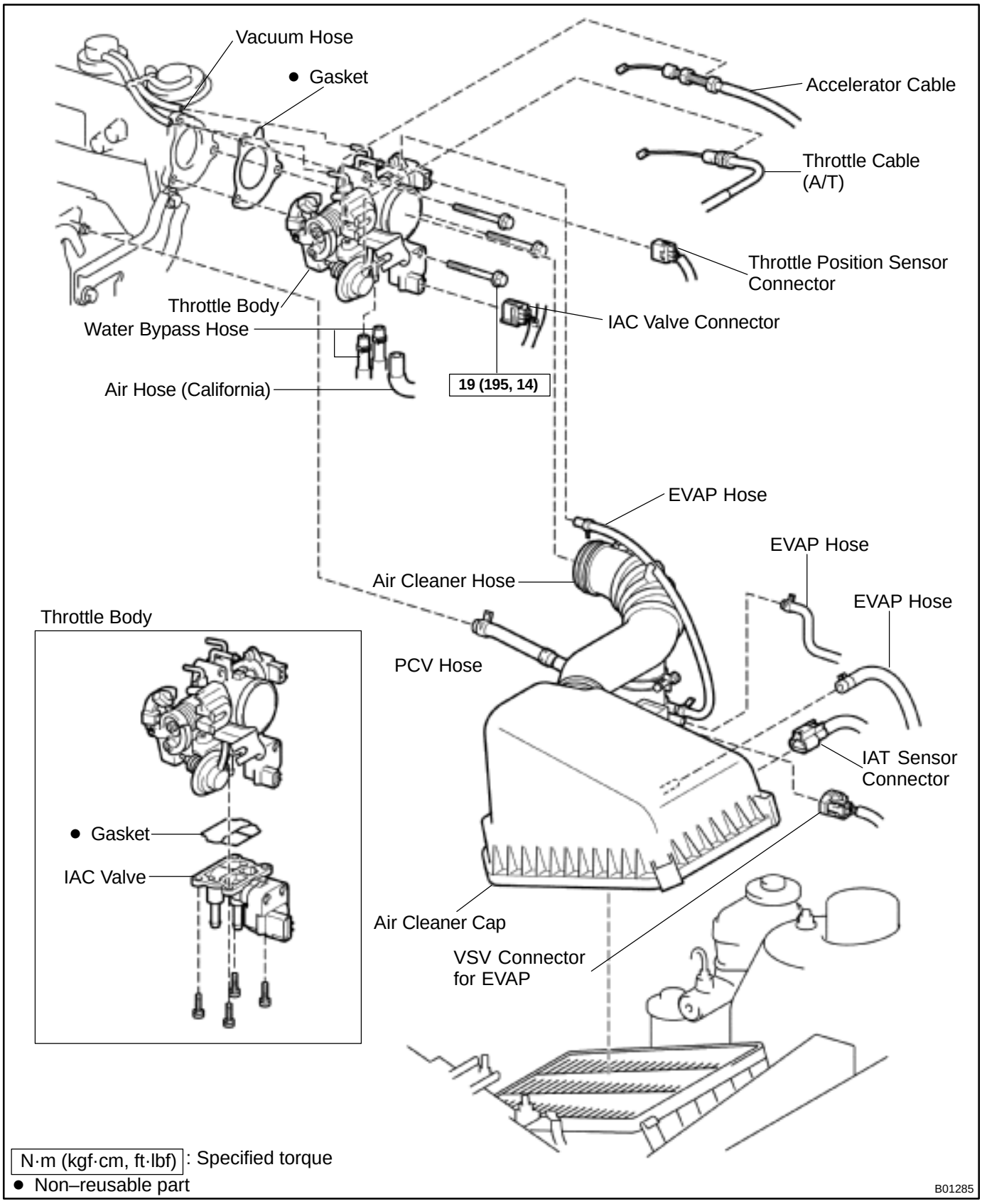

SF0DU–03

REMOVAL

1. REMOVE THROTTLE BODY (See page SF–32)

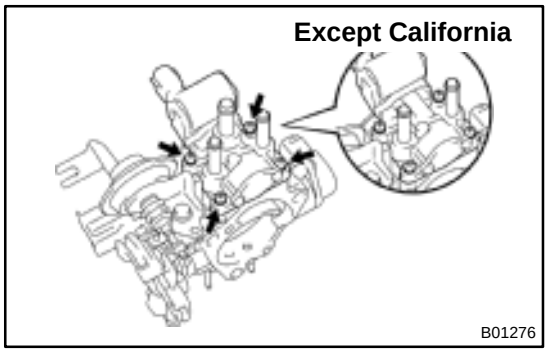

2. REMOVE IAC VALVE

Remove the 4 screws, IAC valve and gasket.

SF0DV–03

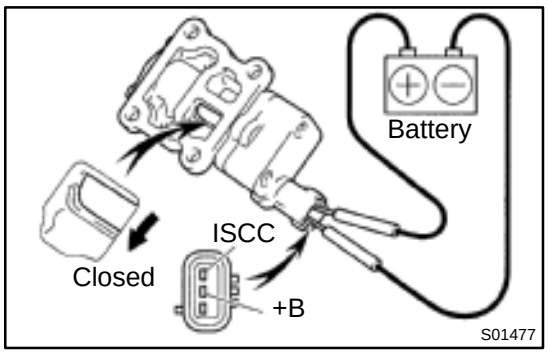

INSPECTION

INSPECT IAC VALVE OPERATION

(a) Connect the positive (+) lead from the battery to terminal +B and negative (–) lead to terminal ISCC, and check that the valve is closed.

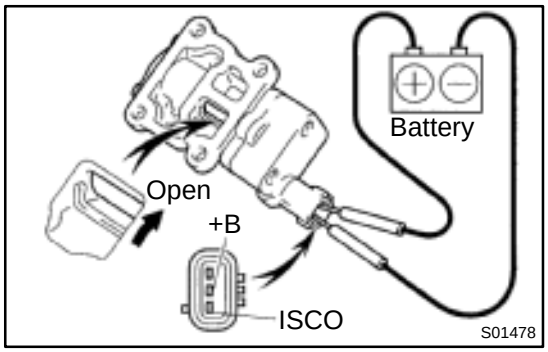

(b) Connect the positive (+) lead from the battery to terminal +B and negative (–) lead to terminal ISCO, and check that the valve is open.

If operation is not as specified, replace the IAC valve.

SF0DW–03

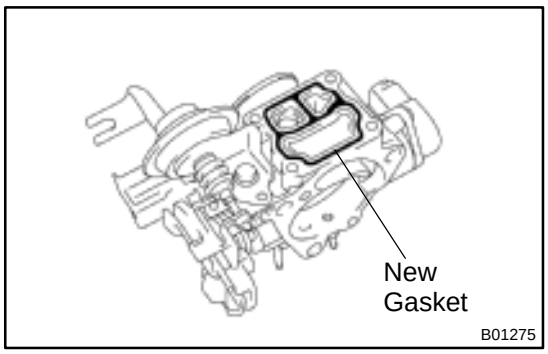

INSTALLATION

1. INSTALL IAC VALVE

(a) Place a new gasket on the throttle body.

(b) Install the IAC valve with the 4 screws.

2. INSTALL THROTTLE BODY (See page SF–34)

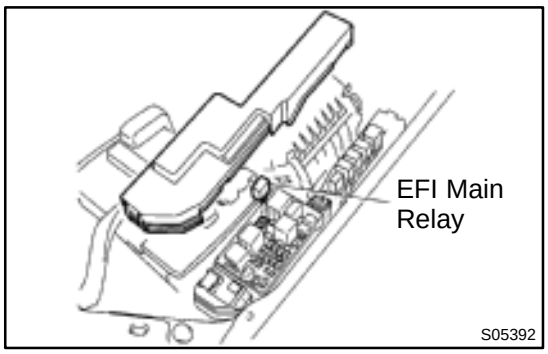

EFI MAIN RELAY

SF0DX–03

INSPECTION

1. REMOVE RELAY BOX COVER

2. REMOVE EFI MAIN RELAY (Marking: EFI)

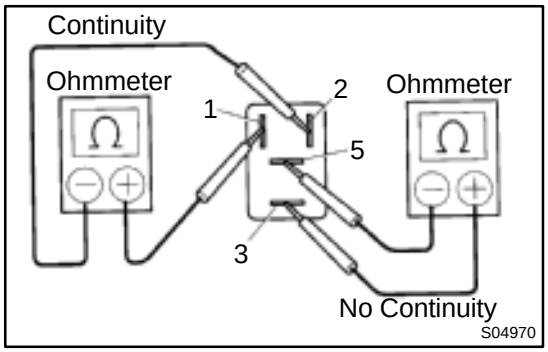

3. INSPECT EFI MAIN RELAY

(a) Inspect the relay continuity.

(1) Using an ohmmeter, check that there is continuity between terminals 1 and 2.

If there is no continuity, replace the relay.

(2) Check that there is no continuity between terminals 3 and 5.

If there is continuity, replace the relay.

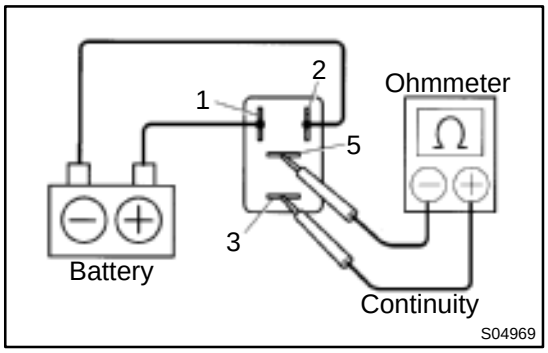

(b) Inspect the relay operation.

(1) Apply battery positive voltage across terminals 1 and 2.

(2) Using an ohmmeter, check that there is continuity between terminals 3 and 5.

If there is no continuity, replace the relay.

4. REINSTALL EFI MAIN RELAY

5. REINSTALL RELAY BOX COVER

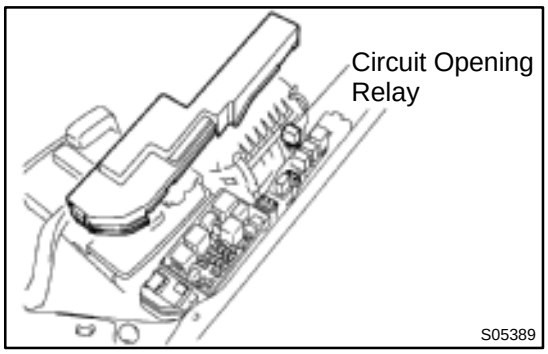

CIRCUIT OPENING RELAY

SF0DY–03

INSPECTION

1. REMOVE RELAY BOX COVER

2. REMOVE CIRCUIT OPENING RELAY (Marking: CIR OPN)

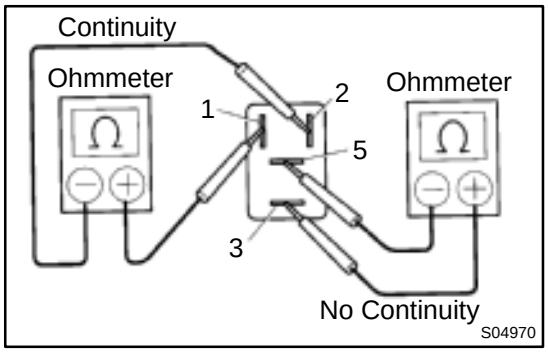

3. INSPECT CIRCUIT OPENING RELAY

(a) Inspect the relay continuity.

(1) Using an ohmmeter, check that there is continuity between terminals 1 and 2.

If there is no continuity, replace the relay.

(2) Check that there is no continuity between terminals 3 and 5.

If there is continuity, replace the relay.

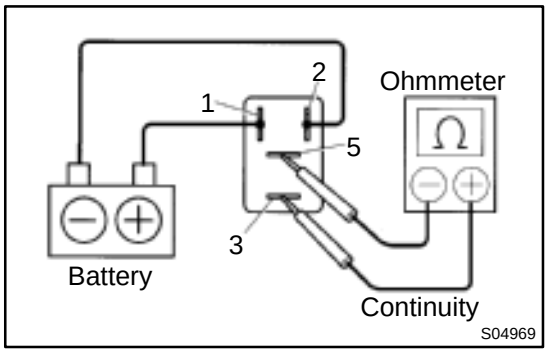

(b) Inspect the relay operation.

(1) Apply battery positive voltage across terminals 1 and 2.

(2) Using an ohmmeter, check that there is continuity between terminals 3 and 5.

If there is no continuity, replace the relay.

4. REINSTALL CIRCUIT OPENING RELAY

5. REINSTALL RELAY BOX COVER

VSV FOR EXHAUST GAS RECIRCULATION (EGR)

SF0DZ–03

COMPONENTS

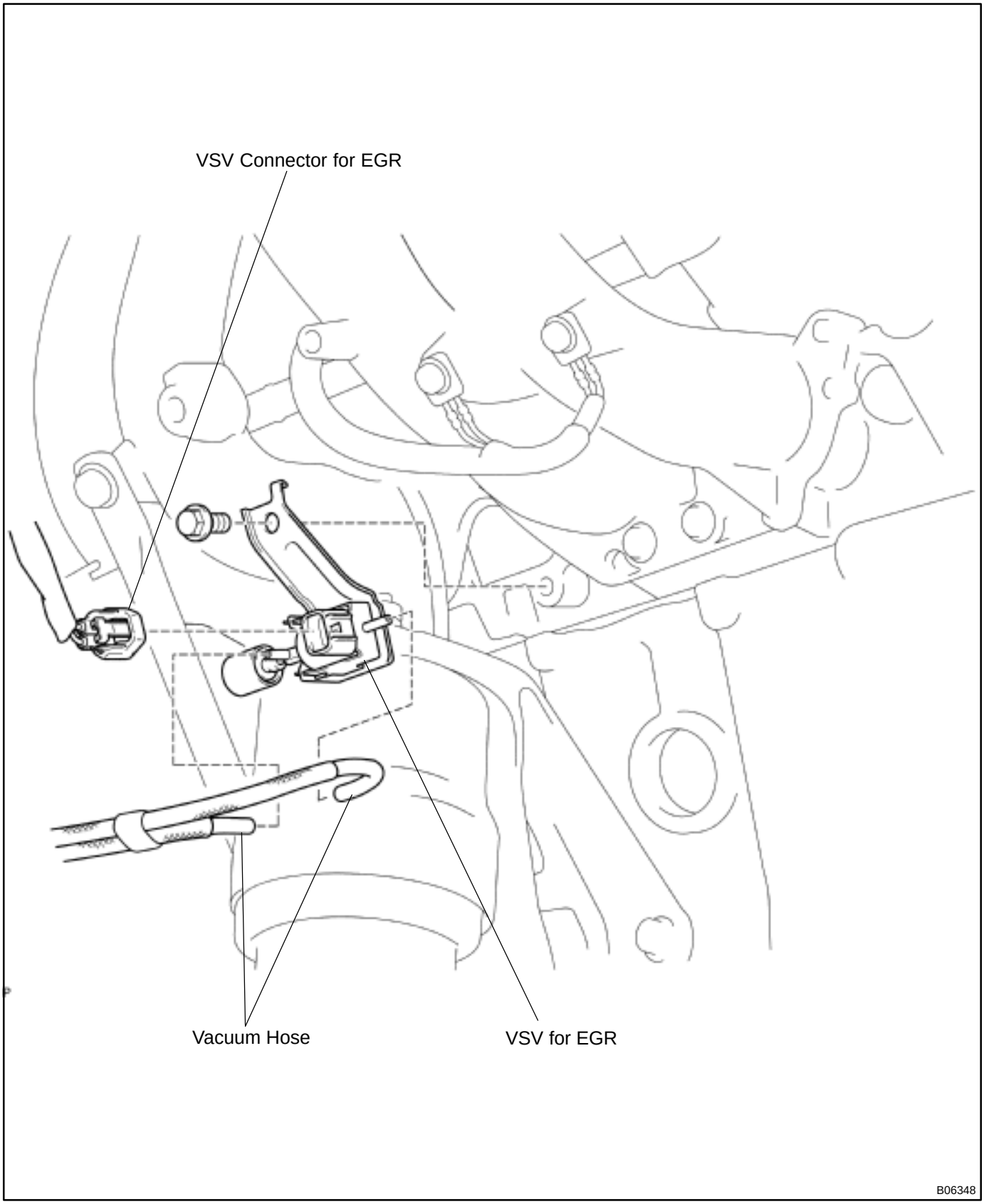

SF0E0–03

INSPECTION

1. REMOVE VSV

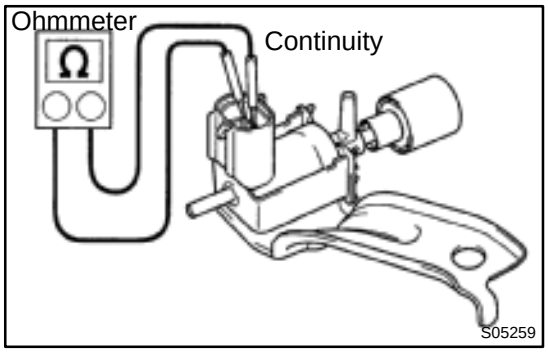

2. INSPECT VSV

(a) Inspect the VSV for open circuit.
Using an ohmmeter, check that there is continuity between the terminals.
Resistance: 33 – 39 Ω at 20˚C (68˚F)

If there is no continuity, replace the VSV.

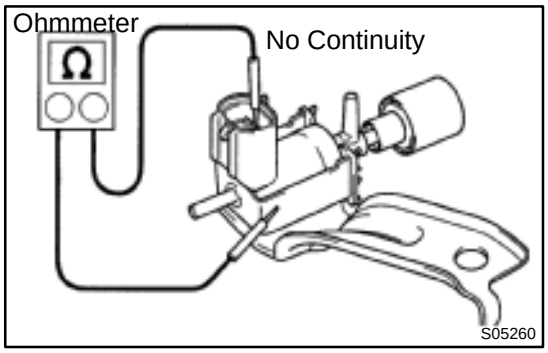

(b) Inspect the VSV for ground.
Using an ohmmeter, check that there is no continuity between each terminal and the body.

If there is continuity, replace the VSV.

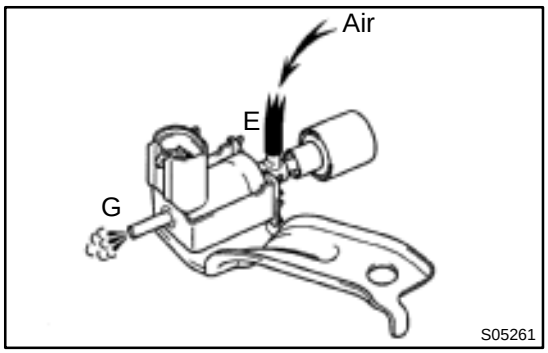

(c) Inspect the VSV operation.
(1) Check that air flows from ports E to G.

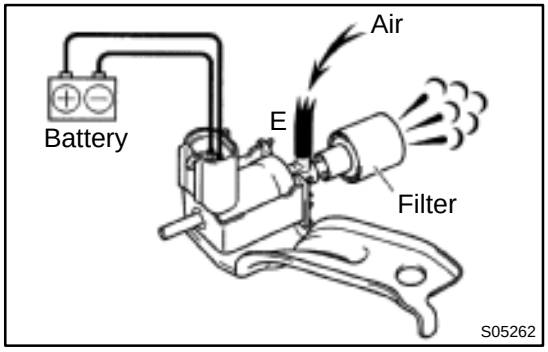

(2) Apply battery positive voltage across the terminals.
(3) Check that air flows from port E to filter.

If operation is not as specified, replace the VSV.

3. REINSTALL VSV

VSV FOR EVAPORATIVE EMISSION (EVAP)

COMPONENTS

SF0E1–03

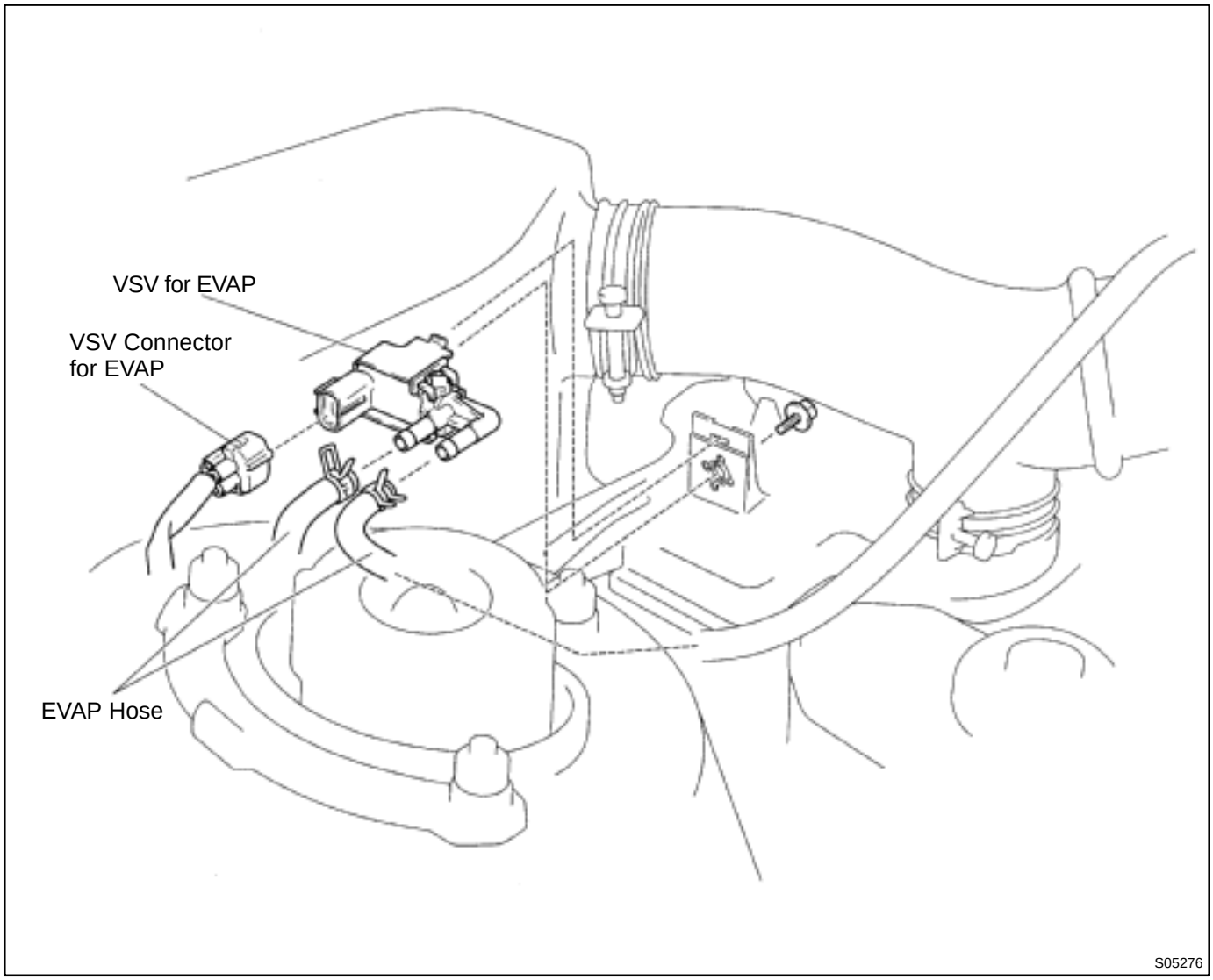

SF0E2–03

INSPECTION

1. REMOVE VSV

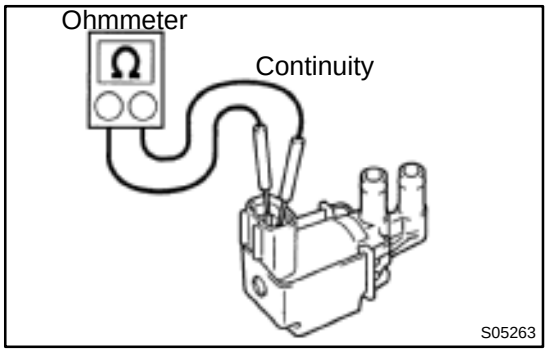

2. INSPECT VSV

(a) Inspect the VSV for open circuit.

Using an ohmmeter, check that there is continuity between the terminals.

Resistance: 30 – 34 Ω at 20˚C (68˚F)

If there is no continuity, replace the VSV.

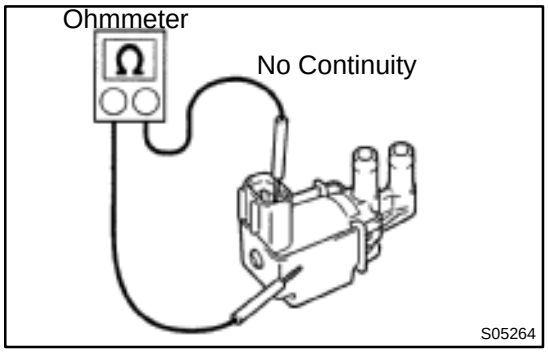

(b) Inspect the VSV for ground.

Using an ohmmeter, check that there is no continuity between each terminal and the body.

If there is continuity, replace the VSV.

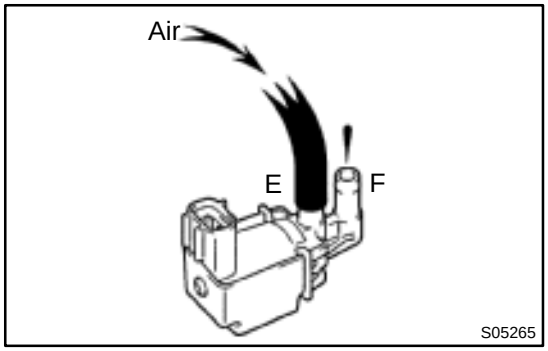

(c) Inspect the VSV operation.

(1) Check that air dose not flow from ports E to F.

NOTICE:

Never apply more than 93 kPa (0.95 kgf/cm^2, 13.5 psi) of pressure compressed air to the VSV.

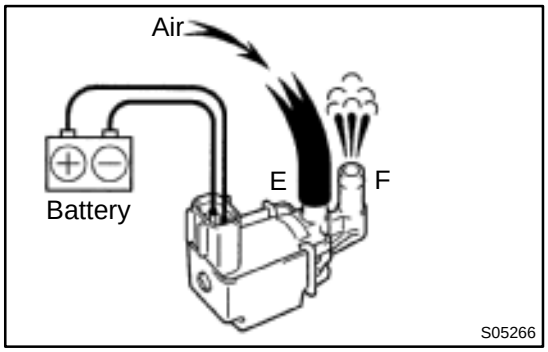

(2) Apply battery positive voltage across the terminals.

(3) Check that air flows from ports E to F.

If operation is not as specified, replace the VSV.

3. REINSTALL VSV

VSV FOR VAPOR PRESSURE SENSOR

SF0E3–03

COMPONENTS

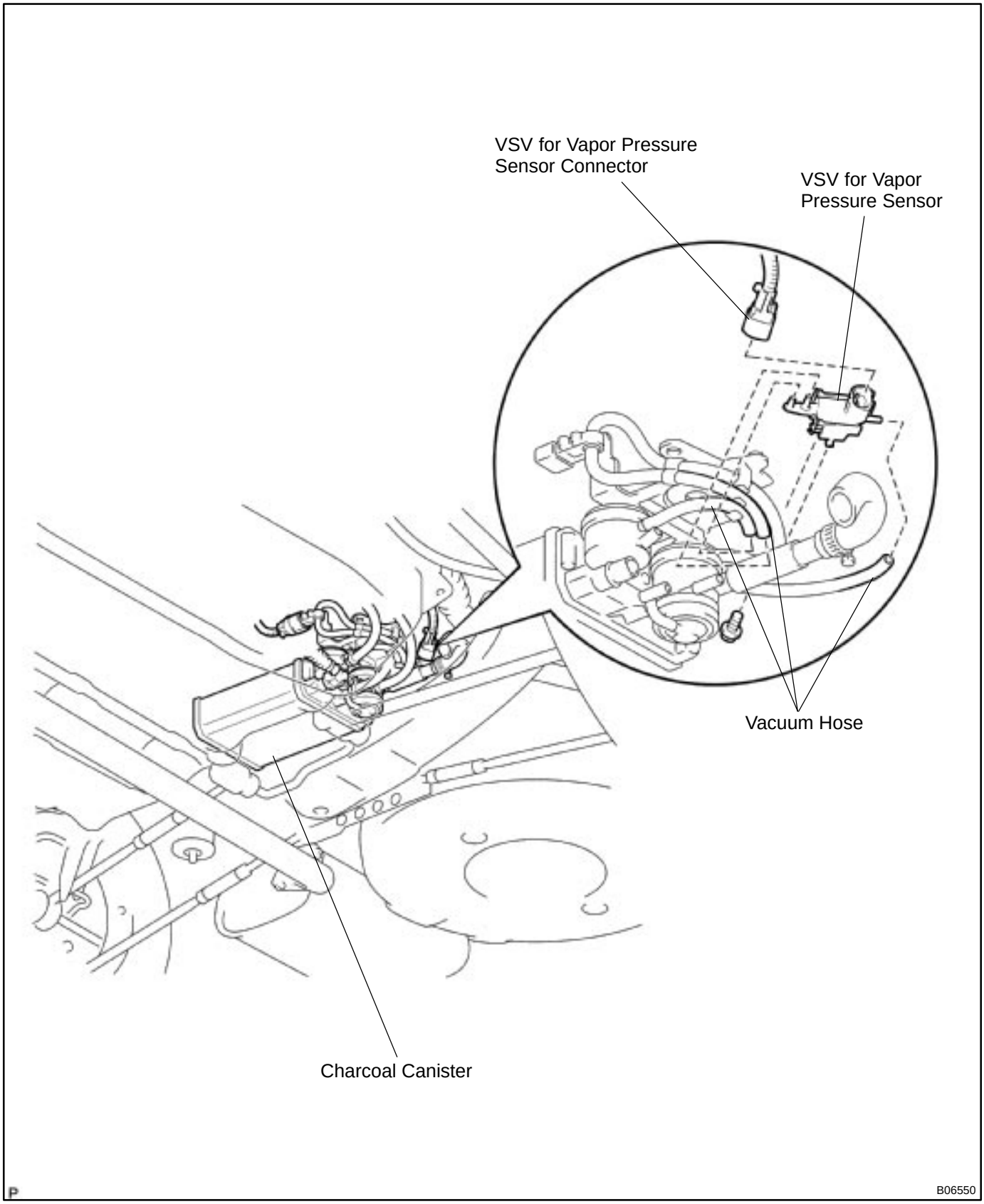

SF0E4–04

INSPECTION

1. REMOVE VSV

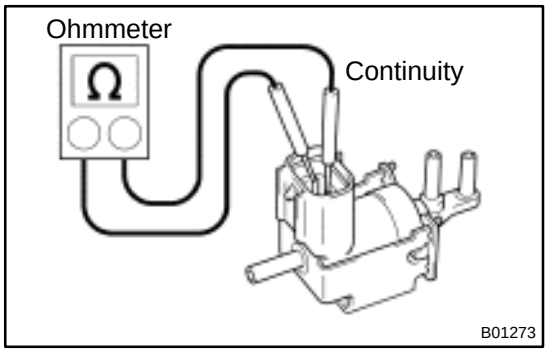

2. INSPECT VSV

(a) Inspect the VSV for open circuit.
Using an ohmmeter, check that there is continuity between the terminals.
Resistance: 33 – 39 Ω at 20˚C (68˚F)

If there is no continuity, replace the VSV.

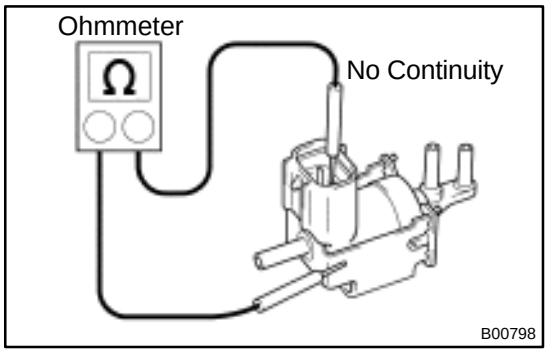

(b) Inspect the VSV for ground.
Using an ohmmeter, check that there is no continuity between each terminal and the body.

If there is continuity, replace the VSV.

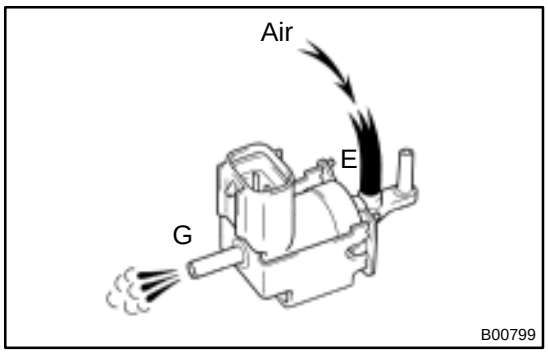

(c) Inspect the VSV operation.
(1) Check that air flows from ports E to G.

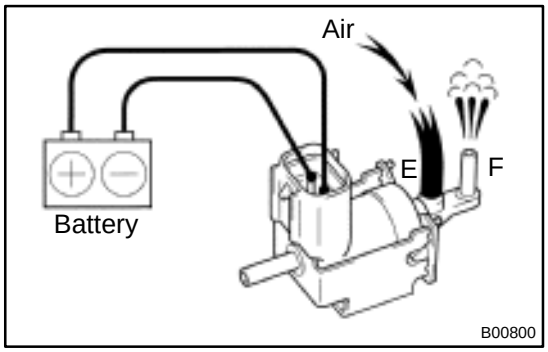

(2) Apply battery positive voltage across the terminals.
(3) Check that air flows from ports E to F.

If operation is not as specified, replace the VSV.

3. REINSTALL VSV

ENGINE COOLANT TEMPERATURE (ECT) SENSOR

SF0E5–03

COMPONENTS

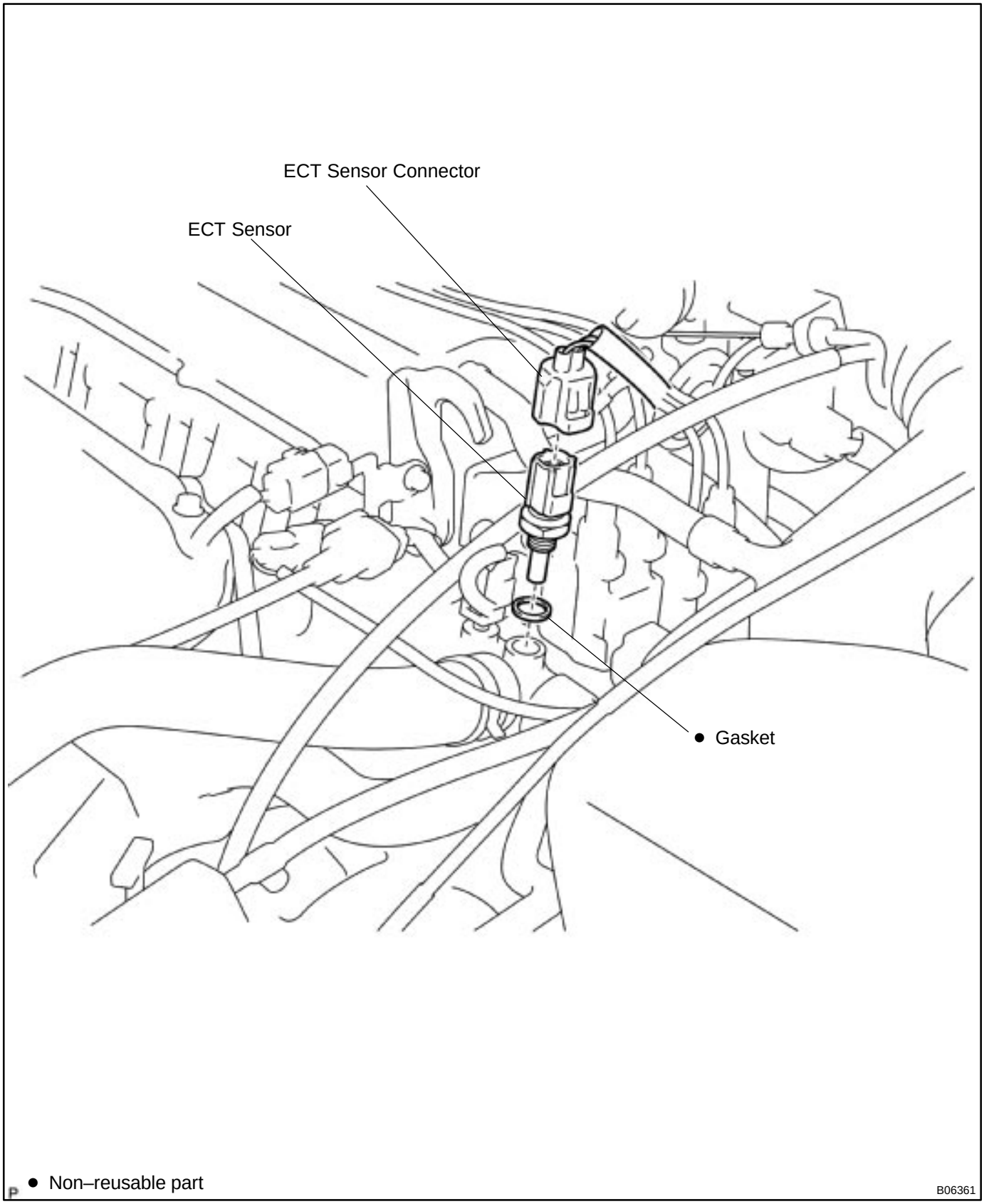

SF0E6–03

INSPECTION

1. DRAIN ENGINE COOLANT

2. REMOVE ECT SENSOR

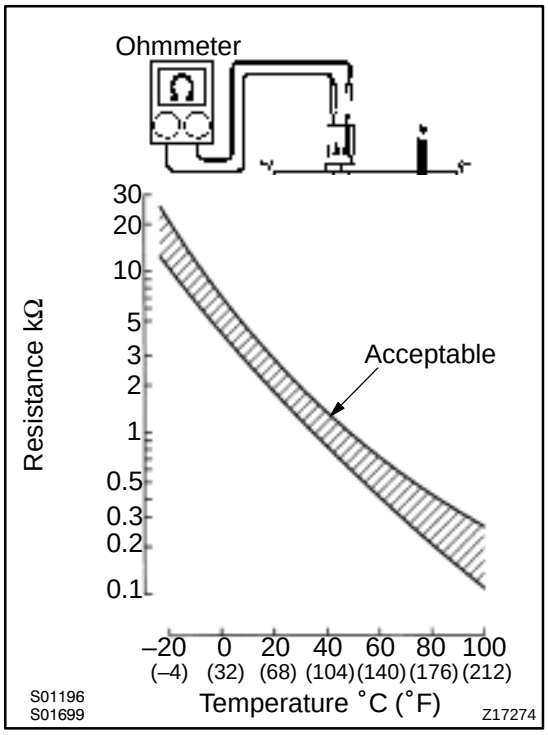

3. INSPECT ECT SENSOR

Using an ohmmeter, measure the resistance between the terminals.

Resistance: Refer to the graph

If the resistance is not as specified, replace the ECT sensor.

4. REINSTALL ECT SENSOR

5. REFILL WITH ENGINE COOLANT

INTAKE AIR TEMPERATURE (IAT) SENSOR

SF0E7–03

COMPONENTS

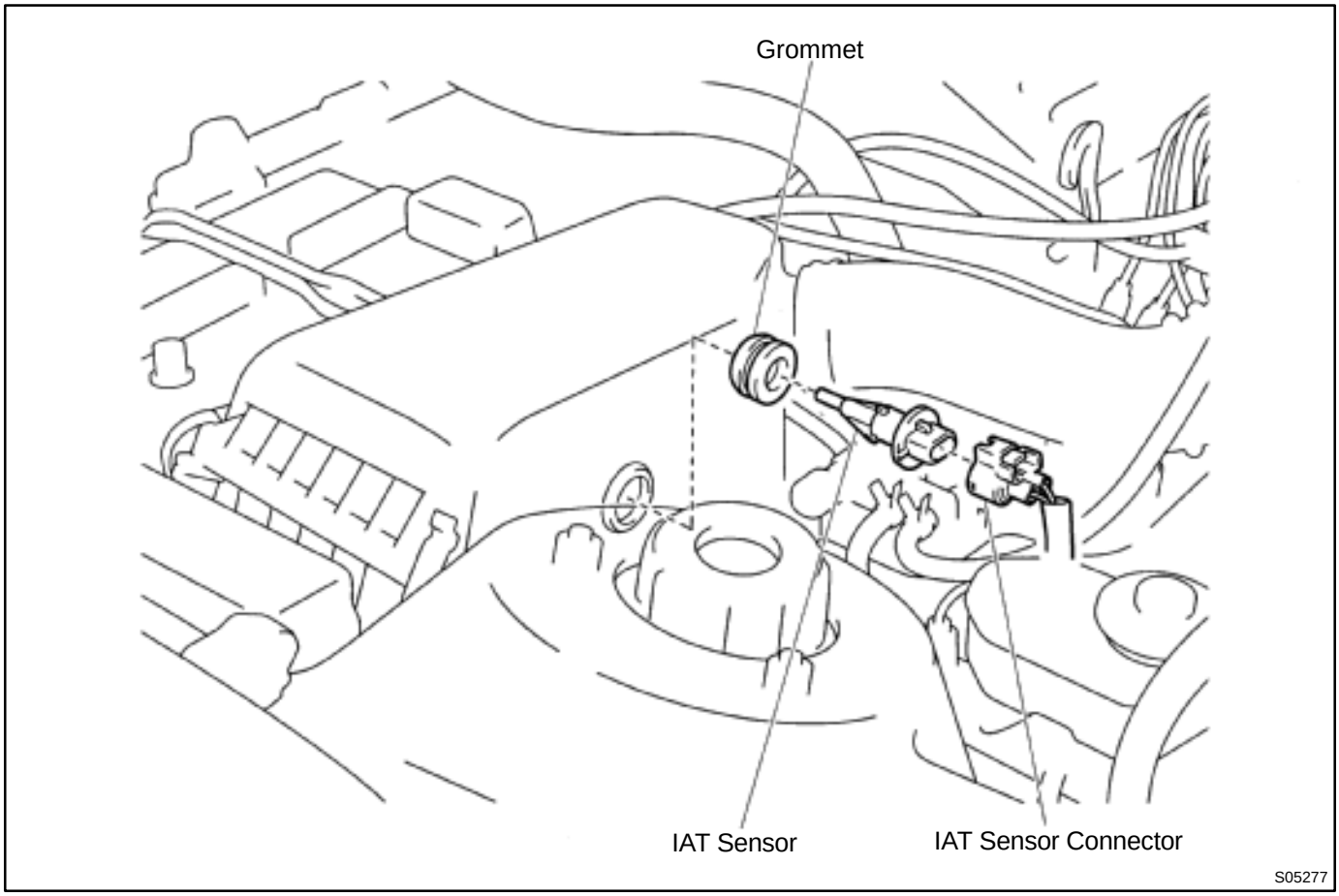

SF0E8–03

INSPECTION

1. REMOVE IAT SENSOR

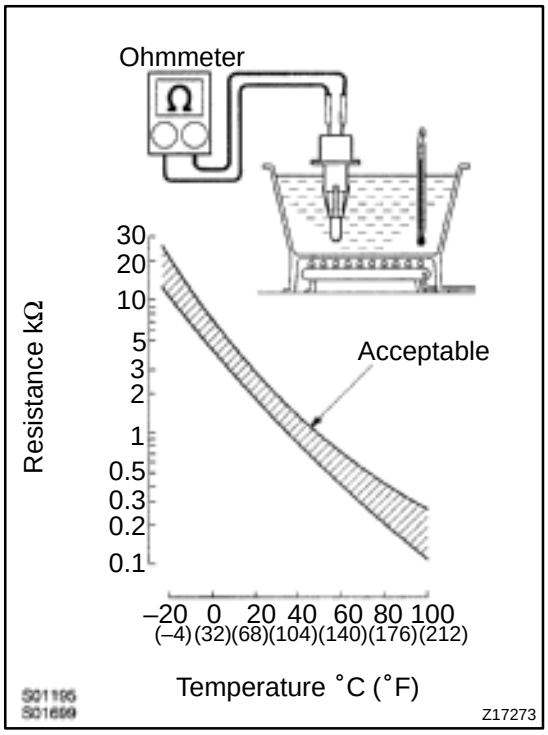

2. INSPECT IAT SENSOR

Using an ohmmeter, measure the resistance between the terminals.

Resistance: Refer to the graph

If the resistance is not as specified, replace the sensor.

3. REINSTALL IAT SENSOR

MANIFOLD ABSOLUTE PRESSURE (MAP) SENSOR

COMPONENTS

SF0E9–03

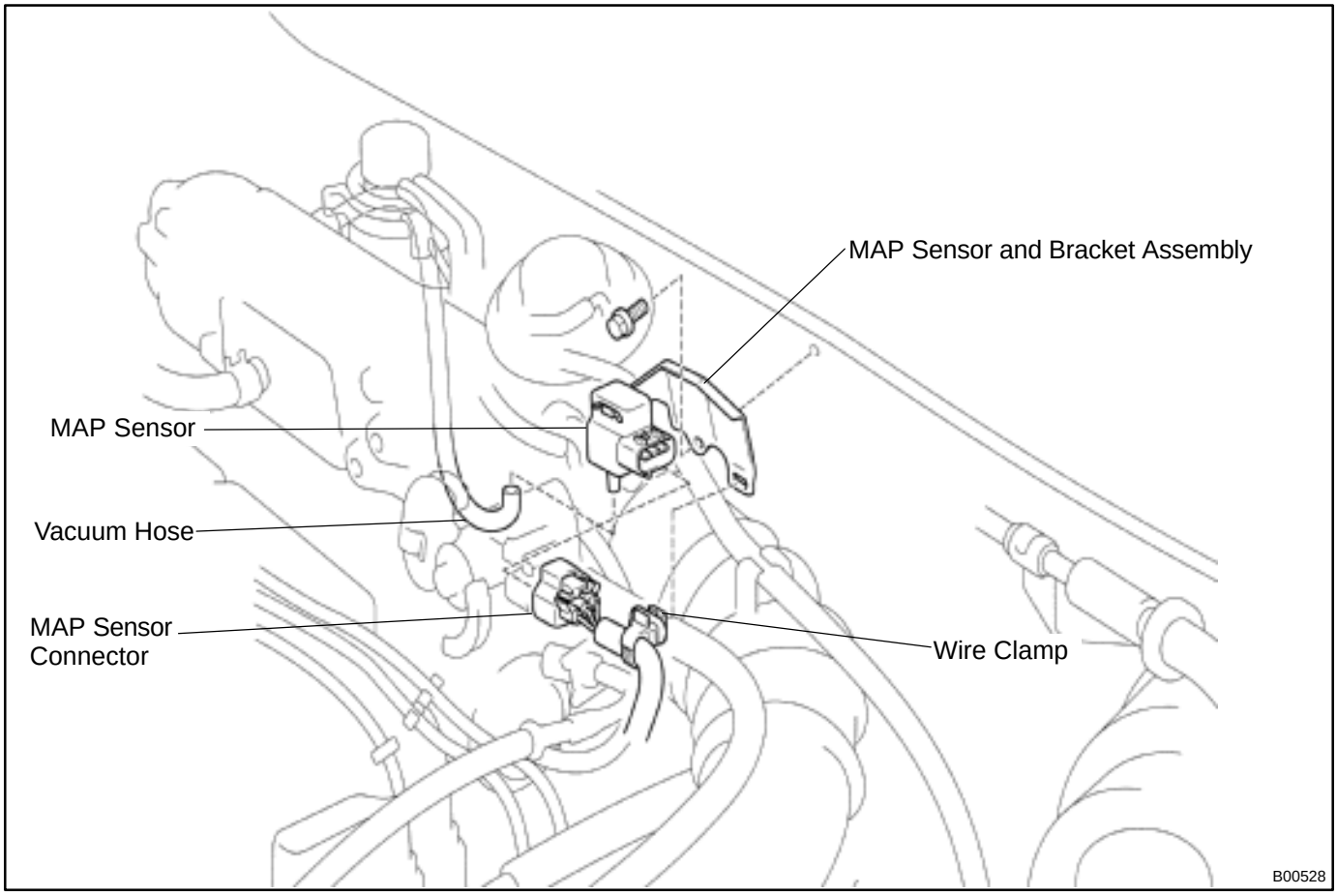

SF0EA–03

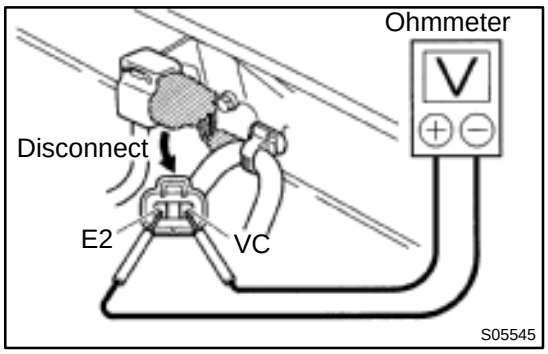

INSPECTION

1. INSPECT POWER SOURCE VOLTAGE OF MAP SENSOR

(a) Disconnect the MAP sensor connector.
(b) Turn the ignition switch ON.
(c) Using a voltmeter, measure the voltage between connector terminals VC and E2 of the wiring harness side.
Voltage: 4.5 – 5.5 V
(d) Turn the ignition switch OFF.
(e) Reconnect the MAP sensor connector.

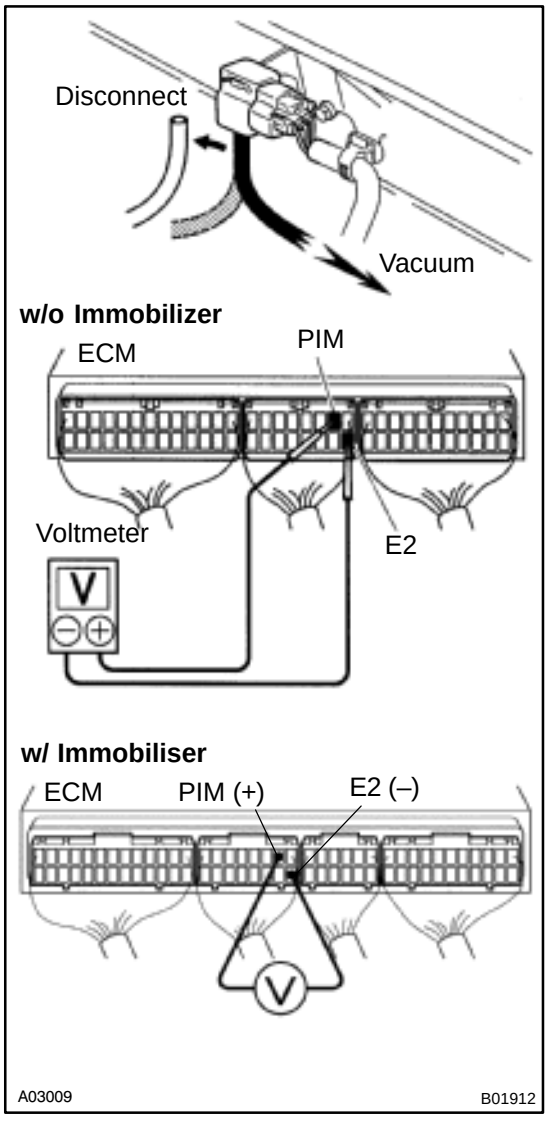

2. INSPECT POWER OUTPUT OF MAP SENSOR

(a) Turn the ignition switch ON.
(b) Disconnect the vacuum hose from the MAP sensor.
(c) Connect a voltmeter to terminals PIM and E2 of the ECM, and measure the output voltage under ambient atmospheric pressure.
(d) Apply vacuum to the MAP sensor in 13.3 kPa (100 mmHg, 3.94 in.Hg) segments to 66.7 kPa (500 mmHg, 19.69 in.Hg).
(e) Measure the voltage drop from step (c) above for each segment.

Voltage Drop:

Applied Vacuum kPa (mmHg, in.Hg)	13.3 (100, 3.94)	26.7 (200, 7.87)	40.0 (300, 11.81)	53.5 (400, 15.75)	66.7 (500, 19.69)
Voltage drop V	0.3 – 0.5	0.7 – 0.9	1.1 – 1.3	1.5 – 1.7	1.9 – 2.1

(f) Turn the ignition switch OFF.
(g) Reconnect the vacuum hose to the MAP sensor.

VAPOR PRESSURE SENSOR

SF0EF–04

COMPONENTS

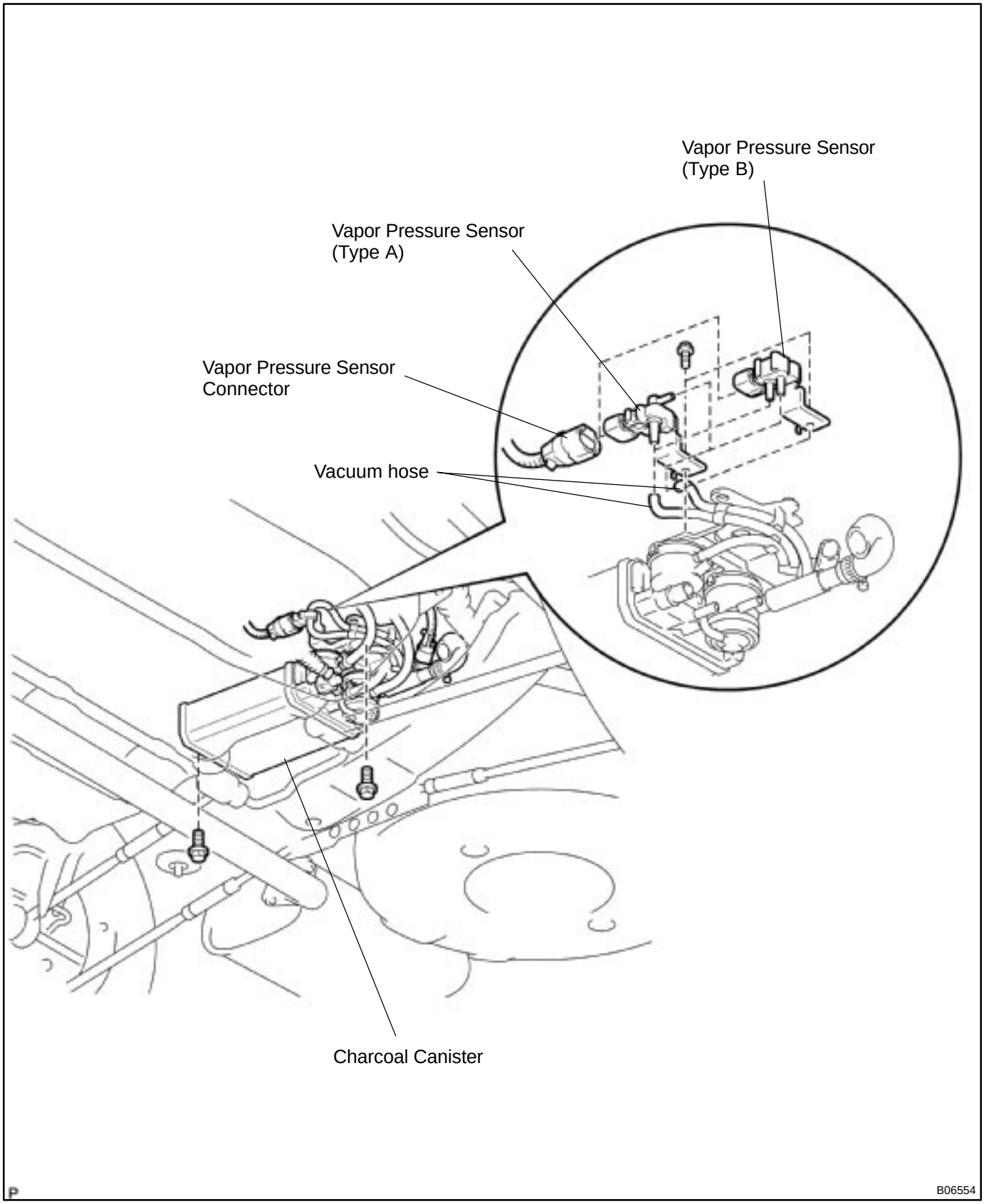

SF0EG–03

INSPECTION

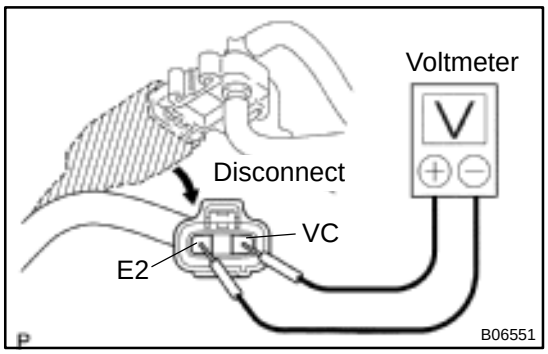

1. INSPECT POWER SOURCE VOLTAGE OF VAPOR PRESSURE SENSOR

(a) Disconnect the vapor pressure sensor connector.
(b) Turn the ignition switch ON.
(c) Using a voltmeter, measure the voltage between connector terminals VC and E2 of the wiring harness side.
Voltage: 4.5 – 5.5 V
(d) Turn the ignition switch OFF.
(e) Reconnect the vapor pressure sensor connector.

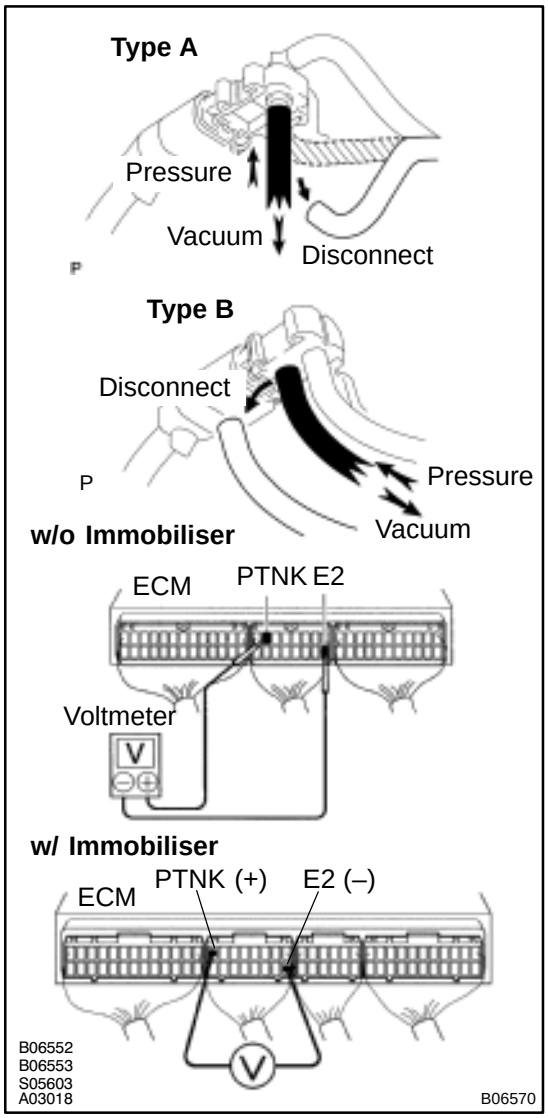

2. INSPECT POWER OUTPUT OF VAPOR PRESSURE SENSOR

(a) Turn the ignition switch ON.
(b) Disconnect the vacuum hose from the vapor pressure sensor.
(c) Connect a voltmeter to terminals PTNK and E2 of the ECM, and measure the output voltage under the following conditions:
(1) Apply vacuum (2.0 kPa (15 mmHg, 0.59 in.Hg)) to the vapor pressure sensor.
Voltage: 1.3 – 2.1 V
(2) Release the vacuum from the vapor pressure sensor.
Voltage: 3.0 – 3.6 V
(3) Apply pressure (1.5 kPa (15 gf/cm^2, 0.22 psi)) to the vapor pressure sensor.
Voltage: 4.2 – 4.8 V
(d) Turn the ignition switch OFF.
(e) Reconnect the vacuum hose to the vapor pressure sensor.

KNOCK SENSOR

SF0ED–03

COMPONENTS

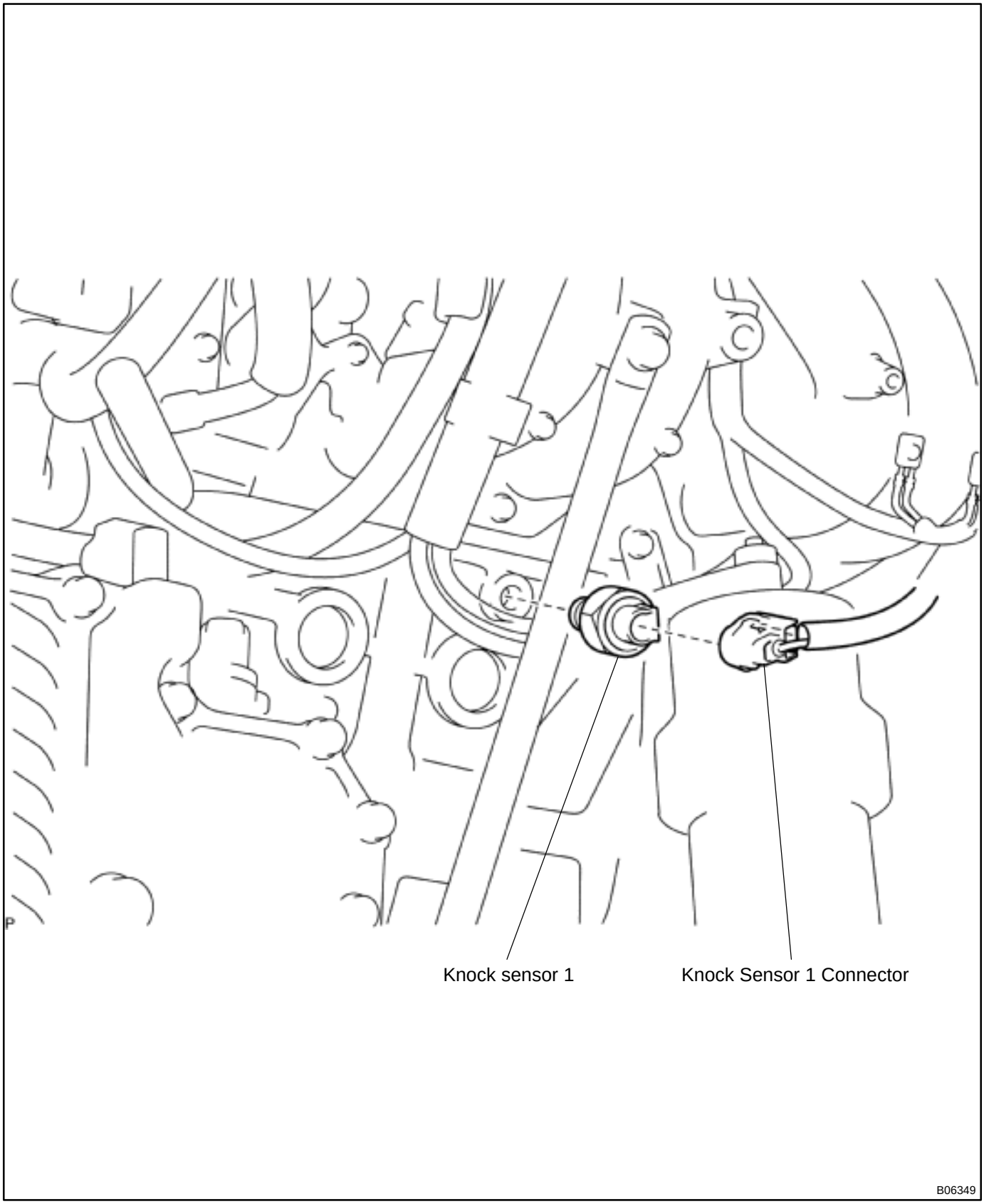

SF0EE–03

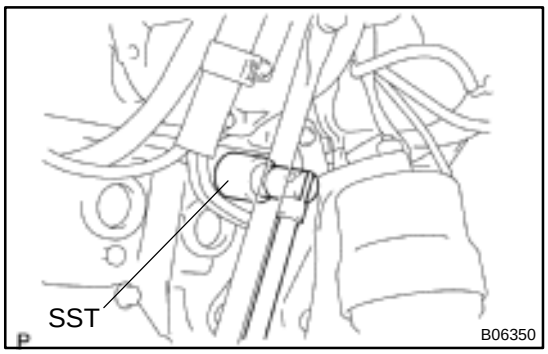

INSPECTION

1. REMOVE KNOCK SENSOR 1

(a) Disconnect the knock sensor connector.

(b) Using SST, remove the knock sensor.

SST 09816–30010

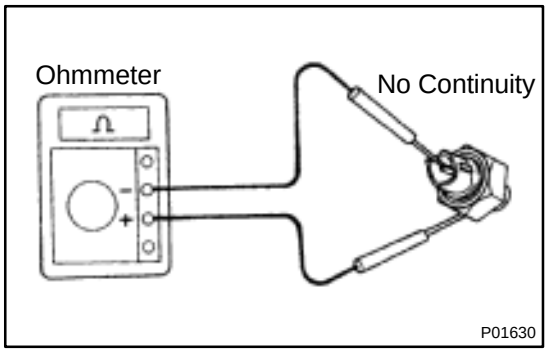

2. INSPECT KNOCK SENSOR 1

Using an ohmmeter, check that there is no continuity between the terminal and body.

If there is continuity, replace the sensor.

3. REINSTALL KNOCK SENSOR 1

(a) Using SST, install the knock sensor.

SST 09816–30010

Torque: 44 N·m (450 kgf·cm, 32 ft·lbf)

(b) Connect the knock sensor connector.

AIR–FUEL RATIO (A/F) SENSOR (California)

COMPONENTS

SF0EB–03

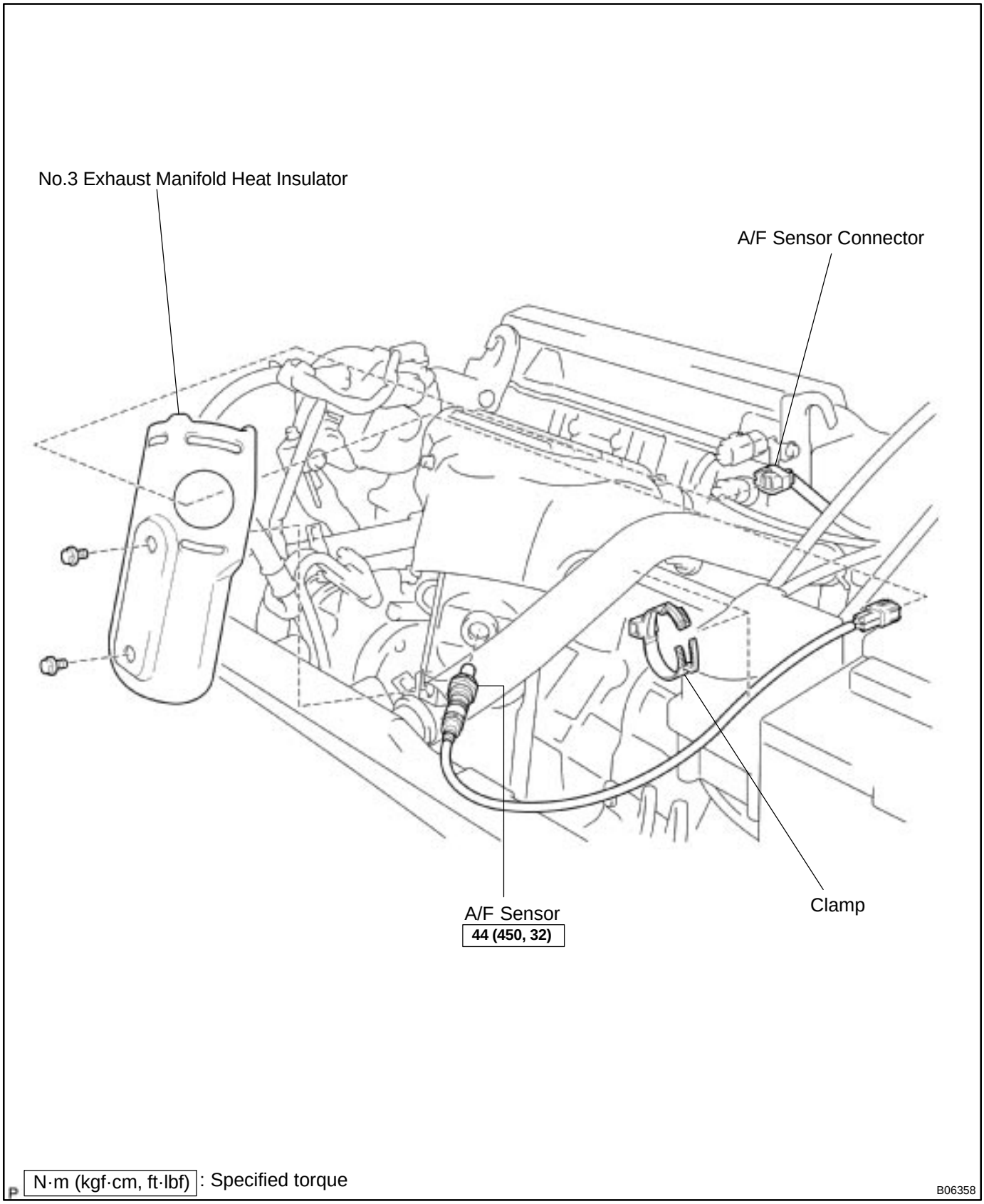

SF0EC–04

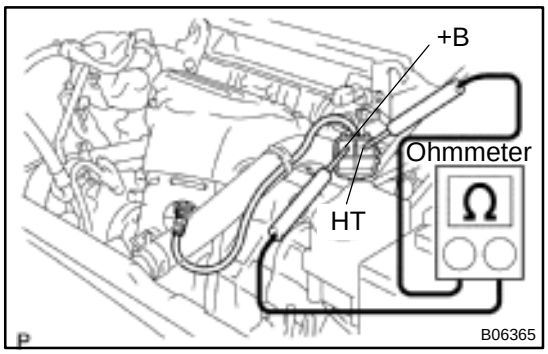

INSPECTION

1. INSPECT HEATER RESISTANCE OF A/F SENSOR

(a) Disconnect the A/F sensor connector.

(b) Using an ohmmeter, measure the resistance between terminals +B and HT.

Resistance: 0.8 – 1.4 Ω at 20˚C (68˚F)

If the resistance is not as specified, replace the sensor.

Torque: 44 N·m (450 kgf·cm, 32 ft·lbf)

(c) Reconnect the A/F sensor connector.

2. INSPECT OPERATION OF A/F SENSOR

(See page DI–152)

HEATED OXYGEN SENSOR (Bank 1 Sensor 1/Except Calif.)

SF0EH–03

COMPONENTS

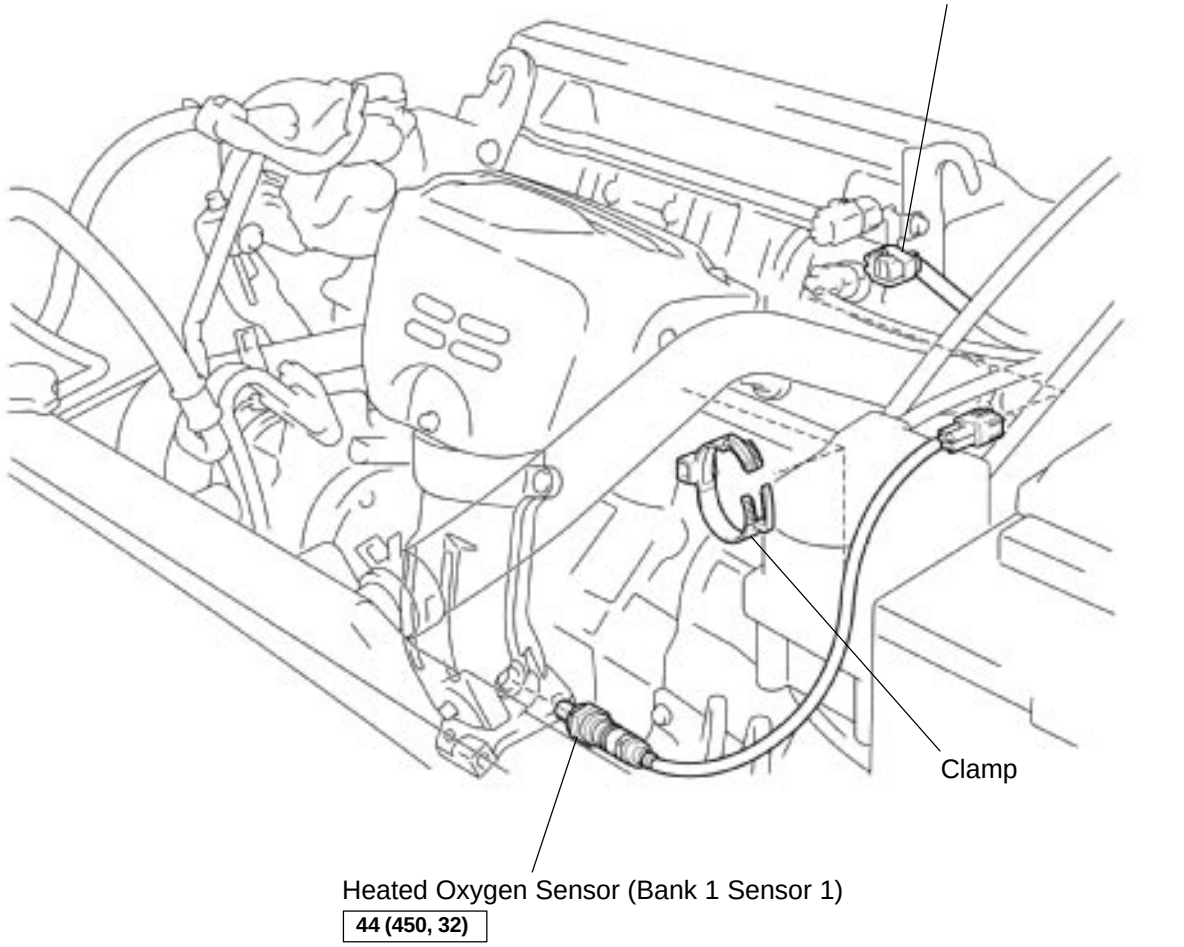

N·m (kgf·cm, ft·lbf) : Specified torque

B06359

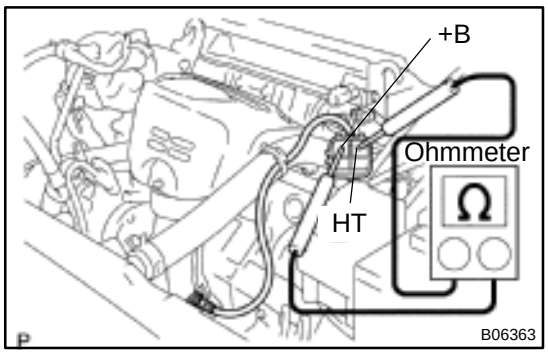

SF0EI–03

INSPECTION

1. INSPECT HEATER RESISTANCE OF HEATED OXYGEN SENSOR

(a) Disconnect the oxygen sensor connector.

(b) Using an ohmmeter, measure the resistance between terminals +B and HT.

Resistance: 11 – 16 Ω at 20˚C (68˚F)

If the resistance is not as specified, replace the sensor.

Torque: 44 N·m (450 kgf·cm, 32 ft·lbf)

(c) Reconnect the oxygen sensor connector.

2. INSPECT OPERATION OF HEATED OXYGEN SENSOR (See page DI–66)

HEATED OXYGEN SENSOR (Bank 1 Sensor 2)

SF0EJ–03

COMPONENTS

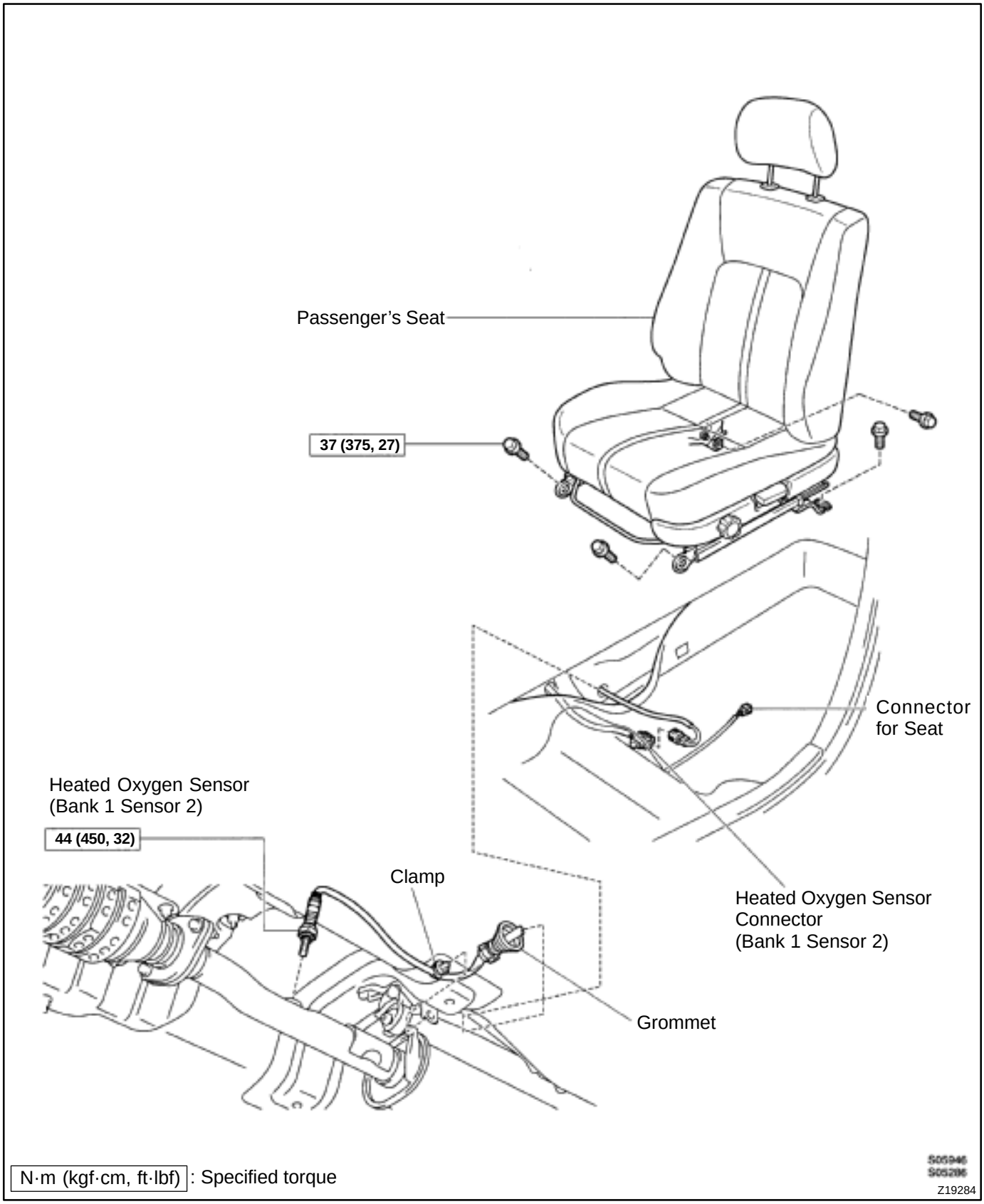

SF0EK–03

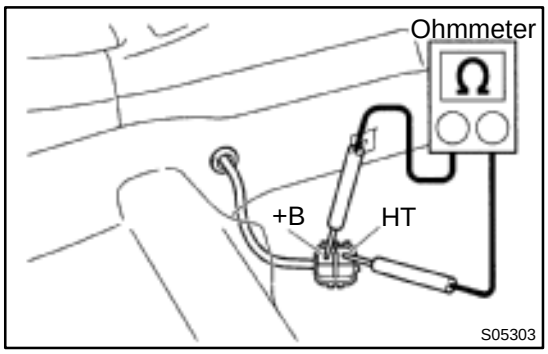

INSPECTION

1. INSPECT HEATER RESISTANCE OF HEATED OXYGEN SENSOR

(a) Disconnect the oxygen sensor connector.

(b) Using an ohmmeter, measure the resistance between terminals +B and HT.

Resistance: 11 – 16 Ω at 20˚C (68˚F)

If the resistance is not as specified, replace the sensor.

Torque: 44 N·m (450 kgf·cm, 32 ft·lbf)

(c) Reconnect the oxygen sensor connector.

2. INSPECT OPERATION OF HEATED OXYGEN SENSOR (See page DI–75)

ENGINE CONTROL MODULE (ECM)

SF0EL–03

COMPONENTS

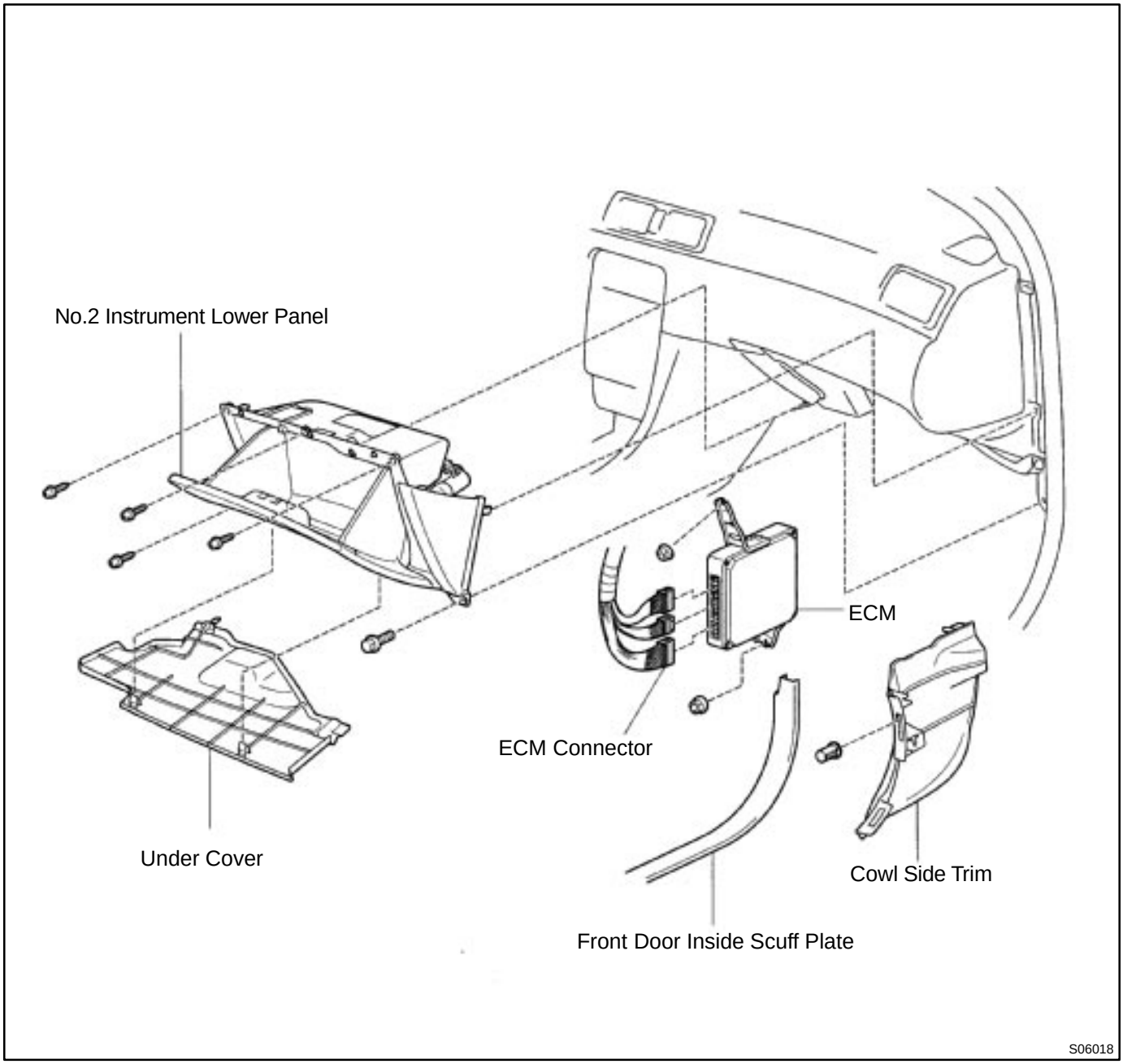

SF0EM–03

INSPECTION

1. REMOVE ECM
2. INSPECT ECM (See page DI–22)
3. REINSTALL ECM

FUEL CUT RPM

SF0EN–03

INSPECTION

1. WARM UP ENGINE

Allow the engine to warm up to normal operating temperature.

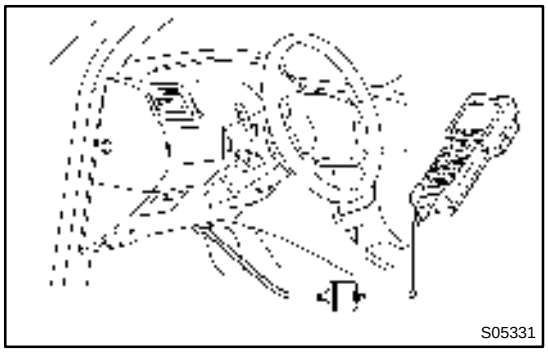

2. CONNECT TOYOTA HAND–HELD TESTER OR OBDII SCAN TOOL

(a) Remove the fuse cover on the instrument panel.
(b) Connect a TOYOTA hand–held tester or OBDII scan tool to the DLC3.
(c) Please refer to the TOYOTA hand–held tester or OBDII scan tool operator's manual for further details.

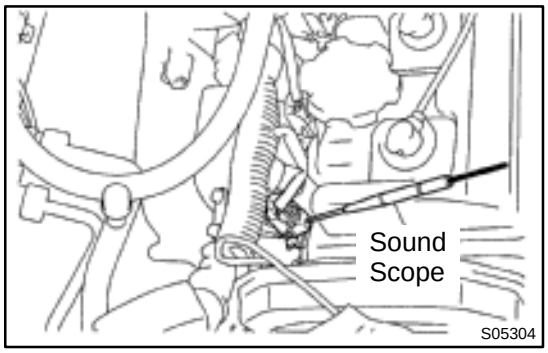

3. INSPECT FUEL CUT RPM OPERATION

(a) Increase the engine speed to at least 2,500 rpm.
(b) Check for injector operating noise.
(c) Check that when the throttle lever is released, injector operation noise stops momentarily and then resumes.

HINT:

Measure with the A/C OFF.

Fuel return speed: 1,500 rpm

4. DISCONNECT TOYOTA HAND–HELD TESTER OR OBDII SCAN TOOL

SFI SYSTEM

SF078–03

PRECAUTION

1. BEFORE WORKING ON FUEL SYSTEM, DISCONNECT NEGATIVE (–) TERMINAL CABLE FROM BATTERY

HINT:

Any diagnostic trouble code retained by the computer will be erased when the negative (–) terminal cable is removed from the battery.

Therefore, if necessary, read the diagnosis before removing the negative (–) terminal cable from the battery.

2. DO NOT SMOKE OR WORK NEAR AN OPEN FLAME WHEN WORKING ON FUEL SYSTEM

3. KEEP GASOLINE AWAY FROM RUBBER OR LEATHER PARTS

4. MAINTENANCE PRECAUTIONS

(a) In event of engine misfire, these precautions should be taken.
  (1) Check proper connection to battery terminals, etc.
  (2) After repair work, check that the ignition coil terminals and all other ignition system lines are reconnected securely.
  (3) When cleaning the engine compartment, be especially careful to protect the electrical system from water.

(b) Precautions when handling the oxygen sensor.
  (1) Do not allow the oxygen sensor to drop or hit against an object.
  (2) Do not allow the sensor to come into contact with water.

5. IF VEHICLE IS EQUIPPED WITH A MOBILE RADIO SYSTEM (HAM, CB, ETC.)

If the vehicle is equipped with a mobile communication system, refer to the precaution in the IN section.

6. AIR INDUCTION SYSTEM

(a) Separation of the engine oil dipstick, oil filler cap, PCV hose, etc. may cause the engine to run out of tune.

(b) Disconnection, looseness or cracks in the parts of the air induction system between the throttle body and cylinder head will allow air suction and cause the engine to run out of tune.

7. ELECTRONIC CONTROL SYSTEM

(a) Before removing SFI wiring connectors, terminals, etc., first disconnect the power by either turning the ignition switch to LOCK or disconnecting the negative (–) terminal cable from the battery.

HINT:

Always check the diagnostic trouble code before disconnecting the negative (–) terminal cable from the battery.

(b) When installing the battery, be especially careful not to incorrectly connect the positive (+) and negative (–) cables.
(c) Do not permit parts to receive a severe impact during removal or installation. Handle all SFI parts carefully, especially the ECM.
(d) Be careful during troubleshooting as there are numerous transistor circuit, and even slight terminal contact can cause further troubles.
(e) Do not open the ECM cover.
(f) When inspecting during rainy weather, take care to prevent entry of water. Also, when washing the engine compartment, prevent water from getting on the SFI parts and wiring connectors.
(g) Parts should be replaced as an assembly.
(h) Care should be taken when pulling out and inserting wiring connectors.
  (1) Release the lock and pull out the connector, pulling on the connectors.
  (2) Fully insert the connector and check that it is locked.

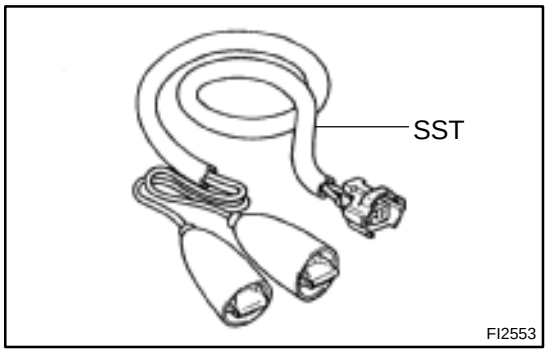

(i) Use SST for inspection or test of the injector or its wiring connector.
SST 09842–30070

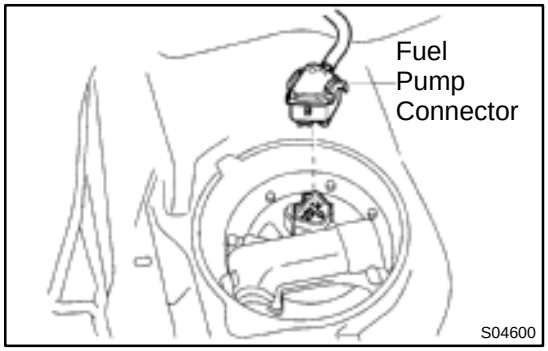

8. FUEL SYSTEM

(a) When disconnecting the high fuel pressure line, a large amount of gasoline will spill out, so observe these procedures:
  (1) Disconnect the fuel pump connector.
  (2) Start the engine. After the engine has stopped on its own, turn the ignition switch to LOCK.

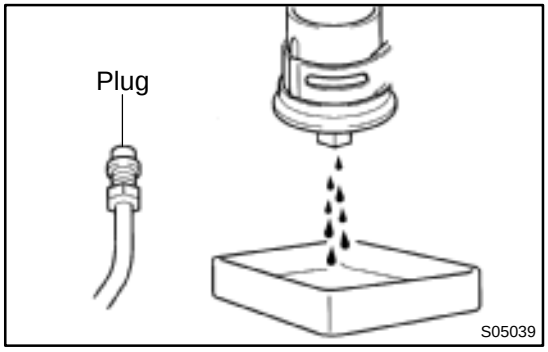

  (3) Put a container under the connection.
  (4) Slowly loosen the connection.
  (5) Disconnect the connection.
  (6) Plug the connection with a rubber plug.

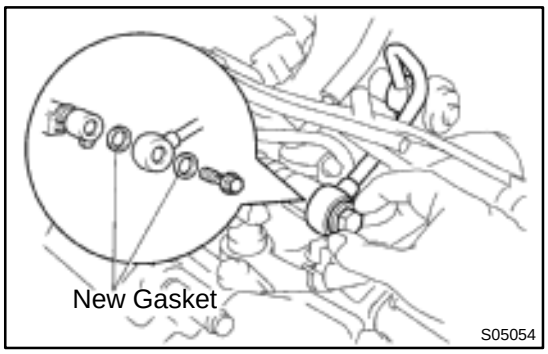

(b) When connecting the union bolt on the high pressure pipe union, observe these procedures:
(1) Always use 2 new gaskets.
(2) Tighten the union bolt by hand.
(3) Tighten the union bolt to the specified torque.
Torque: 32.5 N·m (330 kgf·cm, 24 ft·lbf)

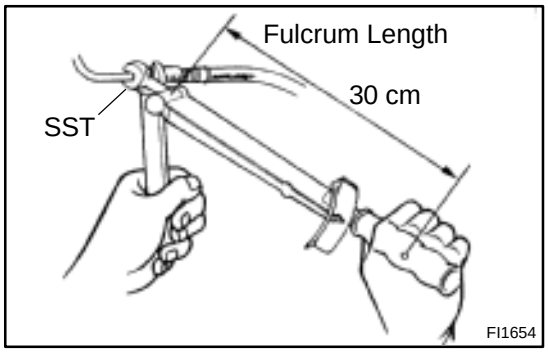

(c) When connecting the flare nut on the high pressure pipe union, observe these procedures:
(1) Apply a light coat of engine oil to the flare nut, and tighten the flare nut by hand.
(2) Using SST, tighten the flare nut to specified torque.
SST 09631–22020

NOTICE:
Do not rotate the fuel pipe, when tightening the flare nut.
Torque: 28 N·m (285 kgf·cm, 21 ft·lbf) for using SST
HINT:
Use a torque wrench with a fulcrum length of 30 cm (11.81 in.).

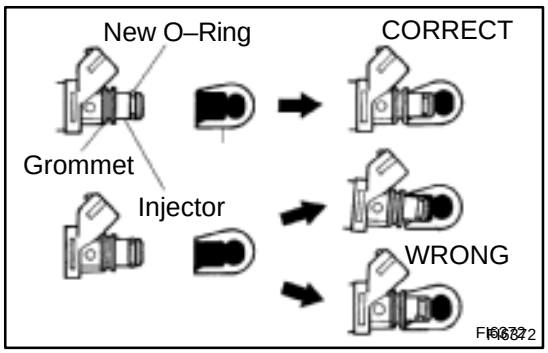

(d) Observe these precautions when removing and installing the injectors.
(1) Never reuse the O–ring.
(2) When placing a new O–ring on the injector, take care not to damage it in any way.
(3) Coat a new O–ring with spindle oil or gasoline before installing–never use engine, gear or brake oil.

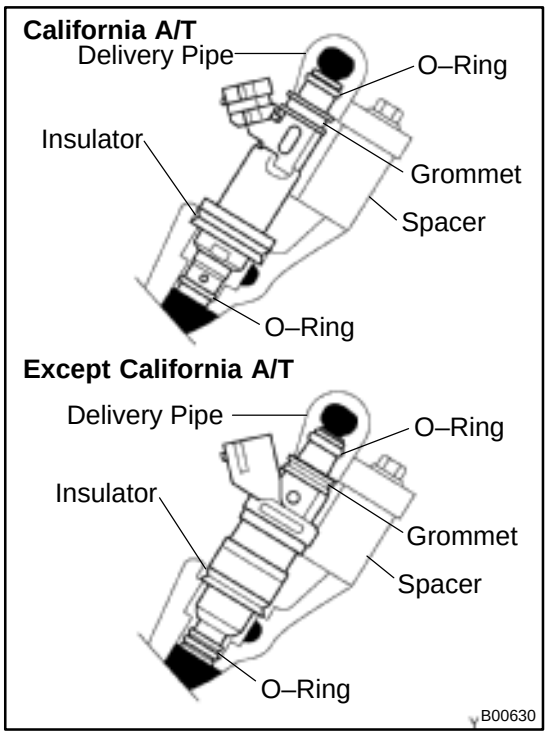

(e) Install the injector to the delivery pipe and intake manifold, as shown in the illustration.
Before installing the injector, must apply spindle oil or gasoline on the place where a delivery pipe or an intake manifold touches an O–ring of the injector.

(f) Observe these precautions when disconnecting the fuel tube connector (quick type).
(1) Check if there is any dirt like mud on the pipe and around the connector before disconnecting them and clean the dirt away.
(2) Be sure to disconnect with hands.

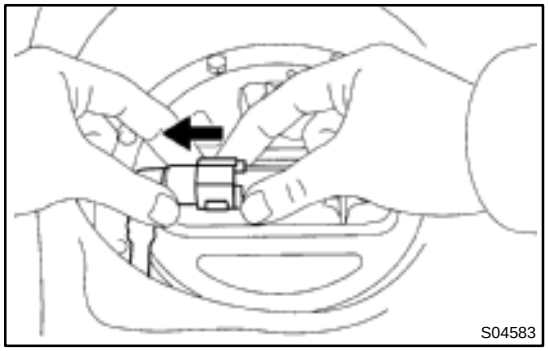

(3) When the connector and the pipe are stuck, pinch the retainer between the hands, push and pull the connector to free to disconnect and pull it out. Do not use any tool at this time.
(4) Inspect if there is any dirt or the likes on the seal surface of the disconnected pipe and clean it away.

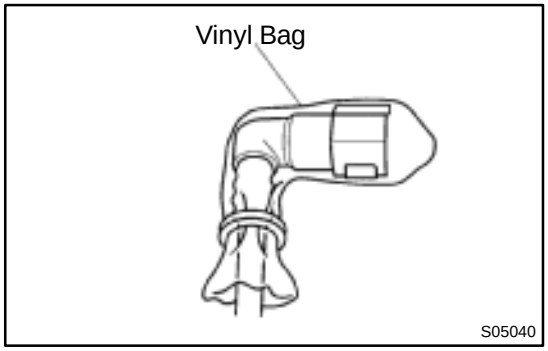

(5) Prevent the disconnected pipe and connector from damaging and mixing foreign objects by covering them with a vinyl bag.

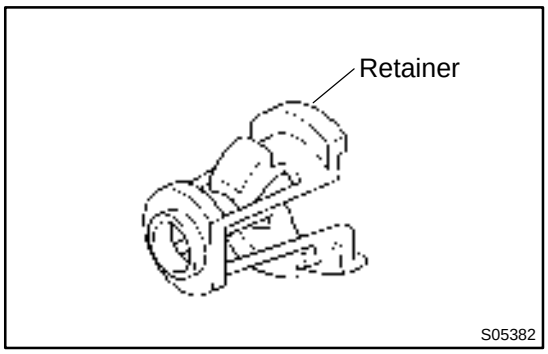

(g) Observe these precautions when connecting the fuel tube connector (quick type).
(1) Do not reuse the retainer removed from the pipe.
(2) Must use hands without using tools when to remove the retainer from the pipe.
(3) Check if there is any damage or foreign objects on the connected part of the pipe.

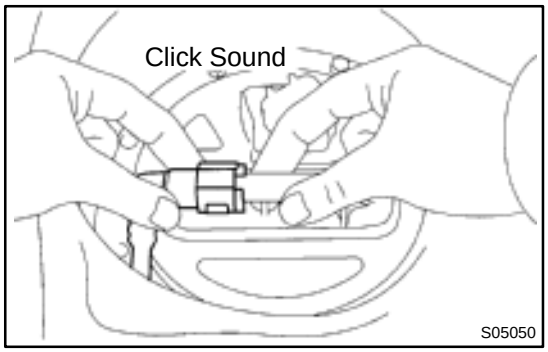

(4) Match the axis of the connector with axis of the pipe, and push in the connector until the retainer makes a ”click” sound. In case that the connections is tight, apply little amount of new engine oil on the tip of the pipe.
(5) After having finished the connection, check if the pipe and the connector are securely connected by pulling them.
(6) Check if there is any fuel leakage.

(h) Observe these precautions when handling nylon tube.
(1) Pay attention not to turn the connected part of the nylon tube and the quick connector with force when connecting them.
(2) Pay attention not to kink the nylon tube.
(3) Do not remove the EPDM protector on the outside of the nylon tube.
(4) Must not close the piping with the nylon tube by bending it.

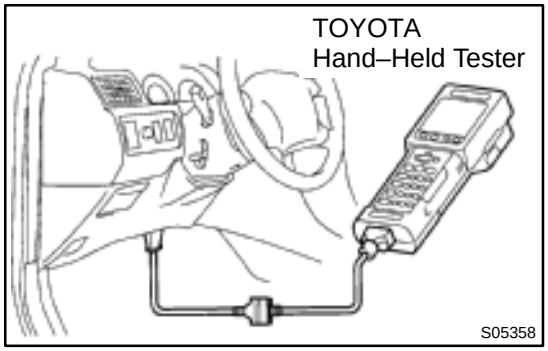

(i) Check that there are no fuel leaks after doing maintenance anywhere on the fuel system.
(1) Connect a TOYOTA hand–held tester to the DLC3.
(2) Turn the ignition switch ON and push the TOYOTA hand–held tester main switch ON.

NOTICE:
Do not start the engine.

(3) Select the active test mode on the TOYOTA hand–held tester.
(4) Please refer to the TOYOTA hand–held tester operator’s manual for further details.
(5) If you have no TOYOTA hand–held tester, connect the positive (+) and negative (–) leads from the battery to the fuel pump connector.
(See page SF–6)
(6) Check that there are no leaks from any part of the fuel system.
(7) Turn the ignition switch to LOCK.
(8) Disconnect the TOYOTA hand–held tester from the DLC3.

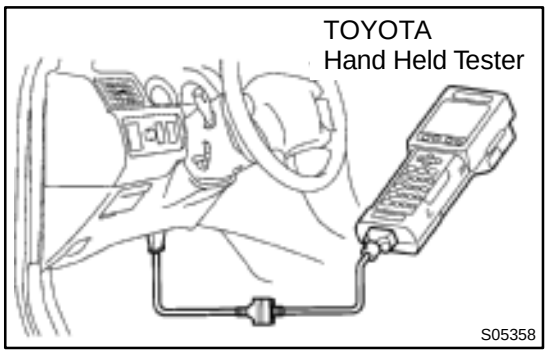

FUEL PUMP

SF079–04

ON–VEHICLE INSPECTION

1. CHECK FUEL PUMP OPERATION

(a) Connect a TOYOTA hand–held tester to the DLC3.

(b) Turn the ignition switch ON and push the TOYOTA hand–held tester main switch ON.

NOTICE:

Do not start the engine.

(c) Select the ACTIVE TEST mode on the TOYOTA hand–held tester.

(d) Please refer to the TOYOTA hand–held tester operator's manual for further details.

(e) If you have no TOYOTA hand–held tester, connect the positive (+) and negative (–) leads from the battery to the fuel pump connector. (See step 7)

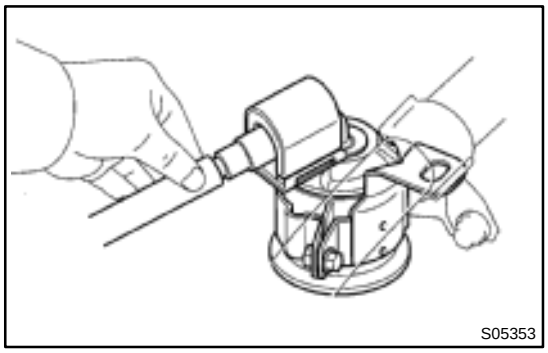

(f) Check that there is pressure in the fuel inlet hose from the fuel filter.

HINT:

If there is fuel pressure, you will hear the sound of fuel flowing.

If there is no pressure, check these parts:

Fusible link

Fuses

EFI main relay

Fuel pump

ECM

Wiring connections

(g) Turn the ignition switch OFF.

(h) Disconnect the TOYOTA hand–held tester from the DLC3.

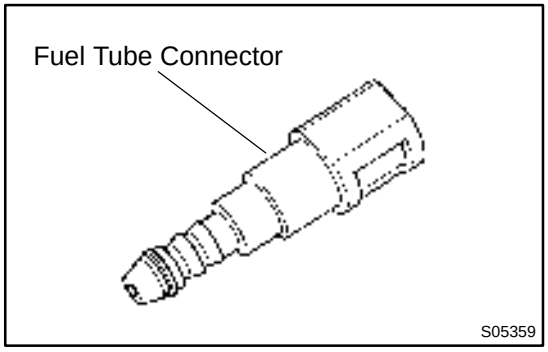

2. CHECK FUEL PRESSURE

(a) Check the battery positive voltage is above 12 V.

(b) Disconnect the negative (–) terminal cable from the battery.

(c) Purchase the new No.1 fuel pipe and take out the fuel tube connector from its pipe.
Part No. 23801–20041

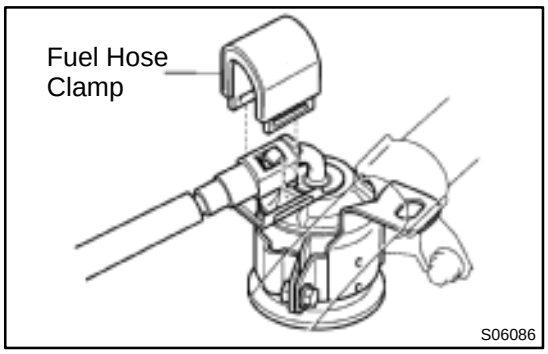

(d) Remove the fuel hose clamp.

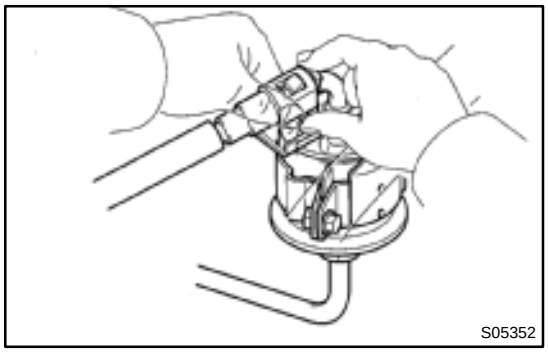

(e) Disconnect the No.1 fuel pipe (fuel tube connector) from the fuel filter outlet.

CAUTION:

- **Perform disconnecting operations of the fuel tube connector (quick type) after observing the precautions. (See page SF–1)**
- **As there is retained pressure in the fuel pipe line, prevent it from splashing inside the engine compartment.**

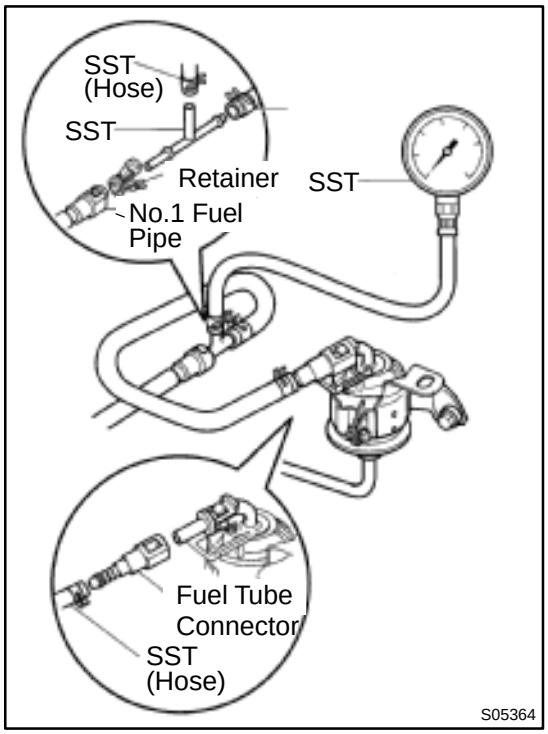

(f) Install SST (pressure gauge) as shown in the illustration by using SST and fuel tube connector.
SST 09268–41047, 09268–41250, 09268–45012

(g) Wipe off any splattered gasoline.

(h) Reconnect the negative (–) terminal cable to the battery.

(i) Connect the TOYOTA hand held tester to the DLC3.
(See step 1. check fuel pump operation (a) to (e))

(j) Measure the fuel pressure.
Fuel pressure:
301 – 347 kPa (3.1 – 3.5 kgf/cm^2, 44 – 50 psi)

If pressure is high, replace the fuel pressure regulator.
If pressure is low, check these parts:
Fuel hoses and connections
Fuel pump
Fuel filter
Fuel pressure regulator

(k) Disconnect the TOYOTA hand–held tester from the DLC3.

(l) Start the engine.

(m) Measure the fuel pressure at idle.
Fuel pressure:
301 – 347 kPa (3.1 – 3.5 kgf/cm^2, 44 – 50 psi)

(n) Stop the engine.

(o) Check that the fuel pressure remains as specified for 5 minutes after the engine has stopped.
Fuel pressure:
147 kPa (1.5 kgf/cm^2, 21 psi) or more

If pressure is not as specified, check the fuel pump, pressure regulator and/or injectors.

(p) After checking fuel pressure, disconnect the negative (–) terminal cable from the battery and carefully remove the SST and fuel tube connector to prevent gasoline from splashing.
SST 09268–41047, 09268–41250, 09268–45012

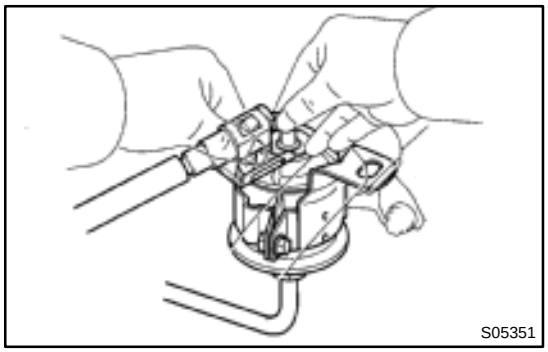

(q) Reconnect the No.1 fuel pipe (fuel tube connector).

CAUTION:
Perform connecting operations of the fuel tube connector (quick type) after observing the precautions.
(See page SF–1)

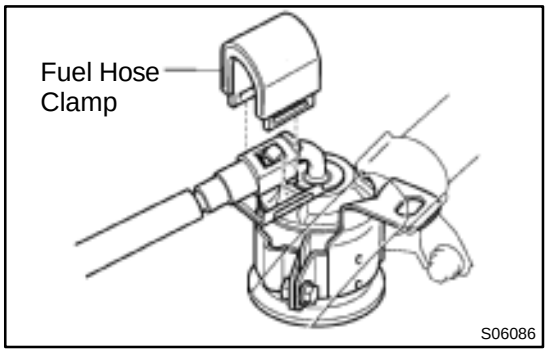

(r) Surely install the fuel hose clamp to the fuel filter with ”click” sound.
(s) After installing the clamp, check that the clamp is fixed by pulling up the clamp.
(t) Reconnect the negative (–) terminal cable to the battery.
(u) Check for fuel leaks.

3. REMOVE REAR SEAT CUSHION

4. REMOVE FLOOR SERVICE HOLE COVER

5. DISCONNECT FUEL PUMP & SENDER GAUGE CONNECTOR

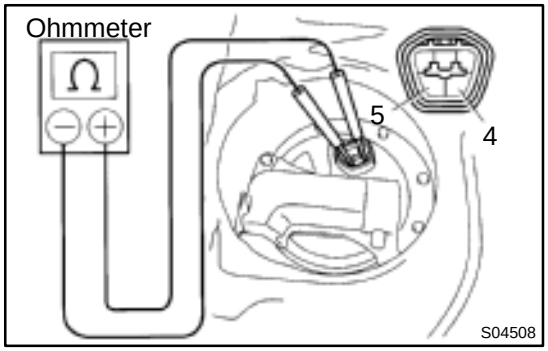

6. INSPECT FUEL PUMP RESISTANCE

Using an ohmmeter, measure the resistance between terminals 4 and 5.

Resistance: 0.2 – 3.0 Ω at 20˚C (68˚F)

If the resistance is not as specified, replace the fuel pump.

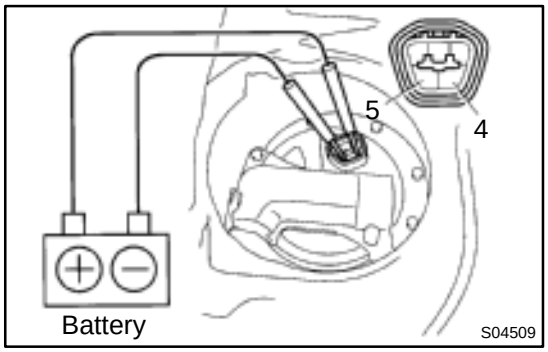

7. INSPECT FUEL PUMP OPERATION

Connect the positive (+) lead from the battery to terminal 4 of the connector, and the negative (–) lead to terminal 5. Check that the fuel pump operates.

NOTICE:

- **These tests must be done quickly (within 10 seconds) to prevent the coil burning out.**
- **Keep the fuel pump as far away from the battery as possible.**
- **Always do the switching at the battery side.**

If operation is not as specified, replace the fuel pump or lead wire.

8. **RECONNECT FUEL PUMP & SENDER GAUGE CONNECTOR**
9. **REINSTALL FLOOR SERVICE HOLE COVER**
10. **REINSTALL REAR SEAT CUSHION**

SF07A–02

COMPONENTS

Type A

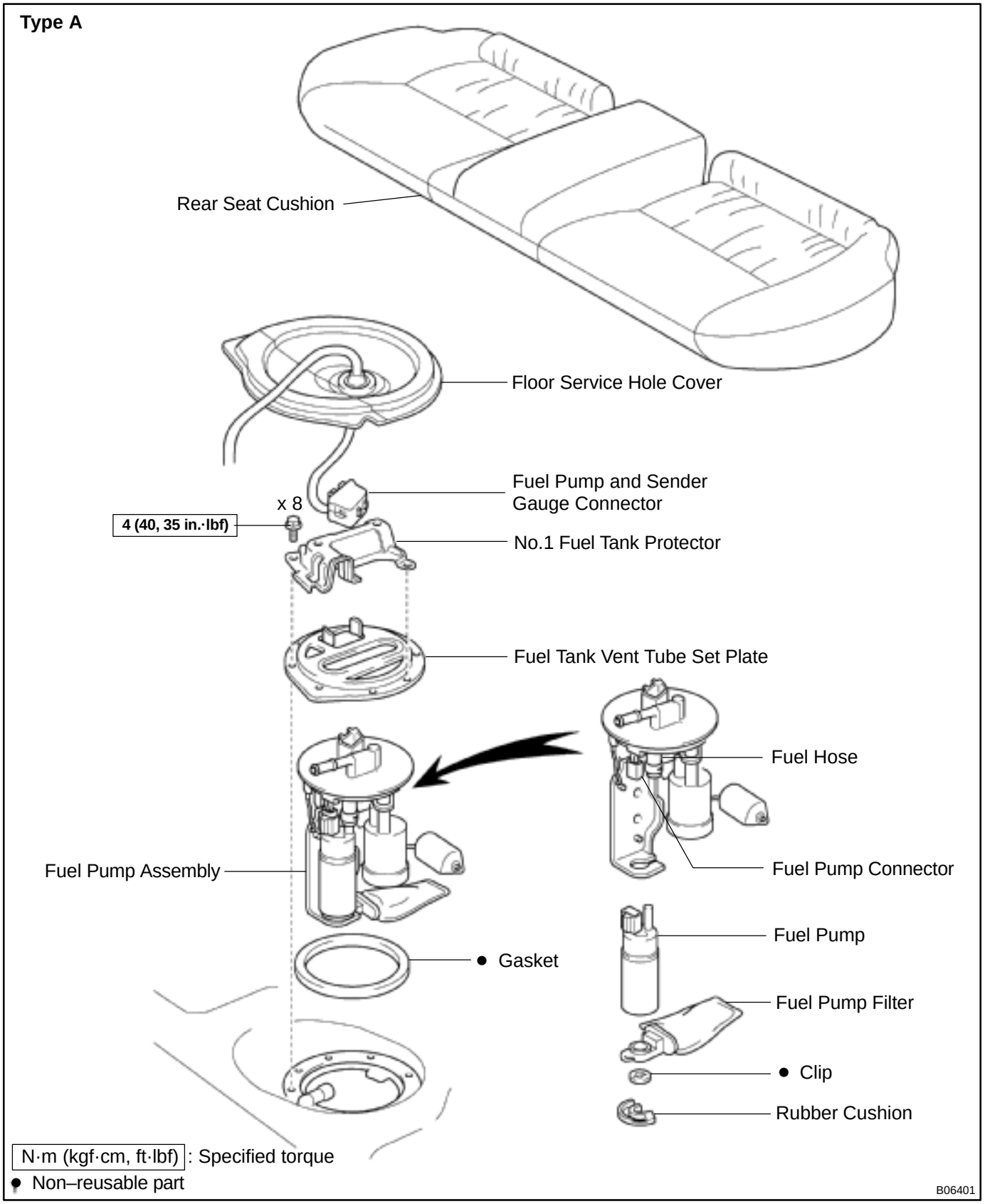

N·m (kgf·cm, ft·lbf) : Specified torque

● Non–reusable part

B06401

Type B

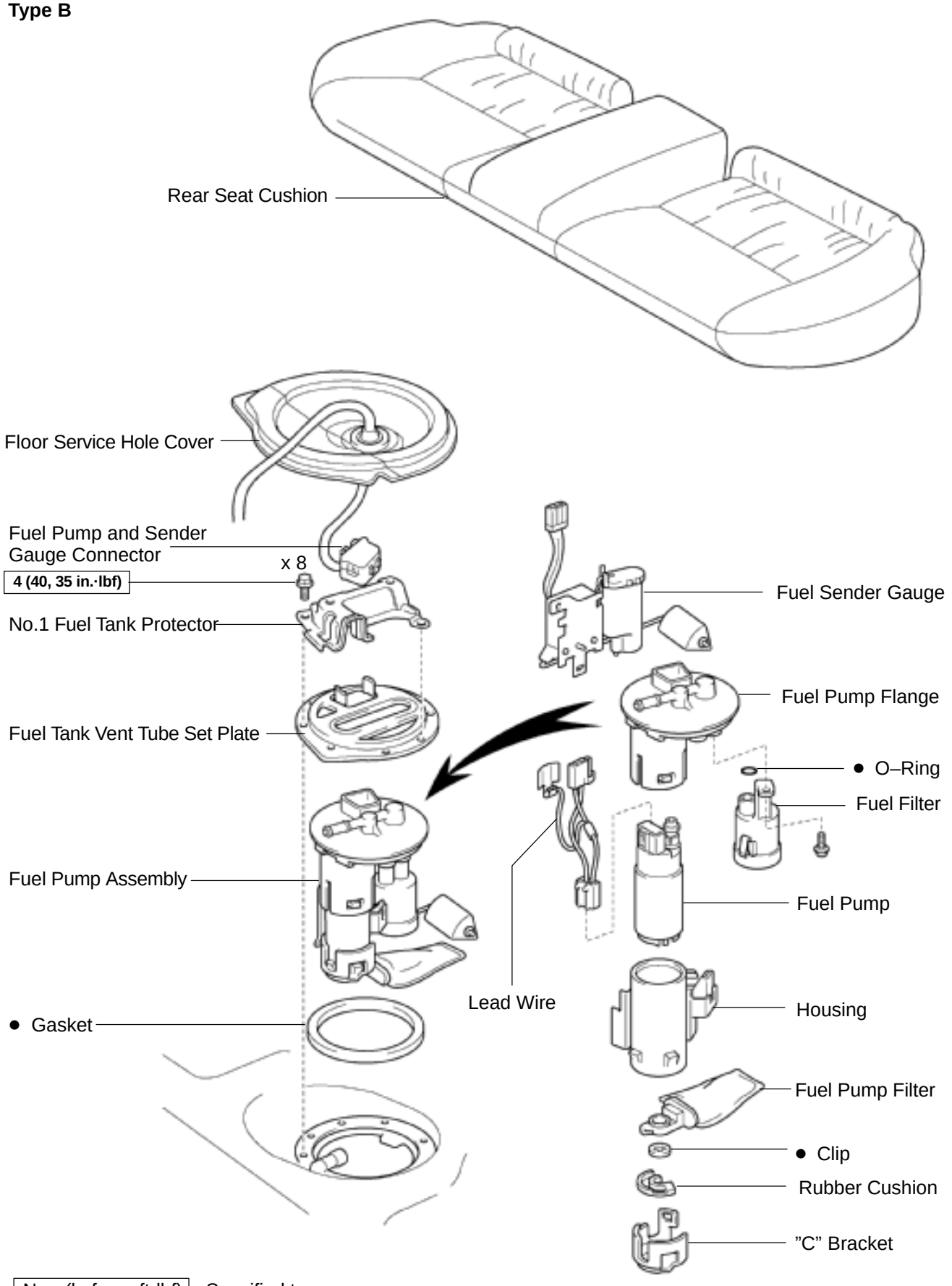

N·m (kgf·cm, ft·lbf) : Specified torque
● Non–reusable part

B06394

SF07B–04

REMOVAL

CAUTION:

Do not smoke or work near an open flame when working on the fuel pump.

1. REMOVE REAR SEAT CUSHION

2. REMOVE FLOOR SERVICE HOLE COVER

(a) Take out the floor carpet.

(b) Remove the service hole cover.

HINT:

At the time of installation, plaese refer to the following items. Check for fuel leakage.

3. DISCONNECT FUEL PUMP & SENDER GAUGE CONNECTOR

4. REMOVE NO.1 FUEL TANK PROTECTOR

Remove the 2 bolts and No.1 fuel tank protector.

Torque: 4 N·m (40 kgf·cm, 35 in.·lbf)

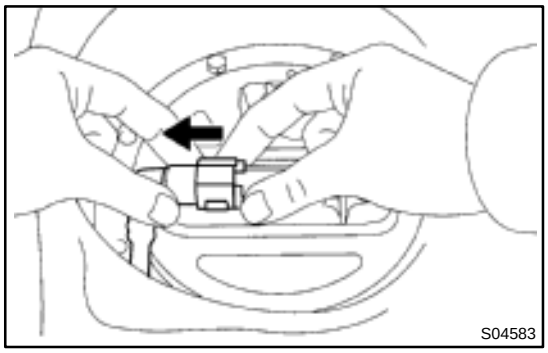

5. DISCONNECT FUEL TUBE (FUEL TUBE CONNECTOR)

CAUTION:

- **Perform disconnecting and connecting operations of the fuel tube connector (quick type) after observing the precautions. (See page SF–1)**
- **As there is retained pressure in the fuel pipe line, prevent it from splashing inside the vehicle compartment.**

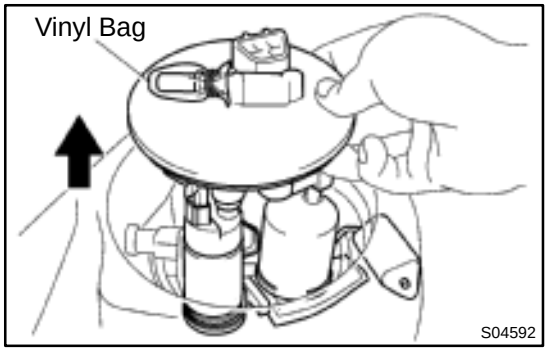

6. REMOVE FUEL PUMP ASSEMBLY FROM FUEL TANK

(a) Remove the 6 bolts and fuel tank vent tube set plate.
Torque: 4 N·m (40 kgf·cm, 35 in.·lbf)

(b) Pull out the fuel pump assembly.

(c) Remove the gasket from the pump assembly.

NOTICE:

- **Do not damage the fuel pump filter.**
- **Be careful that the arm of the sender gauge should not bent.**

HINT:

At the time of installation, plaese refer to the following items. Install a new gasket to the pump assembly.

SF07C–03

DISASSEMBLY

1. DISCONNECT FUEL PUMP CONNECTOR

2. TYPE B:
DISCONNECT GROUND PLATE

3. TYPE B:
DISCONNECT FUEL SENDER GAUGE CONNECTOR

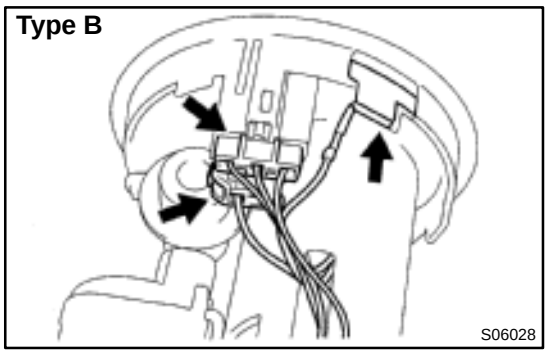

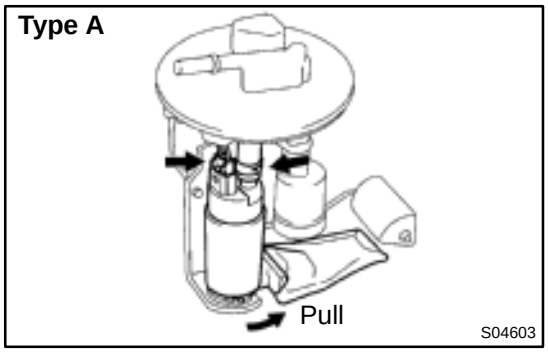

4. Type A:
REMOVE FUEL PUMP FROM FUEL PUMP BRACKET

(a) Pull off the lower side of the fuel pump from the pump bracket.

(b) Disconnect the fuel hose from the fuel pump, and remove the fuel pump.

(c) Remove the rubber cushion from the fuel pump.

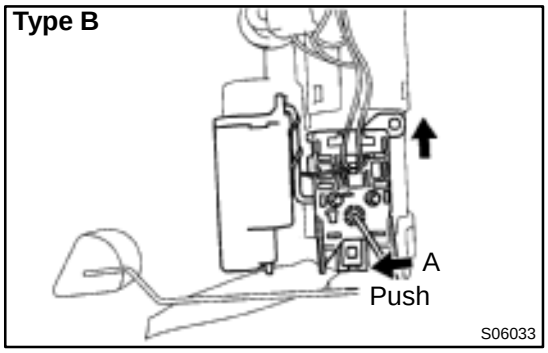

5. Type B:
REMOVE FUEL SENDER GAUGE

Push down the portion of A with a finger, and push up the sender gauge.

NOTICE:

Be careful that the arm of the sender gauge should not bent.

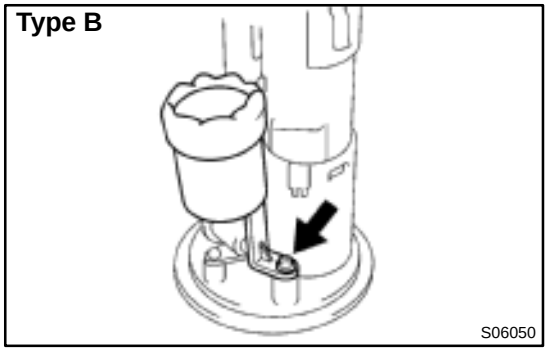

6. Type B:
REMOVE FUEL FILTER

(a) Remove the screw, and pull out the fuel filter.

(b) Remove the O–ring from the fuel filter.

HINT:

At the time of installation, please refer to the following items. Install the pump filter with a new clip.

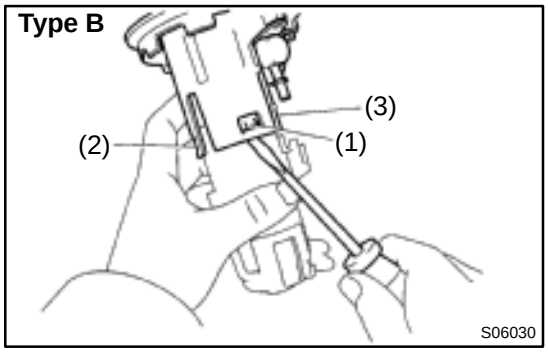

7. TYPE B:
REMOVE FUEL PUMP FLANGE

Using a screwdriver, remove the snap fit portion in the order of 1, 2 and 3 as shown in the illustration.

HINT:

At the time of installation, please refer to the following items. Apply a light coat of gasoline to a new O–ring, and install it to the fuel filter.

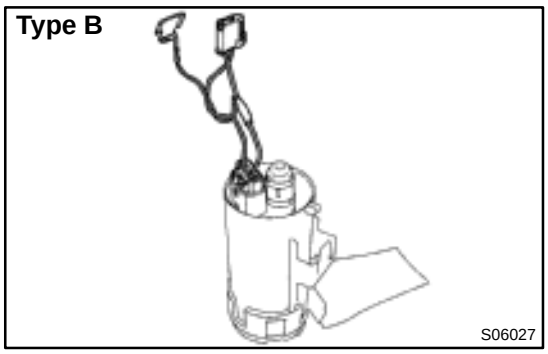

8. Type B:
REMOVE FUEL PUMP LEAD WIRE

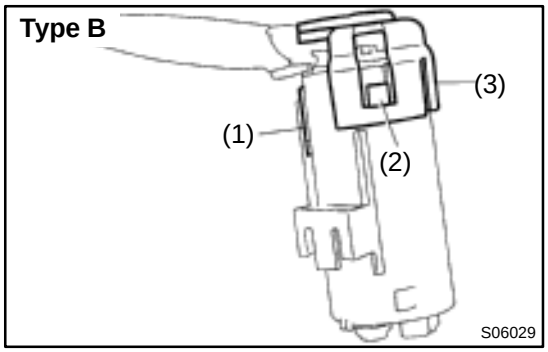

9. Type B:
REMOVE ”C” BRACKET, RUBBER CUSHION AND FUEL PUMP

Using a screwdriver, remove the snap fit portion in the order of 1, 2 and 3 as shown in the illustration.

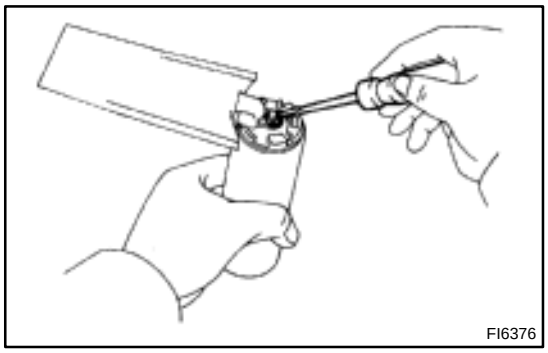

10. REMOVE FUEL PUMP FILTER FROM FUEL PUMP

(a) Using a small screwdriver, remove the clip.

(b) Pull out the pump filter.

HINT:

At the time of installation, please refer to the following items. Install the pump filter with a new clip.

SF07D–01

REASSEMBLY

Reassembly is in the reverse order of disassembly. (See page SF–13)

SF07E–01

INSTALLATION

Installation is in the reverse order of removal. (See page SF–12)

FUEL PRESSURE REGULATOR

SF07F–03

COMPONENTS

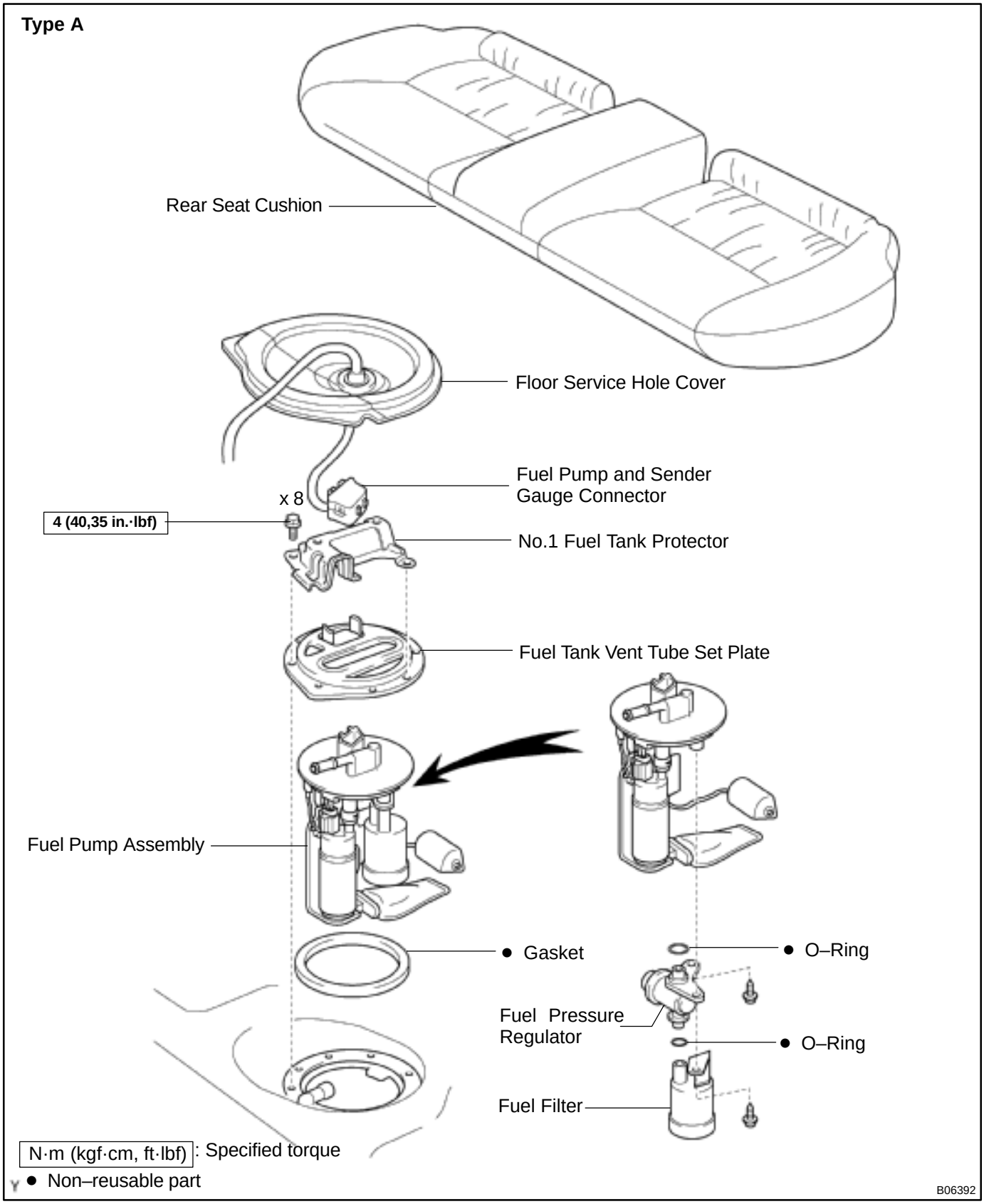

Type B

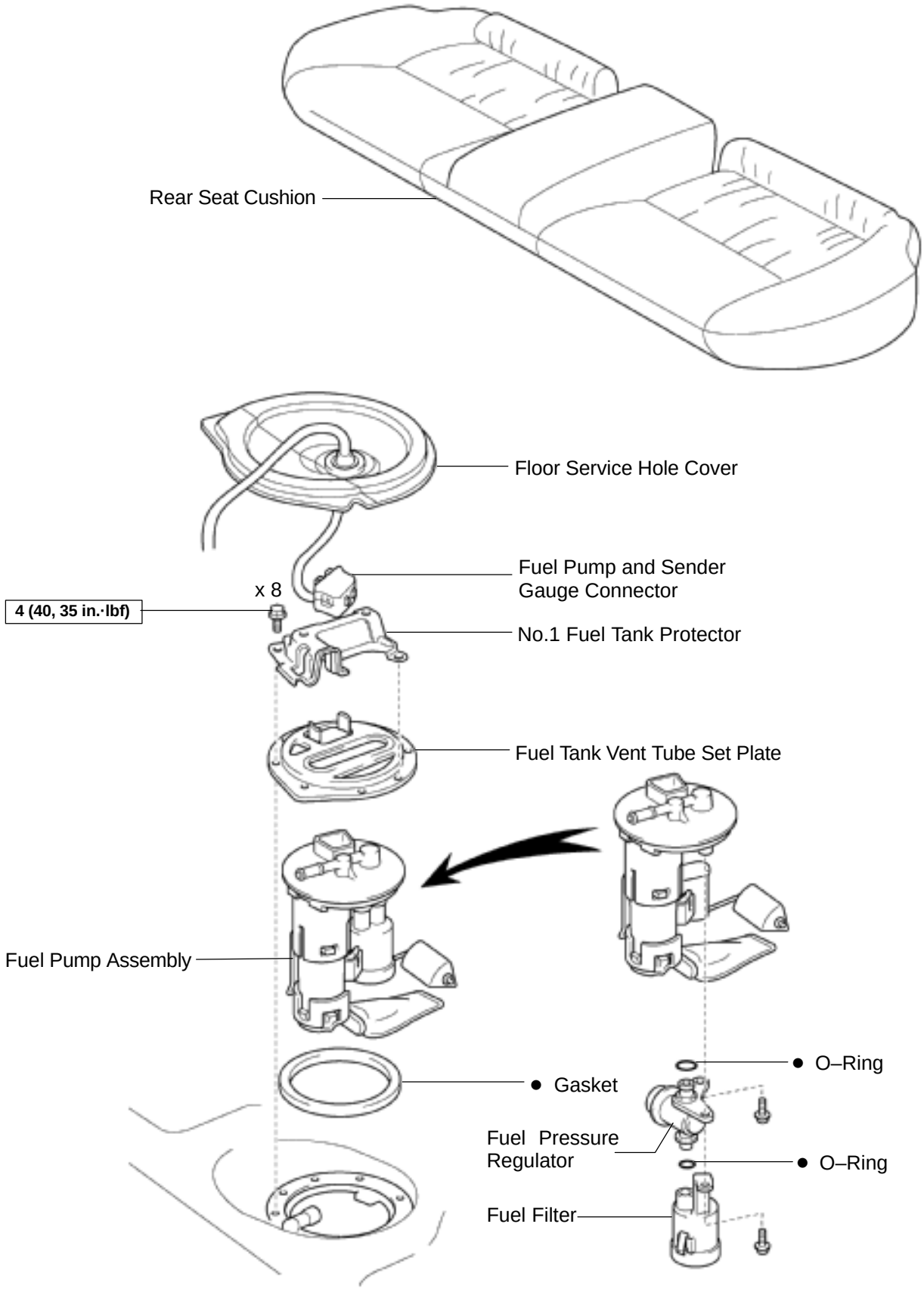

N·m (kgf·cm, ft·lbf): Specified torque

● Non–reusable part

B06393

SF07G–03

REMOVAL

1. REMOVE FUEL PUMP ASSEMBLY FROM FUEL TANK
(See page SF–12)

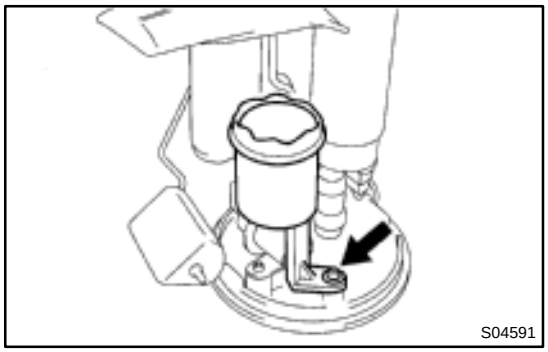

2. REMOVE FUEL FILTER

(a) Remove the screw, and pull out the fuel filter.
Torque: 2.0 N·m (20 kgf·cm, 17 in.·lbf)

(b) Remove the O–ring from the fuel filter.

HINT:

At the time of installation, please refer to the following items.
Apply a light coat of gasoline to a new O–ring, and install it to the fuel filter.

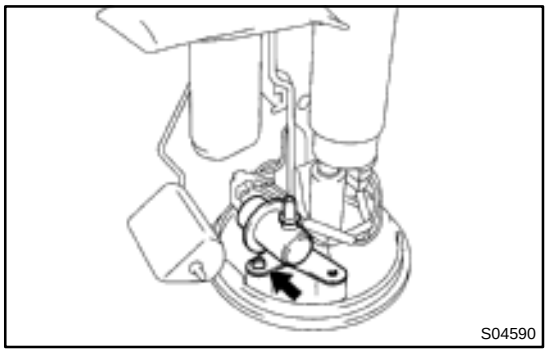

3. REMOVE FUEL PRESSURE REGULATOR

(a) Remove the screw, and pull out the pressure regulator.
Torque: 2.0 N·m (20 kgf·cm, 17 in.·lbf)

(b) Remove the O–ring from the pressure regulator.

HINT:

At the time of installation, please refer to the following items.
Apply a light coat of gasoline to a new O–ring, and install it to the pressure regulator.

SF07H–01

INSTALLATION

Installation is in the reverse order of removal. (See page SF–19)

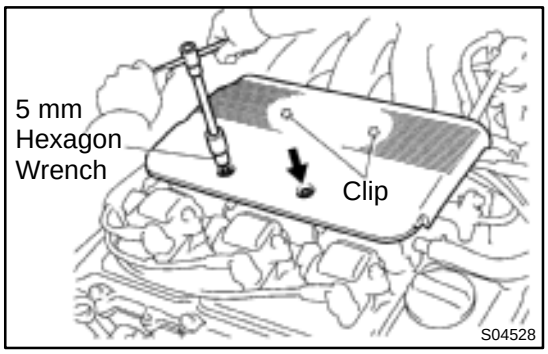

INJECTOR

SF07I–03

ON–VEHICLE INSPECTION

1. REMOVE V–BANK COVER

(a) Using a 5 mm hexagon wrench, remove the 2 cap nuts.
(b) Disconnect the 2 clips, and remove the V–bank cover.

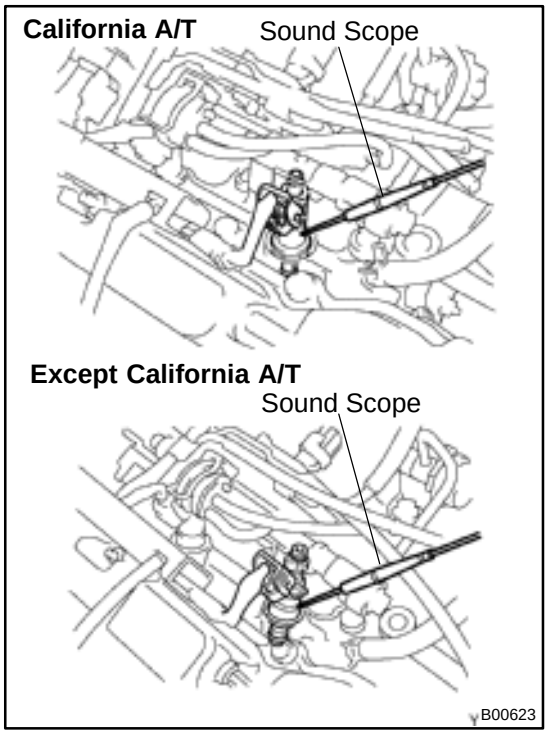

2. INSPECT INJECTOR OPERATION

Check operation sound from each injector.

(1) With the engine running or cranking, use a sound scope to check that there is normal operating noise in proportion to engine speed.
(2) If you have no sound scope, you can check the injector operating vibration with your finger.

If no sound or unusual sound is heard, check the wiring connector, injector or injection signal from the ECM.

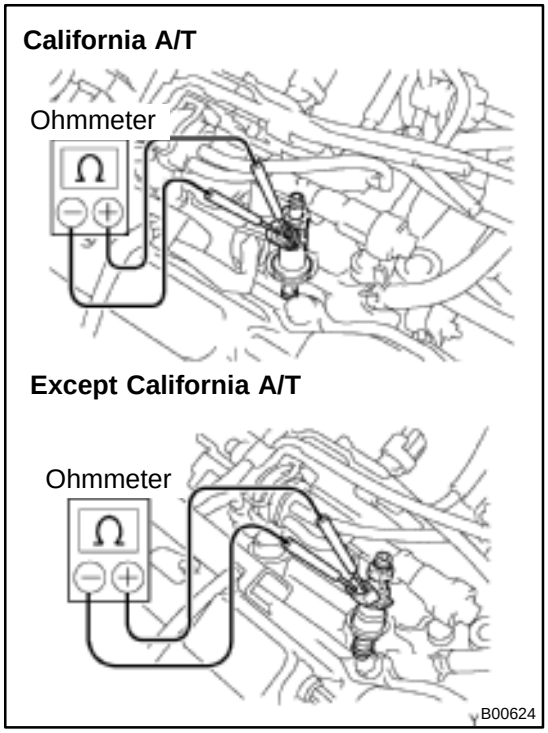

3. INSPECT INJECTOR RESISTANCE

(a) Disconnect the injector connector.
(b) Using an ohmmeter, measure the resistance between the terminals.

Resistance: 13.4 – 14.2 Ω at 20°C (68°F)

If the resistance is not as specified, replace the injector.
(c) Reconnect the injector connector.

4. REINSTALL V–BANK COVER

HINT:

For fixing the V–bank cover, push on the cover until a ”click” is felt.

SF07J–03

COMPONENTS

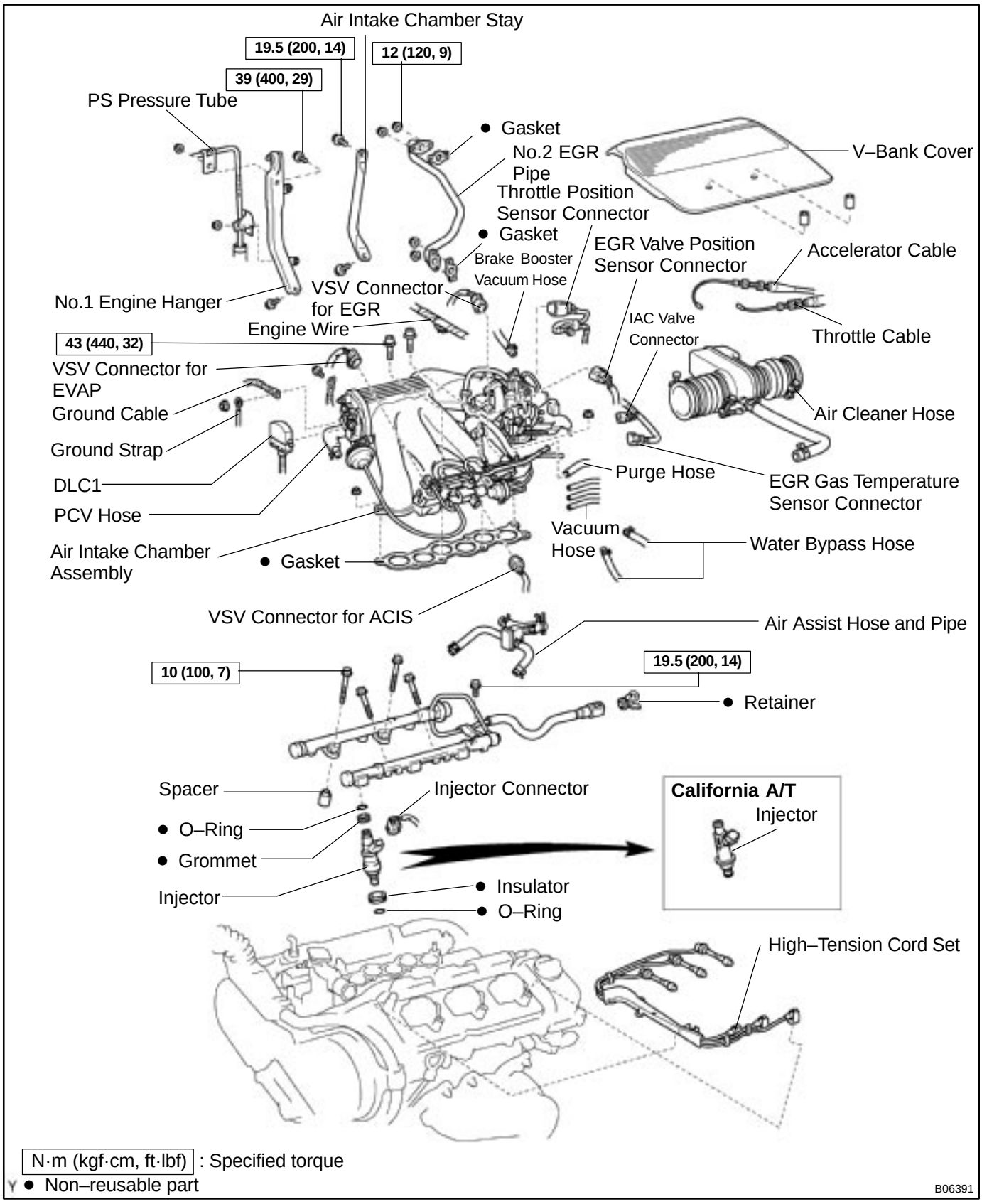

SF07K–04

REMOVAL

1. **REMOVE AIR CLEANER HOSE**
2. **REMOVE AIR INTAKE CHAMBER ASSEMBLY (See page EM–32)**

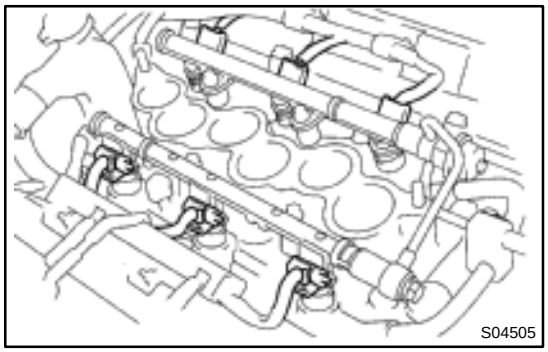

3. **DISCONNECT INJECTOR CONNECTORS**

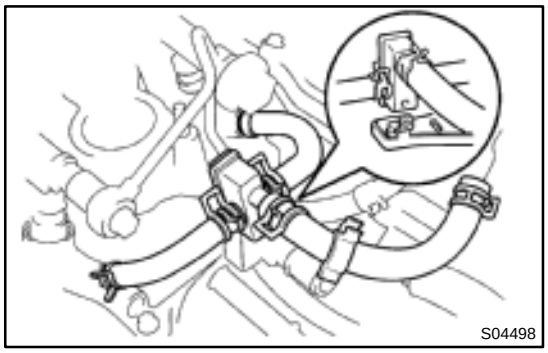

4. **REMOVE AIR ASSIST HOSES AND PIPE**

(a) Disconnect the air assist pipe from the bracket on the No.1 fuel pipe.

(b) Remove the air assist hoses from the intake manifold.

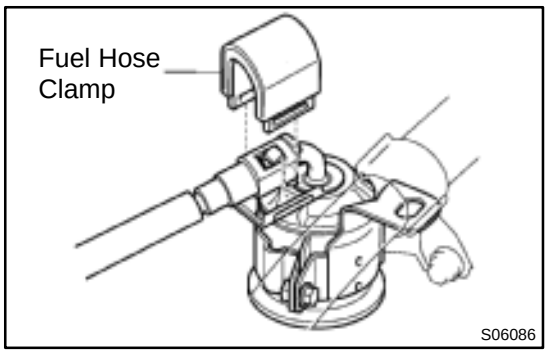

5. **DISCONNECT NO.1 FUEL PIPE**

(a) Remove the fuel hose clamp.

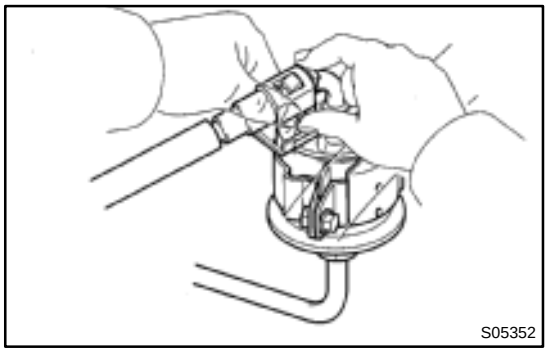

(b) Disconnect the No.1 fuel pipe (fuel tube connector) from the fuel filter outlet.

CAUTION:

- **Perform disconnecting operations of the fuel tube connector (quick type) after observing the precautions. (See page SF–1)**
- **As there is retained pressure in the fuel pipe line, prevent it from splashing inside the engine compartment.**

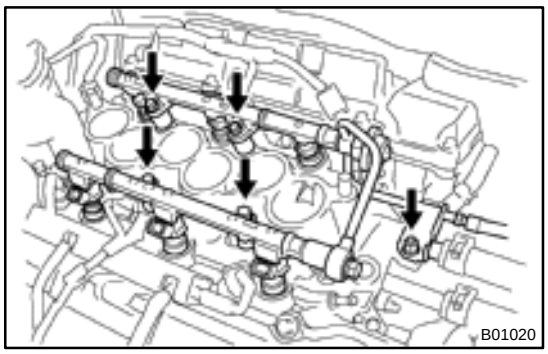

6. REMOVE DELIVERY PIPES AND INJECTORS

NOTICE:

- **Be careful not to drop the injectors when removing the delivery pipes.**
- **Pay attention to put any hung load on the injector to and from the side direction.**

(a) Remove the 5 bolts and delivery pipes together with the 6 injectors and No.1 fuel pipe.

(b) Remove the 4 spacers from the intake manifold.

(c) Pull out the 6 injectors from the delivery pipes.

(d) Remove the 2 O–rings and 2 grommets from each injector.

SF07L–04

INSPECTION

1. INSPECT INJECTOR INJECTION

CAUTION:

Keep injector clear of sparks during the test.

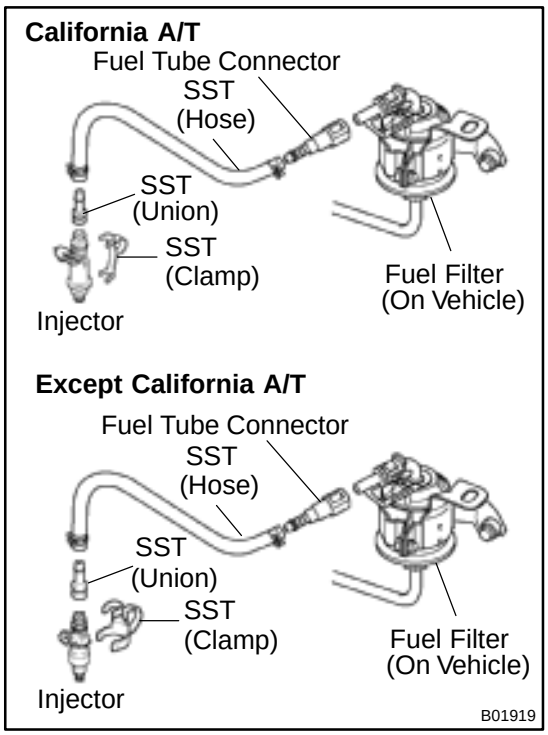

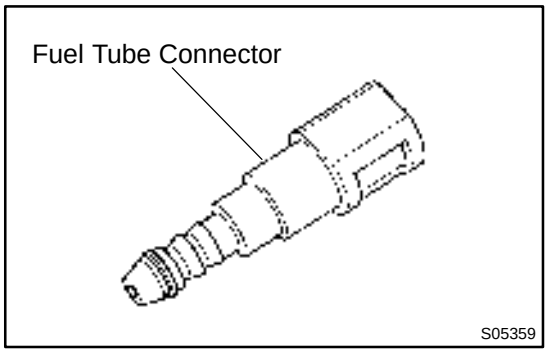

(a) Purchase the new No.1 fuel pipe and take out the fuel tube connector from its pipe.
Part No. 23801–20041

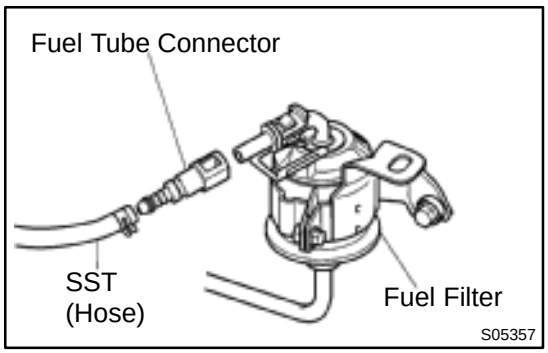

(b) Connect SST (hose) and fuel tube connector to the fuel filter outlet.
SST 09268–41047

CAUTION:

Preform connecting operations of the fuel tube connector (quick type) after observing the precautions.
(See page SF–1)

HINT:

Use the vehicle fuel filter.

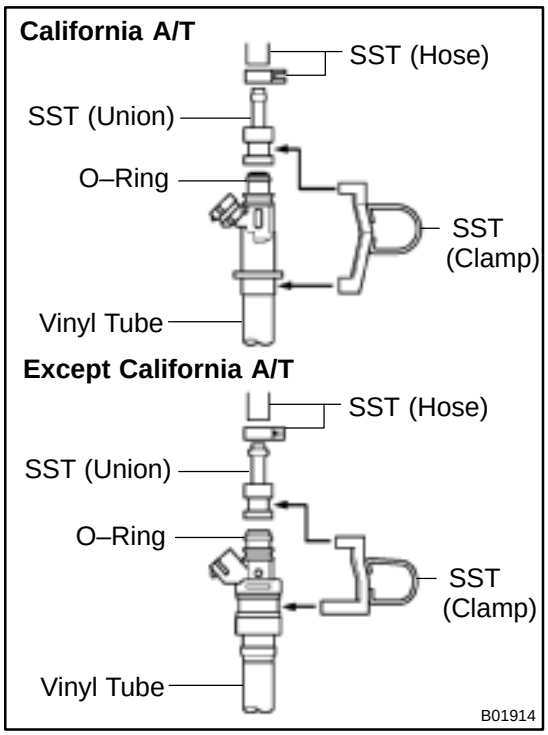

(c) Install the grommet and O–Ring to the injector.
(d) Connect SST (union and hose) to the injector, and hold the injector and union with SST (clamp).
SST 09268–41047
(e) Put the injector into a graduated cylinder.

HINT:
Install a suitable vinyl hose onto the injector to prevent gasoline from splashing out.

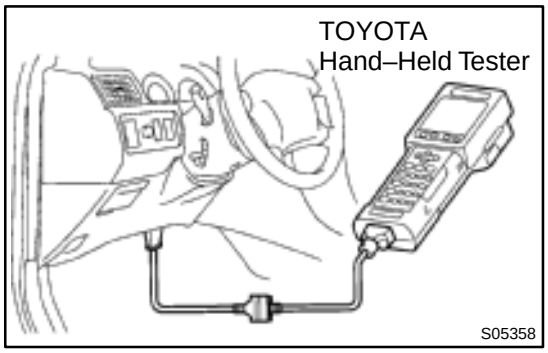

(f) Connect a TOYOTA hand–held tester to the DLC3.
(g) Turn the ignition switch ON and push the TOYOTA hand–held tester main switch ON.

NOTICE:
Do not start the engine.

(h) Select the ACTIVE TEST mode on the TOYOTA hand–held tester.
(i) Please refer to the TOYOTA hand–held tester operator's manual for further details.
(j) If you have no TOYOTA hand–held tester, connect the positive (+) and negative (–) leads from the battery to the fuel pump connector. (See page SF–6)

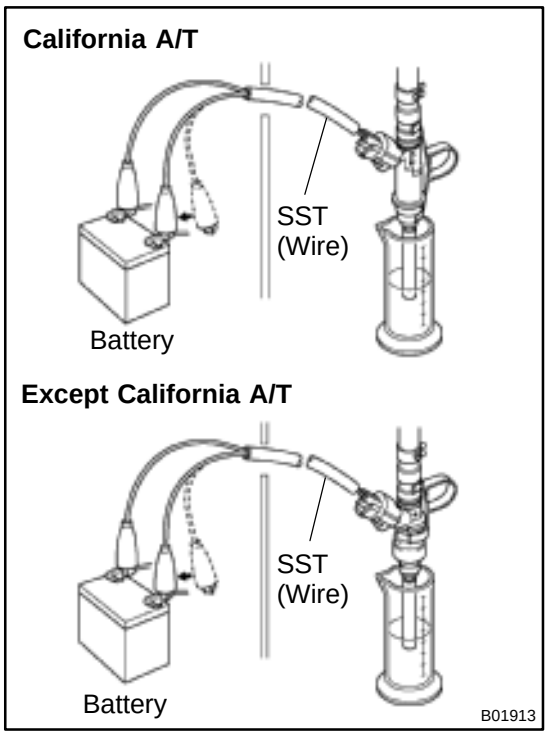

(k) Connect SST (wire) to the injector and battery for 15 seconds, and measure the injection volume with a graduated cylinder. Test each injector 2 or 3 times.
SST 09842–30070
Volume:
60 – 73 cm^3 (3.4 – 4.5 cu in.) per 15 sec.
Difference between each injector:
13 cm^3 (0.8 cu in.) or less

If the injection volume is not as specified, replace the injector.

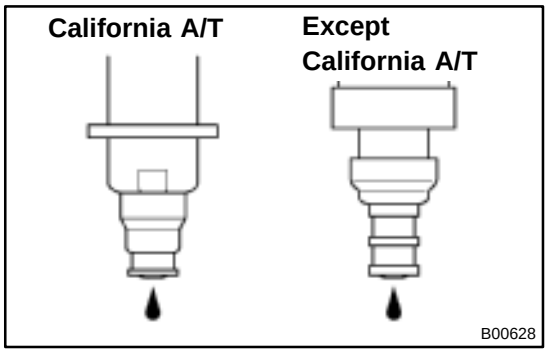

2. INSPECT LEAKAGE

(a) In the condition above, disconnect the test probes of SST (wire) from the battery and check the fuel leakage from the injector.
SST 09842–30070
Fuel drop: 1 drop or less per 12 minutes

(b) Turn the ignition switch OFF.

(c) Disconnect the negative (–) terminal cable from the battery.

(d) Remove the SST and fuel tube connector.
SST 09268–41047, 09842–30070

CAUTION:
- **Perform disconnecting operations of the fuel tube connector (quick type) after observing the precautions. (See page SF–1)**
- **As there is retained pressure in the fuel pipe line, prevent it from splashing inside the engine compartment.**

(e) Disconnect the TOYOTA hand–held tester from the DLC3.

SF07M–04

INSTALLATION

1. INSTALL INJECTORS AND DELIVERY PIPES

(a) Install new insulator and grommet to each injector.

(b) Apply a light coat of spindle oil or gasoline to 2 new O–rings and install them to each injector.

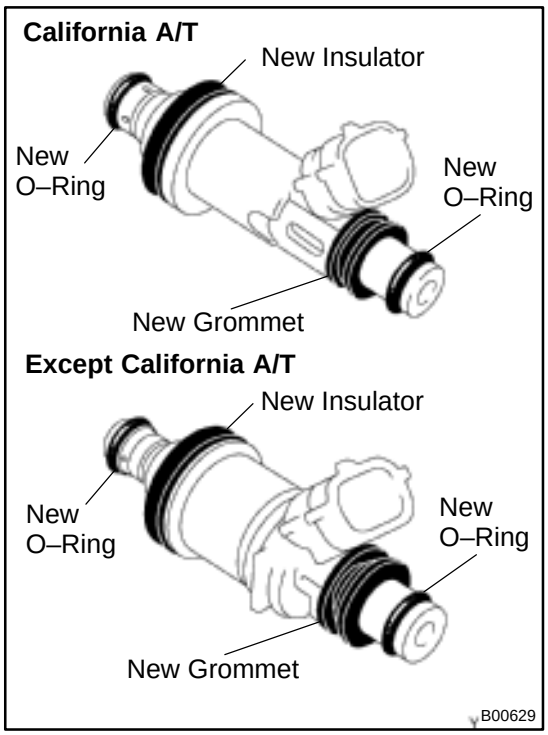

(c) Apply a light coat of spindle oil or gasoline on the place where a delivery pipe touches an O–ring of the injector.

(d) While turning the injector clockwise and counterclockwise, push it to the delivery pipes. Install the 6 injectors.

(e) Position the injector connector outward.

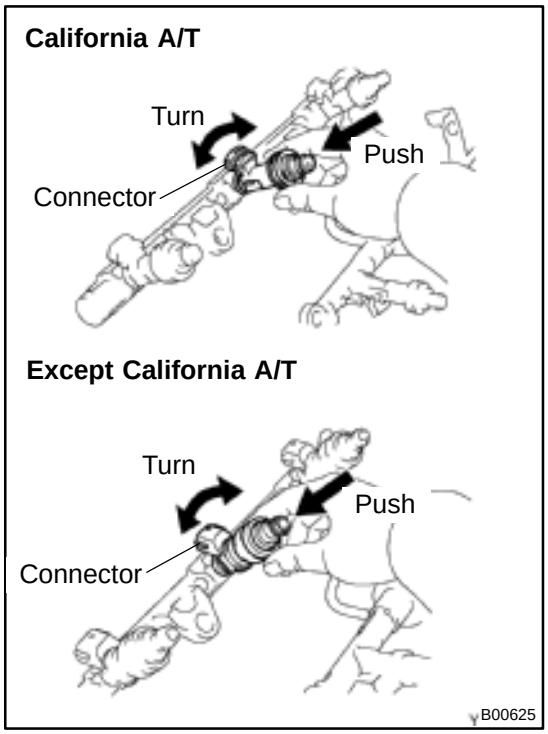

(f) Place the 4 spacers in position on the intake manifold.

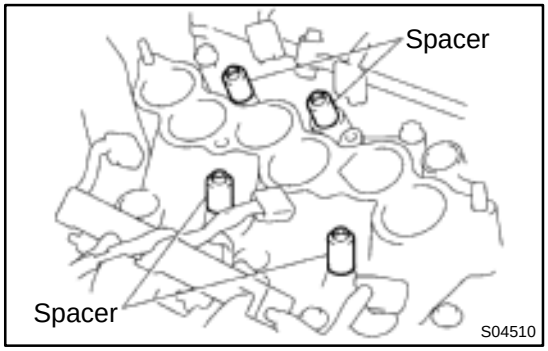

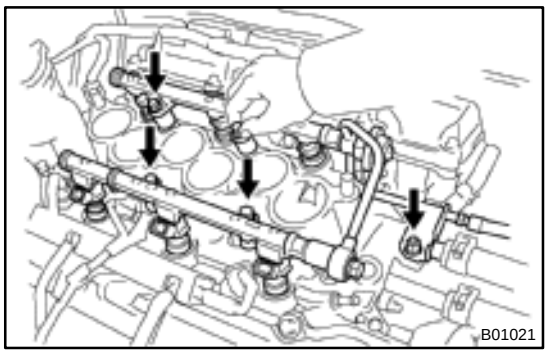

(g) Apply a light coat of spindle oil or gasoline on the place where a intake manifold touches an O–ring of the injector.
(h) Place the delivery pipes and fuel pipe together with the 6 injectors in position on the intake manifold.
(i) Temporarily install the 4 bolts holding the delivery pipes to the intake manifold.
(j) Temporarily install the bolt holding the No.1 fuel pipe to the intake manifold.

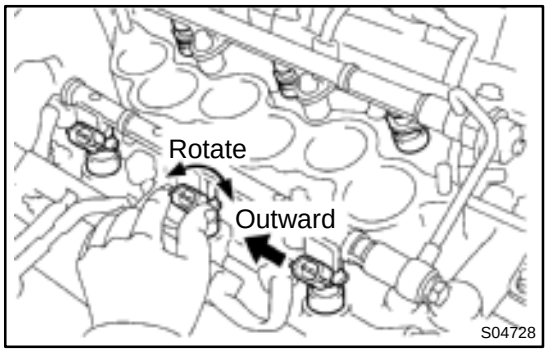

(k) Check that the injectors rotate smoothly.

HINT:

If injectors do not rotate smoothly, the probable cause is incorrect installation of O–rings. Replace the O–rings.

(l) Position the injector connector outward.

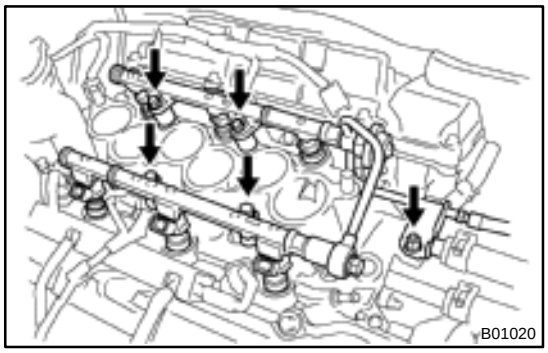

(m) Tighten the 4 bolts holding the delivery pipes to the intake manifold.
Torque: 10 N·m (100 kgf·cm, 7 ft·lbf)
(n) Tighten the bolt holding the No.1 fuel pipe to the intake manifold.
Torque: 19.5 N·m (200 kgf·cm, 14 ft·lbf)

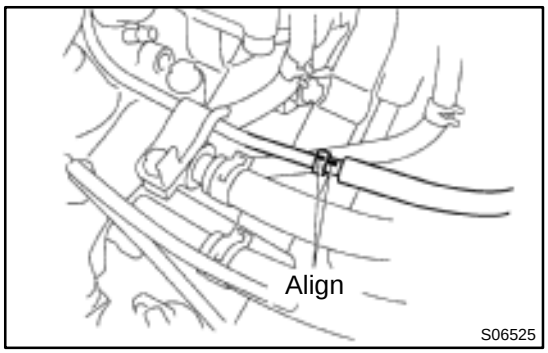

2. CONNECT NO.1 FUEL PIPE

(a) Align the alignment marks (white paint) on the No.1 fuel pipe.

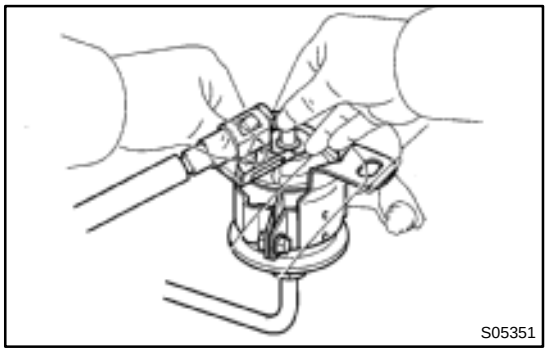

(b) Connect the No.1 fuel pipe (fuel tube connector) to the fuel filter.

CAUTION:
Perform connecting operations of the fuel tube connector (quick type) after observing the precaution.
(See page SF–1)

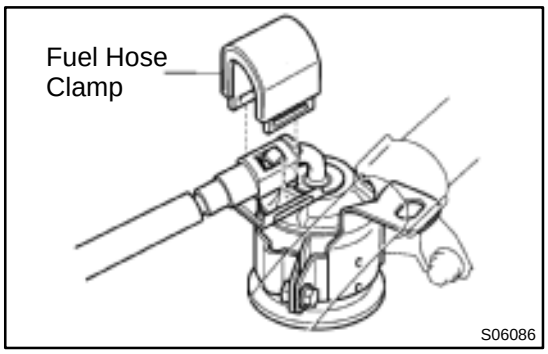

(c) Surely install the fuel hose clamp to the fuel filter with ”click” sound.
(d) After installing the clamp, check that the clamp is fixed by pulling up the clamp.

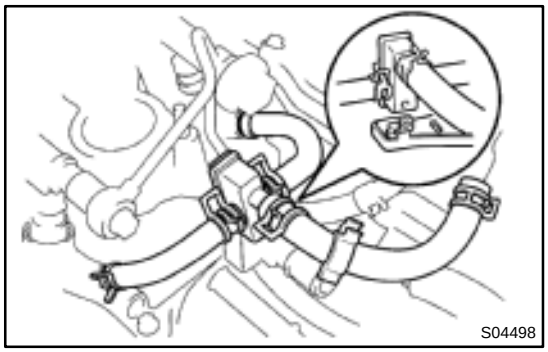

3. INSTALL AIR ASSIST HOSES AND PIPE
(a) Connect the air assist hoses to the intake manifold.
(b) Install the air assist pipe to the bracket on the No.1 fuel pipe.
4. CONNECT INJECTOR CONNECTORS
5. INSTALL AIR INTAKE CHAMBER ASSEMBLY (See page EM–57)
6. INSTALL AIR CLEANER HOSE
7. CHECK FOR FUEL LEAKS

FUEL TANK AND LINE

SF07N–03

COMPONENTS

CAUTION:

Always use new gaskets when replacing the fuel tank or component parts.
Apply the proper torque to all parts tightened.

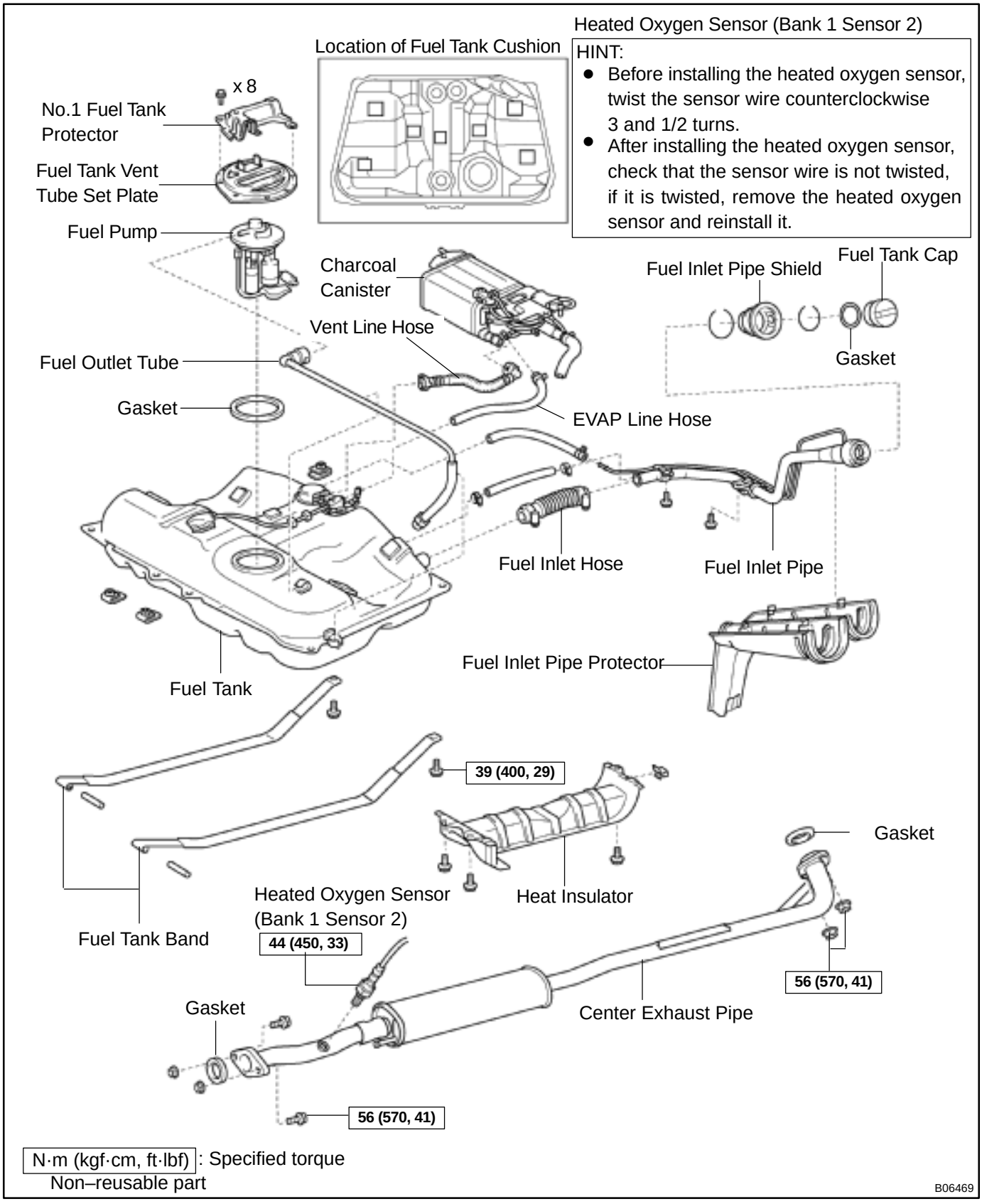

SF07O–03

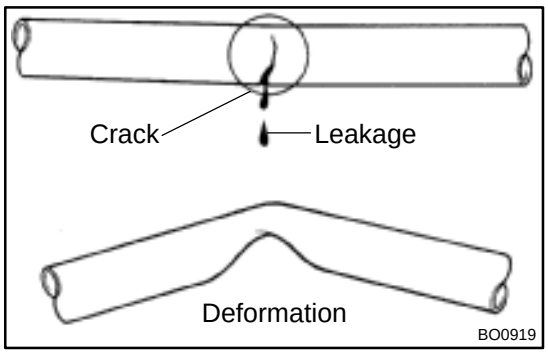

INSPECTION

INSPECT FUEL TANK AND LINE

(a) Check the fuel lines for cracks or leakage, and all connections for deformation.
(b) Check the fuel tank vapor vent system hoses and connections for looseness, sharp bends or damage.
(c) Check the fuel tank for deformation, cracks, fuel leakage or tank band looseness.
(d) Check the filler neck for damage or fuel leakage.
(e) Hose and pipe connections are as shown in the illustration.

If a problem is found, repair or replace the parts as necessary.

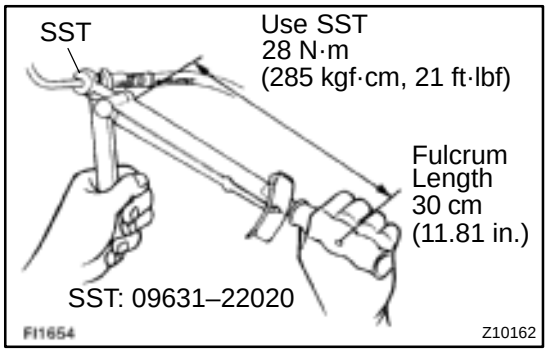

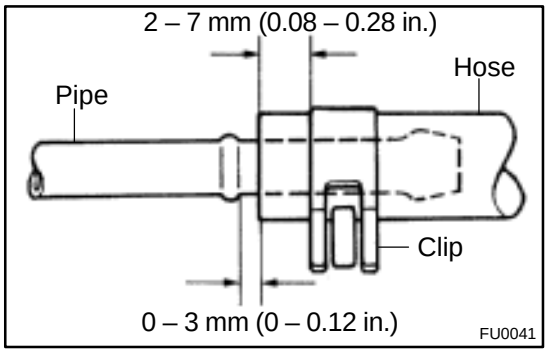

MASS AIR FLOW (MAF) METER

COMPONENTS

SF07P–04

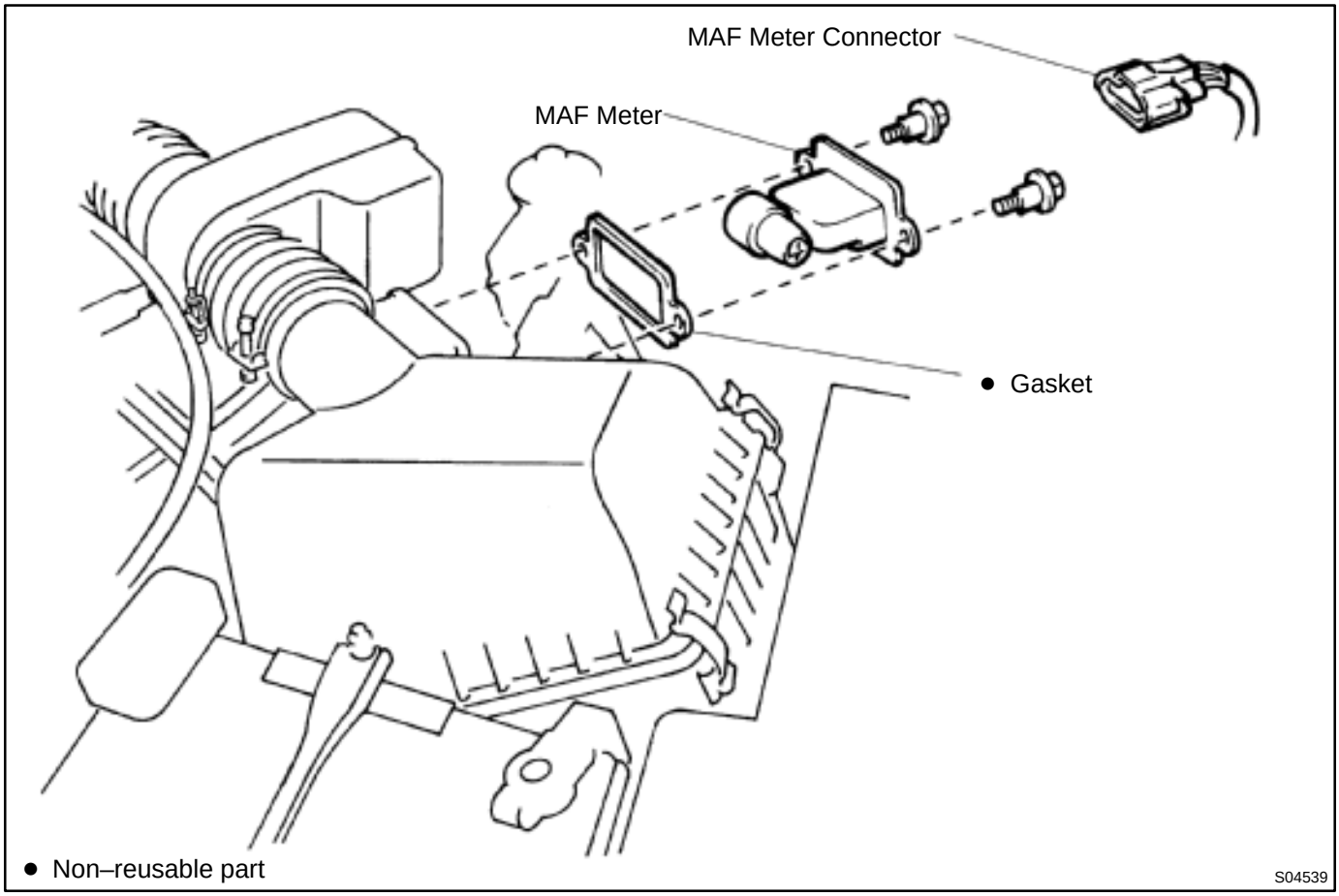

SF07Q–03

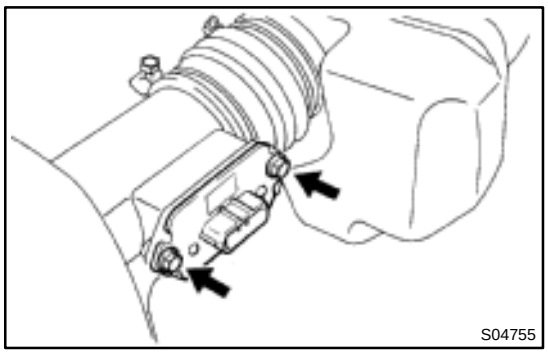

REMOVAL

REMOVE MAF METER

(a) Disconnect the MAF meter connector.

(b) Remove the 2 bolts, MAF meter and gasket.

HINT:

At the time of installation, please refer to the following items. Install a new gasket to the MAF meter.

SF07R–03

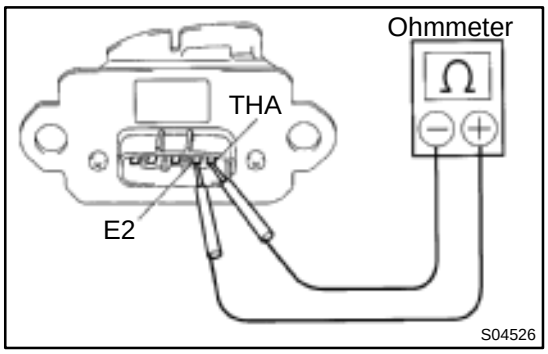

INSPECTION

1. INSPECT MAF METER RESISTANCE

Using an ohmmeter, measure the resistance between terminals THA and E2.

Resistance:

Terminals	Resistance	Temperature
THA – E2	14.6 – 17.8 kΩ	–20˚C (–4˚F)
THA – E2	2.21 – 2.69 kΩ	20˚C (68˚F)
THA – E2	0.29 – 0.35 kΩ	60˚C (140˚F)

If the resistance is not as specified, replace the MAF meter.

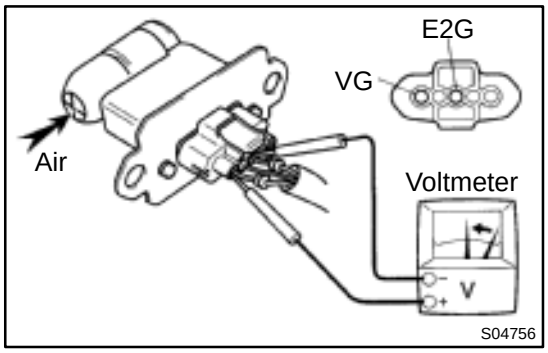

2. INSPECT MAF METER OPERATION

(a) Connect the MAF meter connector.
(b) Turn the ignition switch ON.
(c) Using a voltmeter, connect the positive (+) tester probe to terminal VG, and negative (–) tester probe to terminal E2G.
(d) Blow air into the MAF meter, and check that the voltage fluctuates.

If operation is not as specified, replace the MAF meter.

(e) Turn the ignition switch OFF.
(f) Disconnect the MAF meter connector.

SF07S–01

INSTALLATION

Installation is in the reverse order of removal. (See page SF–34)

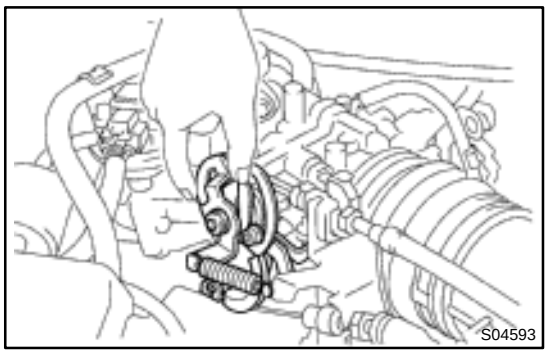

THROTTLE BODY

SF07T–03

ON–VEHICLE INSPECTION

1. INSPECT THROTTLE BODY

Check that the throttle linkage moves smoothly.

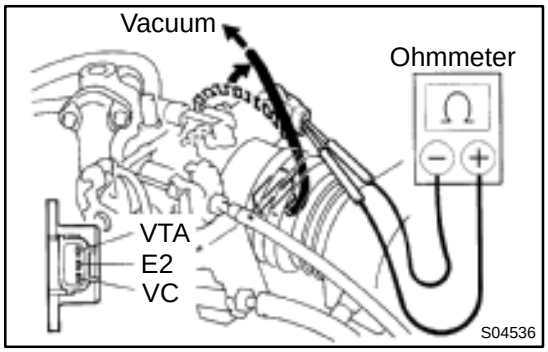

2. INSPECT THROTTLE POSITION SENSOR

(a) Disconnect the sensor connector.
(b) Disconnect the vacuum hose from the throttle body.
(c) Apply vacuum to the throttle opener.
(d) Using an ohmmeter, measure the resistance between each terminal.

Resistance:

Throttle valve condition	Between terminals	Resistance
Fully closed	VTA – E2	0.2 – 6.3 kΩ
Fully open	VTA – E2	2.0 – 10.2 kΩ
–	VC – E2	2.5 – 5.9 kΩ

(e) Reconnect the vacuum hose to the throttle body.
(f) Reconnect the sensor connector.

3. INSPECT THROTTLE OPENER

(a) Allow the engine to warm up to normal operating temperature.
(b) Check idle speed.

Idle speed: 700 ± 50 rpm

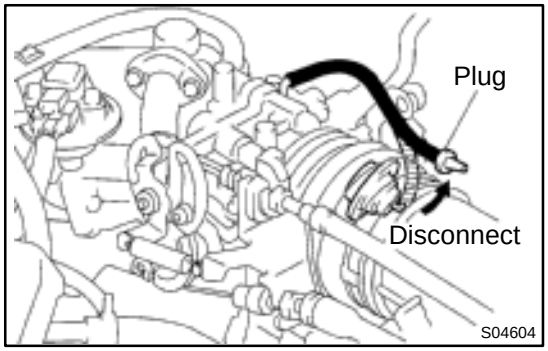

(c) Disconnect the vacuum hose from the throttle opener, and plug the hose end.
(d) Check the throttle opener setting speed.

Throttle opener setting speed: 900 – 1,950 rpm

If the throttle opener setting is not as specified, replace the throttle body.

(e) Stop the engine.
(f) Reconnect the vacuum hose to the throttle opener.
(g) Start the engine and check that the idle speed returns to the correct speed.

SF07U–03

COMPONENTS

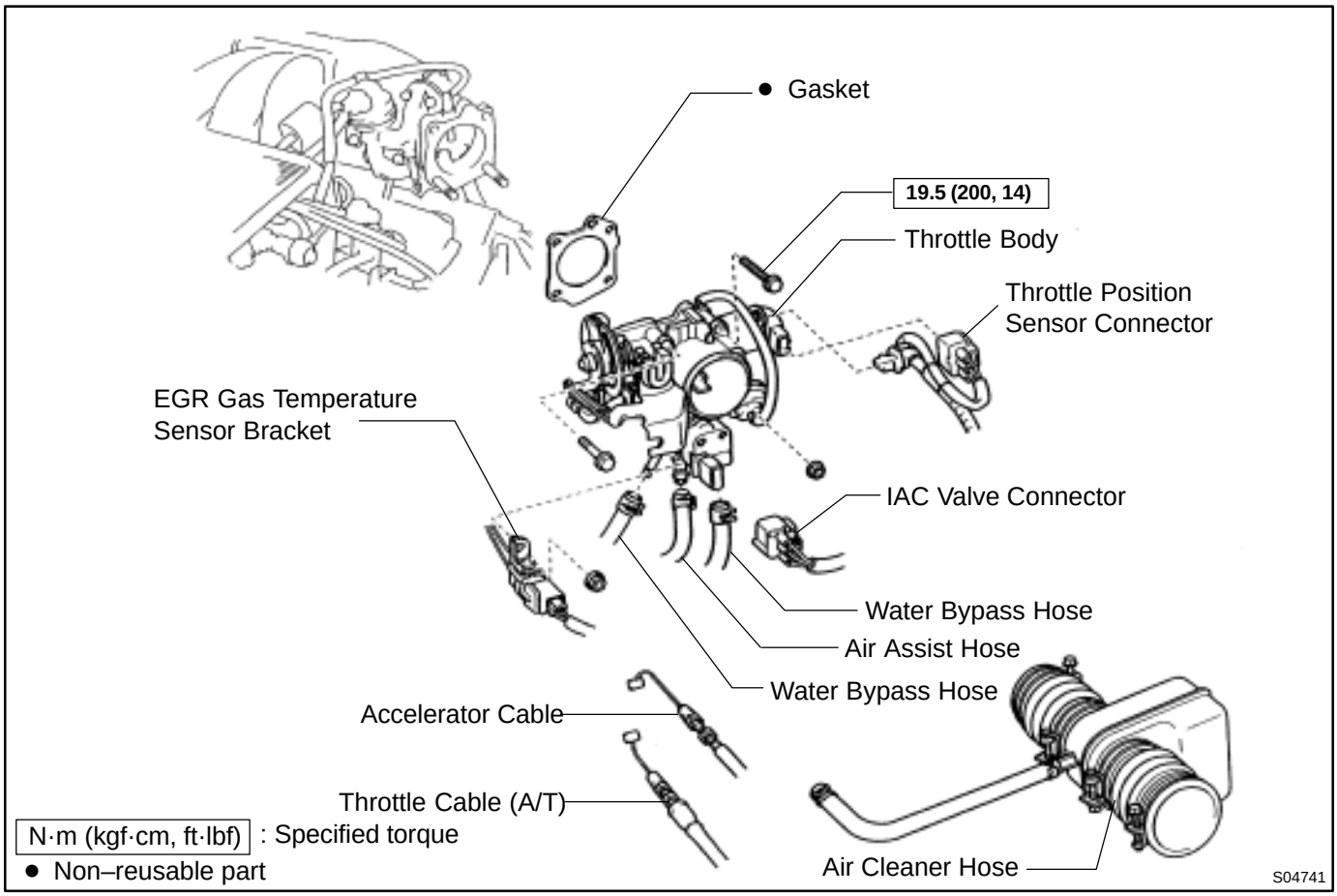

SF07V–03

REMOVAL

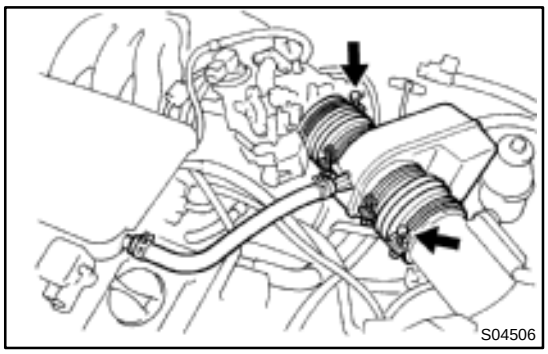

1. DRAIN ENGINE COOLANT

2. DISCONNECT ACCELERATOR CABLE

3. A/T:
DISCONNECT THROTTLE CABLE

4. REMOVE AIR CLEANER HOSE

(a) Disconnect the PCV hose.

(b) Loosen the 2 hose clamps, and remove the air cleaner hose.

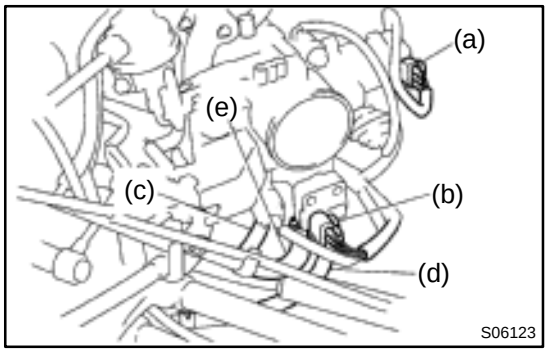

5. REMOVE THROTTLE BODY

(a) Disconnect the throttle position sensor connector.

(b) Disconnect the IAC valve connector.

(c) Disconnect the water bypass hose (from the intake manifold).

(d) Disconnect the water bypass hose (from the water inlet housing).

(e) Disconnect the air assist hose.

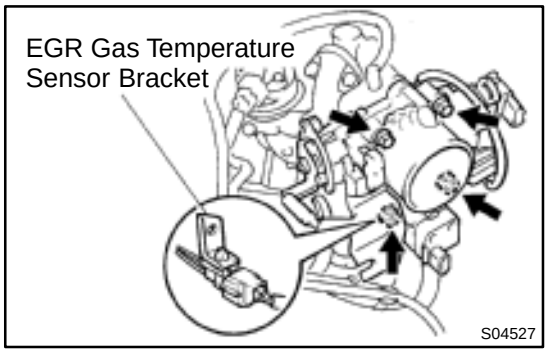

(f) Remove the 2 bolts, 2 nuts, EGR gas temperature sensor bracket, throttle body and gasket.

HINT:

At the time of installation, please refer to the following items. Place a new gasket on the air intake chamber.

Torque: 19.5 N·m (200 kgf·cm, 14 ft·lbf)

SF07W–03

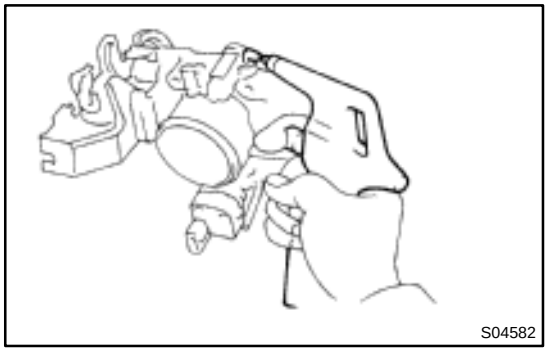

INSPECTION

1. CLEAN THROTTLE BODY

(a) Using a soft brush and carburetor cleaner, clean the cast parts.

(b) Using compressed air, clean all the passages and apertures.

NOTICE:

To prevent deterioration, do not clean the throttle position sensor and IAC valve.

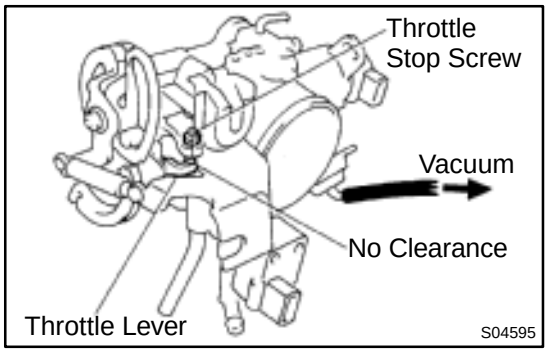

2. INSPECT THROTTLE VALVE

(a) Apply vacuum to the throttle opener.

(b) Check that there is no clearance between the throttle stop screw and throttle lever when the throttle valve is fully closed.

3. INSPECT THROTTLE POSITION SENSOR

(See page SF–37)

SF07X–01

INSTALLATION

Installation is in the reverse order of removal. (See page SF–39)

IDLE AIR CONTROL (IAC) VALVE

SF07Y–03

ON–VEHICLE INSPECTION

1. INSPECT IAC VALVE OPERATION

(a) Initial conditions:
- Engine at normal operating temperature
- Idle speed checked correctly
- Transmission in neutral position
- A/C switch OFF

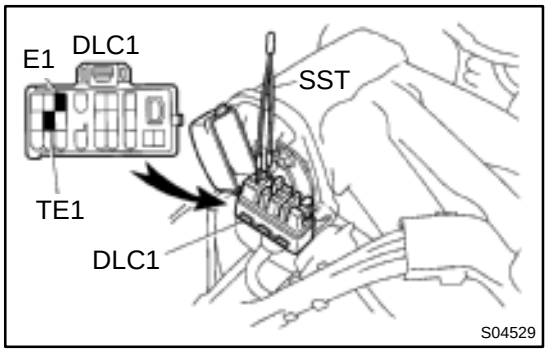

(b) Using SST, connect terminals TE1 and E1 of the DLC1.
SST 09843–18020

(c) After engine speed is kept at approx. 1,000 rpm for 5 seconds, check that it returns to idle speed.

If the engine speed operation is not as specified, check the IAC valve, wiring and ECM.

(d) Remove the SST from the DLC1.
SST 09843–18020

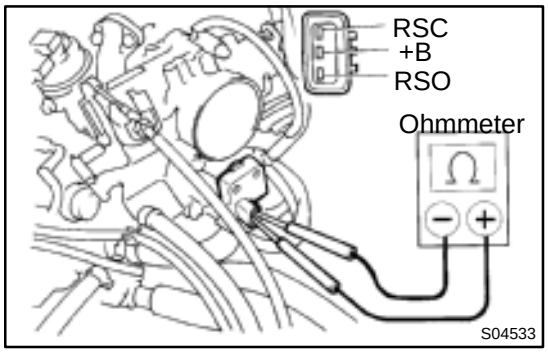

2. INSPECT IAC VALVE RESISTANCE

NOTICE:

"Cold" and "Hot" in the following sentences express the temperature of the coils themselves. "Cold" is from –10˚C (14˚F) to 50˚C (122˚F) and "Hot" is from 50˚C (122˚F) to 100˚C (212˚F).

(a) Disconnect the IAC valve connector.

(b) Using an ohmmeter, measure the resistance between terminal +B and other terminals (RSC, RSO).
Resistance:

Cold	17.0 – 25.0 Ω
Hot	21.5 – 29.5 Ω

If resistance is not as specified, replace the IAC valve.

(c) Reconnect the IAC valve connector.

3. INSPECT AIR ASSIST SYSTEM

(a) Initial conditions:
- Engine at normal operating temperature
- Idle speed checked correctly
- Transmission in neutral position
- A/C switch OFF

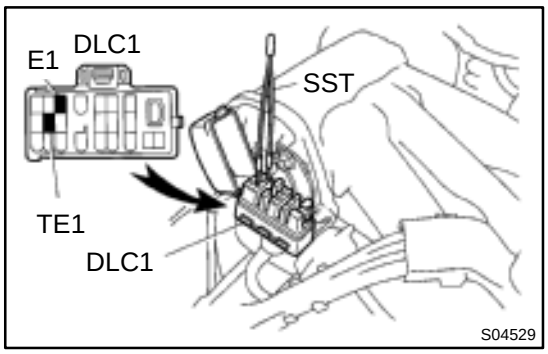

(b) Using SST, connect terminals TE1 and E1 of the DLC1.
SST 09843–18020

(c) After engine speed is kept at 900 – 1,300 rpm for 10 seconds, check that it returns to idle speed.

(d) Stop the engine.

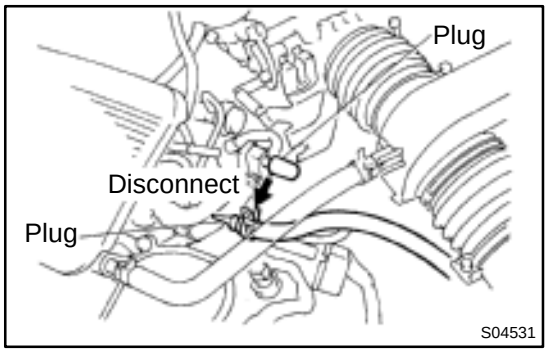

(e) Disconnect the air assist hose from the air pipe, and block off the IAC valve exit and the entry to the pipe.

(f) Start the engine and check that the idle speed reaches 500 rpm or below (the engine may stall).

If the idle does not reach 500 rpm or below, check for a leak between the air assist hoses, pipe and injectors.

(g) Remove the SST from the DLC1.
SST 09843–18020

(h) Reconnect the air assist hose to the air pipe.

SF07Z–03

COMPONENTS

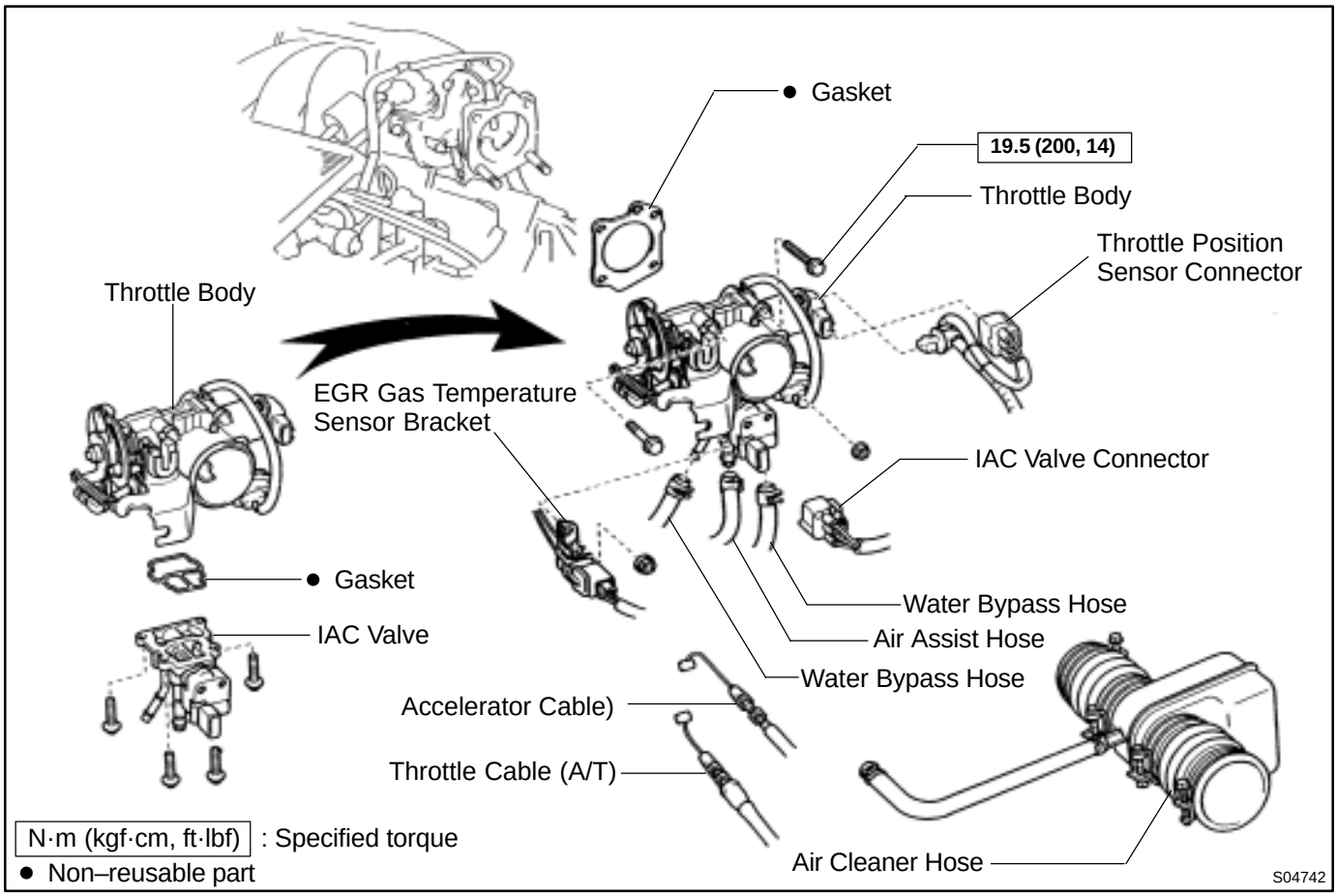

SF080–03

REMOVAL

1. REMOVE THROTTLE BODY (See page SF–39)

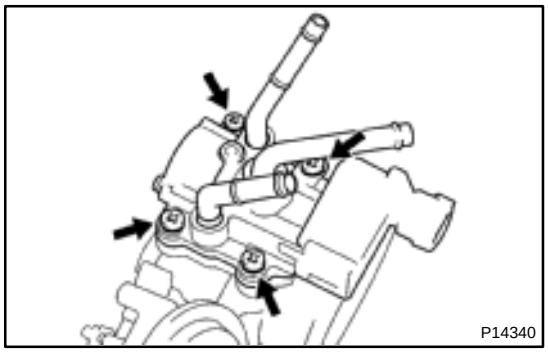

2. REMOVE IAC VALVE

Remove the 4 screws, IAC valve and gasket.

HINT:

At the time of installation, please refer to the following items.

Place a new gasket on the throttle body.

SF081–03

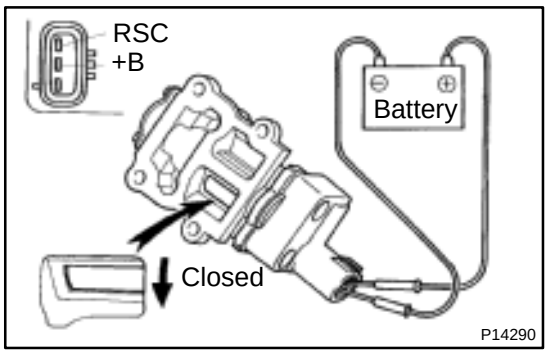

INSPECTION

INSPECT IAC VALVE OPERATION

(a) Connect the positive (+) lead from the battery to terminal +B and negative (–) lead to terminal RSC, and check that the valve is closed.

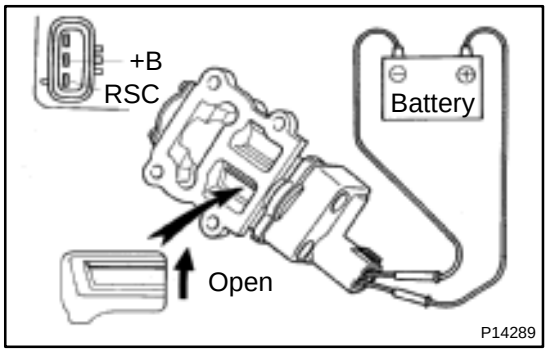

(b) Connect the positive (+) lead from the battery to terminal +B and negative (–) lead to terminal RSO, and check that the valve is open.

If operation is not as specified, replace the IAC valve.

SF082–01

INSTALLATION

Installation is in the reverse order of removal. (See page SF–45)

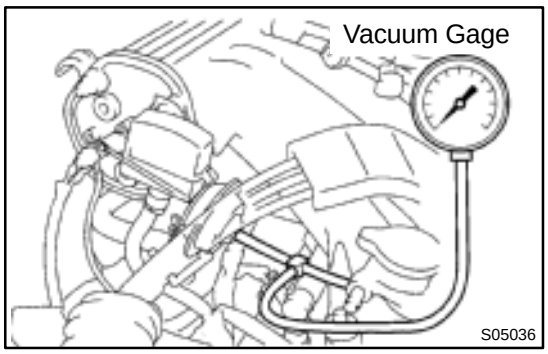

ACOUSTIC CONTROL INDUCTION SYSTEM (ACIS)

SF083–03

ON–VEHICLE INSPECTION

INSPECT INTAKE AIR CONTROL VALVE

(a) Using a 3–way connector, connect vacuum gauge to the actuator hose.
(b) Start the engine.
(c) While the engine is idling, check that the vacuum gauge needle does not move.

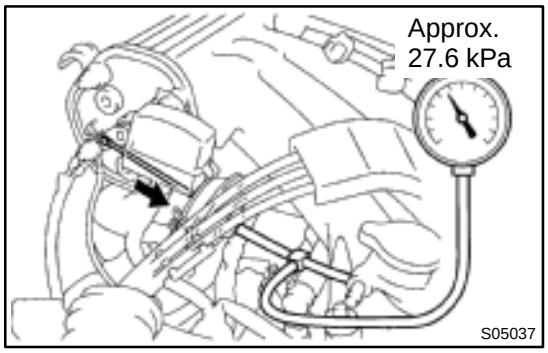

(d) Rapidly depress the accelerator pedal to fully open position and check that the vacuum gauge needle momentarily fluctuates up to approx. 26.7 kPa (200 mmHg, 7.9 in.Hg). (The actuator rod is pulled out.)

SF084–03

COMPONENTS

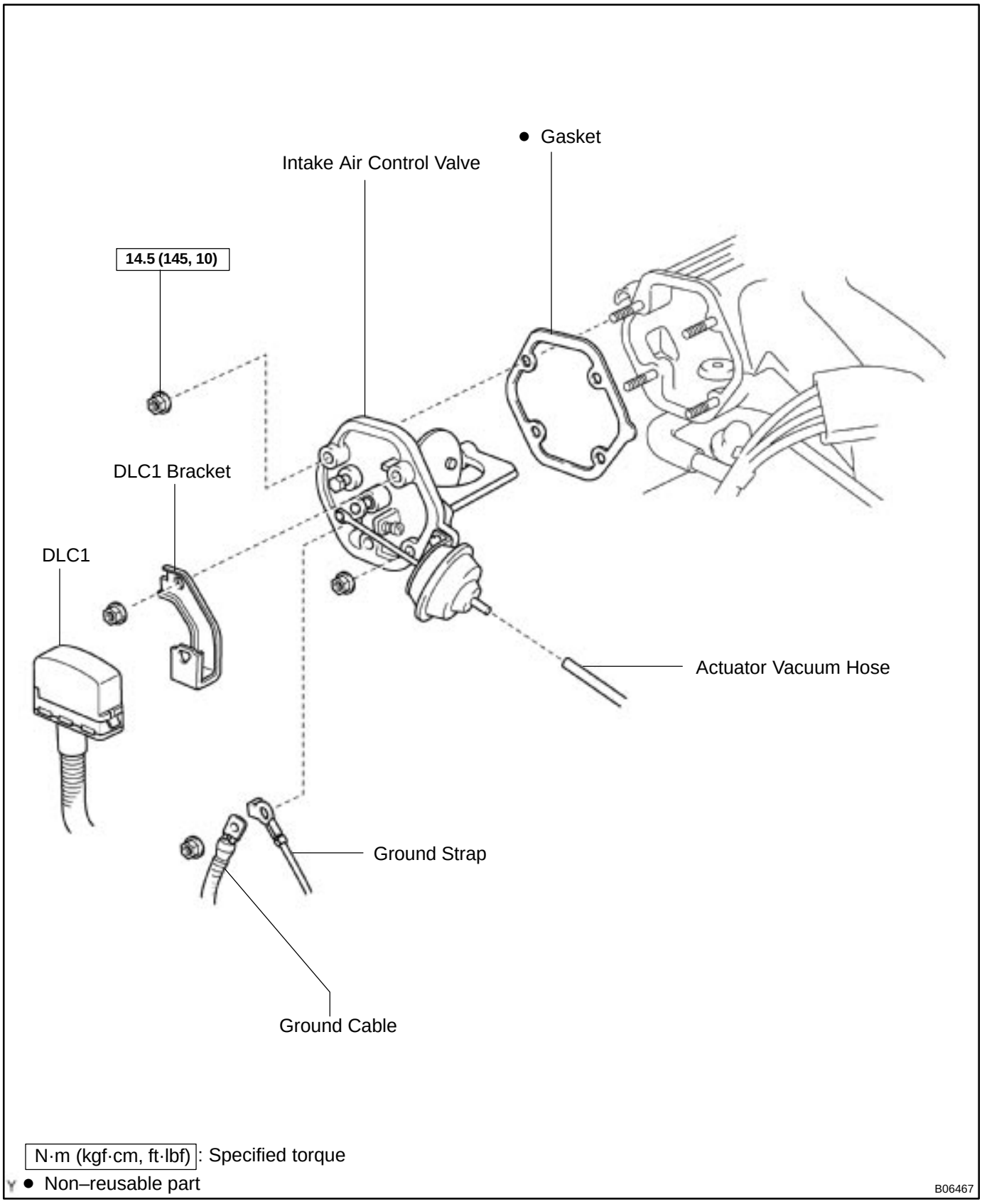

SF085–02

REMOVAL

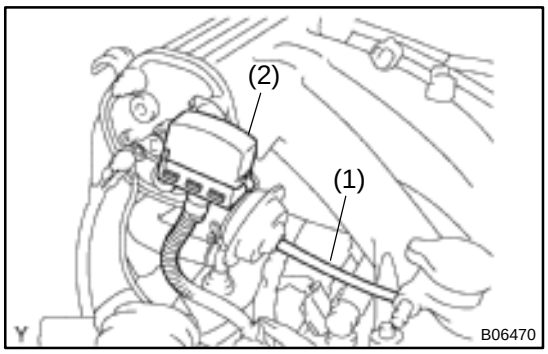

1. DISCONNECT ACTUATOR VACUUM HOSE

2. DISCONNECT DLC1 FROM DLC1 BRACKET

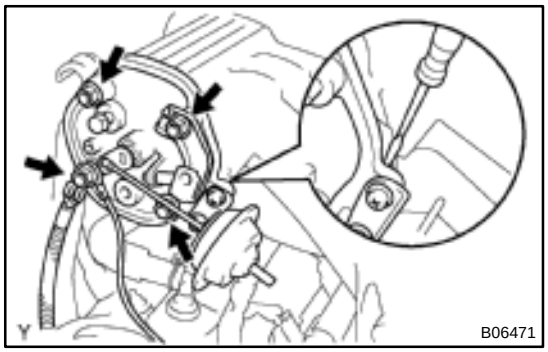

3. REMOVE INTAKE AIR CONTROL VALVE

(a) Remove the 4 nuts and DLC1 bracket, and disconnect the ground strap and cable.

(b) Remove the intake air control valve by prying a screwdriver between the intake air control valve and air intake chamber.

(c) Remove the gasket.

SF086–03

INSPECTION

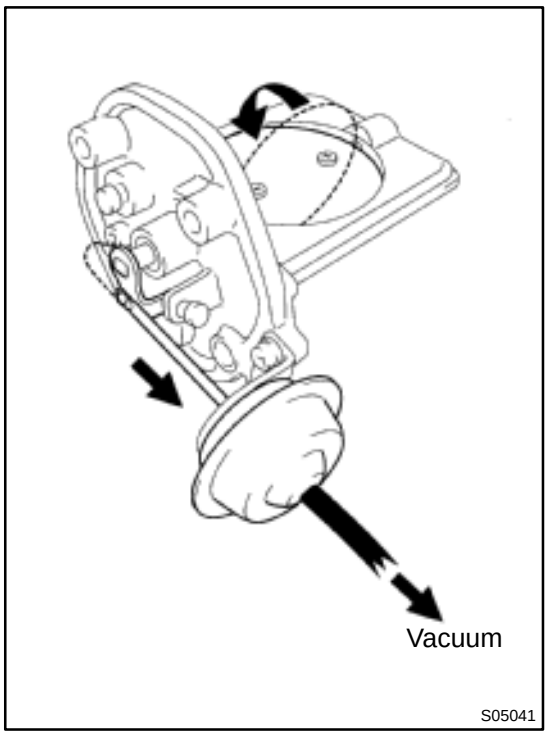

1. INSPECT INTAKE AIR CONTROL VALVE

(a) With 26.7 kPa (200 mmHg, 7.9 in.Hg) of vacuum applied to the actuator, check that the actuator rod moves.

(b) One minute after applying the vacuum in (a), check that the actuator rod does not return.

If the operation is not as specified, replace the intake air control valve.

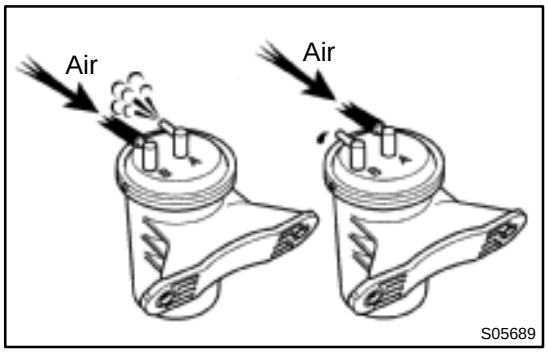

2. INSPECT VACUUM TANK

LOCATION: The LH side member under the battery tray.

(a) Check that air flows from port B to port A.

(b) Check that air does not flow from port A to port B.

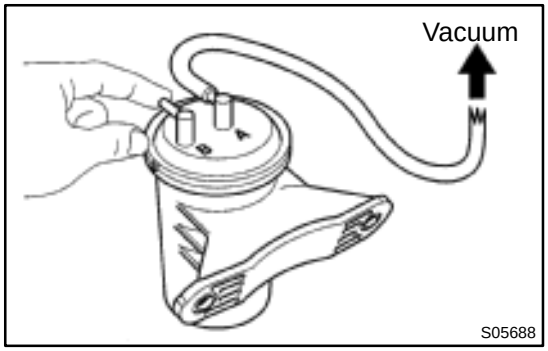

(c) Plug port B with your finger, and apply 26.7 kPa (200 mmHg, 7.9 in.Hg) of vacuum to port A, and check that there is no change is vacuum after one minute.

If the operation is not as specified, replace the vacuum tank.

3. INSPECT VSV (See page SF–60)

SF087–03

INSTALLATION

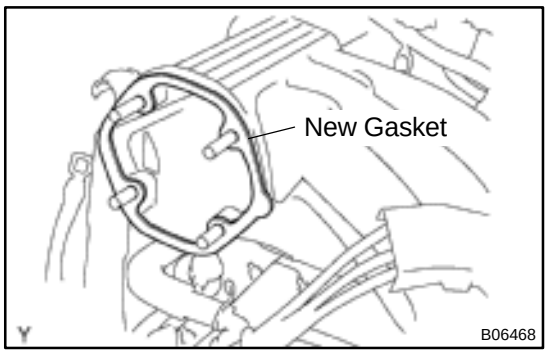

1. INSTALL INTAKE AIR CONTROL VALVE

(a) Install a new gasket to the air intake chamber.

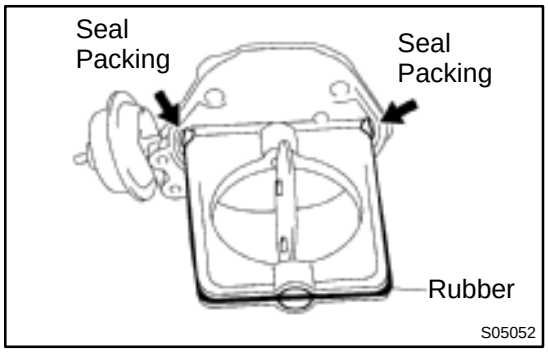

(b) Apply a light coat of engine oil to the rubber portions.

(c) Apply seal packing to the positions of the intake air control valve shown in the illustration.

Seal packing: Part No. 08826–00080 or equivalent

(d) Install the intake air control valve, DLC1 bracket, ground strap and cable with the 4 nuts.

Torque: 14.5 N·m (145 kgf·cm, 10 ft·lbf)

2. CONNECT DLC1

3. CONNECT ACTUATOR VACUUM HOSE

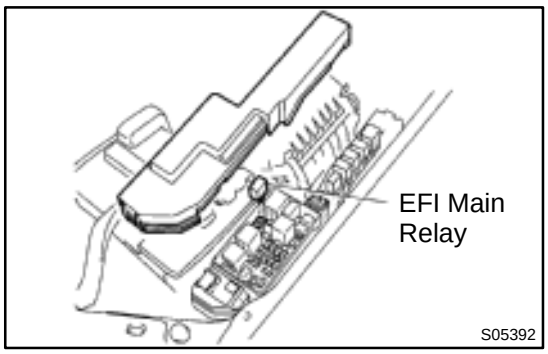

EFI MAIN RELAY

SF088–03

INSPECTION

1. **REMOVE RELAY BOX COVER**
2. **REMOVE EFI MAIN RELAY (Marking: EFI)**

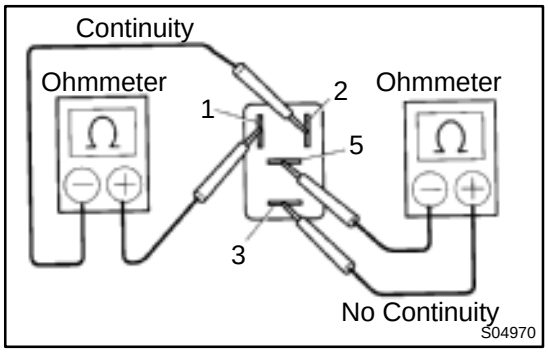

3. **INSPECT EFI MAIN RELAY CONTINUITY**

(a) Using an ohmmeter, check that there is continuity between terminals 1 and 2.

If there is no continuity, replace the relay.

(b) Check that there is no continuity between terminals 3 and 5.

If there is continuity, replace the relay.

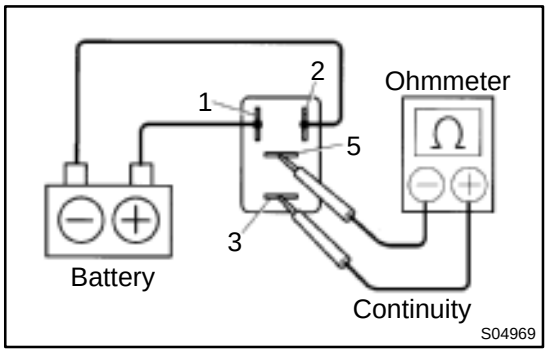

4. **INSPECT EFI MAIN RELAY OPERATION**

(a) Apply battery positive voltage across terminals 1 and 2.

(b) Using an ohmmeter, check that there is continuity between terminals 3 and 5.

If there is no continuity, replace the relay.

5. **REINSTALL EFI MAIN RELAY**
6. **REINSTALL RELAY BOX COVER**

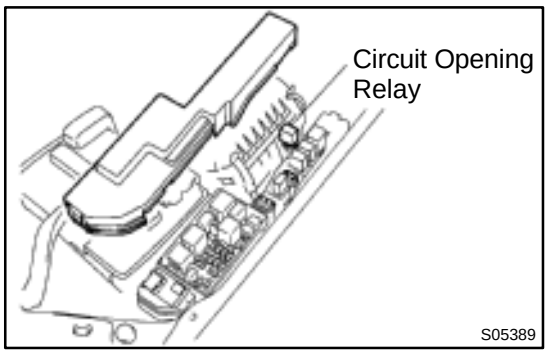

CIRCUIT OPENING RELAY

SF089–03

INSPECTION

1. REMOVE RELAY BOX COVER

2. REMOVE CIRCUIT OPENING RELAY (Marking: CIR OPN)

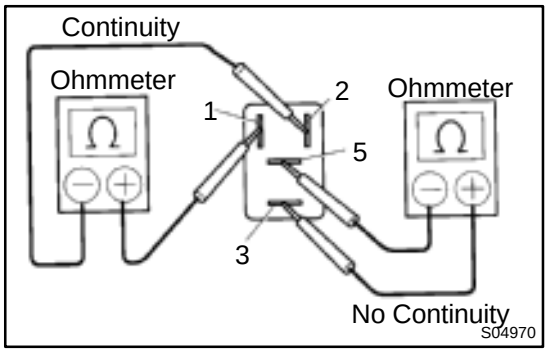

3. INSPECT CIRCUIT OPENING RELAY CONTINUITY

(a) Using an ohmmeter, check that there is continuity between terminals 1 and 2.

If there is no continuity, replace the relay.

(b) Check that there is no continuity between terminals 3 and 5.

If there is continuity, replace the relay.

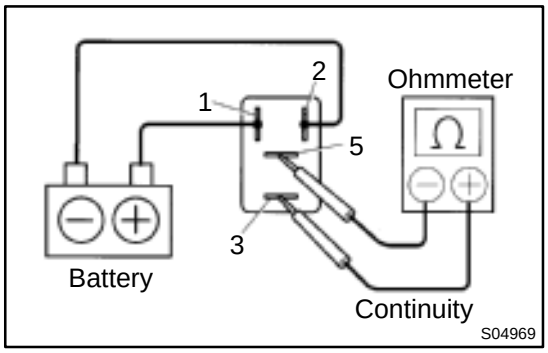

4. INSPECT CIRCUIT OPENING RELAY OPERATION

(a) Apply battery positive voltage across terminals 1 and 2.

(b) Using an ohmmeter, check that there is continuity between terminals 3 and 5.

If there is no continuity, replace the relay.

5. REINSTALL CIRCUIT OPENING RELAY

6. REINSTALL RELAY BOX COVER

VSV FOR EXHAUST GAS RECIRCULATION (EGR)

SF08A–03

COMPONENTS

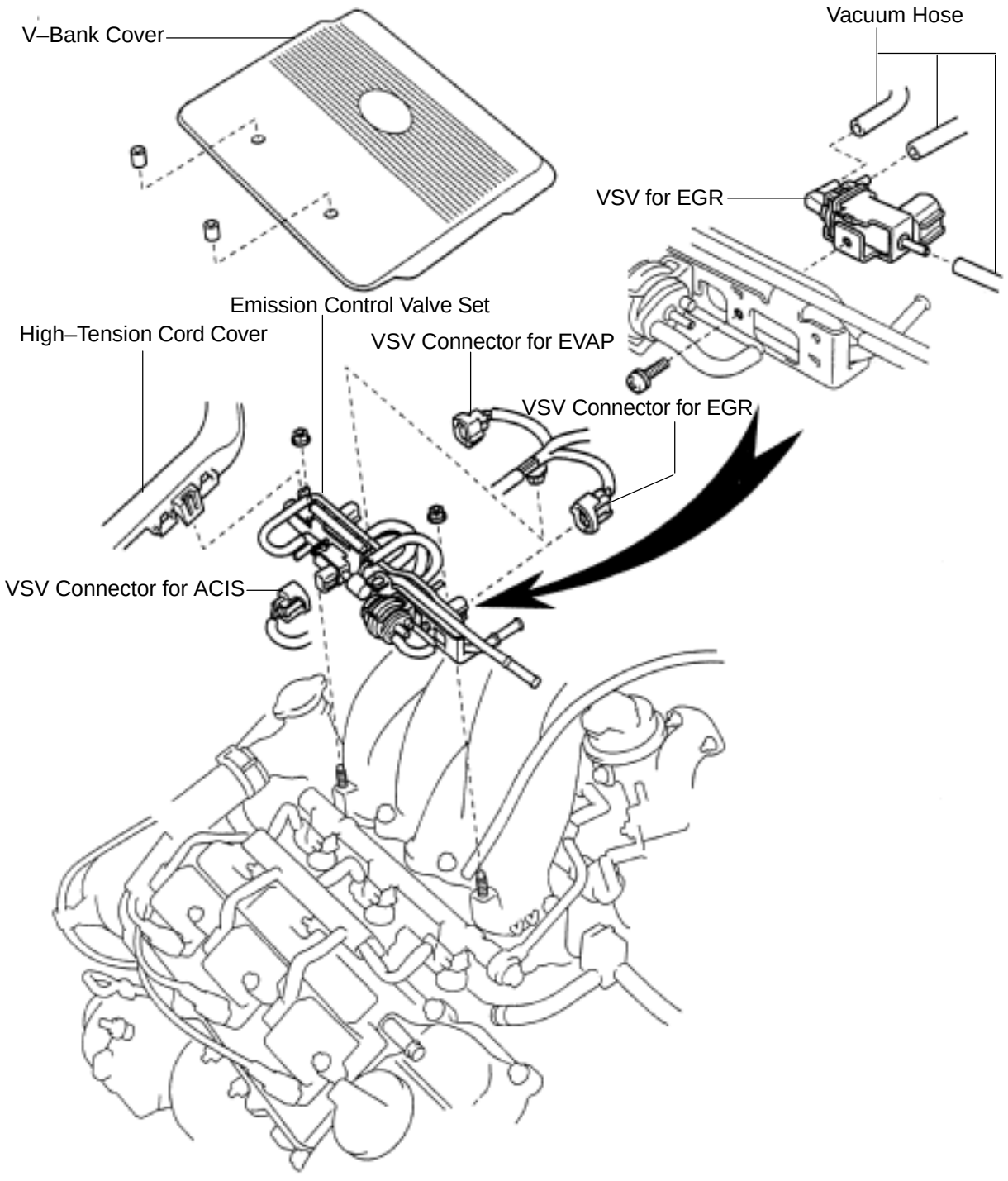

SF08B–03

INSPECTION

1. REMOVE V–BANK COVER, HIGH–TENSION CORD COVER AND EMISSION CONTROL VALVE SET

2. REMOVE VSV

(a) Disconnect the 3 vacuum hoses from the VSV.

(b) Remove the screw and VSV.

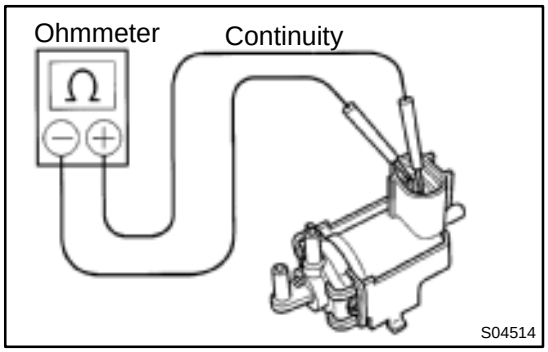

3. INSPECT VSV FOR OPEN CIRCUIT

Using an ohmmeter, check that there is continuity between the terminals.

Resistance: 27 – 33 Ω at 20˚C (68˚F)

If there is no continuity, replace the VSV.

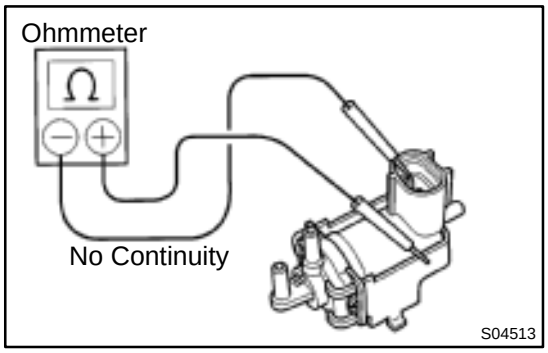

4. INSPECT VSV FOR GROUND

Using an ohmmeter, check that there is no continuity between each terminal and the body.

If there is continuity, replace the VSV.

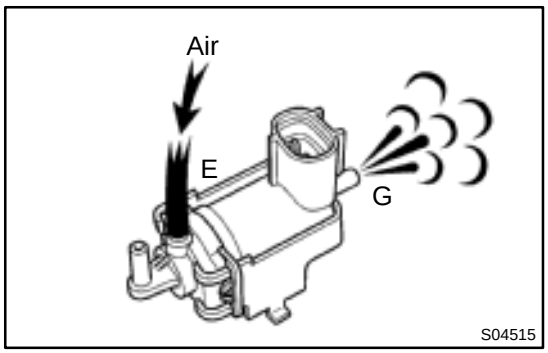

5. INSPECT VSV OPERATION

(a) Check that air flows from port E to port G.

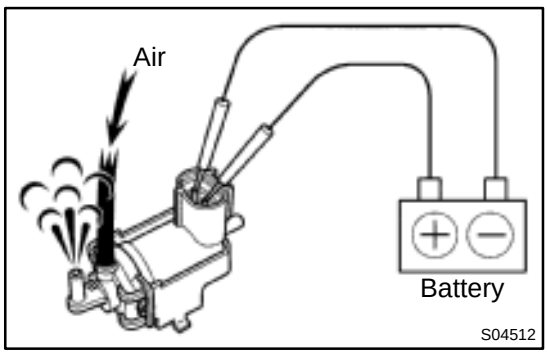

(b) Apply battery positive voltage across the terminals.

(c) Check that air flows from port E to port F.

If operation is not as specified, replace the VSV.

6. REINSTALL VSV

(a) Install the VSV with the screw.

(b) Connect the 3 vacuum hoses to the VSV.

7. REINSTALL EMISSION CONTROL VALVE SET

8. REINSTALL HIGH–TENSION CORD COVER

9. REINSTALL V–BANK COVER

VSV FOR EVAPORATIVE EMISSION (EVAP)

SF08C–03

COMPONENTS

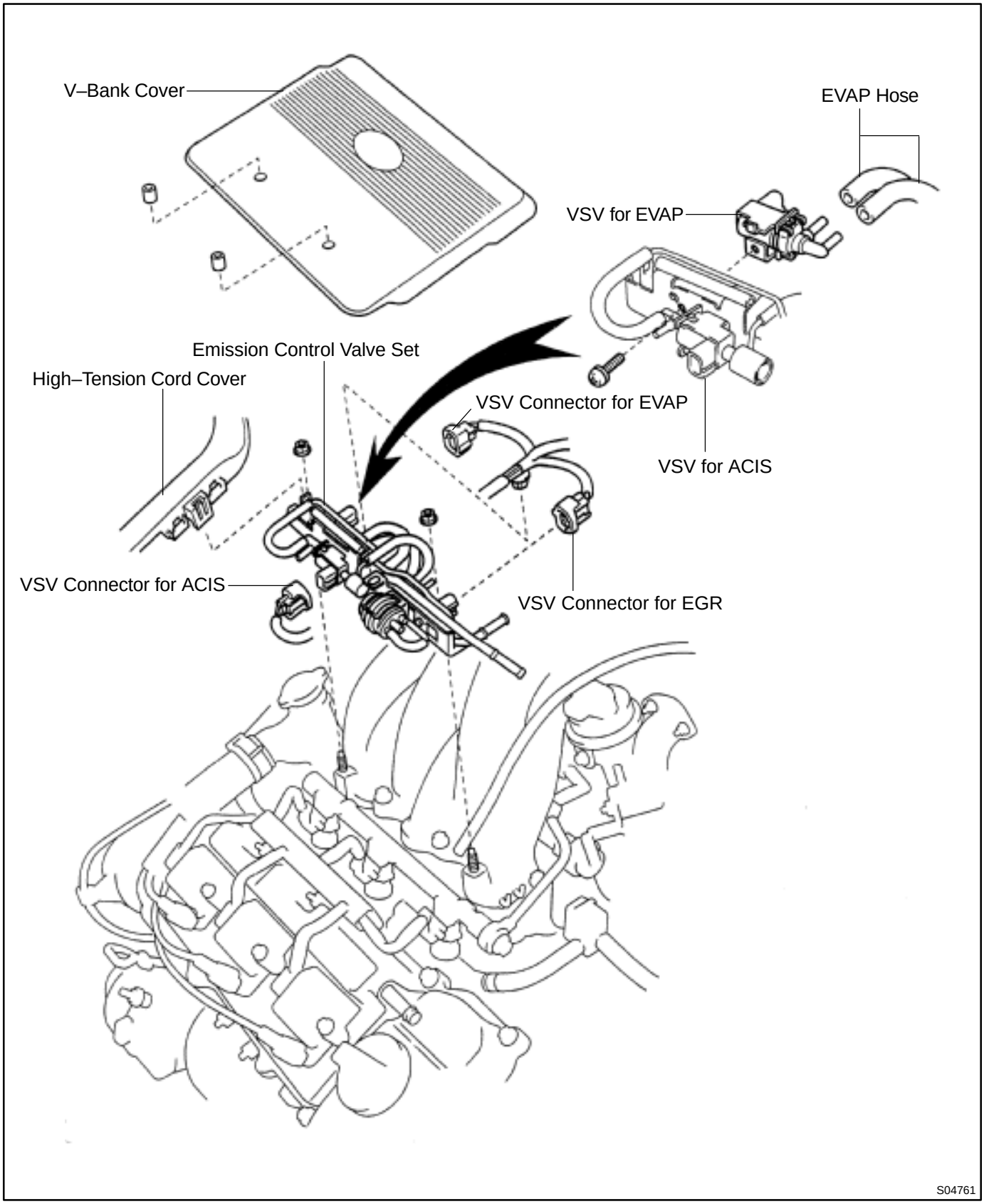

SF08D–03

INSPECTION

1. REMOVE V–BANK COVER, HIGH–TENSION CORD COVER AND EMISSION CONTROL VALVE SET

2. REMOVE VSV

(a) Disconnect the 2 EVAP hoses from the VSV.

(b) Remove the screw and VSV.

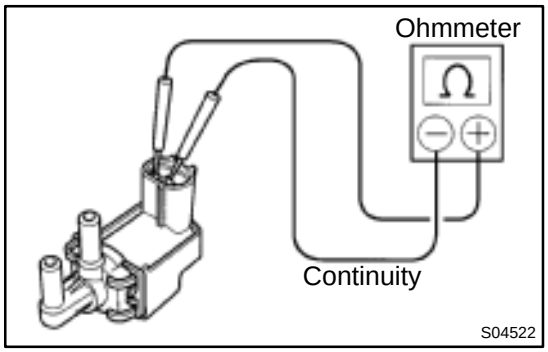

3. INSPECT VSV FOR OPEN CIRCUIT

Using an ohmmeter, check that there is continuity between the terminals.

Resistance: 27 – 33 Ω at 20˚C (68˚F)

If there is no continuity, replace the VSV.

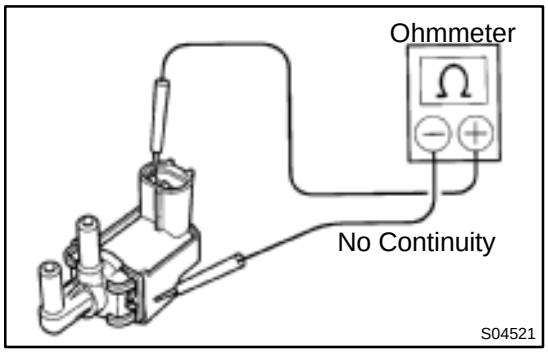

4. INSPECT VSV FOR GROUND

Using an ohmmeter, check that there is no continuity between each terminal and the body.

If there is continuity, replace the VSV.

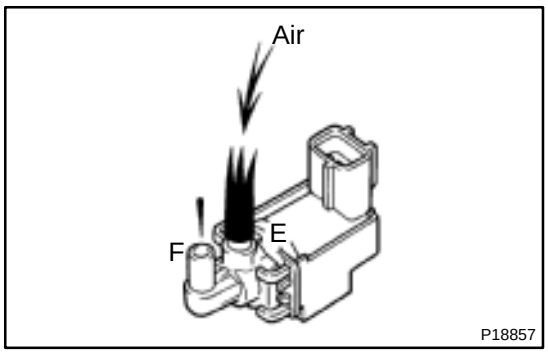

5. INSPECT VSV OPERATION

(a) Check that air flows with difficulty from port E to port F.

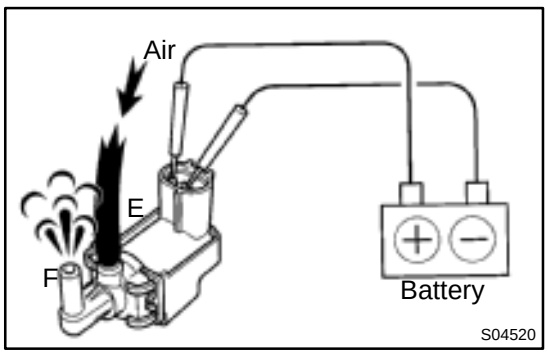

(b) Apply battery positive voltage across the terminals.

(c) Check that air flows from port E to port F.

If operation is not as specified, replace the VSV.

6. REINSTALL VSV

(a) Install the VSV with the screw.

(b) Connect the 2 EVAP hoses to the VSV.

7. REINSTALL EMISSION CONTROL VALVE SET

8. REINSTALL HIGH–TENSION CORD COVER

9. REINSTALL V–BANK COVER

VSV FOR ACOUSTIC CONTROL INDUCTION SYSTEM (ACIS)

SF08E–03

COMPONENTS

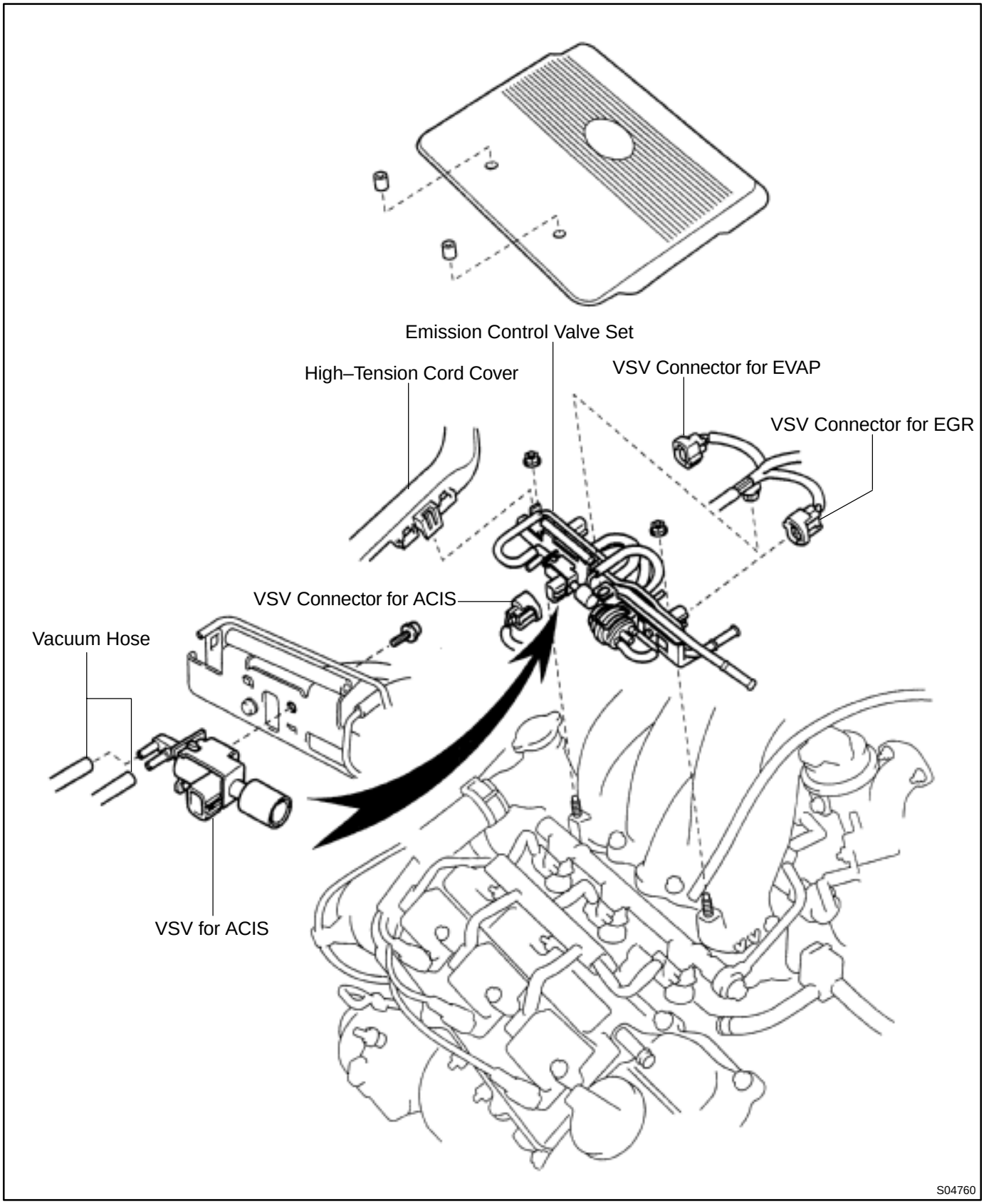

SF08F–04

INSPECTION

1. REMOVE V–BANK COVER, HIGH–TENSION CORD COVER AND EMISSION CONTROL VALVE SET

2. REMOVE VSV

(a) Disconnect the 2 vacuum hoses from the VSV.

(b) Remove the screw and VSV.

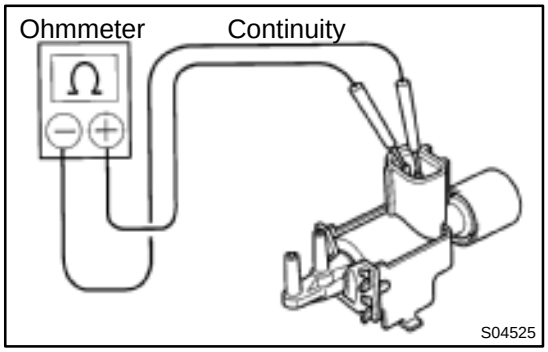

3. INSPECT VSV FOR OPEN CIRCUIT

Using an ohmmeter, check that there is continuity between each terminals.

Resistance: 33 – 39 Ω at 20˚C (68˚F)

If there is no continuity, replace the VSV.

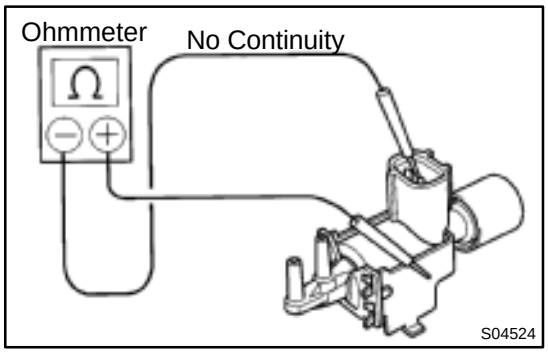

4. INSPECT VSV FOR GROUND

Using an ohmmeter, check that there is no continuity between each terminal and the body.

If there is continuity, replace the VSV.

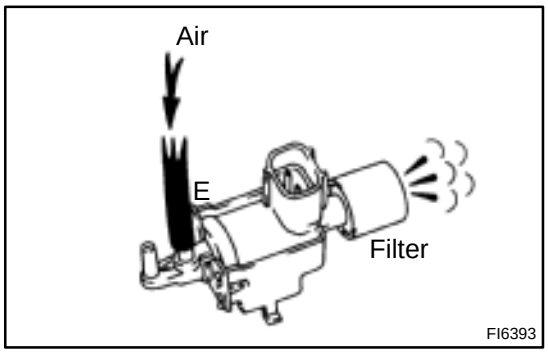

5. INSPECT VSV OPERATION

(a) Check that air flows from port E to the filter.

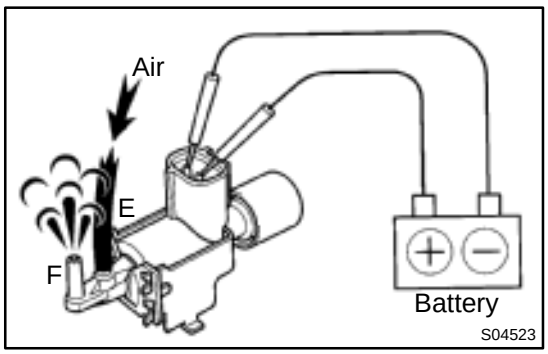

(b) Apply battery positive voltage across the terminals.

(c) Check that air flows from port E to port F.

If operation is not as specified, replace the VSV.

6. REINSTALL VSV

(a) Install the VSV with the screw.

(b) Connect the 2 vacuum to the VSV.

7. REINSTALL EMISSION CONTROL VALVE SET

8. REINSTALL HIGH–TENSION CORD COVER

9. REINSTALL V–BANK COVER

VSV FOR VAPOR PRESSURE SENSOR

COMPONENTS

SF08G–03

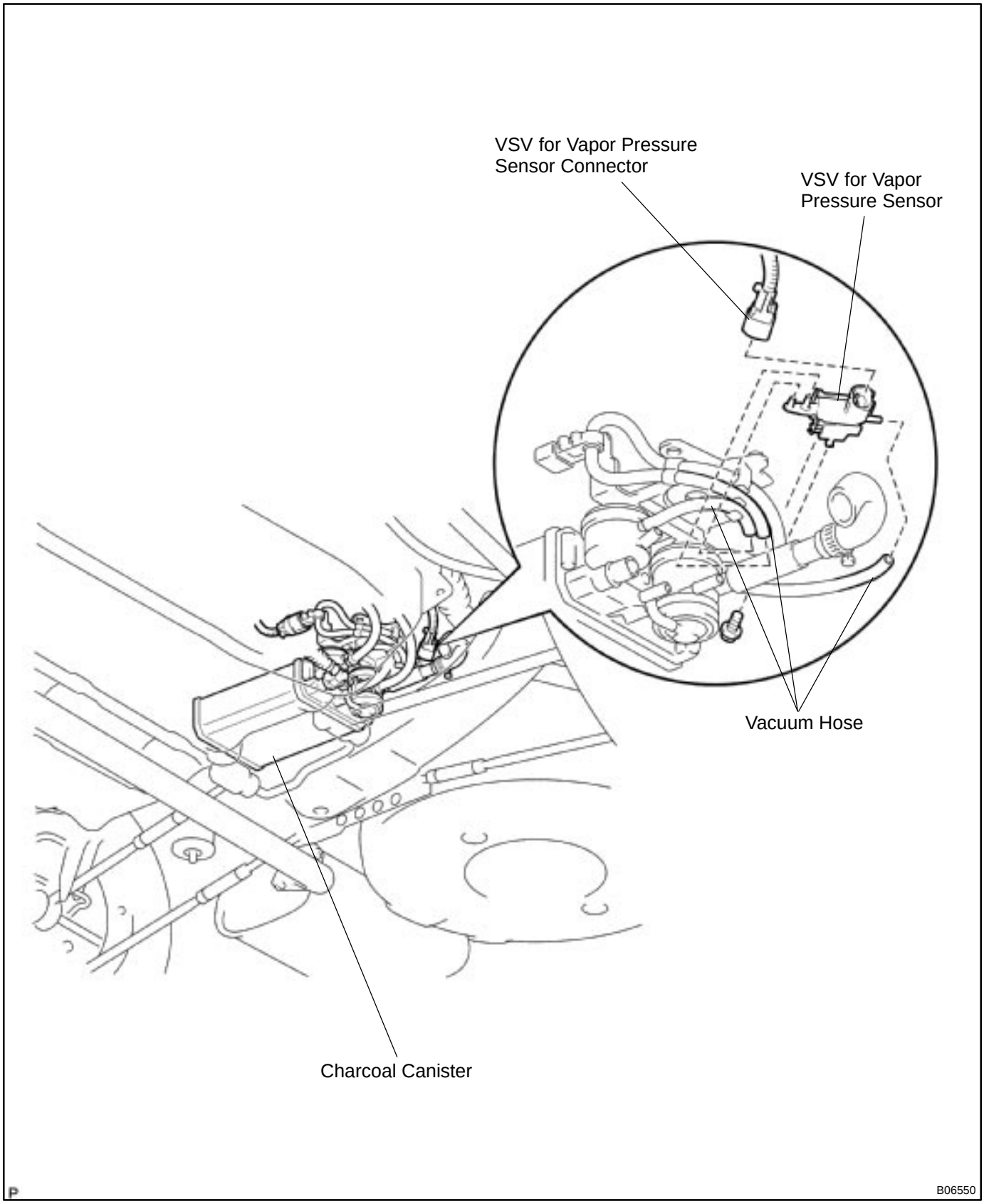

SF08H–03

INSPECTION

1. REMOVE VSV

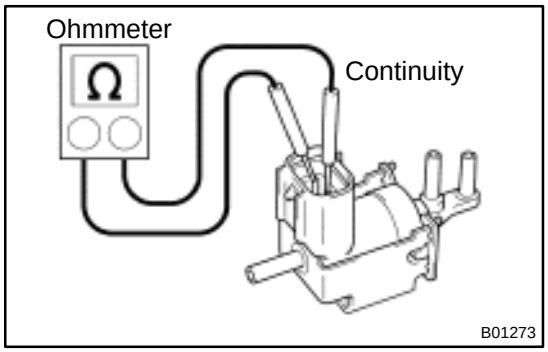

2. INSPECT VSV FOR OPEN CIRCUIT

Using an ohmmeter, check that there is continuity between the terminals.

Resistance: 33 – 39 Ω at 20˚C (68˚F)

If there is no continuity, replace the VSV.

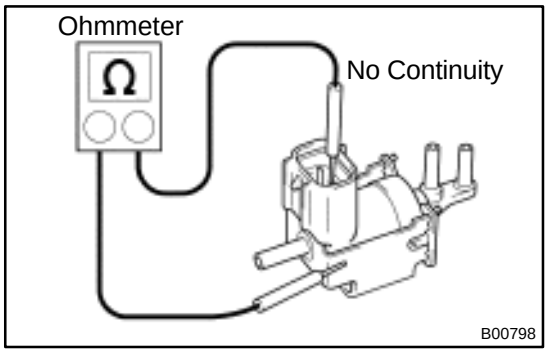

3. INSPECT VSV FOR GROUND

Using an ohmmeter, check that there is no continuity between each terminal and the body.

If there is continuity, replace the VSV.

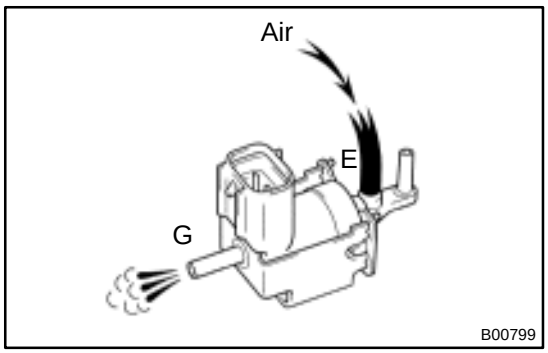

4. INSPECT VSV OPERATION

(a) Check that air flows from ports E to G.

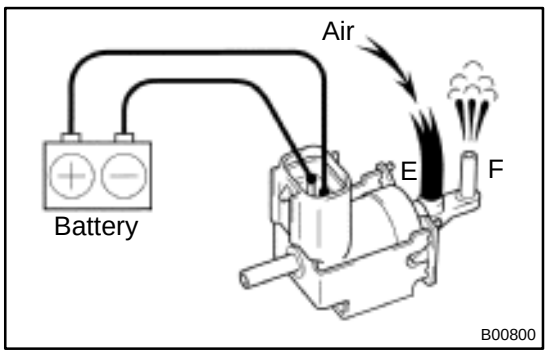

(b) Apply battery positive voltage across the terminals.

(c) Check that air flows from ports E to F.

If operation is not as specified, replace the VSV.

5. REINSTALL VSV

ENGINE COOLANT TEMPERATURE (ECT) SENSOR

SF08I–03

INSPECTION

1. DRAIN ENGINE COOLANT

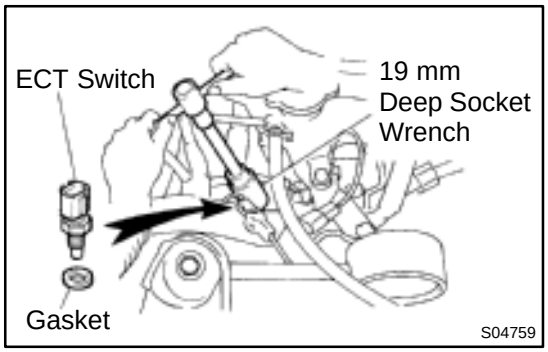

2. REMOVE ECT SENSOR

(a) Disconnect the ECT sensor connector.

(b) Using a 19 mm deep socket wrench, remove the ECT sensor and gasket.

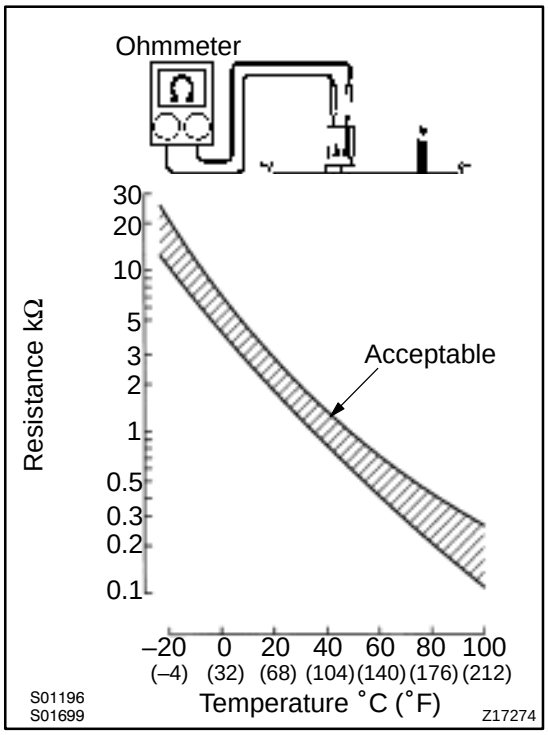

3. INSPECT ECT SENSOR

Using an ohmmeter, measure the resistance between the terminals.

Resistance: Refer to the graph

If the resistance is not as specified, replace the ECT sensor.

4. REINSTALL ECT SENSOR

(a) Install a new gasket to the ECT sensor.

(b) Using a 19 mm deep socket, install the ECT sensor.

Torque: 20 N·m (200 kgf·cm, 14 ft·lbf)

(c) Connect the ECT sensor connector.

5. REFILL WITH ENGINE COOLANT

VAPOR PRESSURE SENSOR

SF0Z9–01

COMPONENTS

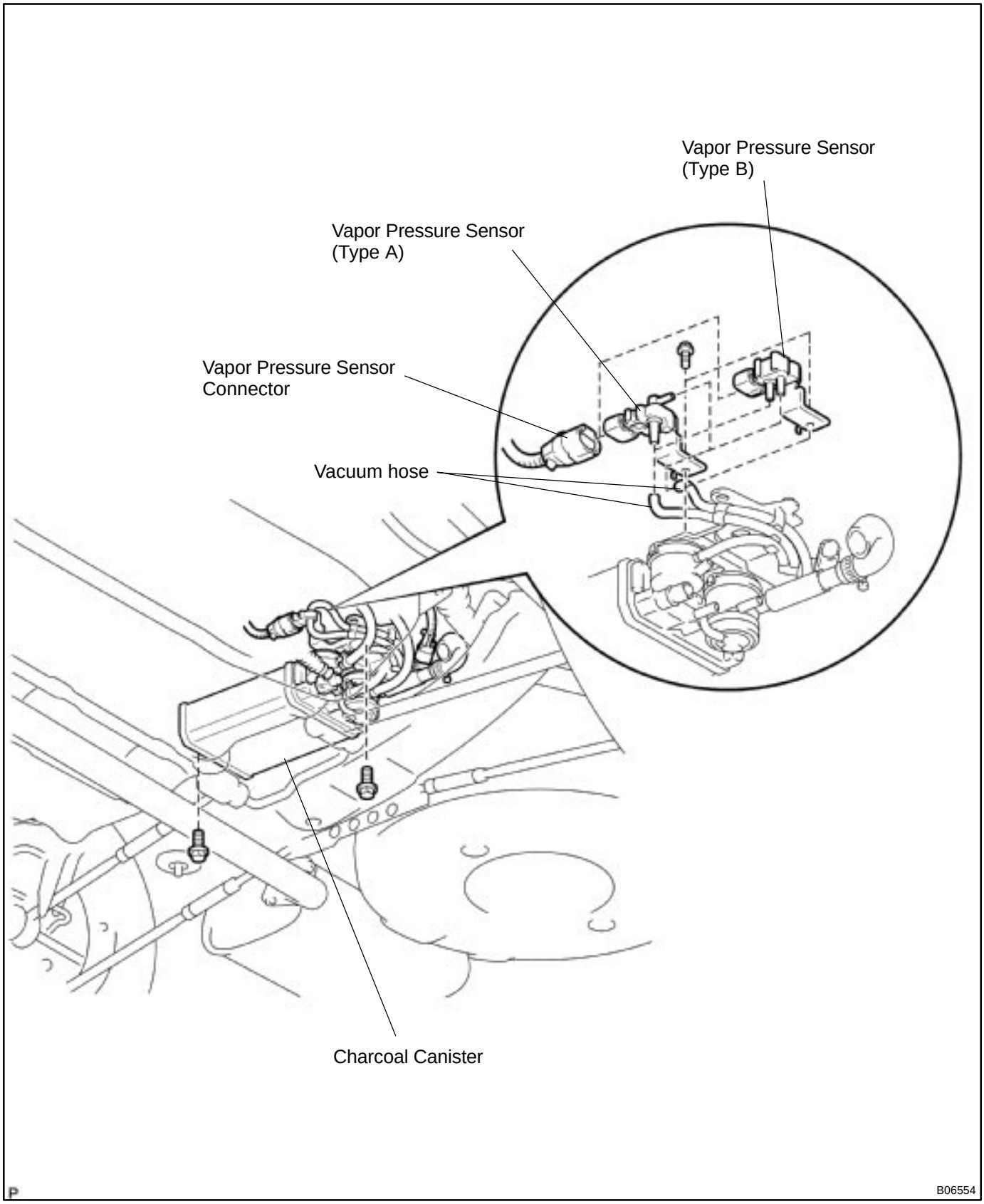

SF08J–04

INSPECTION

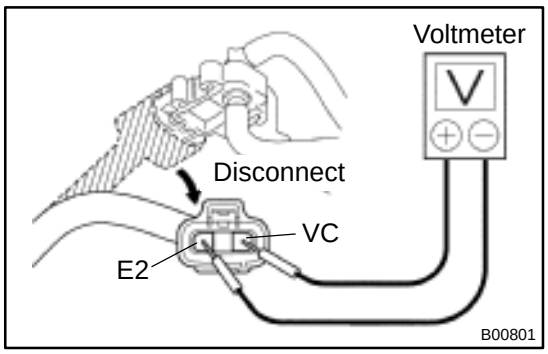

1. INSPECT POWER SOURCE VOLTAGE OF VAPOR PRESSURE SENSOR

(a) Disconnect the vapor pressure sensor connector.
(b) Turn the ignition switch ON.
(c) Using a voltmeter, measure the voltage between connector terminals VC and E2 of the wiring harness side.
Voltage: 4.5 – 5.5 V
(d) Turn the ignition switch OFF.
(e) Reconnect the vapor pressure sensor connector.

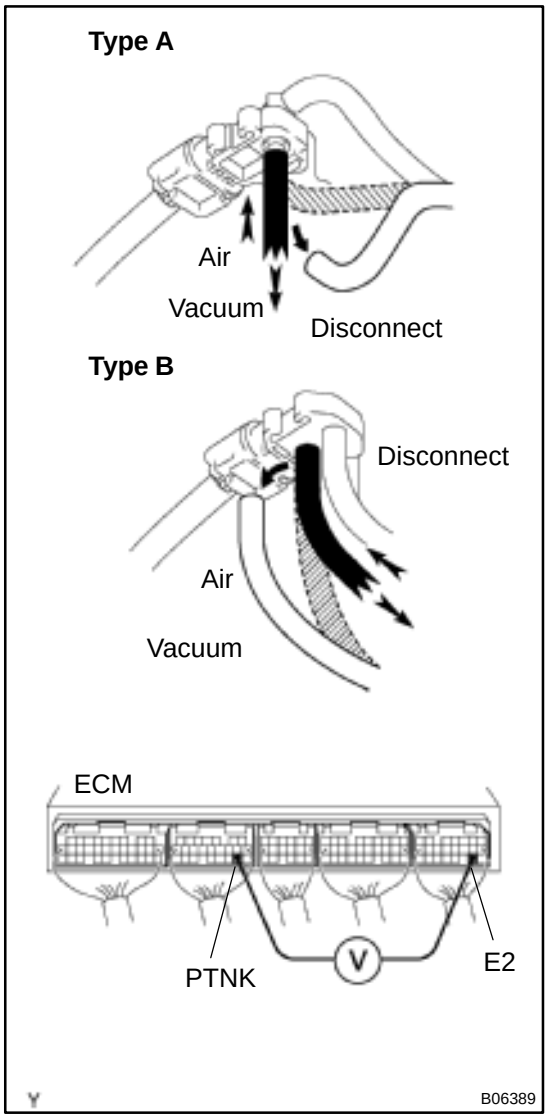

2. INSPECT POWER OUTPUT OF VAPOR PRESSURE SENSOR

(a) Turn the ignition switch ON.
(b) Disconnect the vacuum hose from the vapor pressure sensor.
(c) Connect a voltmeter to terminals PTNK and E2 of the ECM, and measure the output voltage under the following conditions:
(1) Apply vacuum (2.0 kPa (15 mmHg, 0.59 in.Hg)) to the vapor pressure sensor.
Voltage: 1.3 – 2.1 V
(2) Release the vacuum from the vapor pressure sensor.
Voltage: 3.0 – 3.6 V
(3) Apply pressure (1.5 kPa (15 gf/cm^2, 0.22 psi)) to the vapor pressure sensor.
Voltage: 4.2 – 4.8 V
(d) Turn the ignition switch OFF.
(e) Reconnect the vacuum hose to the vapor pressure sensor.

KNOCK SENSOR

COMPONENTS

SF08K–03

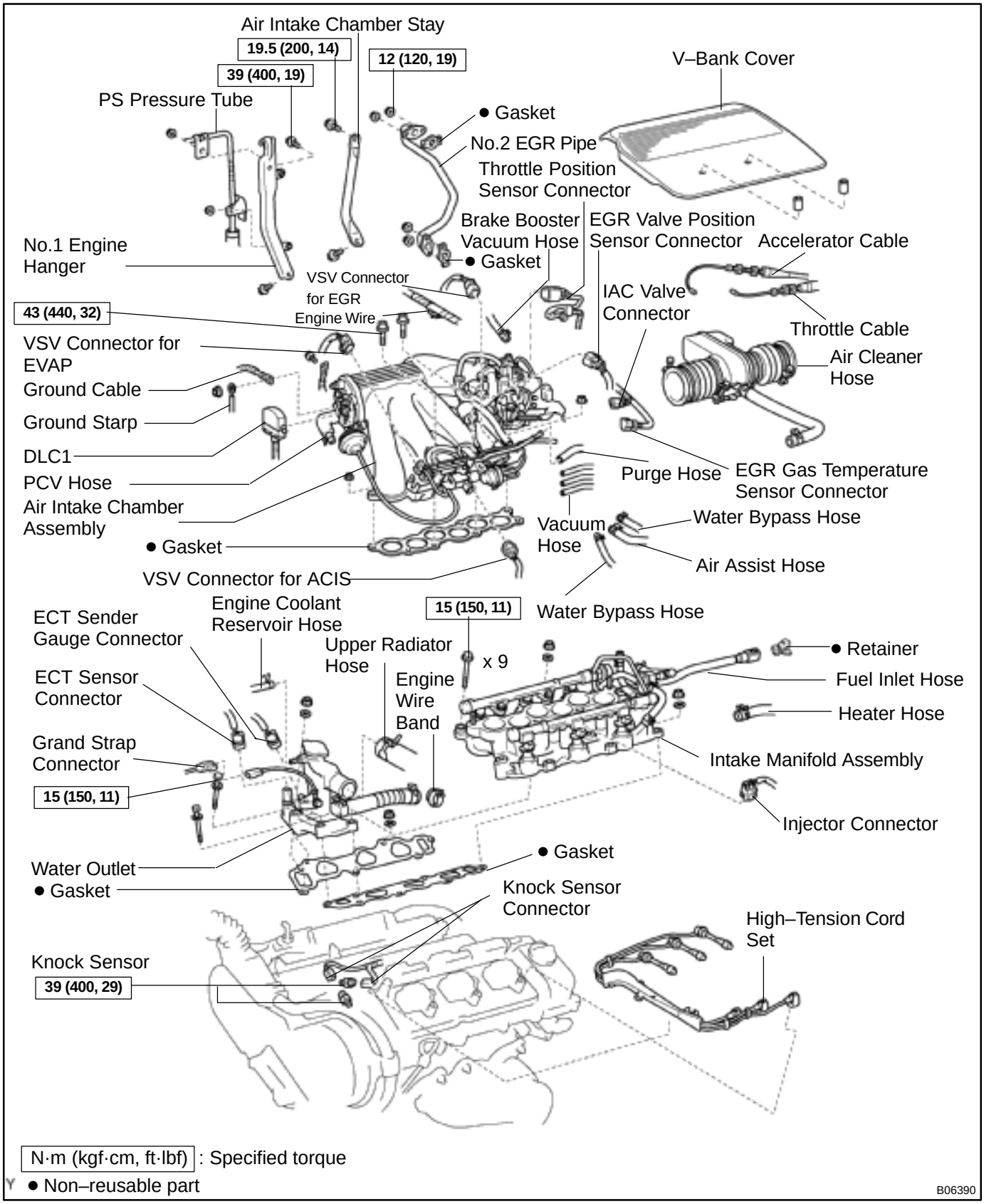

SF08L–03

INSPECTION

1. **REMOVE AIR CLEANER HOSE**
2. **REMOVE RH ENGINE MOUNTING STAY**
3. **REMOVE INTAKE MANIFOLD ASSEMBLY AND WATER OUTLET (Seepage EM–32)**

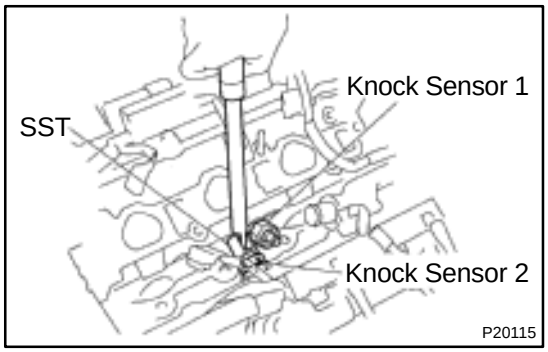

4. **REMOVE KNOCK SENSORS**

(a) Disconnect the knock sensor connector.

(b) Using SST, remove the knock sensor.
SST 09817–16011

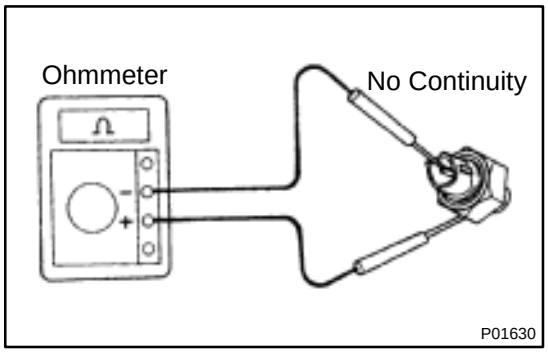

5. **INSPECT KNOCK SENSORS**

Using an ohmmeter, check that there is no continuity between the terminal and body.
If there is continuity, replace the sensor.

6. **REINSTALL KNOCK SENSORS**

(a) Using SST, install the knock sensor.
SST 09817–16011
Torque: 39 N·m (400 kgf·cm, 29 ft·lbf)

(b) Connect the knock sensor connector.

7. **REINSTALL WATER OUTLET AND INTAKE MANIFOLD ASSEMBLY (See page EM–57)**
8. **REINSTALL RH ENGINE MOUNTING STAY**
9. **REINSTALL AIR CLEANER HOSE**

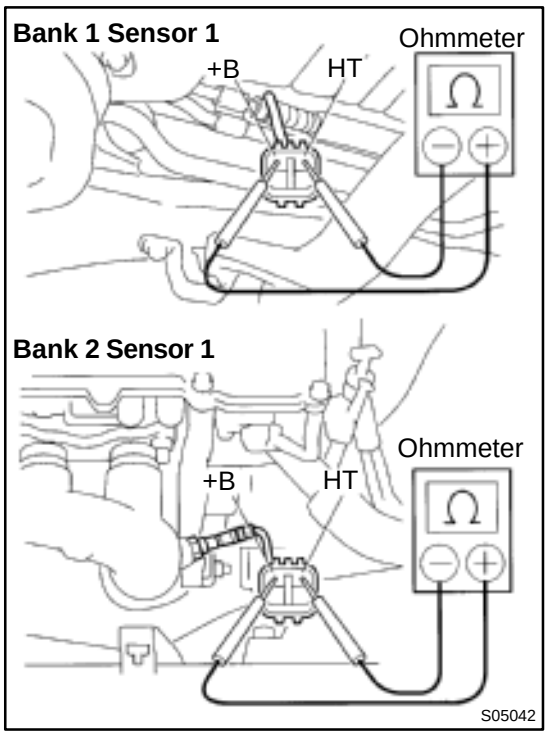

AIR–FUEL RATIO (A/F) SENSOR (California A/T)

SF08M–06

INSPECTION

INSPECT HEATER RESISTANCE OF A/F SENSORS (Bank 1 sensor 1, Bank 2 Sensor 1)

(a) Disconnect the A/F sensor connector.

(b) Using an ohmmeter measure the resistance between terminals +B and HT.

Resistance:

At 20˚C (68˚F)	0.8 – 1.4 Ω
At 800˚C (1,472˚F)	1.8 – 3.2 Ω

If the resistance is not as specified, replace the sensor.

Torque: 44 N·m (440 kgf·cm, 31 ft·lbf)

(c) Reconnect the A/F sensor connector.

EXHAUST GAS RECIRCULATION (EGR) GAS TEMPERATURE SENSOR

SF08N–03

COMPONENTS

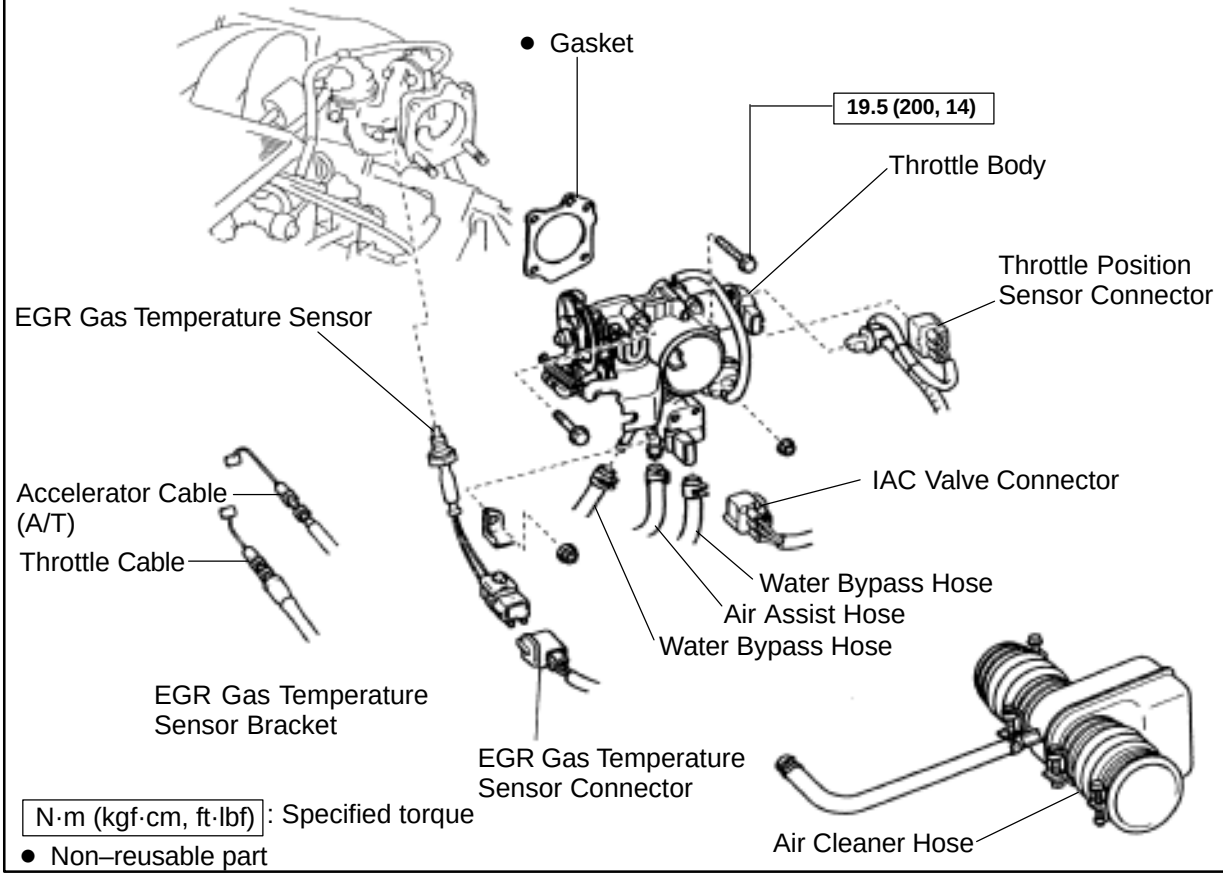

SF08O–04

INSPECTION

1. REMOVE THROTTLE BODY (See page SF–39)

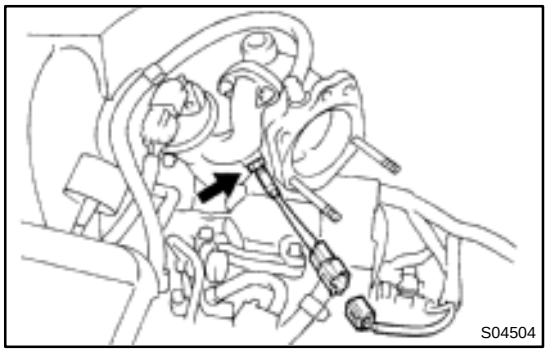

2. REMOVE EGR GAS TEMPERATURE SENSOR

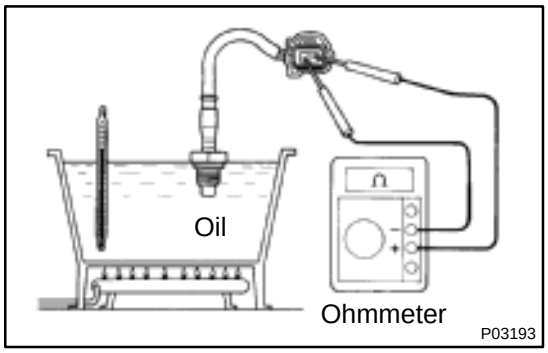

3. INSPECT EGR GAS TEMPERATURE SENSOR

Using an ohmmeter, measure the resistance between the terminals.

Resistance:

At 50˚C (122˚F)	64 – 97 kΩ
At 100˚C (212˚F)	11 – 16 kΩ
At 150˚C (302˚F)	2 – 4 kΩ

If the resistance is not as specified, replace the sensor.

4. REINSTALL EGR GAS TEMPERATURE SENSOR

5. REINSTALL THROTTLE BODY (See page SF–41)

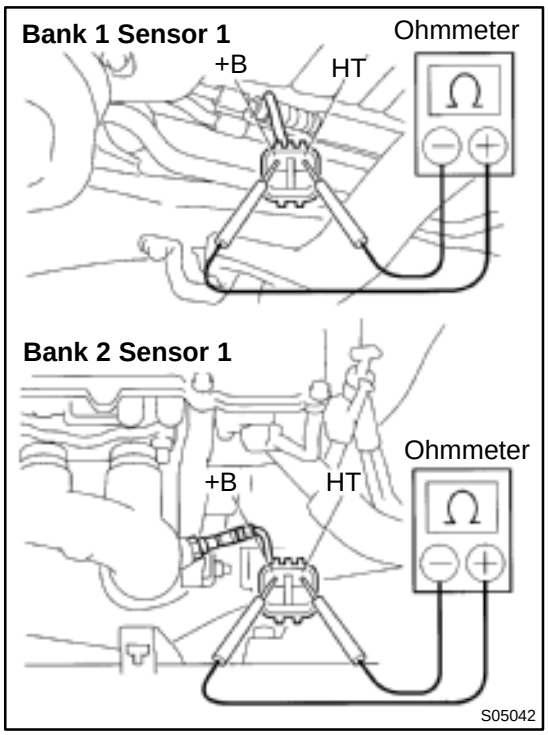

HEATED OXYGEN SENSOR (Bank 1,2 Sensor 1)

SF08P–04

INSPECTION

Except California A/T:

INSPECT HEATER RESISTANCE OF HEATED OXYGEN SENSORS (Bank 1 Sensor 1, Bank 2 Sensor 1)

(a) Disconnect the oxygen sensor connector.

(b) Using an ohmmeter, measure the resistance between the terminals +B and HT.

Resistance:

At 20˚C (68˚F)	11 – 16 Ω
At 800˚C (1,472˚F)	23 – 32 Ω

If the resistance is not as specified, replace the sensor.

Torque: 44 N·m (450 kgf·cm, 32 ft·lbf)

(c) Reconnect the oxygen sensor connector.

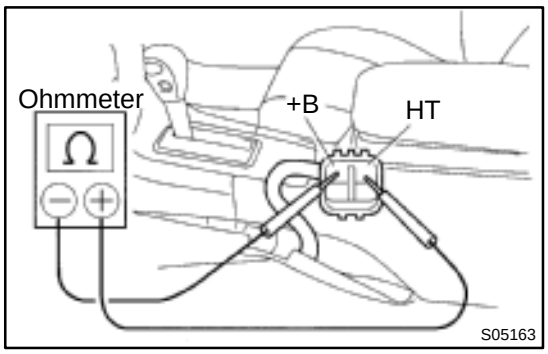

HEATED OXYGEN SENSOR (Bank 1 Sensor 2)

SF08Q–03

INSPECTION

INSPECT HEATER RESISTANCE OF HEATED OXYGEN SENSOR (Bank 1 Sensor 2)

(a) Remove the driver's seat.
(b) Take out the floor carpet.
(c) Disconnect the oxygen sensor connector.
(d) Using an ohmmeter, measure the resistance between the terminals +B and HT.

Resistance:

At 20˚C (68˚F)	11 – 16 Ω
At 800˚C (1,472˚F)	23 – 32 Ω

If the resistance is not as specified, replace the sensor.

(e) Reconnect the oxygen sensor connector.
Torque: 44 N·m (450 kgf·cm, 32 ft·lbf)
(f) Reinstall the floor carpet.
(g) Reinstall the driver's seat.

ENGINE CONTROL MODULE (ECM)

COMPONENTS

SF08R–03

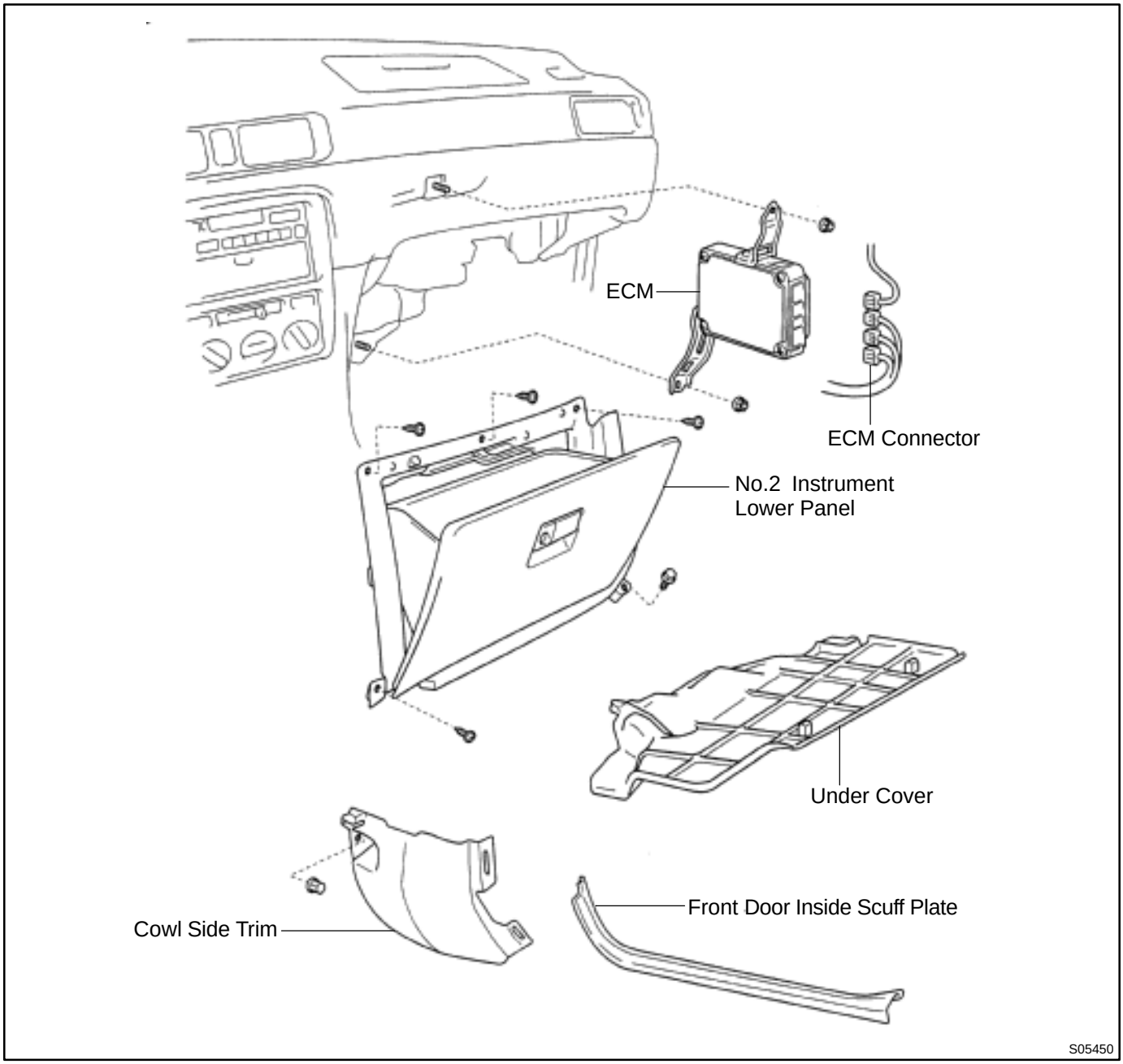

SF08S–01

INSPECTION

1. REMOVE ECM
2. INSPECT ECM (See page DI–218)
3. REINSTALL ECM

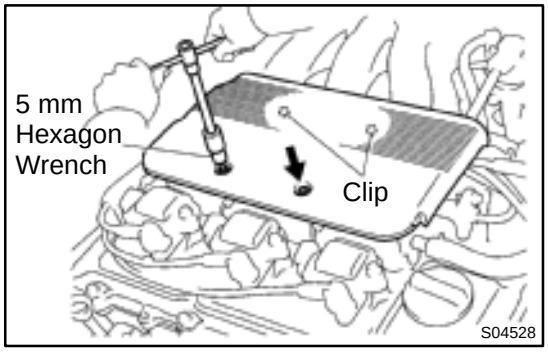

FUEL CUT RPM

SF08T–03

INSPECTION

1. REMOVE V–BANK COVER

(a) Using a 5 mm hexagon wrench, remove the 2 cap nuts.

(b) Disconnect the 2 clips, and remove the V–bank cover.

2. WARM UP ENGINE

Allow the engine to warm up to normal operating temperature.

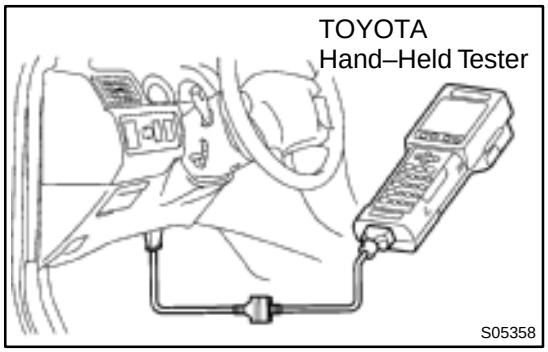

3. CONNECT TOYOTA HAND–HELD TESTER OR OBDII SCAN TOOL

(a) Connect the TOYOTA hand–held tester or OBDII scan tool to the DLC3.

(b) Please refer to the TOYOTA hand–held tester or OBDII scan tool operator's manual for further details.

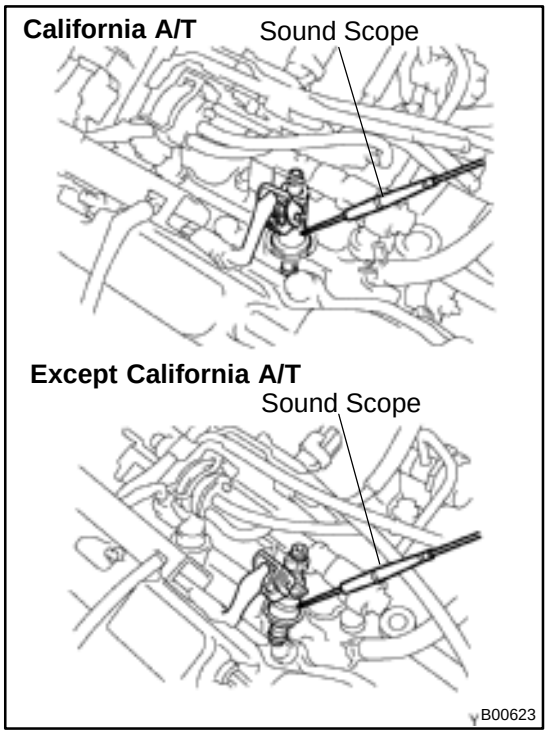

4. INSPECT FUEL CUT OFF PRM

(a) Increase the engine speed to at least 3,500 rpm.

(b) Use a sound scope to check for injector operating noise.

(c) Check that when the throttle lever is released, injector operation noise stops momentarily and then resumes.

HINT:

Measure with the A/C OFF.

Fuel return rpm: 1,200 rpm

5. DISCONNECT TOYOTA HAND–HELD TESTER OR OBDII SCAN TOOL

6. REINSTALL V–BANK COVER

HINT:

For fixing the V–bank cover, push on the cover until a "click" is felt.

SRS AIRBAG

RS01Y–22

PRECAUTION

NOTICE:

- **The CAMRY is equipped with SRS, which comprises a driver airbag, front passenger airbag, and side airbag. Failure to carry out service operations in the correct sequence could cause the SRS to unexpectedly deploy during servicing, possibly leading to a serious accident. Further, if a mistake is made in servicing the SRS, it is possible that the SRS may fail to operate when required. Before performing servicing (including removal or installation of parts, inspection or replacement), be sure to read the following items carefully, then follow the correct procedures described in the repair manual.**
- **Malfunction symptoms of the SRS are difficult to confirm, so the DTCs become the most important source of information when troubleshooting. When troubleshooting the SRS, always inspect the DTCs before disconnecting the battery.**
- **Even in cases of a minor collision where the SRS does not deploy, the steering wheel pad, front passenger airbag assembly, side airbag assembly (TMC made and TMMK made), airbag sensor assembly, front airbag sensor and side airbag sensor assembly should be inspected.**
  (See page RS–16, RS–29, RS–41, RS–54, RS–60, RS–65 and RS–70)
- **Never use SRS parts from another vehicle. When replacing parts, replace them with new parts.**
- **Never disassemble and repair the steering wheel pad, front passenger airbag assembly, side airbag assembly, airbag sensor assembly, front airbag sensor or side airbag sensor assembly in order to reuse it.**
- **If the steering wheel pad, front passenger airbag assembly, side airbag assembly, airbag sensor assembly, front airbag sensor or side airbag sensor assembly has been dropped, or if there are cracks, dents or other defects in the case, bracket or connector, replace them with new ones.**
- **Use a volt/ohmmeter with high impedance (10 kΩ/V minimum) for troubleshooting the system's electrical circuits.**
- **Information labels are attached to the periphery of the SRS components. Follow the instructions on the notices.**
- **After work on the SRS is completed, perform the SRS warning light check (See page DI–626).**
- **If the vehicle is equipped with a mobile communication system, refer to the precaution in the IN section.**

CAUTION:

- **Work must be started 90 seconds after the ignition switch is turned to the "LOCK" position and the negative (–) terminal cable is disconnected from the battery.**
  (The SRS is equipped with a back–up power source so that if work is started within 90 seconds from disconnecting the negative (–) terminal cable of the battery, the SRS may be deployed.)
- **When the negative (–) terminal cable is disconnected from the battery, the memory of the clock and audio system will be canceled. So before starting work, make a record of the contents memorized in the audio memory system. When work is finished, reset the audio systems as they were before and adjust the clock. To avoid erasing the memory in each memory system, never use a back– up power supply from outside the vehicle.**
- **Before repairs, remove the airbag sensor if shocks are likely to be applied to the sensor during repairs.**
- **Do not expose the steering wheel pad, front passenger airbag assembly, side airbag assembly, airbag sensor assembly, front airbag sensor or side airbag sensor assembly directly to hot air or flames.**

RS0ET–01

OPERATION

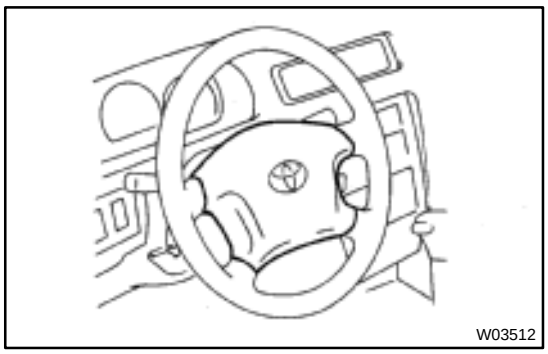
W03512

1. STEERING WHEEL PAD (with AIRBAG)

The inflater and bag of the SRS are stored in the steering wheel pad and cannot be disassembled. The inflater contains a squib, igniter charge, gas generant, etc., and inflates the bag when instructed by the airbag sensor assembly.

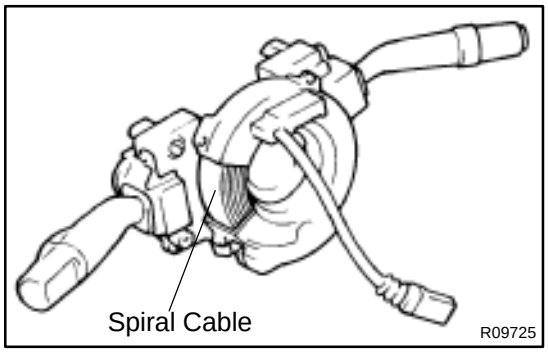

R09725

2. SPIRAL CABLE (in COMBINATION SWITCH)

A spiral cable is used as an electrical joint from the vehicle body side to the steering wheel.

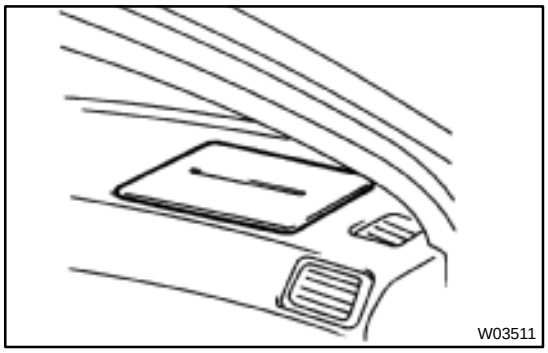
W03511

3. FRONT PASSENGER AIRBAG ASSEMBLY

The inflater and bag of the SRS are stored in the front passenger airbag assembly and cannot be disassembled. The inflater contains a squib, igniter charge and gas generant, etc., and inflates the bag when instructed by the airbag sensor assembly.

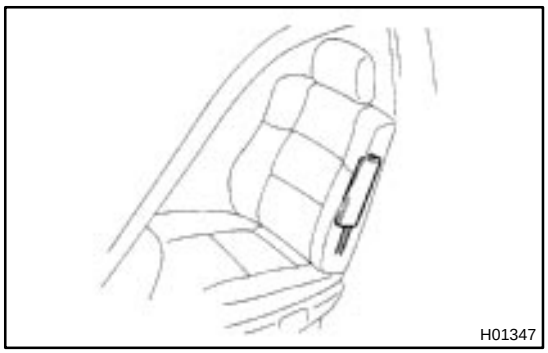
H01347

4. SIDE AIRBAG ASSEMBLY

The inflater and bag of the SRS side airbag are stored in the side airbag assembly and cannot be disassembled. The inflater contains a squib, igniter charge and gas generant, etc., and inflates the bag when instructed by the side airbag sensor assembly.

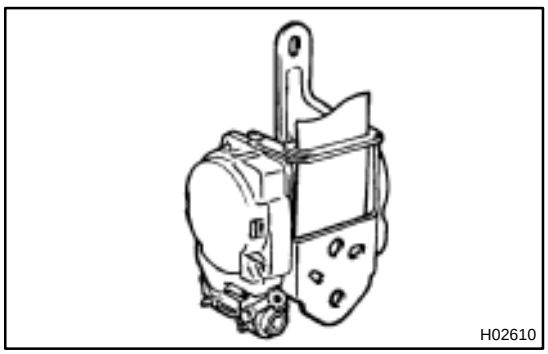
H02610

5. SEAT BELT PRETENSIONER

The seat belt pretensioner system is a component of the front seat outer belt. The pretensioner contains a squib, gas generant, wire, piston, etc., and operates in the event of a frontal collision.

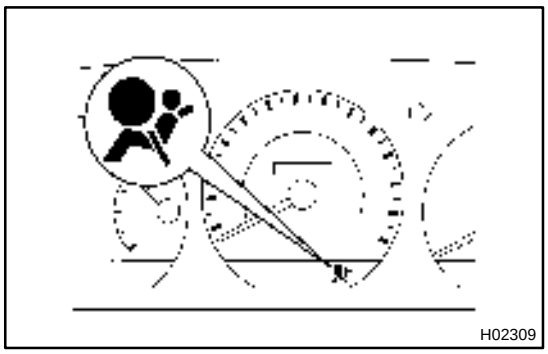

6. SRS WARNING LIGHT

The SRS warning light is located on the combination meter. It goes on to alert the driver of trouble in the system when a malfunction is detected in the airbag sensor assembly self–diagnosis. In normal operation conditions when the ignition switch is turned to the ACC or ON position, the light goes on for about 6 seconds and then goes off.

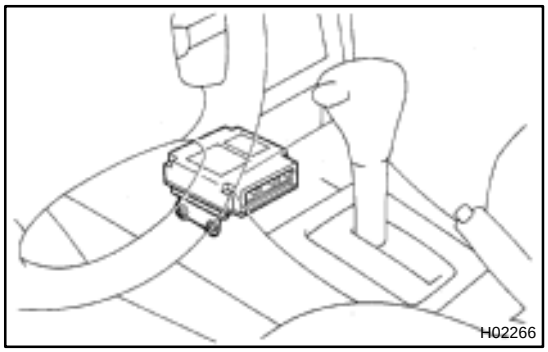

7. AIRBAG SENSOR ASSEMBLY

The airbag sensor assembly is mounted on the floor inside the lower center finish panel. The airbag sensor assembly consists of an airbag sensor, safing sensor, diagnosis circuit, ignition control and drive circuit, etc. It receives signals from the airbag sensor and judges whether the SRS must be activated or not.

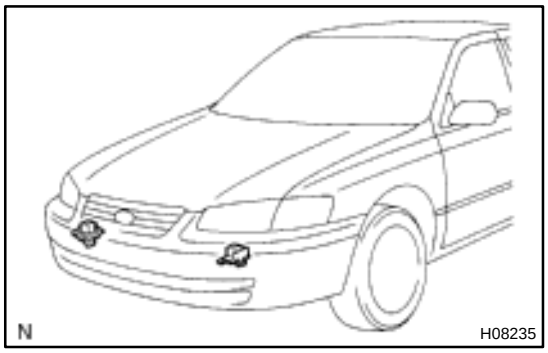

8. FRONT AIRBAG SENSOR

A front airbag sensor is mounted inside each of the side members. The sensor unit is a mechanical type. When the sensor detects deceleration force above a predetermined limit, contact is made in the sensor, sending a signal to the airbag sensor assembly. The sensor cannot be disassembled.

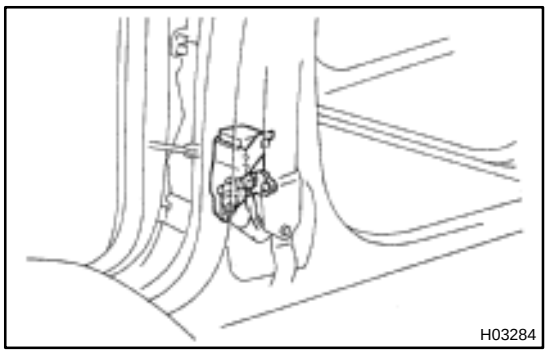

9. SIDE AIRBAG SENSOR ASSEMBLY

The side airbag sensor assembly is mounted in the LH and RH center pillars. The side airbag sensor assembly consists of a lateral deceleration sensor, safing sensor and diagnosis circuit, etc. It receives signals to the airbag sensor assembly to judge from the side airbag sensors whether the SRS side airbag must be activated or not.

10. TMC made:
SRS CONNECTORS

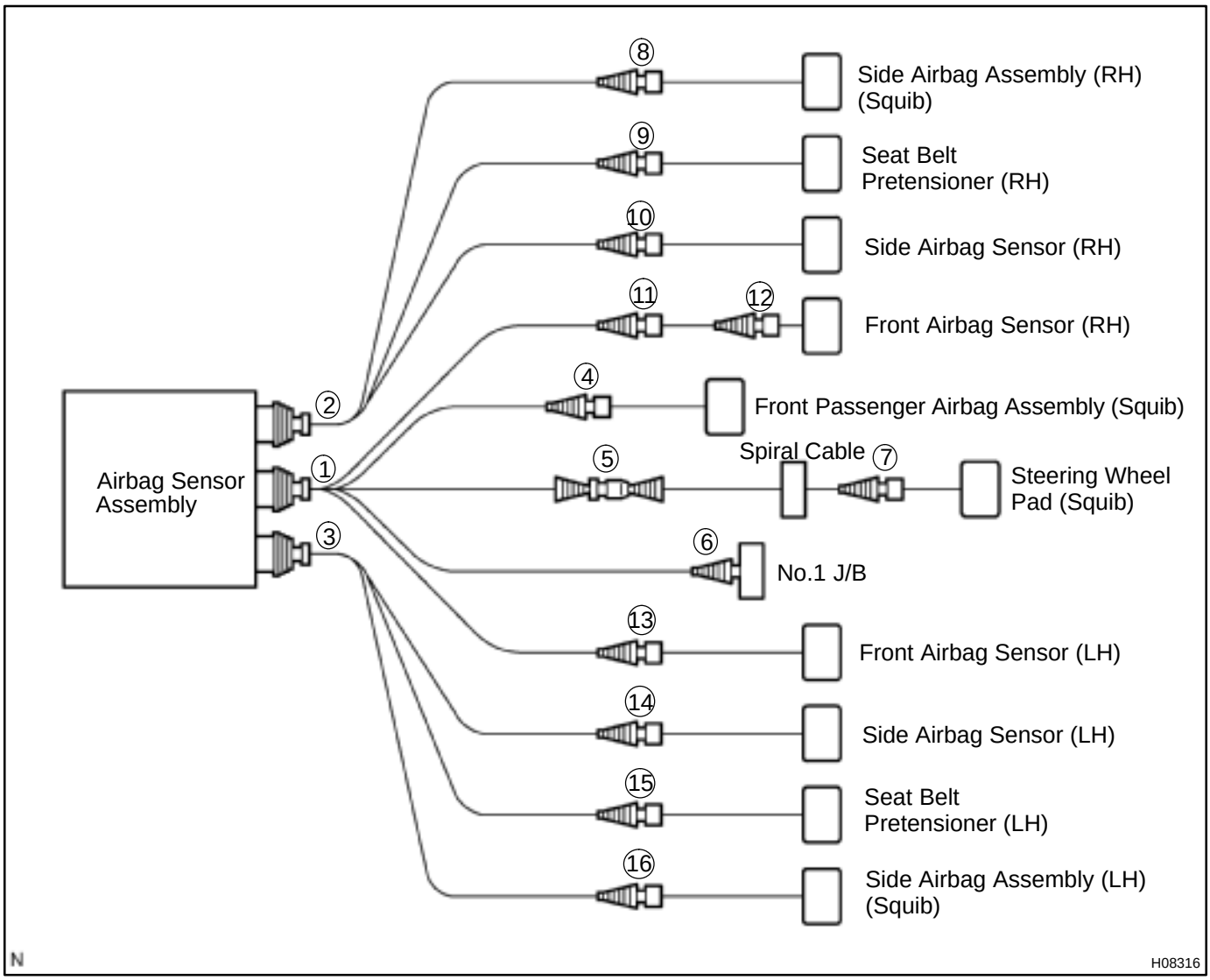

No.	Item	Application
(1)	Terminal Twin–Lock Mechanism	Connectors 1, 2, 3, 4, 5, 6, 7, 8, 9, 10, 11, 12, 13, 14, 15, 16
(2)	Airbag Activation Prevention Mechanism	Connectors 1, 2, 3, 4, 5, 7, 8, 9, 15, 16
(3)	Electrical Connection Check Mechanism	Connectors 1, 2, 3
(4)	Connector Twin–Lock Mechanism	Connectors 5, 6, 7

11. TMMK made: SRS CONNECTORS

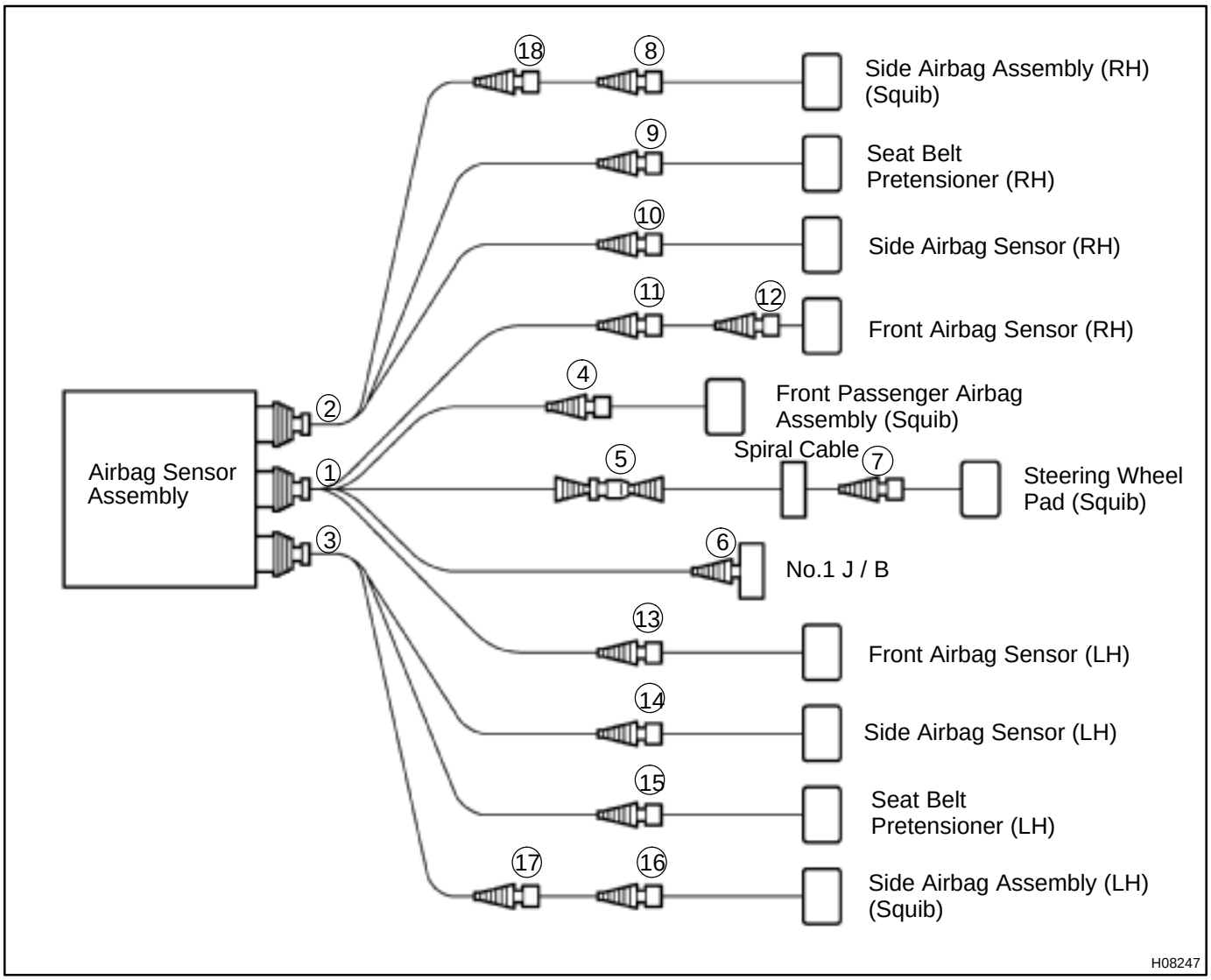

No.	Item	Application
(1)	Terminal Twin–Lock Mechanism	Connectors 1, 2, 3, 4, 5, 6, 7, 8, 9, 10, 11, 12, 13, 14, 15, 16, 17, 18
(2)	Airbag Activation Prevention Mechanism	Connectors 1, 2, 3, 4, 5, 7, 8, 9, 15, 16, 17, 18
(3)	Electrical Connection Check Mechanism	Connectors 1, 2, 3
(4)	Connector Twin–Lock Mechanism	Connectors 5, 6, 7

(a) All connectors in the SRS are colored in yellow to distinguish them from other connectors. Connectors having special functions and specifically designed for the SRS are used in the locations shown on the previous page to ensure high reliability. These connectors use durable gold–plated terminals.

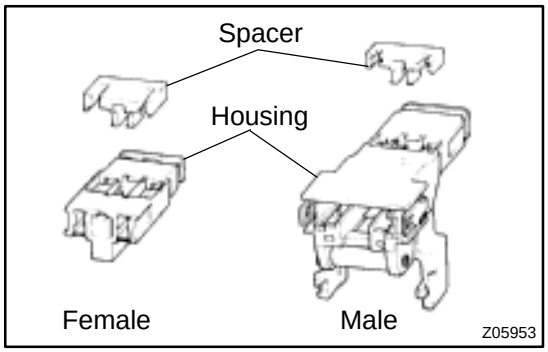

(1) Terminal twin–lock mechanism
Each connector has a two–piece component consisting of a housing and a spacer. This design enables the terminal to be locked securely by two locking devices (the retainer and the lance) to prevent terminals from coming out.

(2) Airbag activation prevention mechanism
Each connector contains a short spring plate. When the connector is disconnected, the short spring plate automatically connects positive (+) terminal and negative (–) terminal of the squib.

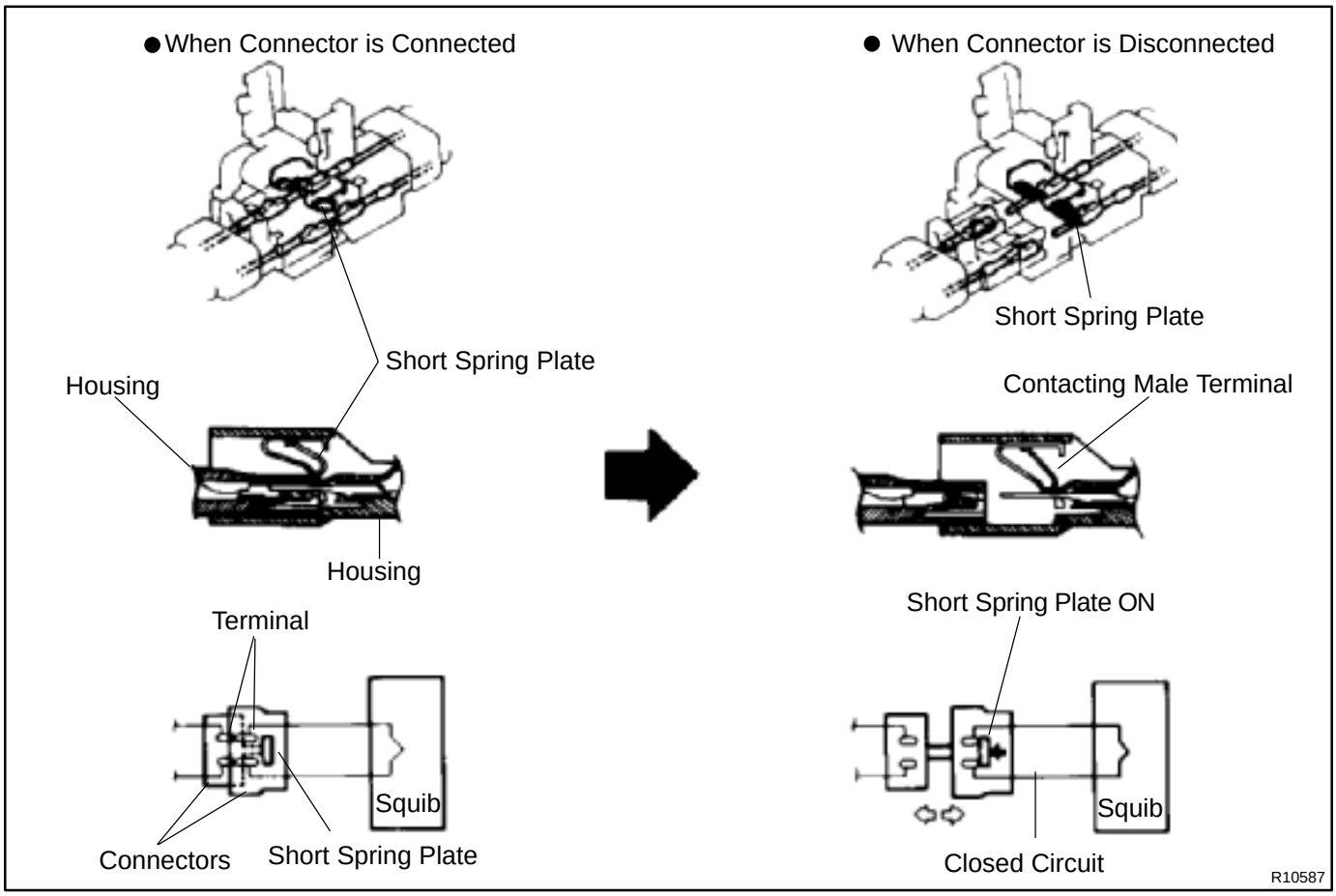

HINT:
The type of connector is shown in the diagram on the previous page.

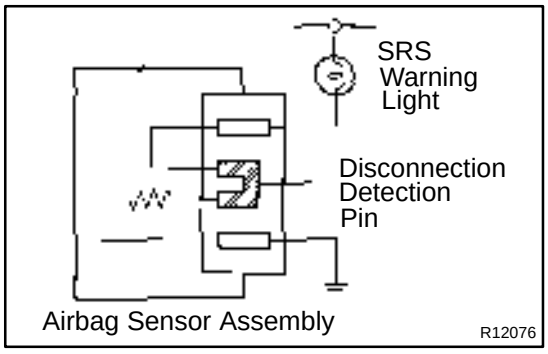

(3) Electrical connection check mechanism
This mechanism electrically checks that connectors are connected correctly and completely. The electrical connection check mechanism is designed so that the disconnection detection pin connects with the diagnosis terminals when the connector housing lock is locked.

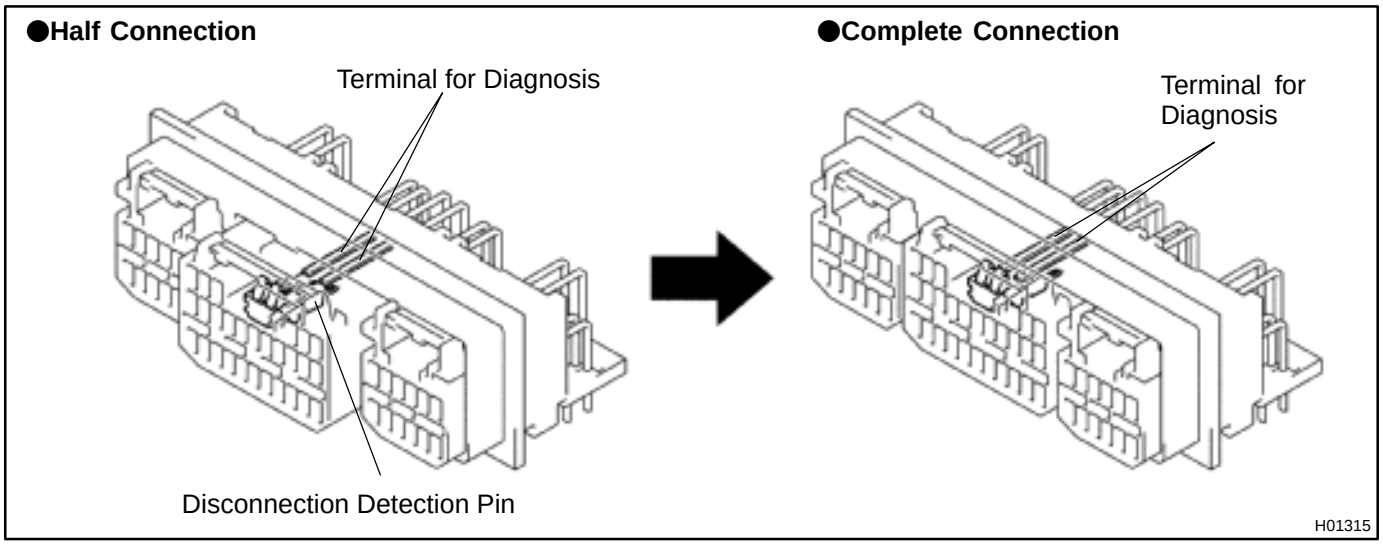

HINT:
The connectors shown in this illustration are connectors, ”1”, ”2” and ”3” in step 10 and 11.

(4) Connector twin–lock mechanism
With this mechanism connectors (male and female connectors) are locked by 2 locking devices to increase the connection reliability. If the primary lock is incomplete, ribs interfere and prevent the secondary lock.

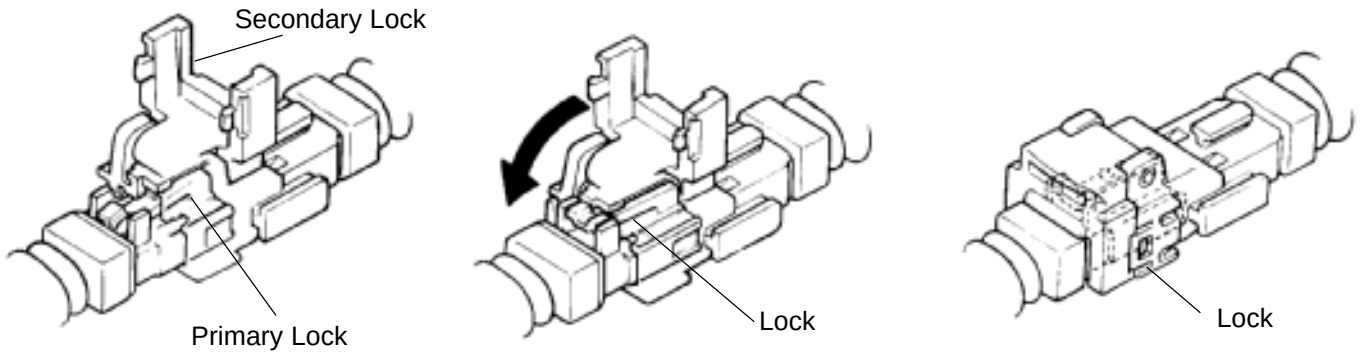

Primary Lock Incomplete (Secondary Lock Prevented)

Primary Lock Complete (Secondary Lock Permitted)

Twin–Lock Completed

AB0089



Fig.1

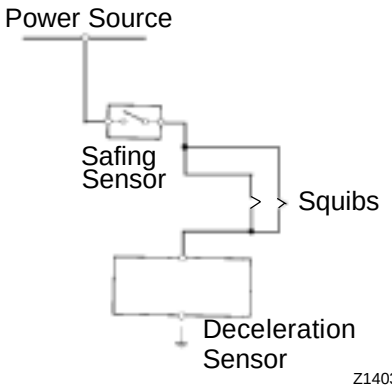

Fig.2

Z14034

(b) When the vehicle is involved in a frontal collision in the hatched area (Fig. 1) and the shock is larger than the predetermined level, the SRS is activated automatically. A safing sensor is designed to go on at a smaller deceleration rate than the airbag sensor. As illustrated in Fig. 2, ignition is caused when current flows to the squib, which happens when a safing sensor and the deceleration sensor go on simultaneously. When a deceleration force acts on the sensors, 2 squibs in the driver airbag and front passenger airbag ignite and generate gas. The gas discharging into the driver airbag and front passenger airbag rapidly increases the pressure inside the bags, breaking open the steering wheel pad and instrument panel door. Bag inflation then ends, and the bags deflate as the gas is discharged through discharge holes at the bag's rear or side.

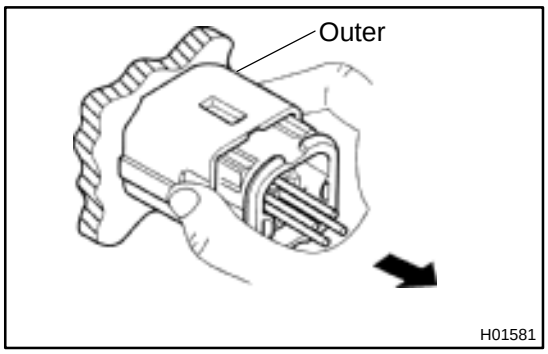

12. DISCONNECTION OF FRONT AIRBAG SENSOR AND SIDE AIRBAG SENSOR CONNECTOR

(a) While holding both flank sides of the outer, slide the outer to the direction shown by an arrow.

(b) Lock of the connectors is released, then disconnect the connectors.

HINT:

Make sure to hold both flank sides of the outer. If holding the top and bottom sides, it will obstruct disconnection.

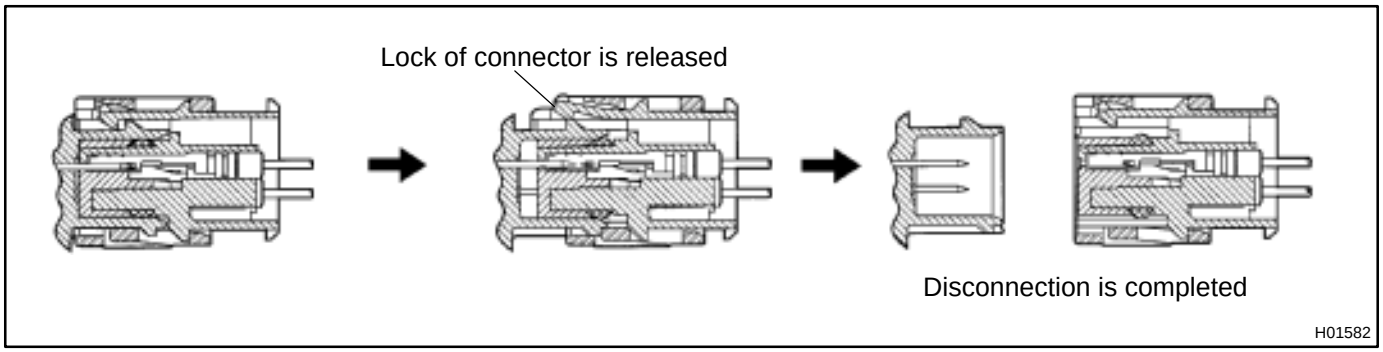

13. CONNECTION OF FRONT AIRBAG SENSOR AND SIDE AIRBAG SENSOR CONNECTOR

(a) Align the male connector (of the side of sensor) and female connector in the same direction as shown in the illustration and fit in them without rubbing.

(b) As they are fitted in, the outer slides rearward. Press it until the outer returns to its original position again.

If fitting stops half way, connectors will separate.

(c) Make sure to insert until they are locked. After fitting in, pull them slightly to check that they are locked. (When locked, make sure that the outer returns to its original position and sound at the time of fitting in can be heard.)

HINT:

Do not fit in while holding the outer.

When fitting in, the outer slides. Do not touch it.

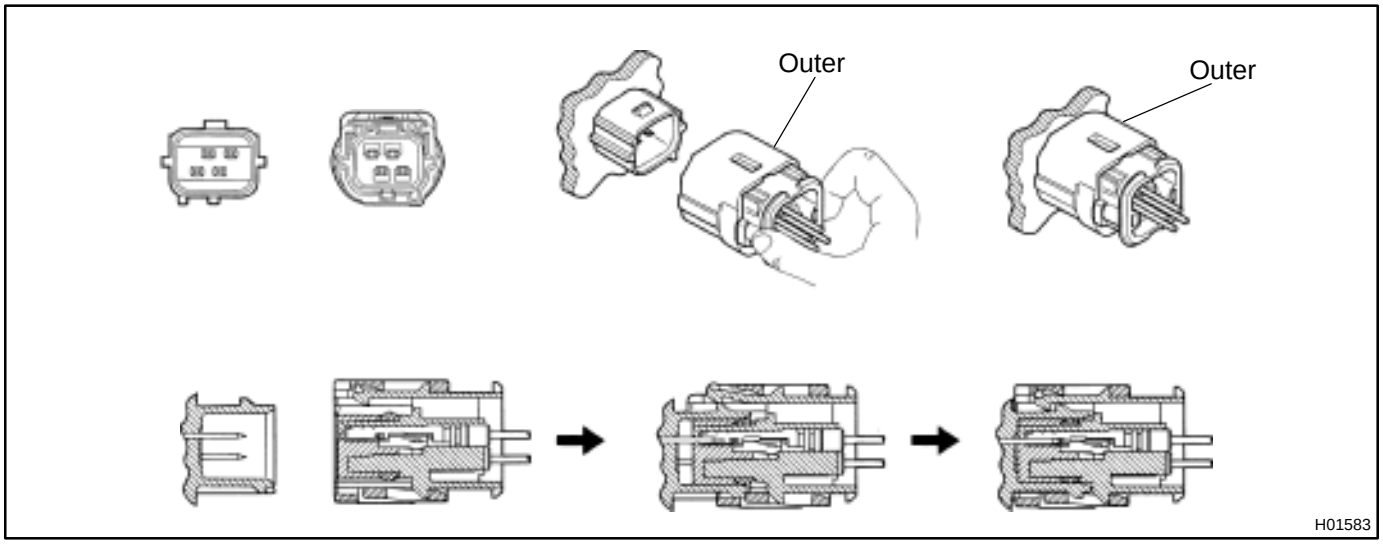

14. DISCONNECTION OF SIDE AIRBAG CONNECTOR

(a) Place a finger on the slider.
(b) Slide the slider to release lock.
(c) Disconnect the connector.

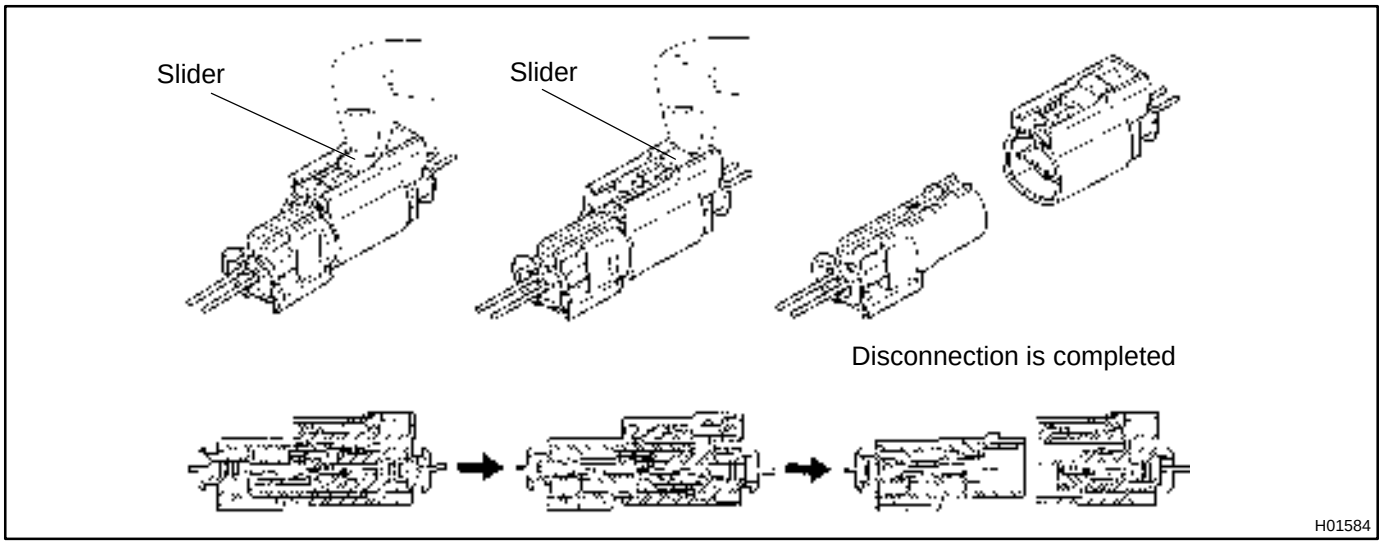

15. CONNECTION OF SIDE AIRBAG CONNECTOR

(a) Align a lock part of male connector and a slider of female connector in the same direction as shown in the illustration, fit in them without rubbing.

(b) Make sure to insert until they are locked. After fitting in pull them slightly to check that they are locked. (When locked, make sure that the outer returns to its original position and sound at the time of fitting in can be heard.)

HINT:

As the slider slides, do not touch it.

Be careful not to deform the release board. If the release board is deformed, replace it with a new one.

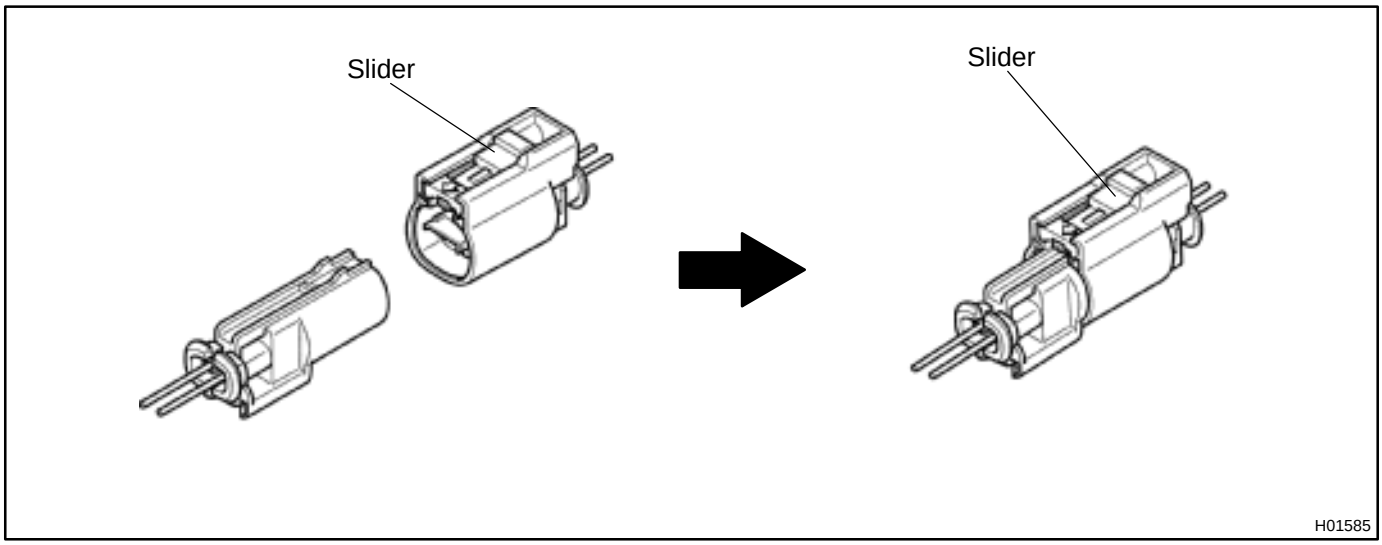

16. DISCONNECTION OF CONNECTORS FOR FRONT PASSENGER AIRBAG ASSEMBLY

(a) Place a finger on the slider.
(b) Slide the slider to release lock.
(c) Disconnect the connector.

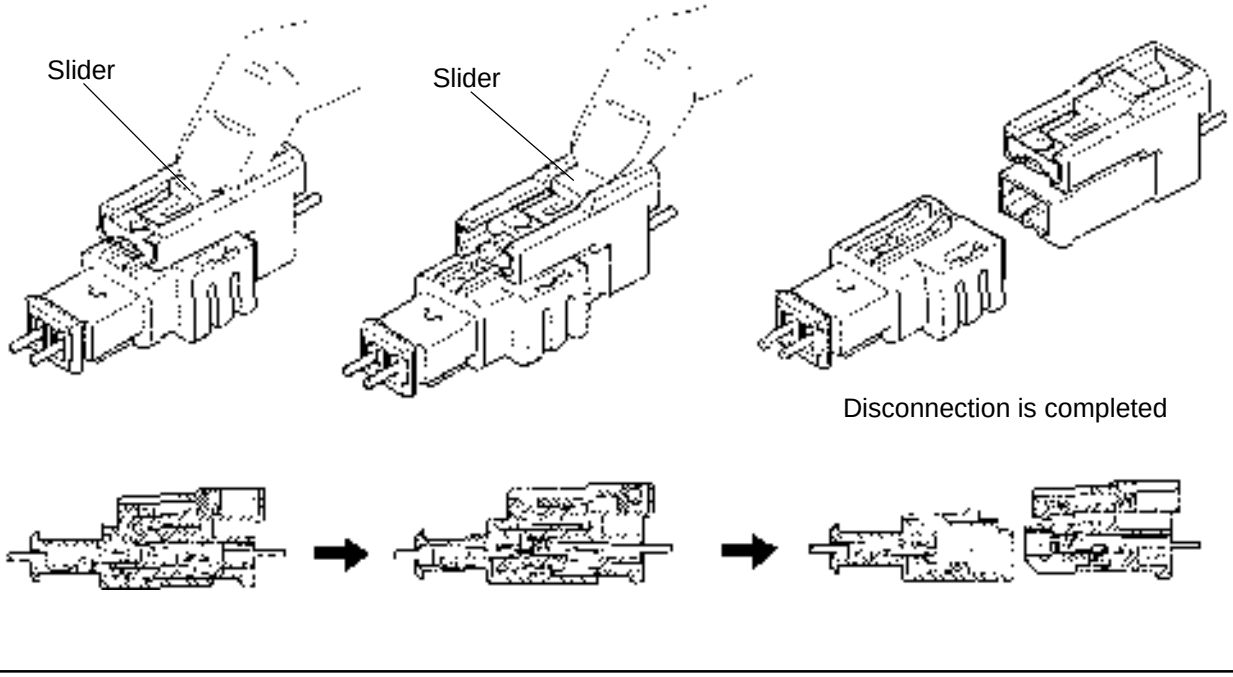

17. CONNECTION OF CONNECTORS FOR FRONT PASSENGER AIRBAG ASSEMBLY

(a) Align a lock part of male connector and a slider of female connector in the same direction as shown in the illustration, fit in them without rubbing.

(b) Make sure to insert until they are locked. After fitting in pull them slightly to check that they are locked. (When locked, make sure that the outer returns to its original position and sound at the time of fitting in can be heard.)

HINT:

As the slider slides, do not touch it.

Be careful not to deform the release board. If the release board is deformed, replace it with a new one.

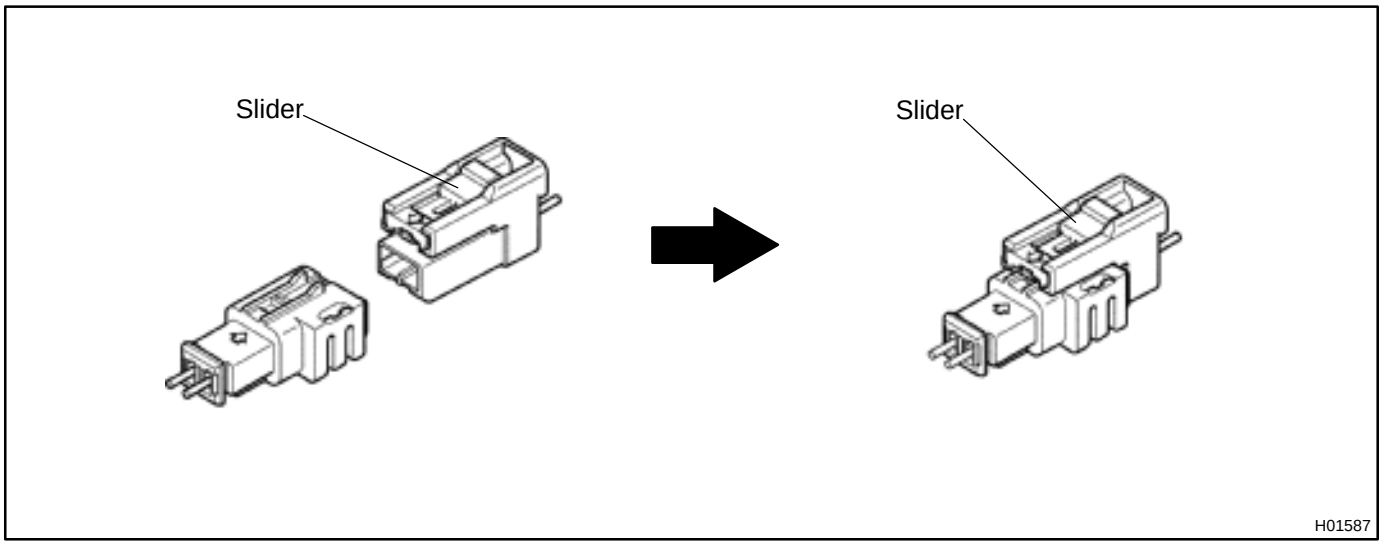

STEERING WHEEL PAD AND SPIRAL CABLE

RS00Y–20

COMPONENTS

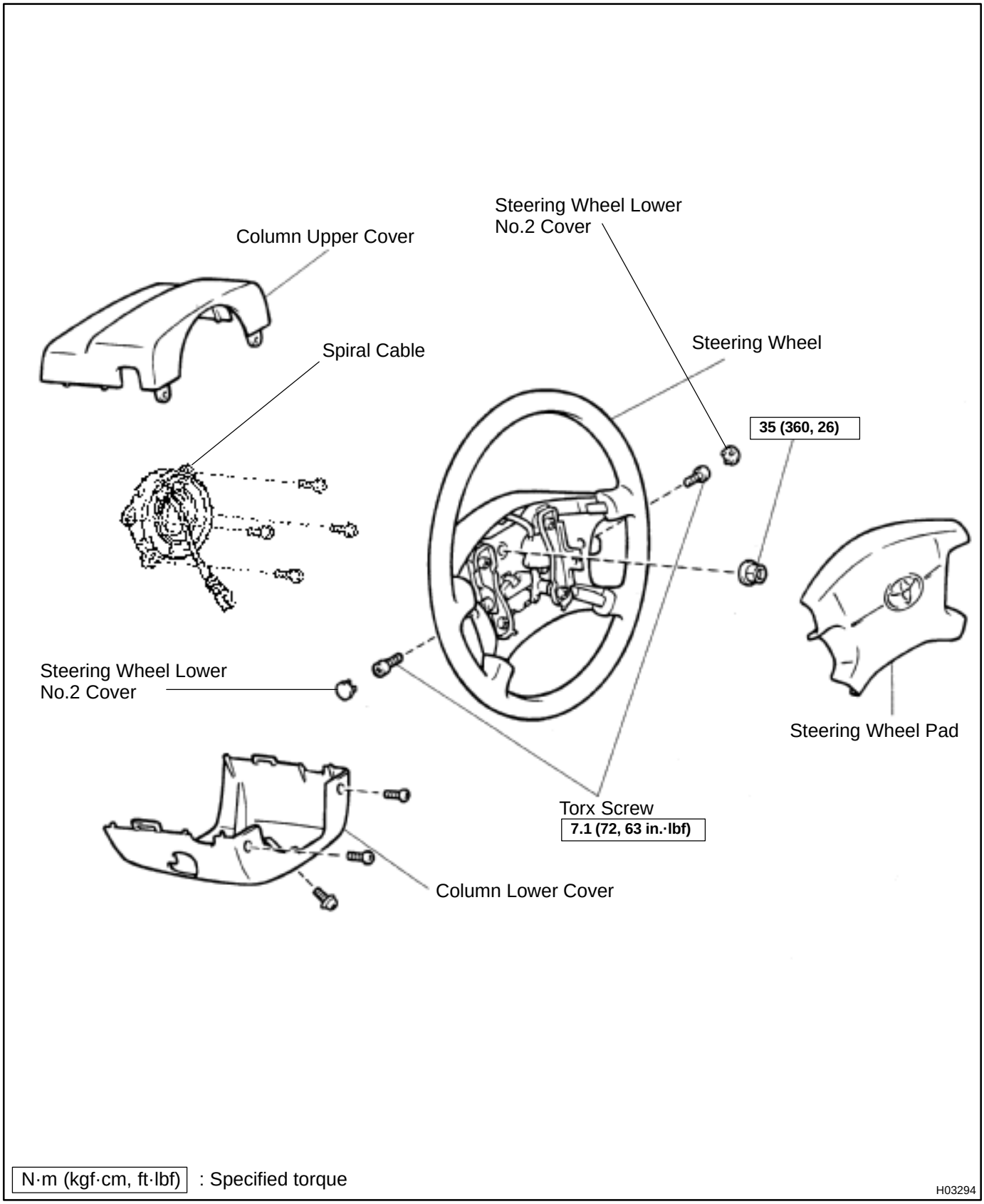

N·m (kgf·cm, ft·lbf) : Specified torque

H03294

RS00Z–14

REMOVAL

HINT:

For step 1 to 4, refer to page SR–11.

1. **REMOVE STEERING WHEEL PAD**
2. **REMOVE STEERING WHEEL**
3. **REMOVE UPPER AND LOWER COLUMN COVERS**
4. **REMOVE SPIRAL CABLE**

RS010–19

INSPECTION

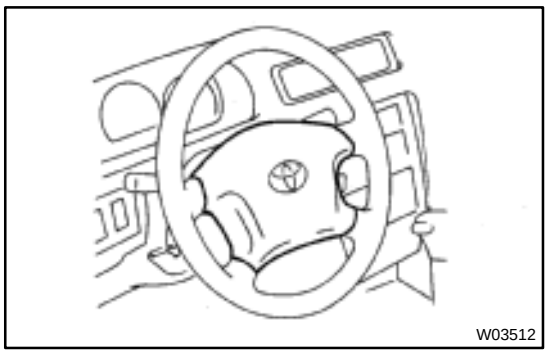

1. VEHICLE NOT INVOLVED IN COLLISION

(a) Do a diagnostic system check.
(See page DI–626)

(b) Do a visual check which includes the following items with the steering wheel pad (with airbag) installed in the vehicle.
Check cuts, minute cracks or marked discoloration on the steering wheel pad top surface and in the grooved portion.

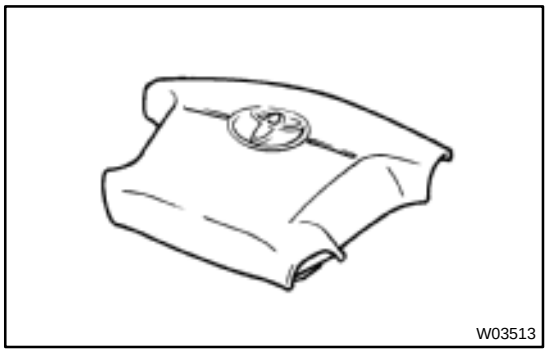

2. VEHICLE INVOLVED IN COLLISION AND AIRBAG IS NOT DEPLOYED

(a) Do a diagnostic system check.
(See page DI–626)

(b) Do a visual check which includes the following items with the steering wheel pad (with airbag) removed from the vehicle.

- Check cuts, minute cracks or marked discoloration on the steering wheel pad top surface and in the grooved portion.
- Check cuts and cracks in wire harnesses, and chipping in connectors.
- Check the deformation of the horn button contact plate on the steering wheel.

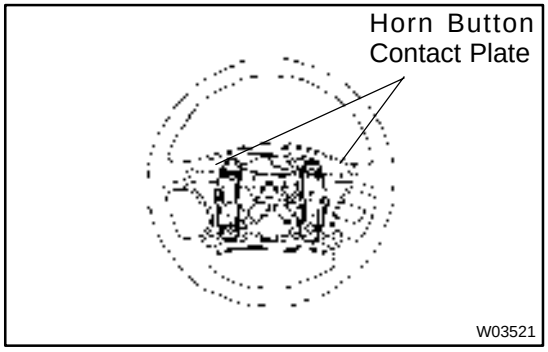

HINT:

- If the horn button contact plate of the steering wheel is deformed, never repair it. Always replace the steering wheel assembly with a new one.

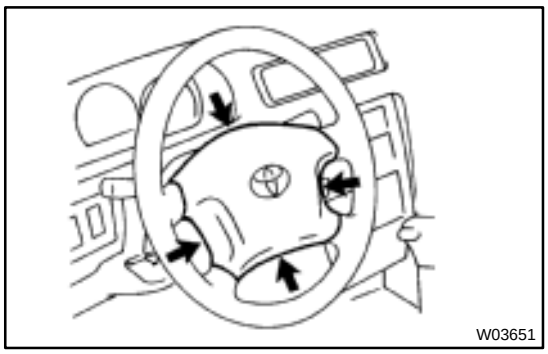
W03651

- There should be no interference between the steering wheel pad and steering wheel, and the clearance should be uniform all the way around when the new steering wheel pad is installed on the steering wheel.

CAUTION:
For removal and installation of the steering wheel pad, see page SR–11 and SR–16, and be sure to follow the correct procedure.

3. VEHICLE INVOLVED IN COLLISION AND AIRBAG IS DEPLOYED

(a) Do a diagnostic system check.
(See page DI–626)

(b) Do a visual check which includes the following items with the steering wheel pad (with airbag) removed from the vehicle.
- Check the deformation on the horn button contact plate of the steering wheel.
- Check the damage on the spiral cable connector and wire harness.

HINT:
- If the horn button contact plate of the steering wheel is deformed, never repair it. Always replace the steering wheel assembly with a new one.
- There should be no interference between the steering wheel pad and steering wheel, and the clearance should be uniform all the way around when the new steering wheel pad is installed on the steering wheel.

RS011–19

DISPOSAL

HINT:

When scrapping vehicle equipped with an SRS or disposing of a steering wheel pad (with airbag), always first deploy the airbag in accordance with the procedure described below. If any abnormality occurs with the airbag deployment, contact the SERVICE DEPT. of TOYOTA MOTOR SALES, U.S.A., INC. When disposing of a steering wheel pad with an airbag deployed in a collision, follow the same procedure given in step 1–(d) in ”DISPOSAL”.

CAUTION:

- **Never dispose of a steering wheel pad which has an undeployed airbag.**
- **The airbag produces a sizeable exploding sound when it deploys, so perform the operation out–of–doors and where it will not create a nuisance to nearby residents.**



- **When deploying the airbag, always use the specified SST (SRS Airbag Deployment Tool). Perform the operation in a place away from electrical noise.**
  SST 09082–00700
- **When deploying an airbag, perform the operation at least 10 m (33 ft) away from the steering wheel pad.**
- **The steering wheel pad is very hot when the airbag is deployed, so leave it alone for at least 30 minutes after deployment.**
- **Use gloves and safety glasses when handling a steering wheel pad with the deployed airbag.**
- **Always wash your hands with water after completing the operation.**
- **Do not apply water, etc. to a steering wheel pad with the deployed airbag.**

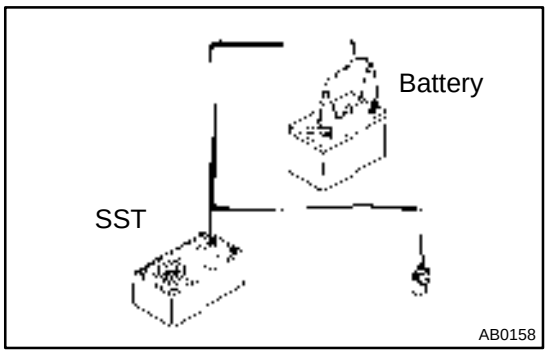

1. AIRBAG DEPLOYMENT WHEN SCRAPPING VEHICLE

HINT:
Have a battery ready as the power source to deploy the airbag.



(a) Check functioning of the SST.

CAUTION:
When deploying the airbag, always use the specified SST: SRS Airbag Deployment Tool.

SST 09082–00700

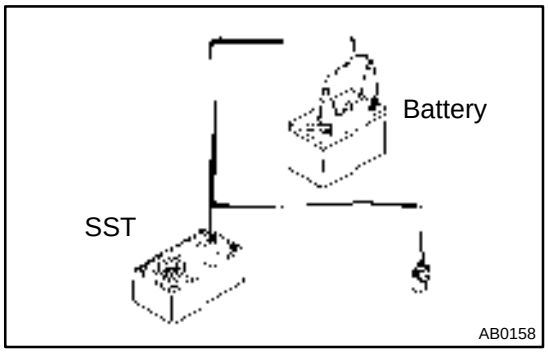

(1) Connect the SST to the battery.
Connect the red clip of the SST to the battery positive (+) terminal and the black clip to the battery negative (–) terminal.

HINT:
Do not connect the yellow connector which will be connected with the supplemental restraint system.

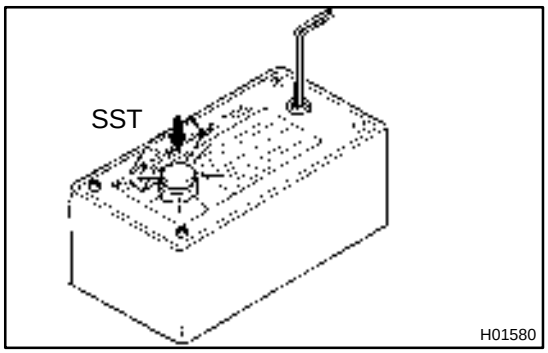

(2) Check functioning of the SST.
Press the SST activation switch, and check that the LED of the SST activation switch lights up.

CAUTION:
If the LED lights up when the activation switch is not being pressed, SST malfunction is probable, so definitely do not use the SST.

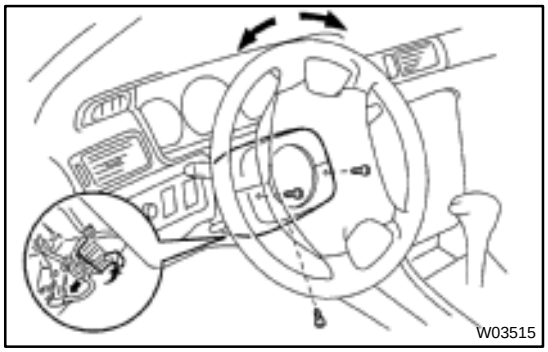

(b) Install the SST.

CAUTION:
Check that there is no looseness in the steering wheel and steering wheel pad.

(1) Remove the steering column lower cover.
Remove the 3 screws and steering column lower cover as shown in the illustration.

(2) Disconnect the airbag connector of the spiral cable.

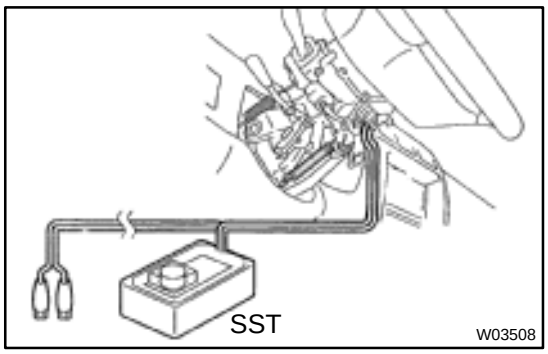

(3) Connect the SST connector to the airbag connector of the spiral cable.

SST 09082–00700

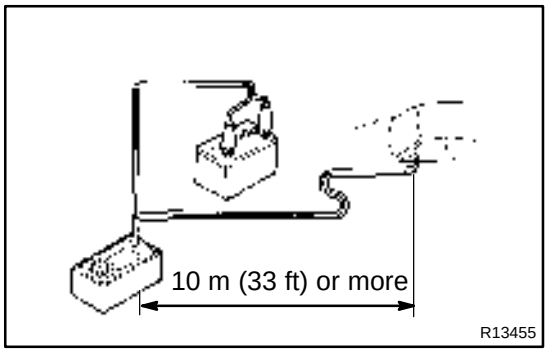

(4) Move the SST at least 10 m (33 ft) away from the front of the vehicle.

(5) Close all the doors and windows of the vehicle.

NOTICE:

Take care not to damage the SST wire harness.

(6) Connect the SST red clip to the battery positive (+) terminal and the black clip to the negative (–) terminal.

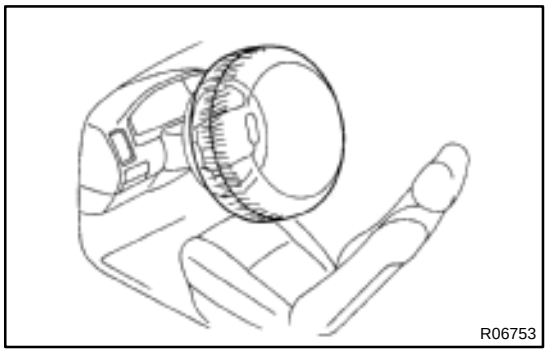

(c) Deploy the airbag.

(1) Confirm that no one is inside the vehicle or within 10 m (33 ft) area around the vehicle.

(2) Press the SST activation switch and deploy the airbag.

HINT:

The airbag deploys simultaneously as the LED of the SST activation switch lights up.

(d) Dispose of steering wheel pad (with airbag).

CAUTION:

- **The steering wheel pad is very hot when the airbag is deployed, so leave it alone for at least 30 minutes after deployment.**
- **Use gloves and safety glasses when handling a steering wheel pad with the deployed airbag.**
- **Always wash your hands with water after completing the operation.**
- **Do not apply water, etc. to a steering wheel pad with the deployed airbag.**

(1) When scrapping a vehicle, deploy the airbag and scrap the vehicle with the steering wheel pad still installed.

(2) When moving a vehicle for scrapping which has a steering wheel pad with deployed airbag, use gloves and safety glasses.

2. DEPLOYMENT WHEN DISPOSING OF STEERING WHEEL PAD ONLY

NOTICE:

- **When disposing of the steering wheel pad (with airbag) only, never use the customers vehicle to deploy the airbag.**
- **Be sure to follow the procedure given below when deploying the airbag.**

HINT:

Have a battery ready as the power source to deploy the airbag.

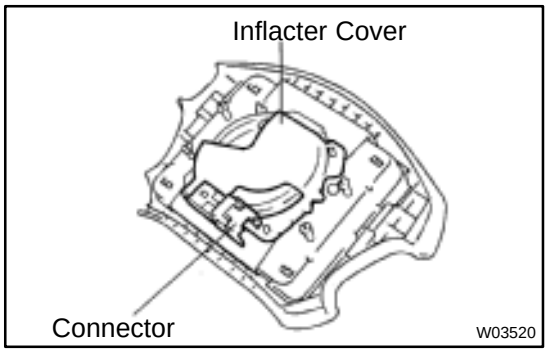

(a) Remove the steering wheel pad.
(See page SR–11)

CAUTION:

When storing the steering wheel pad, keep the upper surface of the pad facing upward.

(b) Remove the steering wheel pad connector.
Remove the connector on the rear surface of the steering wheel pad from the bracket.

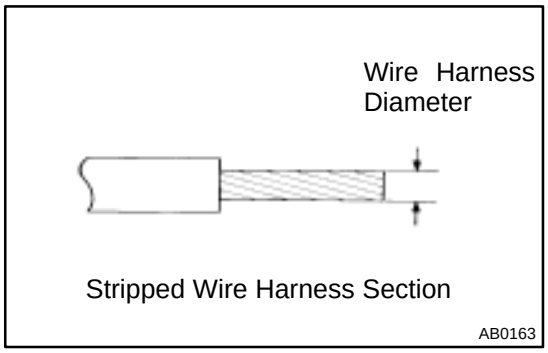

(c) Using a service–purpose wire harness, tie down the steering wheel pad to the disc wheel.
Wire harness: Stripped wire harness section 1.25 mm^2 or more (0.0019 in^2. or more).

CAUTION:

If a wire harness which is too thin or some other thing is used to tie down the steering wheel pad, it may be snapped by the shock when the airbag is deployed. This is highly dangerous. Always use a wire harness for vehicle use which is at least 1.25 mm^2 (0.0019 in^2).

HINT:

To calculate the square of the stripped wire harness section:
Square = 3.14 x (Diameter)^2 divided by 4

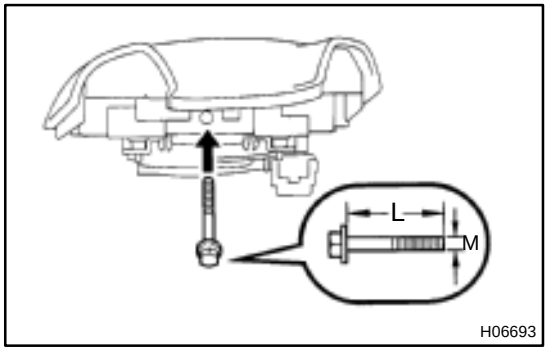

(1) Install the 2 bolts with washers in the 2 bolt holes in the steering wheel pad.
Bolt:
L: 35.0 mm (1.387 in.)
M: 6.0 mm (0.236 in.)
Pitch: 1.0 mm (0.039 in.)

NOTICE:

- **Tighten the bolts by hand until the bolts become difficult to turn.**
- **Do not tighten the bolts too much.**

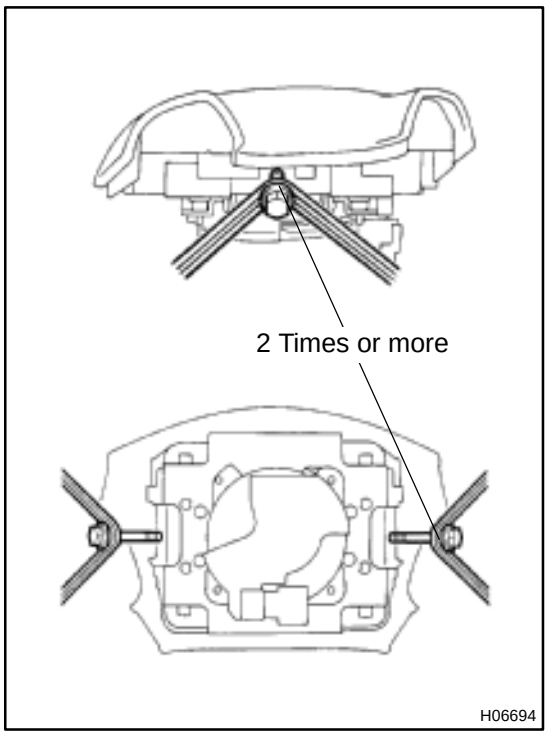

(2) Using 3 wire harnesses, wind the wire harness at least 2 times each around the bolts installed on the left and right sides of the steering wheel pad.

CAUTION:

- **Tightly wind the wire harness around the bolts so that there is no slack.**
- **If there is slack in the wire harness, the steering wheel pad may come loose due to the shock when the airbag is deployed. This is highly dangerous.**

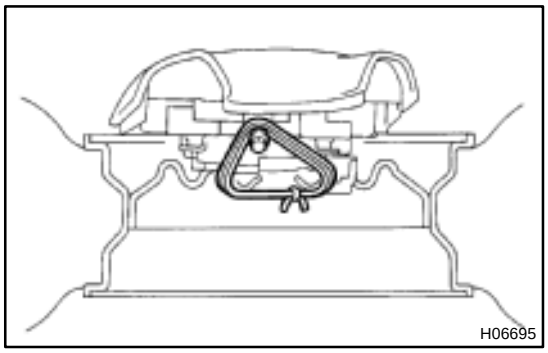

(3) Face the upper surface of the steering wheel pad upward. Separately tie the left and right sides of the steering wheel pad to the disc wheel through the hub nut holes. Position the steering wheel pad connector so that it hangs downward through a hub hole in the disc wheel.

CAUTION:

- **Make sure that the wire harness is tight. It is very dangerous when looseness in the wire harness results in the steering wheel pad coming free through the shock from the airbag deploying.**
- **Always tie down the steering wheel pad with the pad side facing upward. It is very dangerous if the steering wheel pad is tied down with the metal surface facing upward as the wire harness will be cut by the shock from the airbag deploying and the steering wheel pad will be thrown into the air.**

NOTICE:

The disc wheel will be marked by airbag deployment, so when disposing of the airbag use a redundant disc wheel.

(d) Check functioning of the SST. (See step 1–(a))
SST 09082–00700

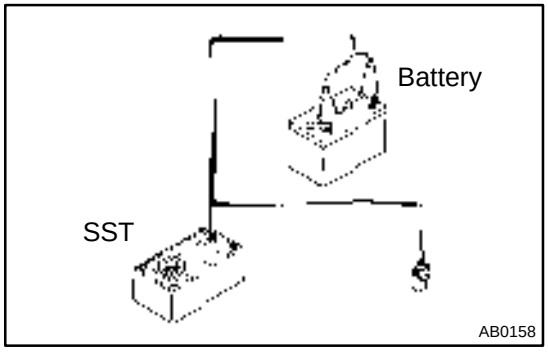

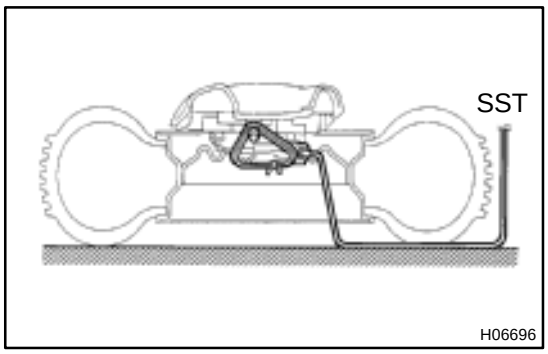

(e) Install the SST.

CAUTION:

Place the disc wheel on the level ground.

(1) Connect the connector of SST to the steering wheel pad connector.

SST 09082–00700

NOTICE:

To avoid damaging the SST connector and wire harness, do not lock the secondary lock of the twin lock. Also, secure some slack for the SST wire harness inside the disc wheel.

(2) Move the SST to at least 10 m (33 ft) away from the steering wheel pad tied down on the disc wheel.

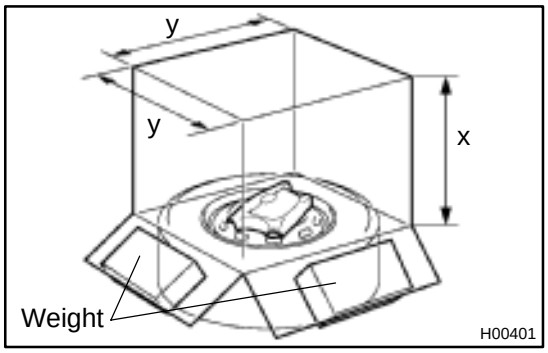

(f) Cover the steering wheel pad with a cardboard box or tires.

- Covering method using a cardboard box:
  Cover the steering wheel pad with the cardboard box and weight the cardboard box down in 4 places with at least 190 N (20 kg, 44 lb).

Size of cardboard box:

Must exceed the following dimensions:

x= 460 mm (18.11 in.)

When dimension of the cardboard box exceeds the diameter of the disc wheel with tire to which the steering wheel pad is tied

x= 460 mm (18.11 in.) + width of tire

y= 650 mm (25.59 in.)

NOTICE:

If a cardboard box smaller than the specified size is used, the cardboard box will be broken by the shock from the airbag deployment.

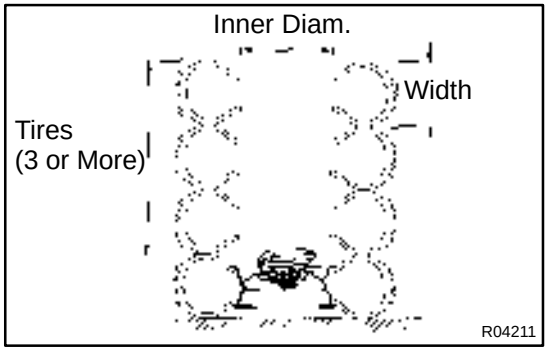

- Covering method using tires:
  Place at least 3 tires without disc wheel on top of the disc wheel with tire to which the steering wheel pad is tied.

Tire size: Must exceed the following dimensions–

Width: 185 mm (7.87 in.)

Inner diameter: 360 mm (14.17 in.)

CAUTION:
Do not use tires with disc wheels.
NOTICE:
The tires may be marked by the airbag deployment, so use the redundant tires.

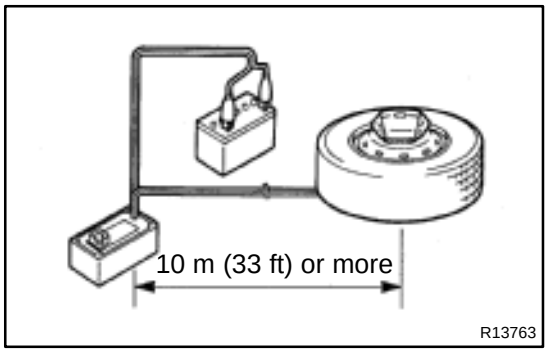

(g) Deploy the airbag.
(1) Connect the SST red clip to the battery positive (+) terminal and the black clip to the battery negative (–) terminal.
(2) Check that no one is within 10 m (33 ft) area around the disc wheel which the steering wheel pad is tied to.
(3) Press the SST activation switch and deploy the airbag.

HINT:
The airbag deploys simultaneously as the LED of the SST activation switch lights up.



(h) Dispose of the steering wheel pad (with airbag).

CAUTION:
- **The steering wheel pad is very hot when the airbag is deployed, so leave it alone for at least 30 minutes after deployment.**
- **Use gloves and safety glasses when handling a steering wheel pad with deployed airbag.**
- **Always wash your hands with water after completing the operation.**
- **Do not apply water, etc. to a steering wheel pad with deployed airbag.**

(1) Remove the steering wheel pad from the disc wheel.
(2) Place the steering wheel pad in a vinyl bag, tie the end tightly and dispose of it in the same way as other general parts disposal.

RS012–19

REPLACEMENT

REPLACEMENT REQUIREMENTS

In the following cases, replace the steering wheel pad, steering wheel or spiral cable.

Case	Replacing part
If the airbag has been deployed.	Steering wheel pad
If the steering wheel pad has been found to be faulty in troubleshooting.	Steering wheel pad
If the spiral cable has been found to be faulty in troubleshooting.	Spiral cable
If the steering wheel pad has been found to be faulty during checking items. (See page RS–16)	Steering wheel pad
If the steering wheel has been found to be faulty during checking items. (See page RS–16)	Steering wheel
If the spiral cable has been found to be faulty during checking items. (See page RS–16)	Spiral cable
If the steering wheel pad has been dropped.	Steering wheel pad

CAUTION:

For removal and installation of the steering wheel pad, see page SR–11 and SR–16. Be sure to follow the correct procedure.

RS013–15

INSTALLATION

HINT:

For step 1 to 4, refer to page SR–16.

1. **INSTALL SPIRAL CABLE**
2. **INSTALL UPPER AND LOWER COLUMN COVERS**
3. **INSTALL STEERING WHEEL**
4. **INSTALL STEERING WHEEL PAD**

FRONT PASSENGER AIRBAG ASSEMBLY

RS014–21

COMPONENTS

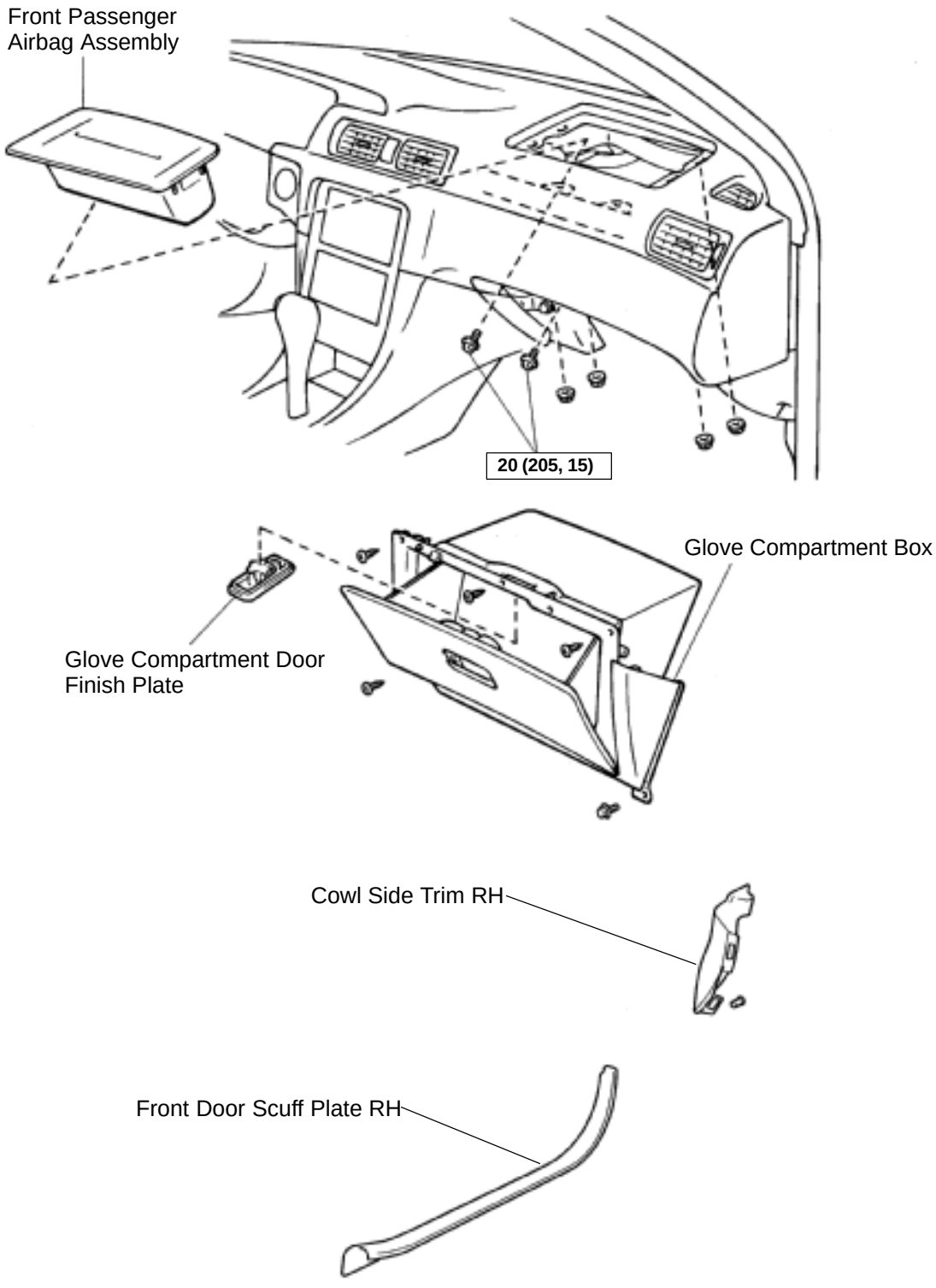

N·m (kgf·cm, ft·lbf) : Specified torque

H08321

RS02P–03

REMOVAL

NOTICE:

- **If the wiring connector of the SRS is disconnected and the ignition switch is in ON or ACC position, DTCs will be recorded.**
- **Never use the airbag parts from another vehicle. When replacing parts, replace them with new parts.**

HINT:

For step 2 to 4, refer to page BO–75.

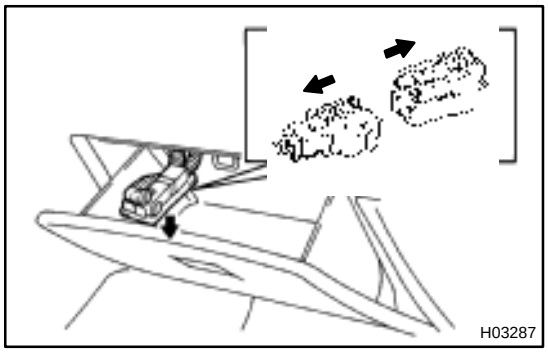

1. DISCONNECT AIRBAG CONNECTOR

(a) Remove the glove compartment door finish plate inside the glove compartment box.

NOTICE:

When handling the airbag connector, take care not to damage the airbag wire harness.

(b) Pull up the connector.

(c) Disconnect the front passenger airbag connector.

2. REMOVE FRONT DOOR SCUFF PLATE

3. REMOVE COWL SIDE TRIM

4. REMOVE GLOVE COMPARTMENT BOX

5. REMOVE FRONT PASSENGER AIRBAG ASSEMBLY

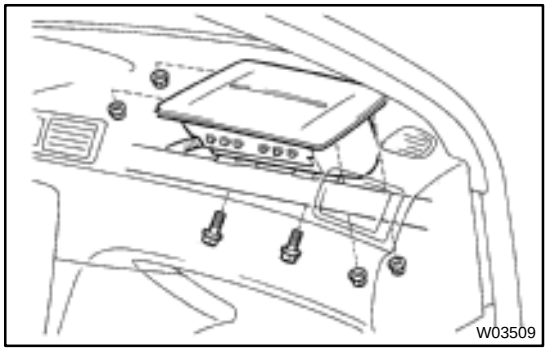

Remove the 2 bolts, 4 nuts and front passenger airbag assembly.

CAUTION:

- **Do not store the front passenger airbag assembly with the airbag deployment side facing downward.**
- **Never disassemble the front passenger airbag assembly.**

RS02Q–03

INSPECTION

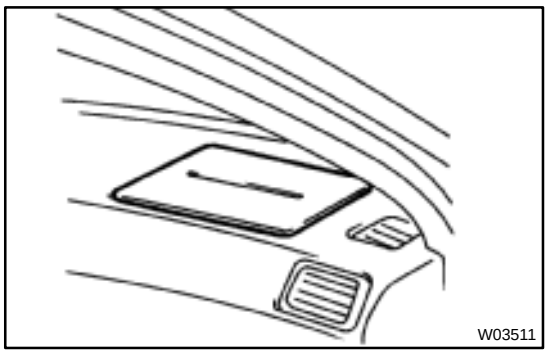

1. VEHICLE NOT INVOLVED IN COLLISION

(a) Do a diagnostic system check.
(See page DI–626)

(b) Do a visual check which includes the following items with the front passenger airbag assembly installed in the vehicle.
Check cuts, minute cracks or marked discoloration on the front passenger airbag assembly and instrument panel.

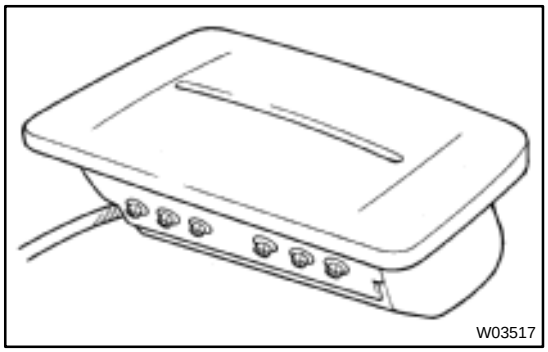

2. VEHICLE INVOLVED IN COLLISION AND AIRBAG IS NOT DEPLOYED

(a) Do a diagnostic system check.
(See page DI–626)

(b) Do a visual check which includes the following items with the front passenger airbag assembly removed from the vehicle.

- Check cuts, minute cracks or marked discoloration on the front passenger airbag assembly.
- Check cuts and cracks in wire harnesses, and for chipping in connectors.
- Check the deformation or cracks on the instrument panel and instrument panel reinforcement.

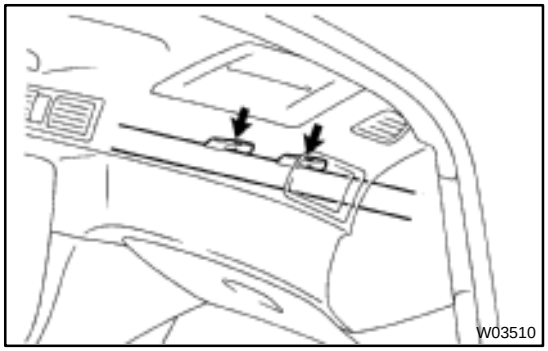

HINT:

- If the instrument panel or instrument panel reinforcement is deformed or cracked, never repair it. Always replace it with a new one.

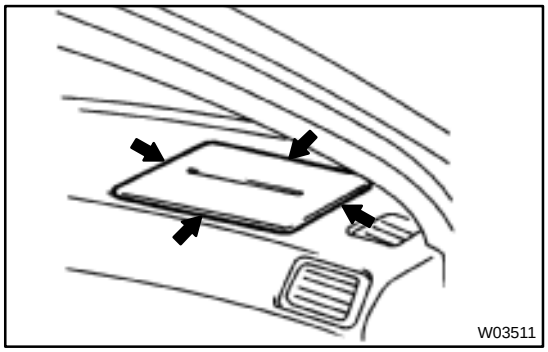

- There should be no interference between the instrument panel and the front passenger airbag assembly.

CAUTION:
For removal and installation of the front passenger airbag assembly, see page RS–28 and RS–38, and be sure to follow the correct procedure.

3. VEHICLE INVOLVED IN COLLISION AND AIRBAG IS DEPLOYED

(a) Do a diagnostic system check.
(See page DI–626)

(b) Do a visual check which includes the following items with the front passenger airbag assembly removed from the vehicle.

- Check the deformation or cracks on the instrument panel and instrument panel reinforcement.
- Check the damage on the connector and wire harness.

HINT:
If the instrument panel or instrument panel reinforcement is deformed or cracked, never repair it. Always replace it with a new one.

RS05F–02

DISPOSAL

HINT:

When scrapping vehicle equipped with an SRS or disposing of a front passenger airbag assembly, always first deploy the airbag in accordance with the procedure described below. If any abnormality occurs with the airbag deployment, contact the SERVICE DEPT. of TOYOTA MOTOR SALES, U.S.A., INC.

When disposing of a front passenger airbag assembly with an airbag deployed in a collision, follow the same procedure given in step 1–(e) in ”DISPOSAL”.

CAUTION:

- **Never dispose of a front passenger airbag assembly which has an undeployed airbag.**
- **The airbag produces a sizeable exploding sound when it deploys, so perform the operation out–of–doors and where it will not create a nuisance to nearby residents.**



- **When deploying the airbag, always use the specified SST (SRS Airbag Deployment Tool). Perform the operation in a place away from electrical noise.**
  SST 09082–00700
- **When deploying an airbag, perform the operation at least 10 m (33 ft) away from the front passenger airbag assembly.**
- **The front passenger airbag assembly is very hot when the airbag is deployed, so leave it alone for at least 30 minutes after deployment.**
- **Use gloves and safety glasses when handling a front passenger airbag assembly with deployed airbag.**
- **Always wash your hands with water after completing the operation.**
- **Do not apply water, etc. to a front passenger airbag assembly with deployed airbag.**

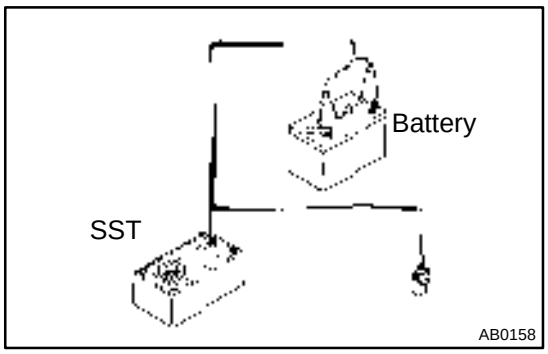

1. AIRBAG DEPLOYMENT WHEN SCRAPPING VEHICLE

HINT:

Have a battery ready as the power source to deploy the airbag.

(a) Check functioning of the SST. (See page RS–18)

SST 09082–00700

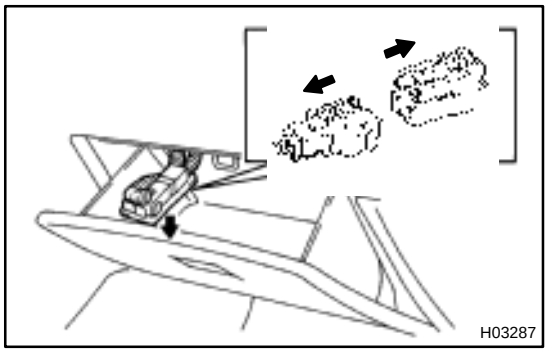

(b) Disconnect the airbag connector.

(1) Remove the lower instrument cover inside the No.2 under cover.

NOTICE:

When handling the airbag connector, take care not to damage the airbag wire harness.

(2) Pull up the connector.

(3) Disconnect the airbag connector.

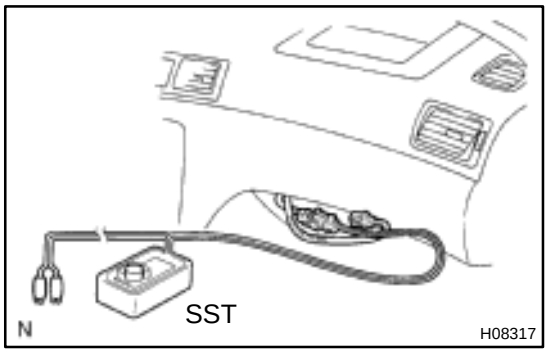

(c) Install the SST.

(1) Connect the connector of 2 SST to the front passenger airbag assembly connector.

SST 09082–00700, 09082–00760

NOTICE:

To avoid damaging the SST connector and wire harness, do not lock the secondary lock of the twin lock.

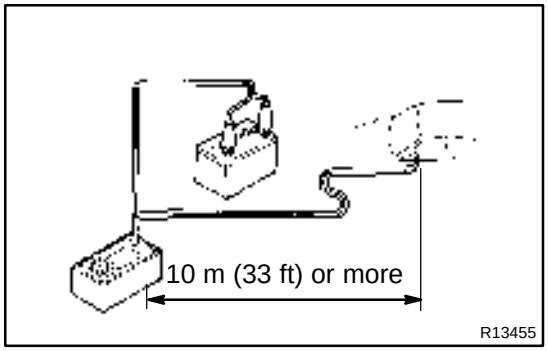

(2) Move the SST to at least 10 m (33 ft) away from the front of the vehicle.

(3) Close all the doors and windows of the vehicle.

NOTICE:

Take care not to damage the SST wire harness.

(4) Connect the SST red clip to the battery positive (+) terminal and the black clip to the negative (–) terminal.

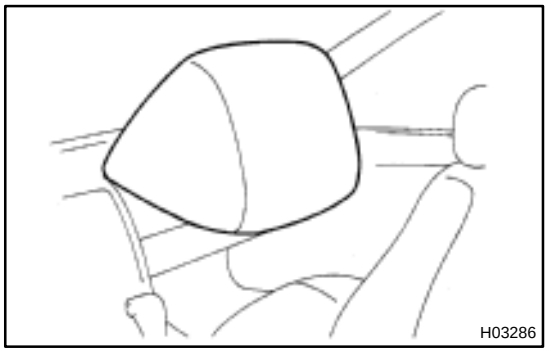

(d) Deploy the airbag.

(1) Check that no one is inside the vehicle or within 10 m (33 ft) area around the vehicle.

(2) Press the SST activation switch and deploy the airbag.

HINT:

The airbag deploys simultaneously as the LED of the SST activation switch lights up.

(e) Dispose of the front passenger airbag assembly.

CAUTION:

- **The front passenger airbag assembly is very hot when the airbag is deployed, so leave it alone for at least 30 minutes after deployment.**
- **Use gloves and safety glasses when handling a front passenger airbag assembly with deployed airbag.**
- **Always wash your hands with water after completing the operation.**
- **Do not apply water, etc. to a front passenger airbag assembly with deployed airbag.**
  (1) When scrapping a vehicle, deploy the airbag and scrap the vehicle with the front passenger airbag assembly still installed.
  (2) When moving a vehicle for scrapping which has a front passenger airbag assembly with deployed airbag, use gloves and safety glasses.

2. DEPLOYMENT WHEN DISPOSING OF FRONT PASSENGER AIRBAG ASSEMBLY ONLY

NOTICE:

- **When disposing of the front passenger airbag assembly only, never use the customer's vehicle to deploy the airbag.**
- **Be sure to follow the procedure given below when deploying the airbag.**

HINT:

Have a battery ready as the power source to deploy the airbag.

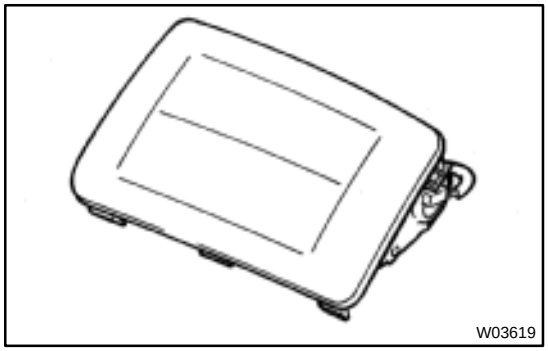

(a) Remove the front passenger airbag assembly.
(See page RS–28)

CAUTION:

- **When removing the front passenger airbag assembly, work must be started 90 seconds after the ignition switch is turned to the "LOCK" position and the negative (–) terminal cable is disconnected from the battery.**
- **Store the front passenger airbag assembly with the airbag deployment side facing upward.**

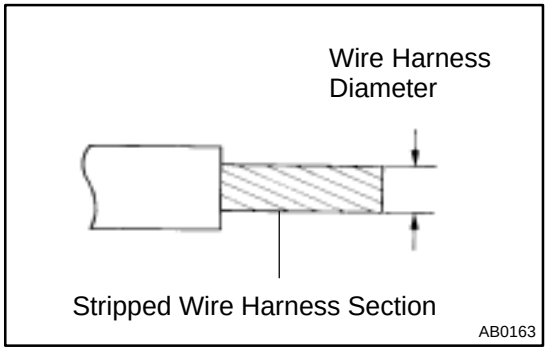

(b) Using a service–purpose wire harness for the vehicle, tie down the front passenger airbag assembly to the tire.
Wire harness: Stripped wire harness section 1.25 mm^2 or more (0.0019 $in.^2$ or more)

CAUTION:
If the front passenger airbag assembly is tied down with too thin wire harness, it may snap. This is highly dangerous. Always use a wire harness which is at least 1.25 mm^2 (0.0019 in.^{2}).
HINT:
To calculate the square of the stripped wire harness section:
Square = 3.14 X (Diameter)^2 divided by 4

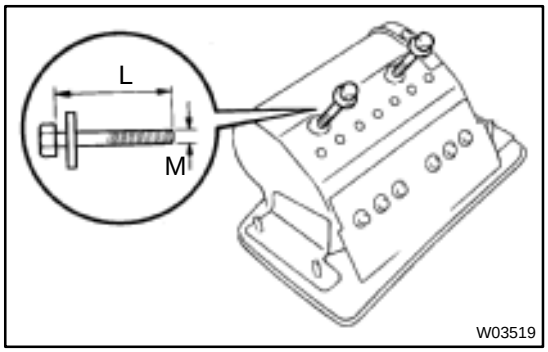

(1) Install the 2 bolts with washers in the 2 bolt holes in the front passenger airbag assembly,
Bolt:
L: 35.0 mm (1.387 in.)
M: 6.0 mm (0.236 in.)
Pitch: 1.0 mm (0.039 in.)

NOTICE:
- **Tighten the bolts by hand until the bolts become difficult to turn.**
- **Do not tighten the bolts too much.**

(2) Using 3 wire harness, wind the wire harness at least 2 times each around the bolts installed on the front passenger airbag assembly.

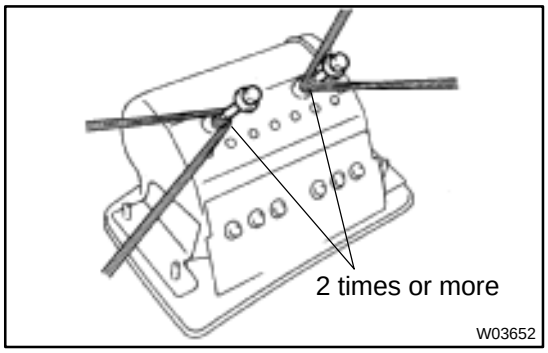

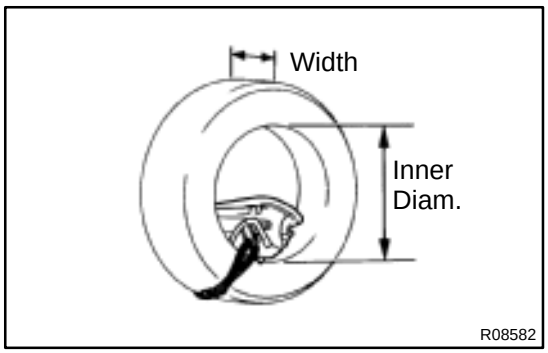

(3) Position the front passenger airbag assembly inside the tire with the airbag deployment side facing inside.
Tire size: Must exceed the following dimensions–
Width: 185 mm (7.28 in.)
Inner diameter: 360 mm (14.17 in.)

CAUTION:
- **Make sure that the wire harness is tight. It is very dangerous if looseness in the wire harness results in the front passenger airbag assembly coming free due to the shock from the airbag deploying.**
- **Always tie down the front passenger airbag assembly with the airbag deployment side facing inside.**

NOTICE:
The tire will be marked by the airbag deployment, so use a redundant tire.

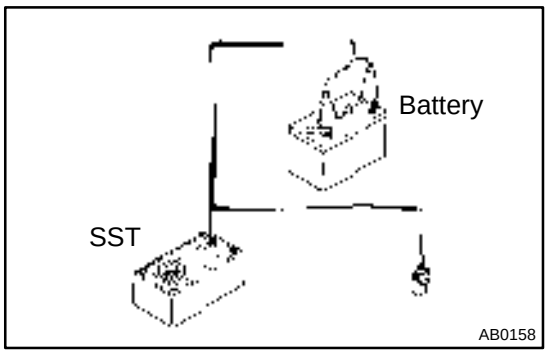

(c) Check functioning of the SST.
SST 09082–00700

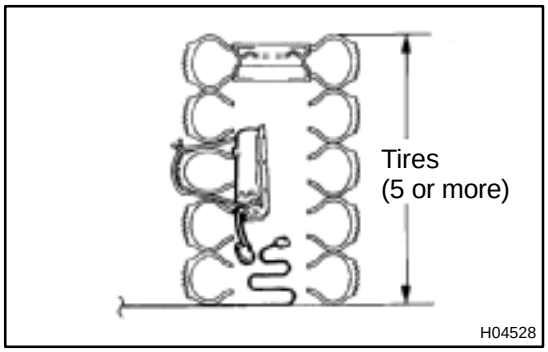

(d) Place tires.
(1) Place at least 2 tires under the tire to which the front passenger airbag assembly is tied.
(2) Place at least 2 tires over the tire to which the front passenger airbag assembly is tied. The top tire should have the wheel installed.

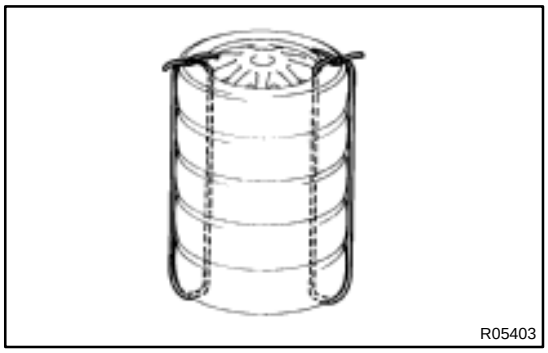

(3) Tie the tires together with 2 wire harness.

CAUTION:
Make sure that the wire harness is tight. It is very dangerous if loose wire harness result in the tires coming free due to the shock from the airbag deploying.

HINT:
Place the SST connector and wire harness inside tires. Provide at least 1 m (3 ft) of slack for the wire harness.

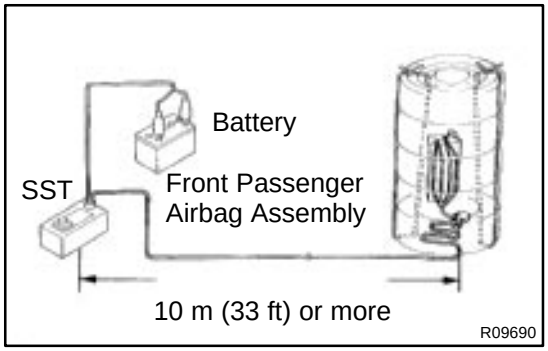

(e) Install the SST.
Connect the connector of 2 SST to the front passenger airbag assembly connector.
SST 09082–00700, 09082–00760

NOTICE:
To avoid damaging the SST connector and wire harness, do not lock the secondary lock of the twin lock.

(f) Deploy the airbag.
(1) Connect the SST red clip to the battery positive (+) terminal and the black clip to the battery negative (–) terminal.
(2) Check that no one is within 10 m (33 ft) area around the tire which the front passenger airbag assembly is tied to.
(3) Press the SST activation switch and deploy the airbag.

HINT:
The airbag deploys simultaneously as the LED of the SST activation switch lights up.



(g) Dispose of the front passenger airbag assembly.

CAUTION:

- **The front passenger airbag assembly is very hot when the airbag is deployed, so leave it alone for at least 30 minutes after deployment.**
- **Use gloves and safety glasses when handling a front passenger airbag assembly with deployed airbag.**
- **Always wash your hands with water after completing the operation.**
- **Do not apply water, etc. to a front passenger airbag assembly with deployed airbag.**

(1) Remove the front passenger airbag assembly from the tire.

(2) Place the front passenger airbag assembly in a vinyl bag, tie the end tightly and dispose of it in the same way as other general parts.

RS018–17

REPLACEMENT

REPLACEMENT REQUIREMENTS

In the following cases, replace the front passenger airbag assembly, instrument panel or instrument panel reinforcement.

Case	Replacing part
If the airbag has been deployed.	Front passenger airbag assembly
If the front passenger airbag assembly has been found to be faulty in trouble-shooting.	Front passenger airbag assembly
If the front passenger airbag assembly has been found to be faulty during checking items. (See page RS–29)	Front passenger airbag assembly
If the instrument panel has been found to be faulty during checking items. (See page RS–29)	Instrument panel
If the instrument panel reinforcement has been found to be faulty during checking items. (See page RS–29)	Instrument panel reinforcement
If the front passenger airbag assembly has been dropped.	Front passenger airbag assembly

CAUTION:

For replacement of the front passenger airbag assembly, see page RS–28 and RS–38. Be sure to follow the correct procedure.

RS019–05

INSTALLATION

NOTICE:

Never use airbag parts from another vehicle. When replacing parts, replace them with new parts.

HINT:

For step 2 to 4, refer to page BO–81.

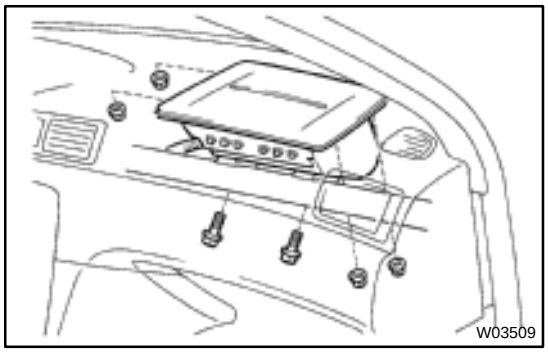

1. INSTALL FRONT PASSENGER AIRBAG ASSEMBLY

(a) Install the front passenger airbag assembly with the 2 bolts.

Torque: 20 N·m (205 kgf·cm, 15 ft·lbf)

(b) Install the 4 nuts.

CAUTION:

- **Make sure that no foreign objects are trapped between the airbag bag and the module.**
- **Do not damage the strap when installing the module.**

NOTICE:

If the front passenger airbag assembly has been dropped, or there are cracks, dents or other defects in the case or connector, replace the front passenger airbag assembly with a new one.

2. INSTALL GLOVE COMPARTMENT BOX

3. INSTALL COWL SIDE TRIM

4. INSTALL FRONT DOOR SCUFF PLATE

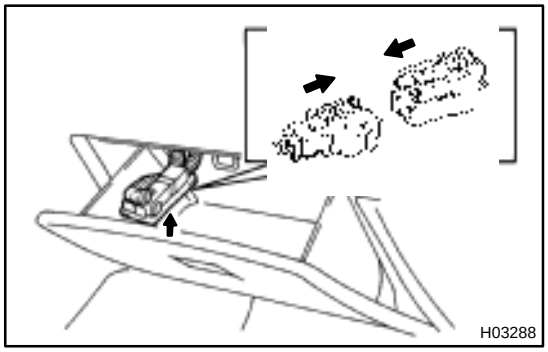

5. CONNECT AIRBAG CONNECTOR

(a) Connect the airbag connector.

(b) Put the connector on the glove compartment door finish plate.

(c) Install the glove compartment door finish plate to the glove compartment box.

SIDE AIRBAG ASSEMBLY (TMC Made)

RS05G–02

COMPONENTS

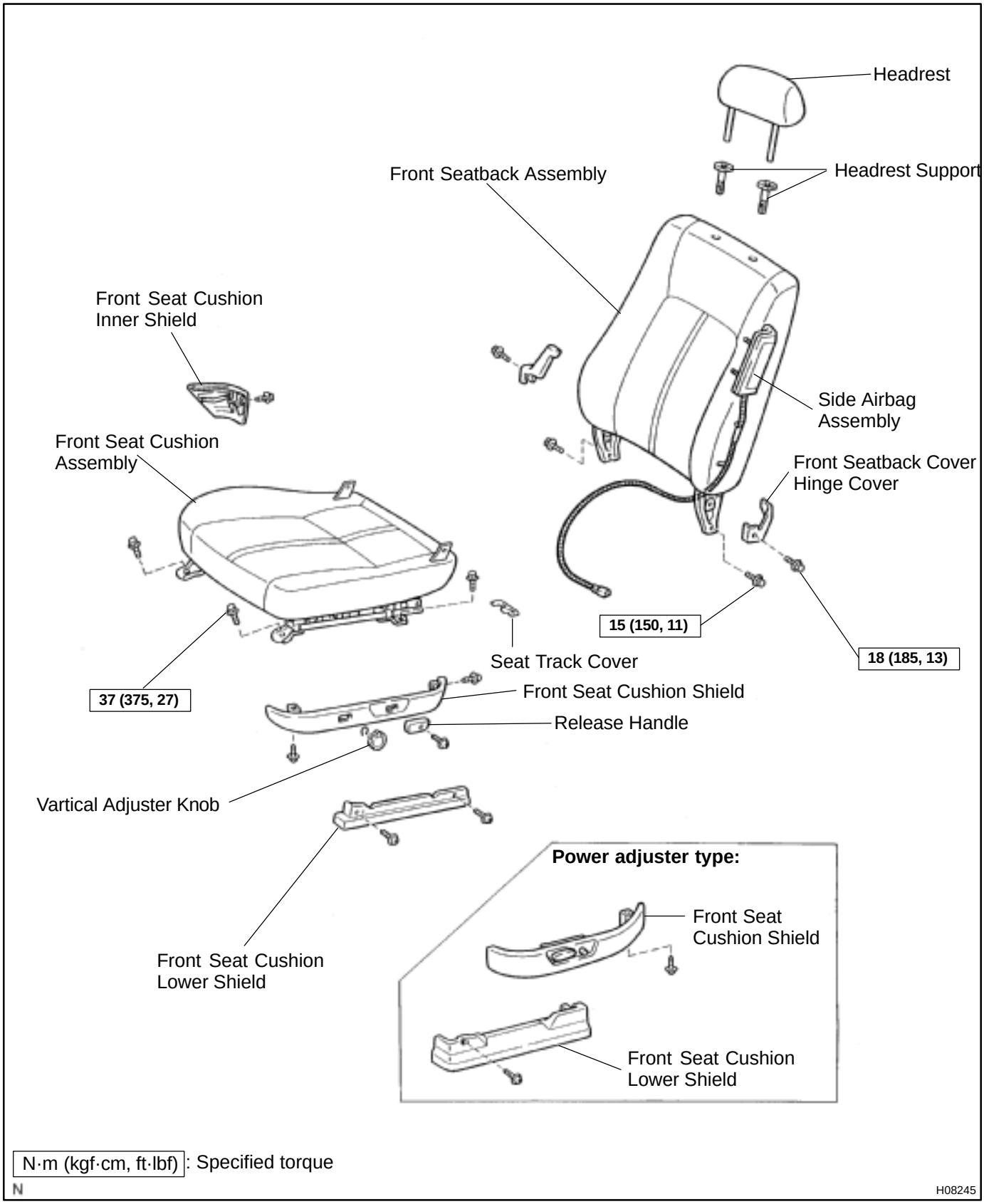

N·m (kgf·cm, ft·lbf): Specified torque

N

H08245

RS0EU–01

REMOVAL

NOTICE:

- **If the wiring connector of the SRS is disconnected and the ignition switch is in ON or ACC position, DTCs will be recorded.**
- **Never use the airbag parts from another vehicle. When replacing parts, replace them with new parts.**


H02270

1. REMOVE FRONT SEAT

(a) Remove the 2 seat track covers and 4 bolts.

(b) Power adjuster type:
Disconnect the power seat and side airbag connectors.

(c) Manual adjuster type:
Disconnect the side airbag connector.

NOTICE:

When handling the airbag connector, take care not to damage the airbag wire harness.

(d) Remove the front seat.

NOTICE:

Be careful not to damage the body.

2. REMOVE FRONT SEAT CUSHION LOWER SHIELD

3. Manual adjuster type:
REMOVE RELEASE HANDLE

4. Manual adjuster type:
REMOVE VERTICAL ADJUSTER KNOB

5. Power adjuster type:
DISCONNECT CONNECTOR

Disconnect the connector from the power seat switch.

6. REMOVE FRONT SEAT CUSHION SHIELD

7. REMOVE FRONT SEAT CUSHION INNER SHIELD

8. REMOVE HEADREST

9. REMOVE HEADREST SUPPORT

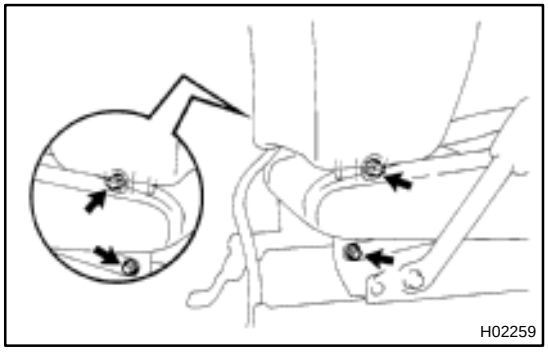
H02259

10. REMOVE SEATBACK ASSEMBLY

(a) Remove the 4 bolts.

(b) Remove the hog rings.

(c) Remove the seatback assembly.

RS05I–02

INSPECTION

1. VEHICLE NOT INVOLVED IN COLLISION

(a) Do a diagnostic system check. (See page DI–626)

(b) Do a visual check which includes the following items with the seatback assembly installed in the vehicle.

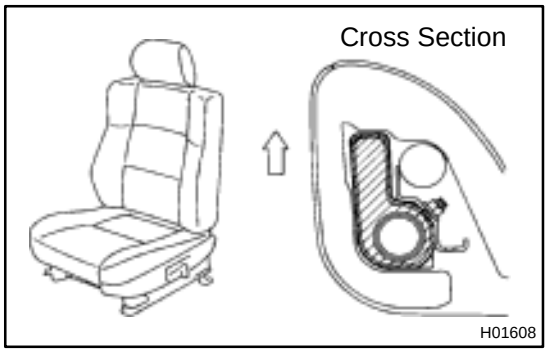

Check that there are no cuts or frayed seams and outside of seatback cover.

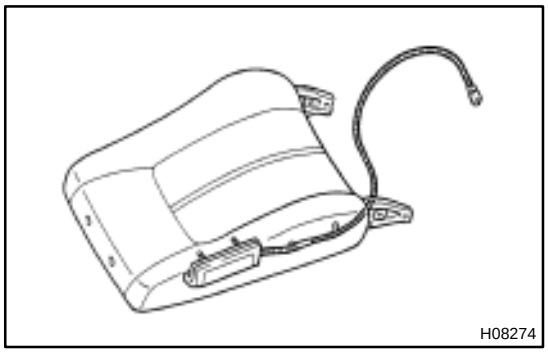

2. VEHICLE INVOLVED IN COLLISION AND AIRBAG IS NOT DEPLOYED

(a) Do a diagnostic system check. (See page DI–626)

(b) Do a visual check which includes the following items with the seatback assembly removed from the vehicle.

- Check cuts and cracks of the side airbag assembly.
- Check cuts and cracks in wire harnesses, and chipping in connectors.

CAUTION:

For removal and installation of the seatback assembly, see page RS–40 and RS–49. Be sure to follow the correct procedure.

3. VEHICLE INVOLVED IN COLLISION AND AIRBAG IS DEPLOYED

(a) Do a diagnostic system check.
(See page DI–626)

(b) Do a visual check which includes the following items with the seatback assembly removed from the vehicle.

- Check the seatback installation part of the seat adjuster.
- Check the damage to the connector and wire harness.

HINT:

If the seat adjuster is deformed, never repair it. Always replace it with a new one.

RS05J–02

DISPOSAL

HINT:

When scrapping vehicles equipped with an SRS or disposing of the side airbag assembly always first deploy the airbag in accordance with the procedure described below. If any abnormality occurs with the airbag deployment, contact the SERVICE DEPT. of TOYOTA MOTOR SALES, U.S.A., INC.

When disposing of a side airbag assembly with an airbag deployed in a collision, follow the same procedure given in step 1–(e) in ”DISPOSAL”.

CAUTION:

- **Never dispose of a side airbag assembly which has an undeployed airbag.**
- **The airbag produces a sizeable exploding sound when it deploys, so perform the operation out of doors and where it will not create a nuisance to nearby residents.**



- **When deploying the airbag, always use the specified SST (SRS Airbag Deployment Tool), perform the operation in a place away from electrical noise.**
  SST 09082–00700
- **When deploying an airbag, perform the operation at least 10 m (33 ft) away from the airbag assembly.**
- **The side airbag assembly is very hot when the airbag is deployed, so leave it alone for at least 30 minutes after deployment.**
- **Use gloves and safety glasses when handling side airbag assembly with the deployed airbag.**
- **Always wash your hands with water after completing the operation.**
- **Do not apply water, etc. to a side airbag assembly with the deployed airbag.**

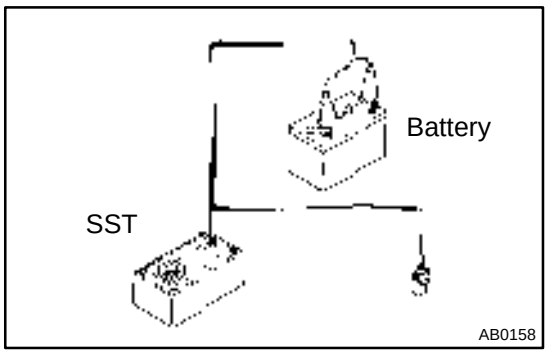

1. AIRBAG DEPLOYMENT WHEN SCRAPPING VEHICLE

HINT:

Have a battery ready as the power source to deploy the airbag.

(a) Check functioning of the SST. (See page RS–18)

SST 09082–00700



(b) Disconnect the side airbag connector.

NOTICE:

When handling the airbag connector, take care not to damage the airbag wire harness.

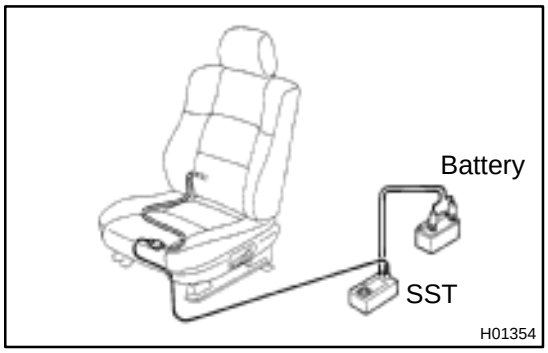

(c) Install the SST.

(1) Connect the connector of 2 SST to the airbag connector.

SST 09082–00700, 09082–00750

NOTICE:

To avoid damaging the SST connector and wire harness, do not lock the secondary lock of the twin lock.

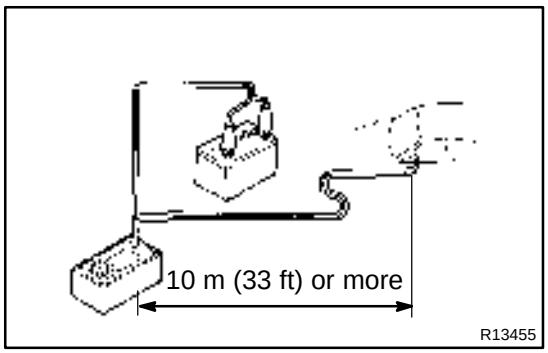

(2) Move the SST at least 10 m (33 ft) away from the front of the vehicle.

(3) Close all the doors and windows of the vehicle.

NOTICE:

Take care not to damage the SST wire harness.

(4) Connect the SST red clip to the battery positive (+) terminal and the black clip to the battery negative (–) terminal.



(d) Deploy the airbag.

(1) Check that no one is inside the vehicle or within 10 m (33 ft) area around the vehicle.

(2) Press the SST activation switch and deploy the airbag.

HINT:

The airbag deploys simultaneously as the LED of SST activation switch lights up.

(e) Dispose of side airbag assembly.

CAUTION:

- **The side airbag assembly is very hot when the airbag is deployed, so leave it alone for at least 30 minutes after deployment.**
- **Use gloves and safety glasses when handling a side airbag assembly with the deployed airbag.**
- **Do not apply water, etc. to a side airbag assembly with the deployed airbag.**
- **Always wash your hands with water after completing the operation.**

When scrapping a vehicle, deploy the airbag and scrap the vehicle with the side airbag assembly still installed.

2. DEPLOYMENT WHEN DISPOSING OF SIDE AIRBAG ASSEMBLY

NOTICE:

- **When disposing of the side airbag assembly only, never use the customer's vehicle to deploy the airbag.**
- **Be sure to follow the procedure given below when deploying the airbag.**

HINT:

Have a battery ready as the power source to deploy the airbag.

(a) Remove the seatback assembly.

(b) Remove the side airbag assembly from the seatback assembly.

CAUTION:

Store the side airbag assembly with the airbag deployment side facing upward.

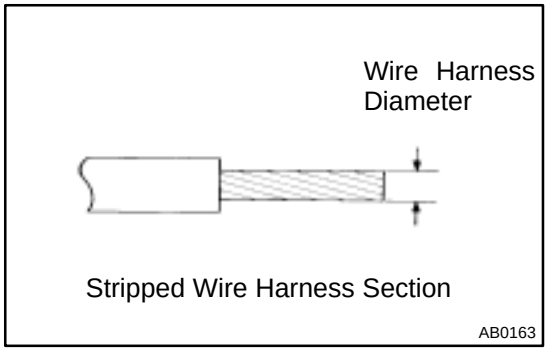

(c) Using a service–purpose wire harness tie down the side airbag assembly.

Wire harness: Stripped wire harness section 1.25 mm^2 or more (0.0019 in^2 or more)

CAUTION:

If a wire harness which is too thin or some other thing is used to tie down the side airbag assembly, it may be snapped by the shock when the airbag is deployed. This is highly dangerous. Always use a wire harness for vehicle use which is at least 1.25 mm^2 (0.0019 in^2).

HINT:

To calculate the square of the stripped wire harness section:

Square = 3.14 x $(Diameter)^2$ divided by 4

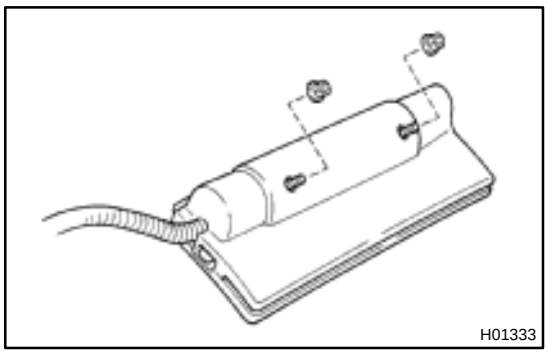

(1) Install the 2 nuts to the side airbag assembly.

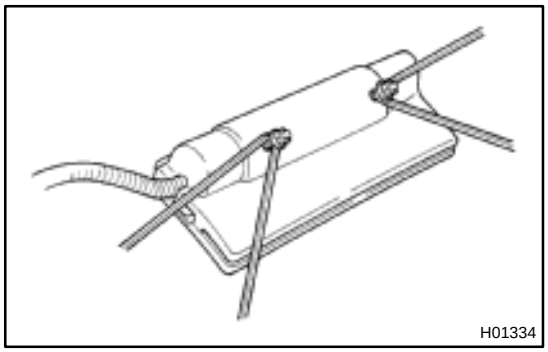

(2) Wind the wire harness around the stud bolts of the side airbag assembly as shown in the illustration.

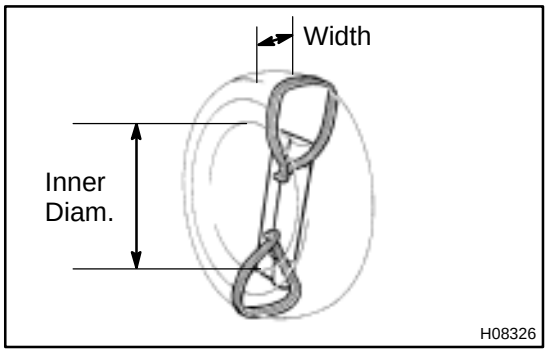

(3) Position the side airbag assembly inside the tire with the airbag deployment direction facing inside.

Tire size : Must exceed the following dimensions:–
Width 185 mm (7.28 in.)
Inner diameter 360 mm (14.17 in.)

CAUTION:

- **Make sure the wire harness is tight. It is very dangerous when a loose wire harness results in the side airbag assembly coming free due to the shock from the airbag deploying.**
- **Always tie down the side airbag assembly with the airbag door facing inside.**

NOTICE:

The tire will be marked by the airbag deployment, so when disposing of the airbag use a redundant tire.

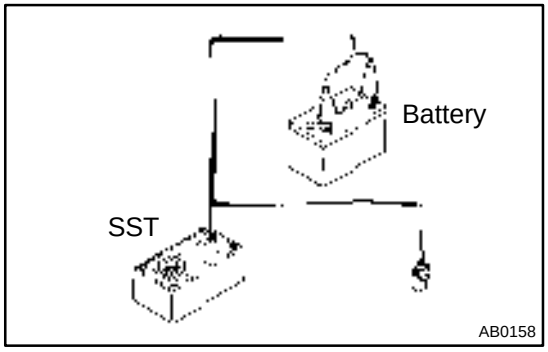

(d) Check functioning of the SST. (See page RS–18)
SST 09082–00700

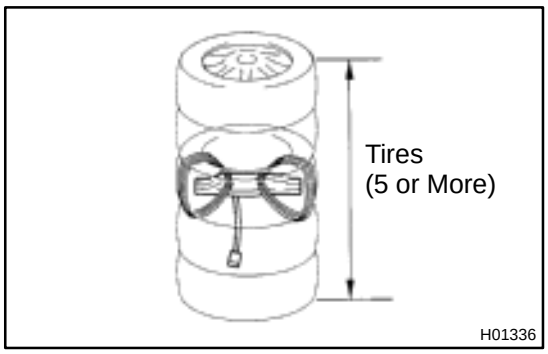

(e) Place the tires.
(1) Place at least 2 tires under the tire to which the side airbag assembly is tied.
(2) Place at least 2 tires over the tire to which the side airbag assembly is tied. The top tire should have the wheel installed.

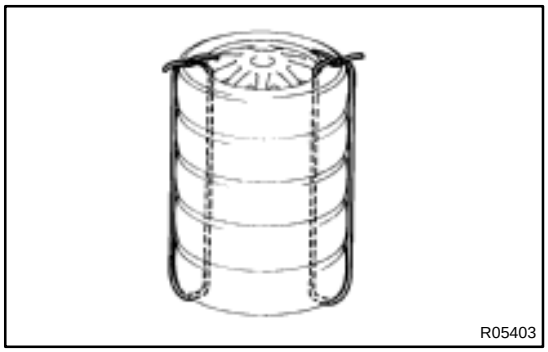

(3) Tie the tires together with the 2 wire harnesses.

CAUTION:
Make sure that the wire harnesses are tight. It is very dangerous when loose wire harnesses result in the tires coming free due to the shock from the airbag deploying.

HINT:
Place the SST connector and wire harness inside tires. Secure at least 1 m (3 ft) of slack for the wire harness.

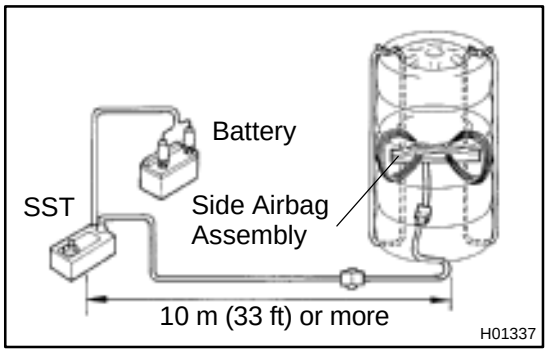

(f) Install the SST.
Connect the connector of 2 SST to the side airbag assembly connector.
SST 09082–00700, 09082–00750

(g) Deploy the airbag.
(1) Connect the SST red clip to the battery positive (+) terminal and the black clip to the battery negative (–) terminal.
(2) Check that no one is within 10 m (33 ft) area around the tire which the side airbag assembly is tied to.
(3) Press the SST activation switch and deploy the airbag.

HINT:
The airbag deploys simultaneously as the LED of the SST activation switch lights up.

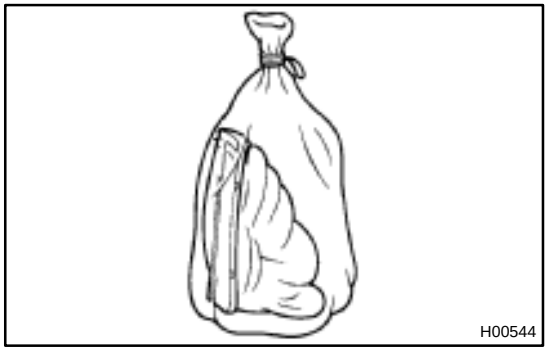

(h) Dispose of the side airbag assembly.

CAUTION:
- **The side airbag assembly is very hot when the airbag is deployed, so leave it alone for at least 30 minutes after deployment.**
- **Use gloves and safety glasses when handling a side airbag assembly with the deployed airbag.**
- **Do not apply water etc. to a side airbag assembly with the deployed airbag.**

- **Always wash your hands with water after completing the operation.**
  (1) Remove the side airbag assembly from the tire.
  (2) Place the side airbag assembly in a vinyl bag, tie the end tightly and dispose of it in the same way as other general parts disposal.

RS05K–02

REPLACEMENT

REPLACEMENT REQUIREMENTS

In the following cases, replace the seatback assembly or seatback cover.

Case	Replacing part
If the side airbag has been deployed.	Seatback assembly
If the side airbag assembly has been found to be faulty in troubleshooting.	Seatback assembly
If the side airbag assembly has cuts during checking items. (See page RS–41)	Seatback assembly
If the seatback cover has cuts and frayed seams during checking items. (See page RS–41)	Seatback cover
If the side airbag assembly has been found to be faulty during checking items. (See page RS–41)	Seatback assembly
If the seatback cover has been found to be faulty during checking items. (See page RS–41)	Seatback cover
If the seatback assembly has been dropped.	Seatback assembly

CAUTION:

For removal and installation of the seatback assembly, see page RS–40 and RS–49. Be sure to follow the correct procedure.

RS0EV–01

INSTALLATION

NOTICE:

Never use airbag parts from another vehicle. When replacing parts, replace them with new parts.

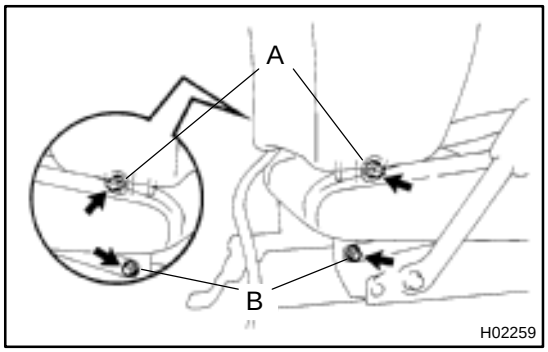

1. INSTALL SEATBACK ASSEMBLY

(a) Install the seatback assembly.

(b) Install new hog rings.

HINT:

Install the hog rings to prevent wrinkles as little as possible.

(c) Install the 4 bolts.

Torque:
Bolt A: 18 N·m (185 kgf·cm, 13 ft·lbf)
Bolt B: 15 N·m (150 kgf·cm, 11 ft·lbf)

2. INSTALL FRONT SEAT CUSHION INNER SHIELD

3. INSTALL FRONT SEAT CUSHION SHIELD

4. Manual adjuster type:
INSTALL VERTICAL ADJUSTER KNOB

5. Manual adjuster type:
INSTALL RELEASE HANDLE

6. Power adjuster type:
CONNECT CONNECTOR

Connect the connector to the power seat switch.

7. INSTALL FRONT SEAT CUSHION LOWER SHIELD

8. INSTALL HEADREST SUPPORT

9. INSTALL HEADREST

10. INSTALL FRONT SEAT

(a) Slide the front seat to the most front position.

NOTICE:

Make sure that seat adjuster locks.

(b) Without holding the seat track handle, mount the seat to the vehicle.

HINT:

If holding the seat track handle, the adjusted most front position will slip off.

(c) Power adjuster type:
Connect the side airbag connector and power seat connector.

(d) Manual adjuster type:
Connect the side airbag connector.

(e) Tighten the bolts on the rear side temporarily, starting from the bolt on the inner side tighten them completely.
Torque: 37 N·m (375 kgf·cm, 27 ft·lbf)

(f) Slide the seat to the rearmost position to install the bolts on the front side.
Torque: 37 N·m (375 kgf·cm, 27 ft·lbf)

SIDE AIRBAG ASSEMBLY (TMMK Made)

RS05M–03

COMPONENTS

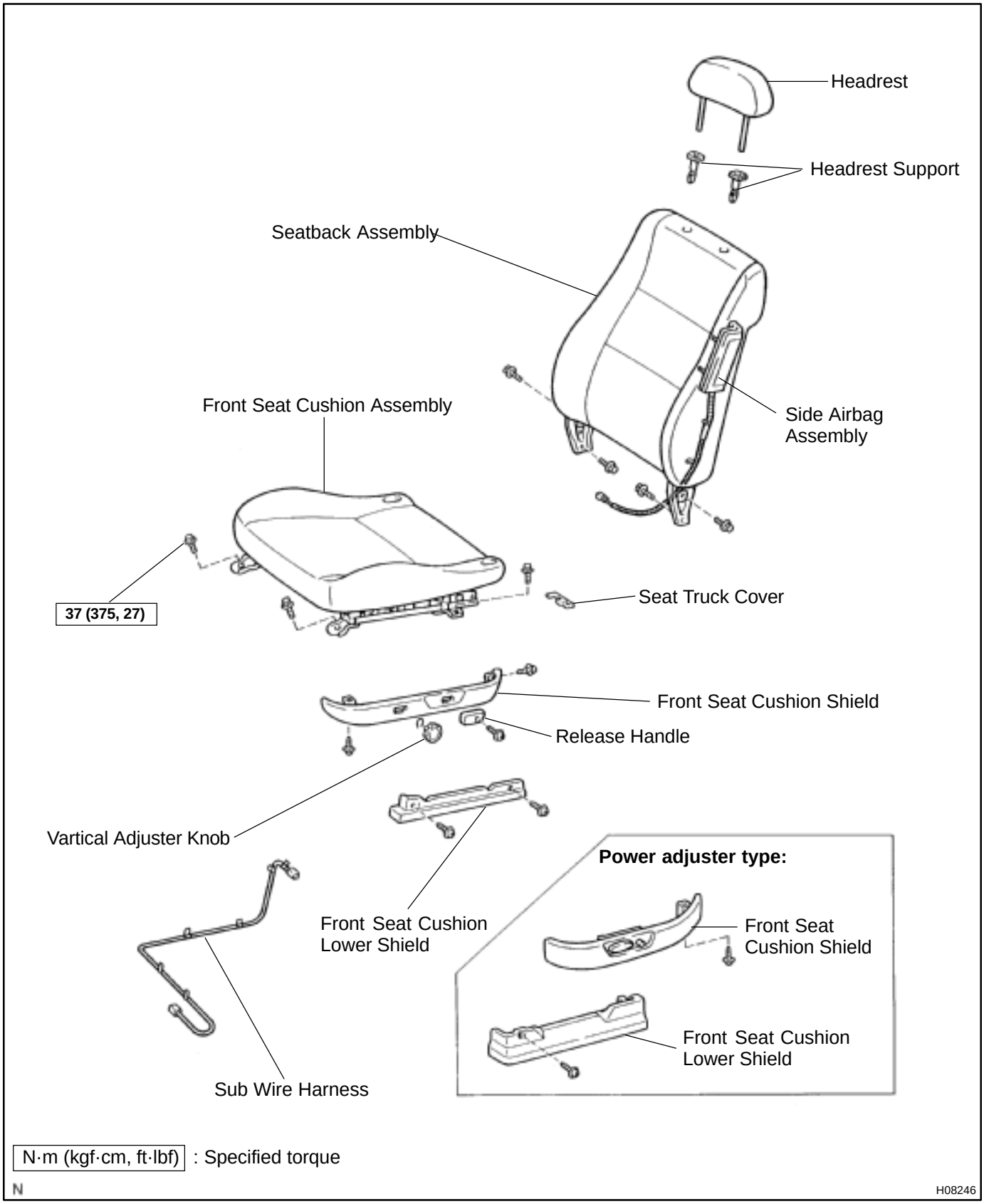

N·m (kgf·cm, ft·lbf) : Specified torque

N

H08246

RS0EW–01

REMOVAL

NOTICE:

- **If the wiring connector of the SRS is disconnected and the ignition switch is at ON or ACC position, DTCs will be recorded.**
- **Never use the airbag parts from another vehicle. When replacing parts, replace them with new parts.**



1. REMOVE FRONT SEAT

(a) Remove the 2 seat track covers and 4 bolts.

(b) Power adjuster type:
Disconnect the power seat and side airbag connectors.

(c) Manual adjuster type:
Disconnect the side airbag connector.

NOTICE:

When handling the airbag connector, take care not to damage the airbag wire harness.

(d) Remove the front seat.

NOTICE:

Be careful not to damage the body.

2. REMOVE FRONT SEAT CUSHION LOWER SHIELD

3. Manual adjuster type:
REMOVE RELEASE HANDLE

4. Manual adjuster type:
REMOVE VERTICAL ADJUSTER KNOB

5. Power adjuster type:
DISCONNECT CONNECTOR

Disconnect the connector from the power seat switch.

6. REMOVE FRONT SEAT CUSHION SHIELD

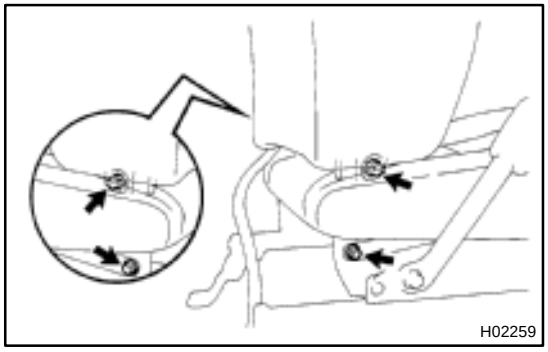

7. REMOVE SEATBACK ASSEMBLY

(a) Remove the 4 bolts.

(b) Remove the hog rings.

(c) Disconnect the side airbag connector of the side airbag assembly side.

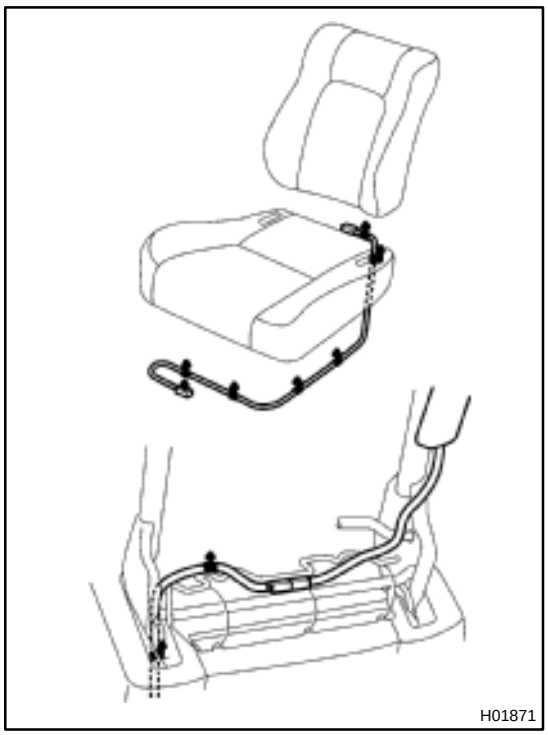

(d) Remove the side airbag sub wire harness after removing clips.

(e) Remove the seatback assembly.

RS05O–03

INSPECTION

1. VEHICLES NOT INVOLVED IN COLLISION

(a) Do a diagnostic system check. (See page DI–626)

(b) Do a visual check which includes the following items with the seatback assembly installed in the vehicle.

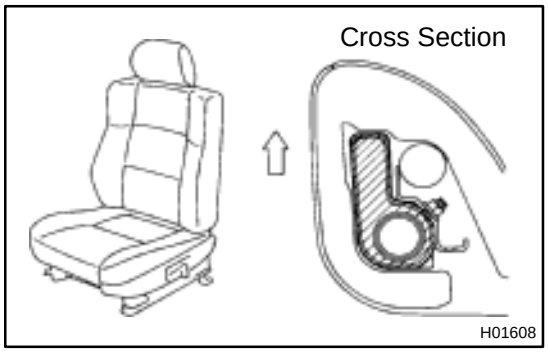

Check that there are no cuts or frayed in seams and outside of seatback cover.

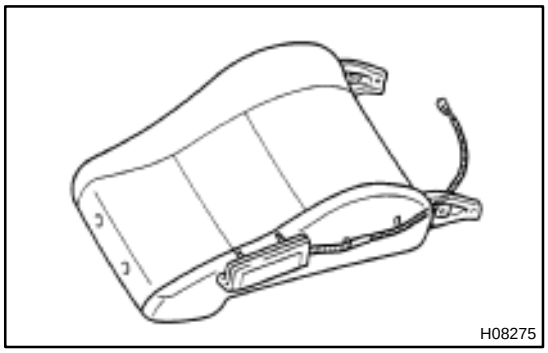

2. VEHICLE INVOLVED IN A COLLISION AND AIRBAG IS NOT DEPLOYED

(a) Do a diagnostic system check. (See page DI–626)

(b) Do a visual check which includes the following items with the seatback assembly removed from the vehicle.

- Check cuts and cracks of the side airbag assembly.
- Check cuts and cracks in wire harnesses, and chipping in connectors.

CAUTION:

For removal and installation of the seatback assembly, see page RS–52 and RS–57. Be sure to follow the correct procedure.

3. VEHICLE INVOLVED IN A COLLISION AND AIRBAG IS DEPLOYED

(a) Do a diagnostic system check.
(See page DI–626)

(b) Do a visual check which includes the following items with the seatback assembly removed from the vehicle.

- Check the seatback installation part of the seat adjuster.
- Check the damage to the connector and wire harness.

HINT:

If the seat adjuster is deformed, never repair it. Always replace it with a new one.

RS05P–02

DISPOSAL

(See page RS–42)

RS05Q–03

REPLACEMENT

REPLACEMENT REQUIREMENTS

In the following cases, replace the seatback assembly or seat cover.

Case	Replacing part
If the side airbag has been deployed.	Seatback assembly
If the side airbag assembly has been found to be faulty in troubleshooting.	Seatback assembly
If the side airbag assembly has cuts during checking items. (See page RS–54)	Seatback assembly
If the seatback cover has cuts and frayed seams during checking items. (See page RS–54)	Seatback cover
If the side airbag assembly has been found to be faulty during checking items. (See page RS–54)	Seatback assembly
If the seatback cover has been found to be faulty during checking items. (See page RS–54)	Seatback cover
If the seatback assembly has been dropped.	Seatback assembly

CAUTION:

For removal and installation of the seatback assembly, see page RS–52 and RS–57. Be sure to follow the correct procedure.

RS0EX–01

INSTALLATION

NOTICE:

Never use airbag parts from another vehicle. When replacing parts, replace them with new parts.

1. INSTALL SEATBACK ASSEMBLY

(a) Install the seatback assembly.

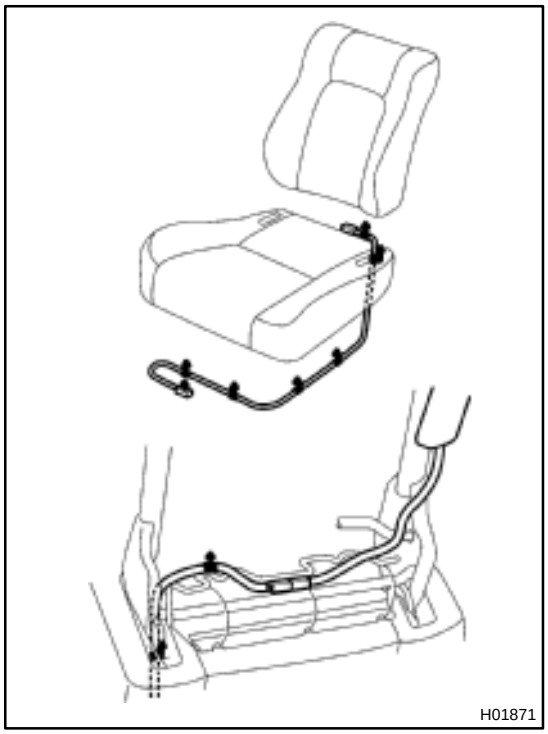

(b) Securely fix the side airbag sub wire harness to the seat cushion with clips.

(c) Connect the side airbag connector of the side airbag assembly side.

(d) Install new hog rings.

HINT:

Install the hog rings to prevent wrinkles as little as possible.

(e) Install the 4 bolts.

2. INSTALL FRONT SEAT CUSHION SHIELD

3. Manual adjuster type:
INSTALL VERTICAL ADJUSTER KNOB

4. Manual adjuster type:
INSTALL RELEASE HANDLE

5. Power adjuster type:
CONNECT CONNECTOR

Connect the connector to the power seat switch.

6. INSTALL FRONT SEAT CUSHION LOWER SHIELD

7. INSTALL HEADREST SUPPORT

8. INSTALL HEADREST

9. INSTALL FRONT SEAT

(a) Slide the front seat to the most front position.

NOTICE:

Make sure that seat adjuster locks.

(b) Without holding the seat track handle, mount the seat to the vehicle.

HINT:

If holding the seat track handle, the adjusted most front position will slip off.

(c) Tighten the bolts on the rear side temporarily, starting from the bolt on the inner side tighten them completely.
Torque: 37 N·m (375 kgf·cm, 27 ft·lbf)

(d) Slide the seat to the rearmost position to install the bolts on the front side.
Torque: 37 N·m (375 kgf·cm, 27 ft·lbf)

(e) Power adjuster type:
Connect the side airbag connector and power seat connector.

(f) Manual adjuster type:
Connect the side airbag connector.

AIRBAG SENSOR ASSEMBLY

COMPONENTS

RS01G–11

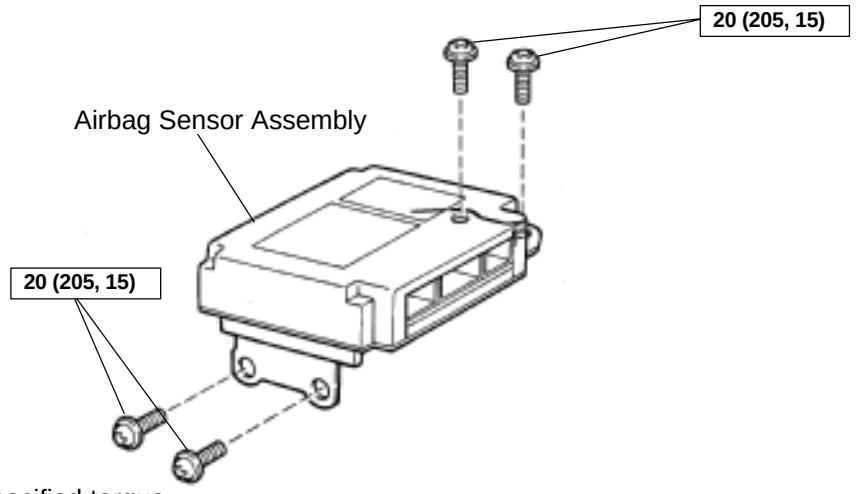

N·m (kgf·cm, ft·lbf) : Specified torque

H02269

RS0EY–01

REMOVAL

NOTICE:

Do not open the cover or the case of the ECU and various electrical devices unless absolutely necessary.
(If the IC terminals are touched, the IC may be destroyed by static electricity.)

LH side:

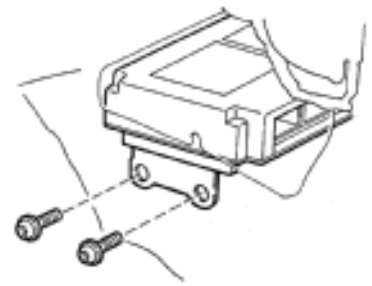

RH side:

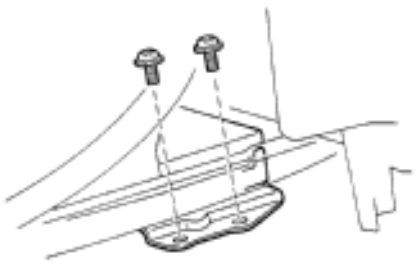

H02268 H08322

REMOVE AIRBAG SENSOR ASSEMBLY

(a) Disconnect the airbag sensor connectors.

NOTICE:

Disconnect the connectors with the sensor assembly installed.

(b) Using a torx wrench, remove the 4 screws and airbag sensor assembly.

Torx wrench: T40 (Part No.09042–00020 or locally manufactured tool)

RS05T–01

INSPECTION

1. VEHICLE NOT INVOLVED IN COLLISION

Do a diagnostic system check. (See page DI–626)

2. VEHICLE INVOLVED IN COLLISION AND AIRBAG IS NOT DEPLOYED

Do a diagnostic system check. (See page DI–626)

3. VEHICLE INVOLVED IN COLLISION AND AIRBAG IS DEPLOYED

Replace the airbag sensor assembly. (See page RS–59)

RS01J–13

REPLACEMENT

REPLACEMENT REQUIREMENTS

In the following cases, replace the airbag sensor assembly.

- If the SRS has been deployed in a collision.
- If the airbag sensor assembly has been found to be faulty in troubleshooting.
- If the airbag sensor assembly has been dropped.

CAUTION:

For removal and installation of the airbag sensor assembly, see page RS–59 and RS–62. Be sure to follow the correct procedure.

RS0EZ–01

INSTALLATION

NOTICE:

- **Never use SRS parts from another vehicle. When replacing parts, replace them with new parts.**
- **Never reuse the airbag sensor assembly involved in a collision when the airbag has deployed.**
- **Never repair a sensor in order to reuse it.**

LH side:

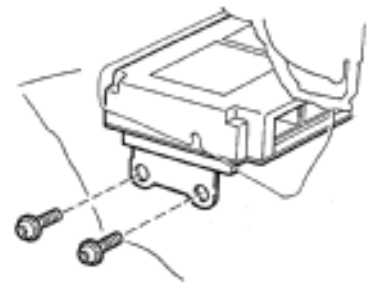

RH side:

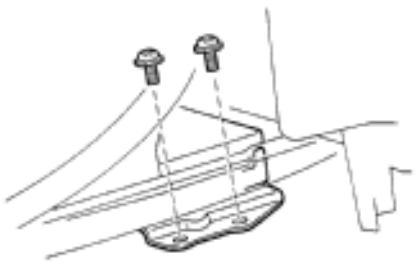

H02268 H08322

INSTALL AIRBAG SENSOR ASSEMBLY

(a) Using a torx wrench, install the airbag sensor assembly with 4 screws.
Torx wrench: T40 (Part No.09042–00020 or locally manufactured tool)
Torque: 20 N·m (205 kgf·cm, 15 ft·lbf)

(b) Connect the airbag sensor connectors.

NOTICE:

- **Connection of the connector is done after the sensor assembly has been installed.**
- **Make sure the sensor assembly is installed with the specified torque.**
- **If the sensor assembly has been dropped, or there are cracks, dents or other defects in the case, bracket or connector, replace the sensor assembly with a new one.**
- **When installing the sensor assembly, take care that the SRS wiring does not interfere with other parts and is not pinched between other parts.**
- **After installing , shake the sensor assembly to check that there is no looseness.**

FRONT AIRBAG SENSOR

RS01L–14

COMPONENTS

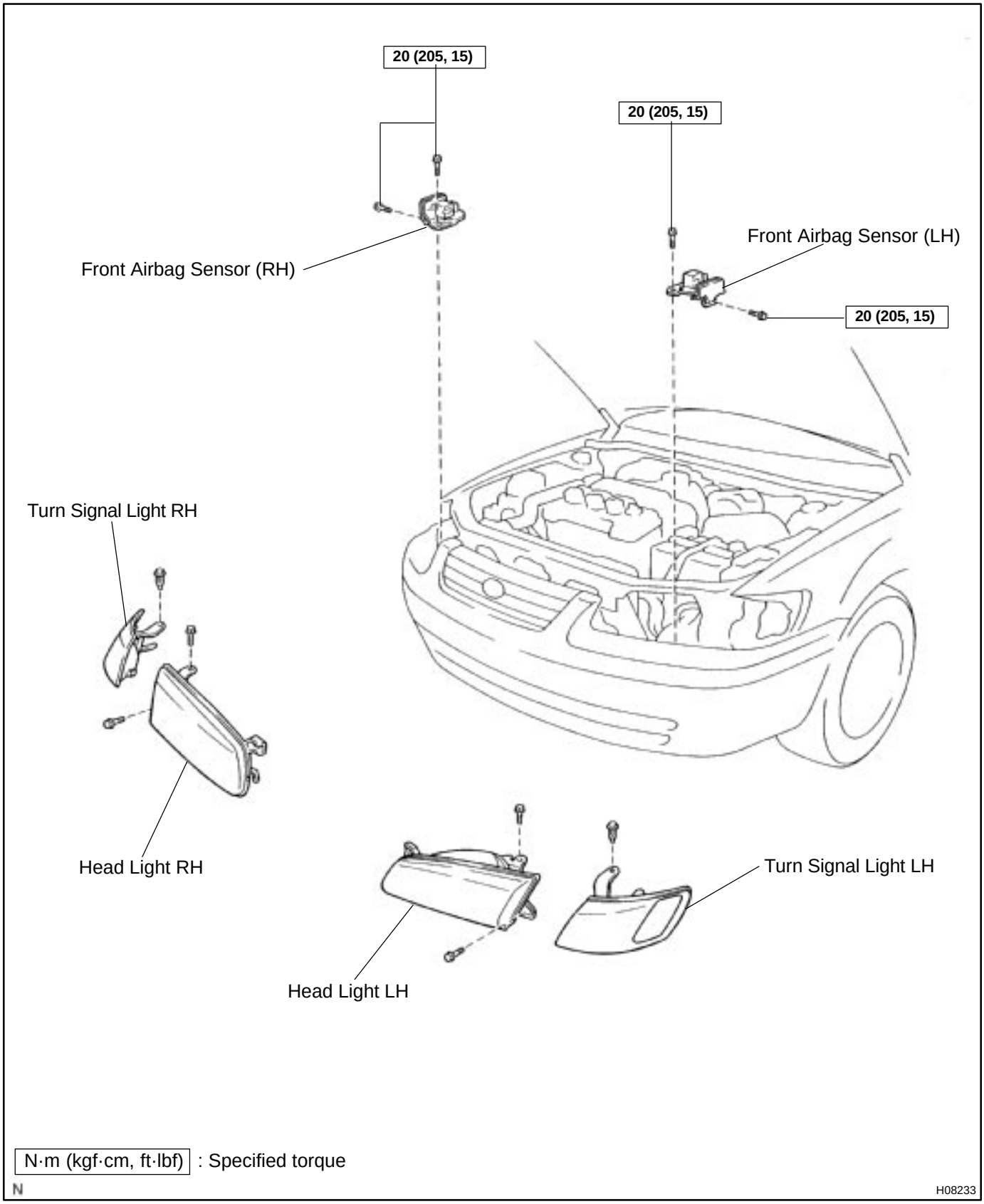

N·m (kgf·cm, ft·lbf) : Specified torque

N

H08233

RS0F0–01

REMOVAL

NOTICE:

- **If the wiring connector of the SRS is disconnected with the ignition switch at ON or ACC position, DTCs will be recorded.**
- **Never use SRS parts from another vehicle. When replacing parts, replace them with new parts.**
- **Never reuse the sensor involved in a collision when the SRS has deployed.**
- **Never repair a sensor in order to reuse it.**

1. REMOVE HEAD LIGHT LH AND RH

(a) Remove the 2 clips and turn signal lights.

(b) Remove the 4 bolts and head lights.

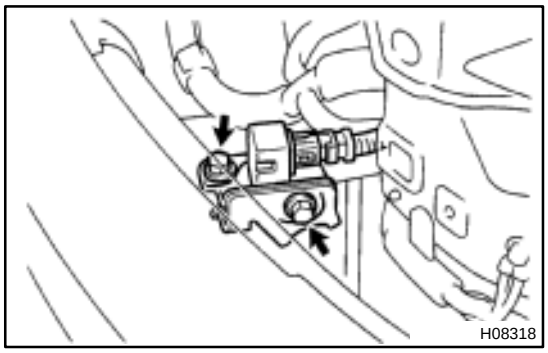

2. LH:

REMOVE FRONT AIRBAG SENSOR

(a) Disconnect the connector.

NOTICE:

Disconnect the connector with sensor assembly installed.

(b) Remove the 2 bolts and front airbag sensor LH.

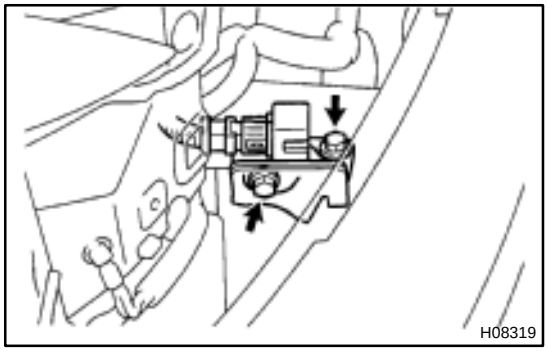

3. RH:

REMOVE FRONT AIRBAG SENSOR

(a) Disconnect the connector.

NOTICE:

Disconnect the connector with sensor assembly installed.

(b) Remove the 2 bolts and front airbag sensor RH.

RS01N–16

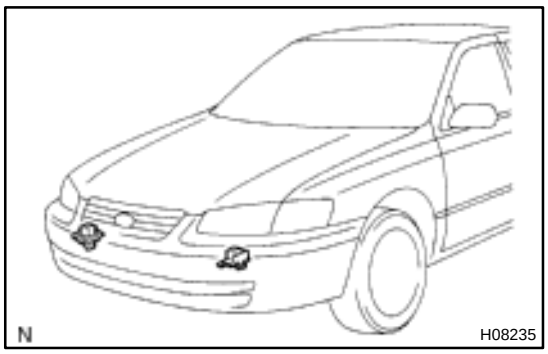

INSPECTION

1. VEHICLE NOT INVOLVED IN COLLISION

Do a diagnostic system check.

(See page DI–626)

2. VEHICLE INVOLVED IN COLLISION

(a) Do a diagnostic system check.

(See page DI–626)

(b) If the front fender of the car or its periphery is damaged, do a visual check for damage to the front airbag sensor, which includes the following items even if the airbag was not deployed:

- Bracket deformation
- Paint peeling off the bracket
- Cracks, dents or chips in the case
- Cracks, dents, chipping and scratches in the connector
- Peeling off of the label or damage to the serial number

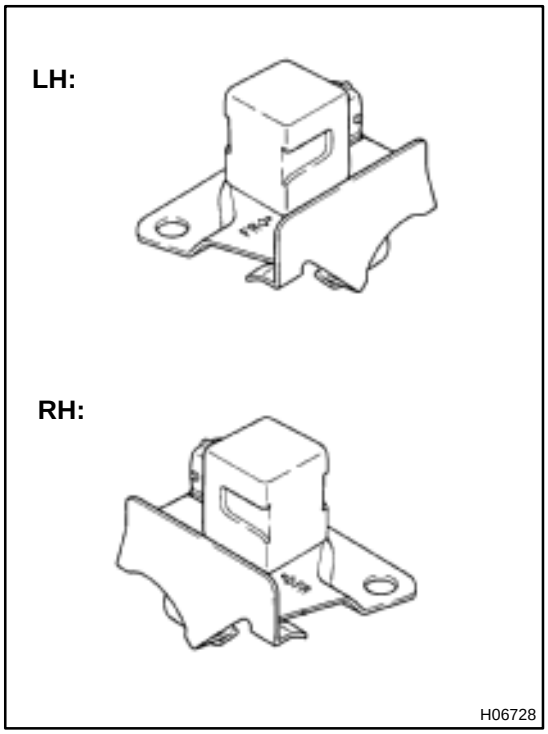

RS01O–10

REPLACEMENT

REPLACEMENT REQUIREMENTS

In the following cases, replace the front airbag sensor.

- If the SRS has been deployed in a collision. (Replace both the left and right airbag sensors.)
- If the front airbag sensor has been found to be faulty in troubleshooting.
- If the front airbag sensor has been found to be faulty during checking items.
  (See page RS–65)
- If the front airbag sensor has been dropped.

CAUTION:

For removal and installation of the front airbag sensor, see page RS–64 and RS–67. Be sure to follow the correct procedure.

RS01P–14

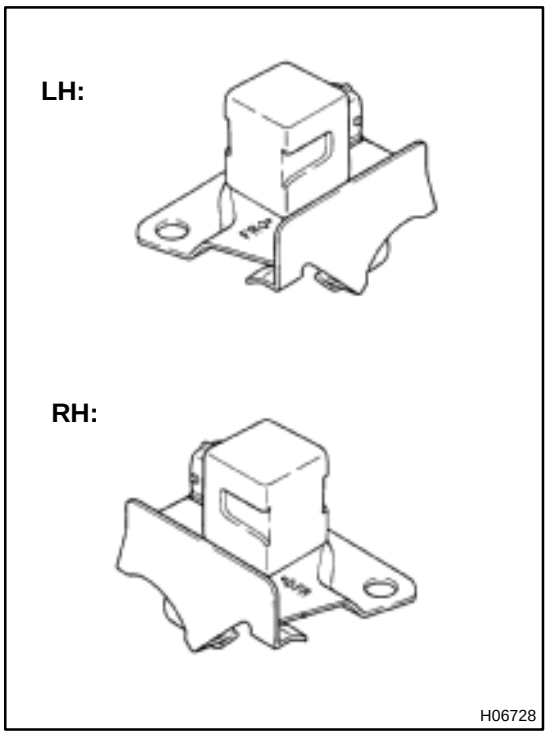

INSTALLATION

1. INSTALL FRONT AIRBAG SENSOR LH AND RH

(a) Install the front airbag sensor with the arrow on the sensor facing toward the front of the vehicle.

Torque: 20 N·m (205 kgf·cm, 15 ft·lbf)

NOTICE:

- **Connection of the connector is done after the sensor assembly has been installed.**
- **Make sure the sensor is installed with the specified torque.**
- **If the sensor has been dropped, or there are cracks, dents or other defects in the case, brackets or connector, replace the removed sensor with a new one.**
- **The front sensor is equipped with an electrical connection check mechanism. Be sure to lock this mechanism securely when connecting the connector. If the connector is not securely locked, a malfunction code will be detected by the diagnostic system.**

(b) Connect the front airbag sensor connector.

2. INSTALL HEAD LIGHT LH AND RH

(See page BE–28)

3. INSTALL TURN SIGNAL LIGHT LH AND RH

SIDE AIRBAG SENSOR ASSEMBLY

RS01Q–06

COMPONENTS

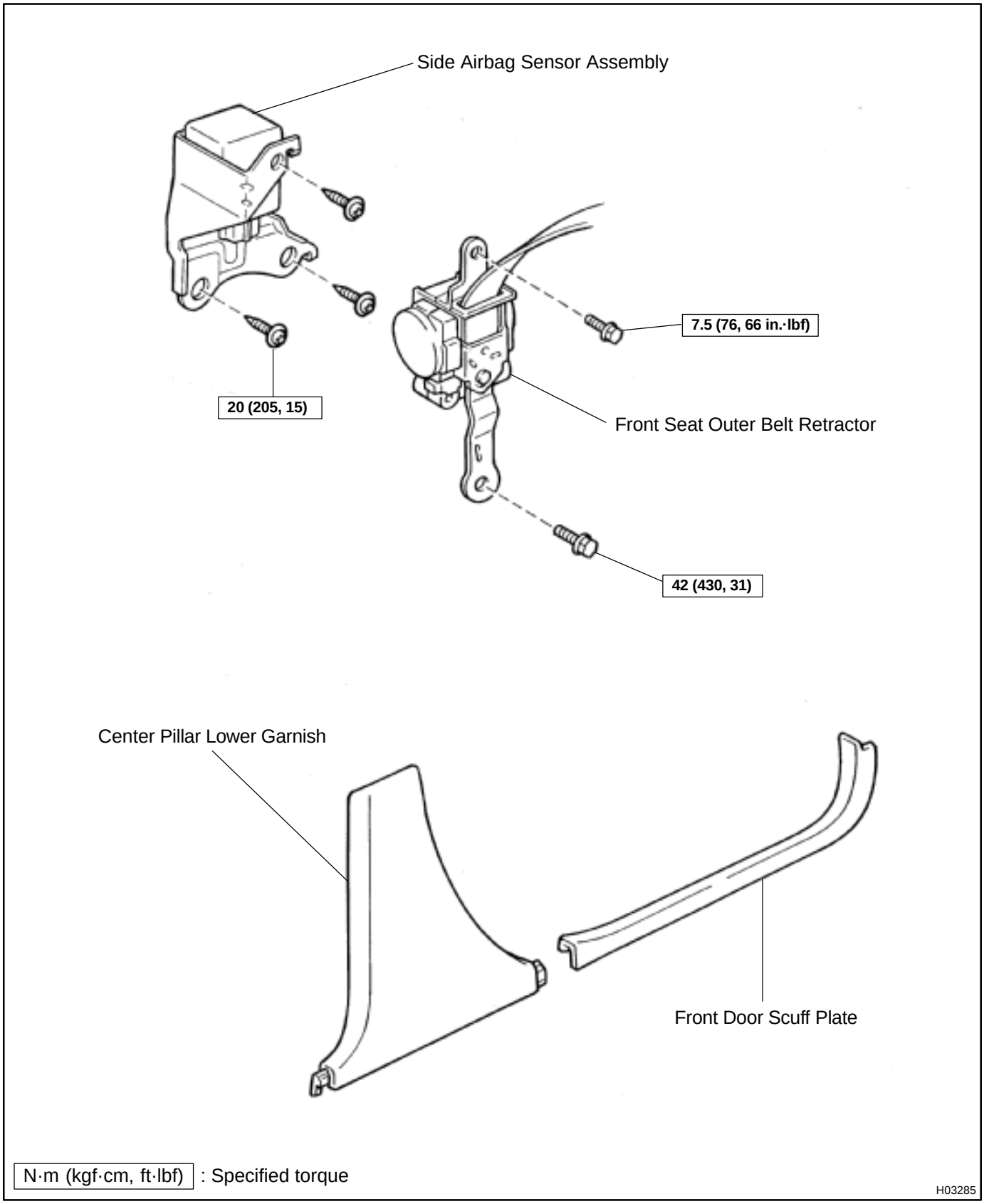

N·m (kgf·cm, ft·lbf) : Specified torque

H03285

RS01R–05

REMOVAL

NOTICE:

Do not open the cover or the case of the ECU and various electrical devices unless absolutely necessary.
(If the IC terminals are touched, the IC may be destroyed by static electricity.)

1. REMOVE FRONT DOOR SCUFF PLATE

2. REMOVE CENTER PILLAR LOWER GARNISH

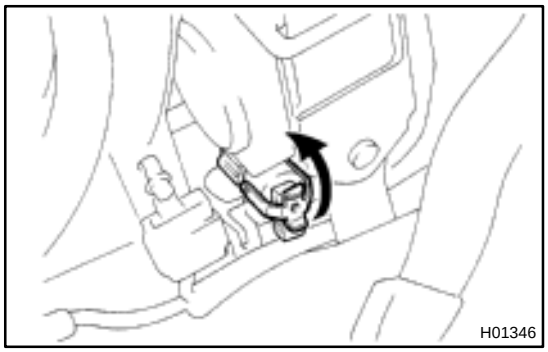

3. REMOVE FRONT SEAT OUTER BELT RETRACTOR (See page BO–126)

(a) Disconnect the pretensioner connector.

(b) Remove the 2 bolts and retractor.

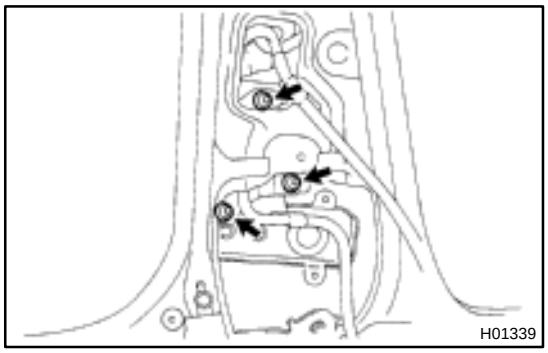

4. REMOVE SIDE AIRBAG SENSOR ASSEMBLY

(a) Disconnect the side airbag sensor assembly connector.

NOTICE:

Disconnect the connector with the sensor assembly installed.

(b) Using a torx wrench, remove the 3 screws and side airbag sensor assembly.

Torx wrench: T40 (Part No.09042–00020 or locally manufactured tool)

RS05V–03

INSPECTION

1. VEHICLE NOT INVOLVED IN COLLISION

Do a diagnostic system check. (See page DI–626)

2. VEHICLE INVOLVED IN COLLISION AND AIRBAG IS NOT DEPLOYED

Do a diagnostic system check. (See page DI–626)

3. VEHICLE INVOLVED IN COLLISION AND AIRBAG IS DEPLOYED

Replace the side airbag sensor assembly. (See page RS–69)

RS01T–06

REPLACEMENT

REPLACEMENT REQUIREMENTS

In the following cases, replace the side airbag sensor assembly.

- If the side airbag sensor assembly has been deployed in a collision.
- If the side airbag sensor assembly has been found to be faulty in troubleshooting.
- If the side airbag sensor assembly has been dropped.

CAUTION:

For removal and installation of the side airbag sensor assembly, see page RS–69 and RS–72. Be sure to follow the correct procedure.

RS05W–02

INSTALLATION

NOTICE:

- **Never use SRS parts from another vehicle. When replacing parts, replace them with new ones.**
- **Never reuse the side airbag sensor assembly involved in a collision when the airbag has deployed.**
- **Never repair a sensor in order to reuse it.**

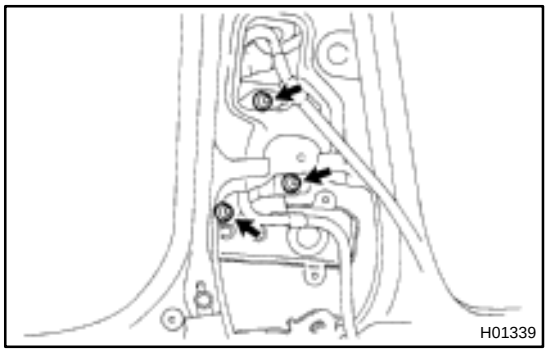

1. INSTALL SIDE AIRBAG SENSOR ASSEMBLY

(a) Using a torx wrench, install the side airbag sensor assembly with the 3 screws.

Torx wrench: T40 (Part No.09042–00020 or locally manufactured tool)

Torque: 20 N·m (205 kgf·cm, 15 ft·lbf)

(b) Connect the side airbag sensor assembly connector.

NOTICE:

- **Connection of the connector is done after the sensor assembly has been installed. Make sure the sensor assembly is installed with the specified torque.**
- **If the sensor assembly has been dropped, or there are cracks, dents or other defects in the case, bracket or connector, replace the sensor assembly with a new one.**
- **When installing the sensor assembly, take care that the SRS wiring does not interfere with other parts and is not pinched between other parts.**
- **After installation, shake the sensor assembly to check that there is no looseness.**

2. INSTALL FRONT SEAT OUTER BELT RETRACTOR (See page BO–134)

(a) Install the retractor with the 2 bolts.

Torque:

Upper bolt: 7.5 N·m (76 kgf·cm, 66 in.·lbf)

Lower bolt: 42 N·m (430 kgf·cm, 31 ft·lbf)

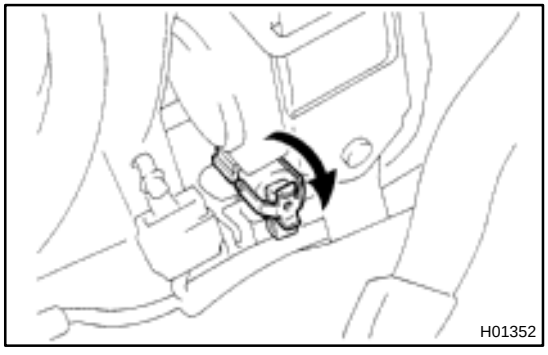

(b) Connect the pretensioner connector.

3. INSTALL CENTER PILLAR LOWER GARNISH

4. INSTALL FRONT DOOR SCUFF PLATE

WIRE HARNESS AND CONNECTOR

RS01V–11

LOCATION

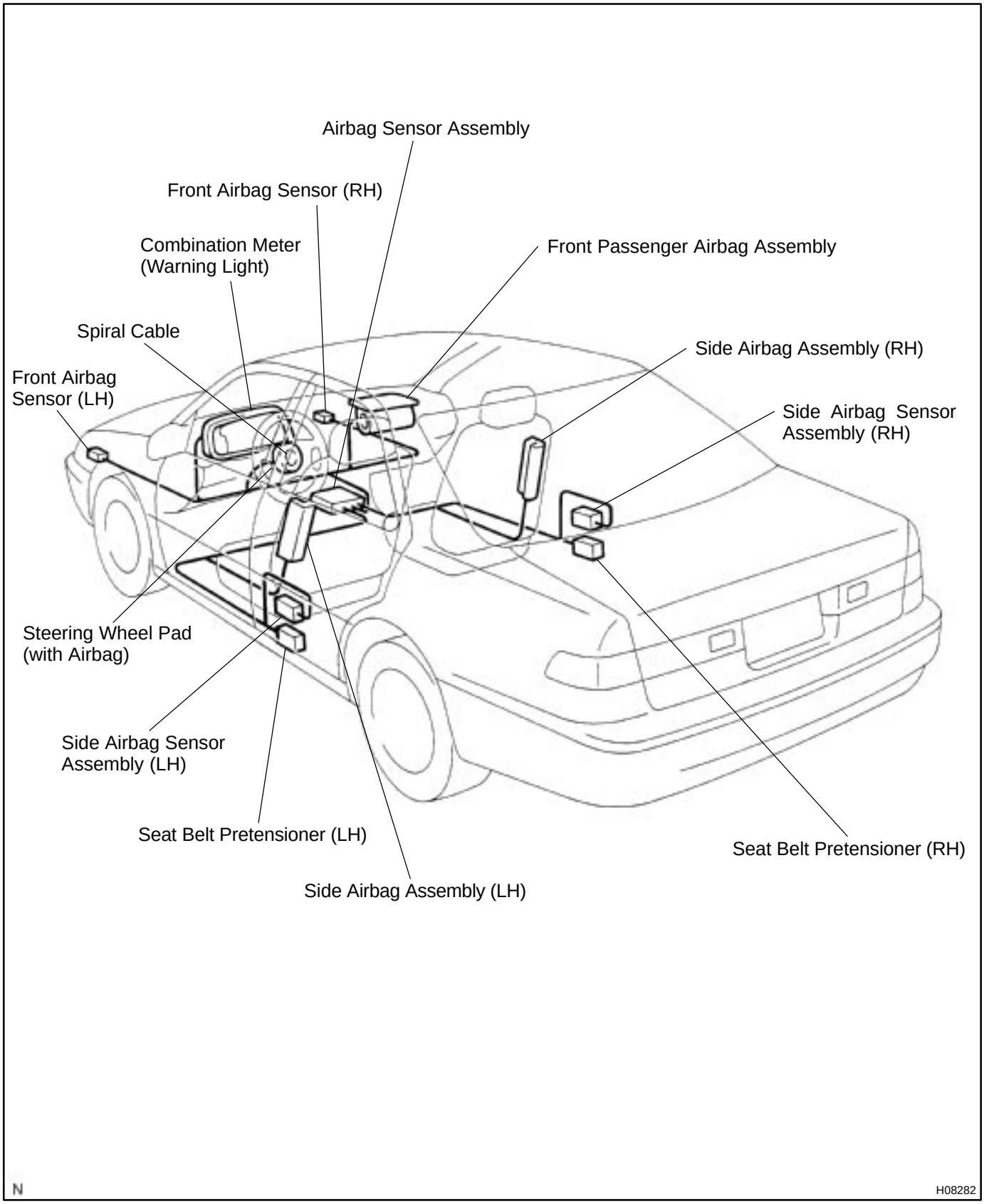

RS01W–09

INSPECTION

HINT:

The SRS wire harness is integrated with the instrument panel wire harness assembly. All the connectors in the system are a standard yellow color.

1. VEHICLE NOT INVOLVED IN COLLISION

Do a diagnostic system check. (See page DI–626)

2. VEHICLE INVOLVED IN COLLISION

(a) Do a diagnostic system check. (See page DI–626)

(b) Check breaks in all wires of the SRS wire harness, and exposed conductors.

(c) Check to see if the SRS wire harness connectors are cracked or chipped.

RS01X–09

REPLACEMENT

In the following cases, replace the wire harness or connector.

- If any part of the SRS wire harness or any connector has been found to be faulty in troubleshooting.
- If any part of the SRS wire harness or any connector has been found to be faulty during checking items. (See page RS–74)

CAUTION:

If the wire harness used in the SRS is damaged, replace the whole wire harness assembly.

STARTING SYSTEM

ST03H–01

ON–VEHICLE INSPECTION

NOTICE:

Before changing the starter, check the following items again:

- **Connector connection**
- **Accessory installation, e.g.: theft deterrent system**

STARTER

COMPONENTS

ST03I–04

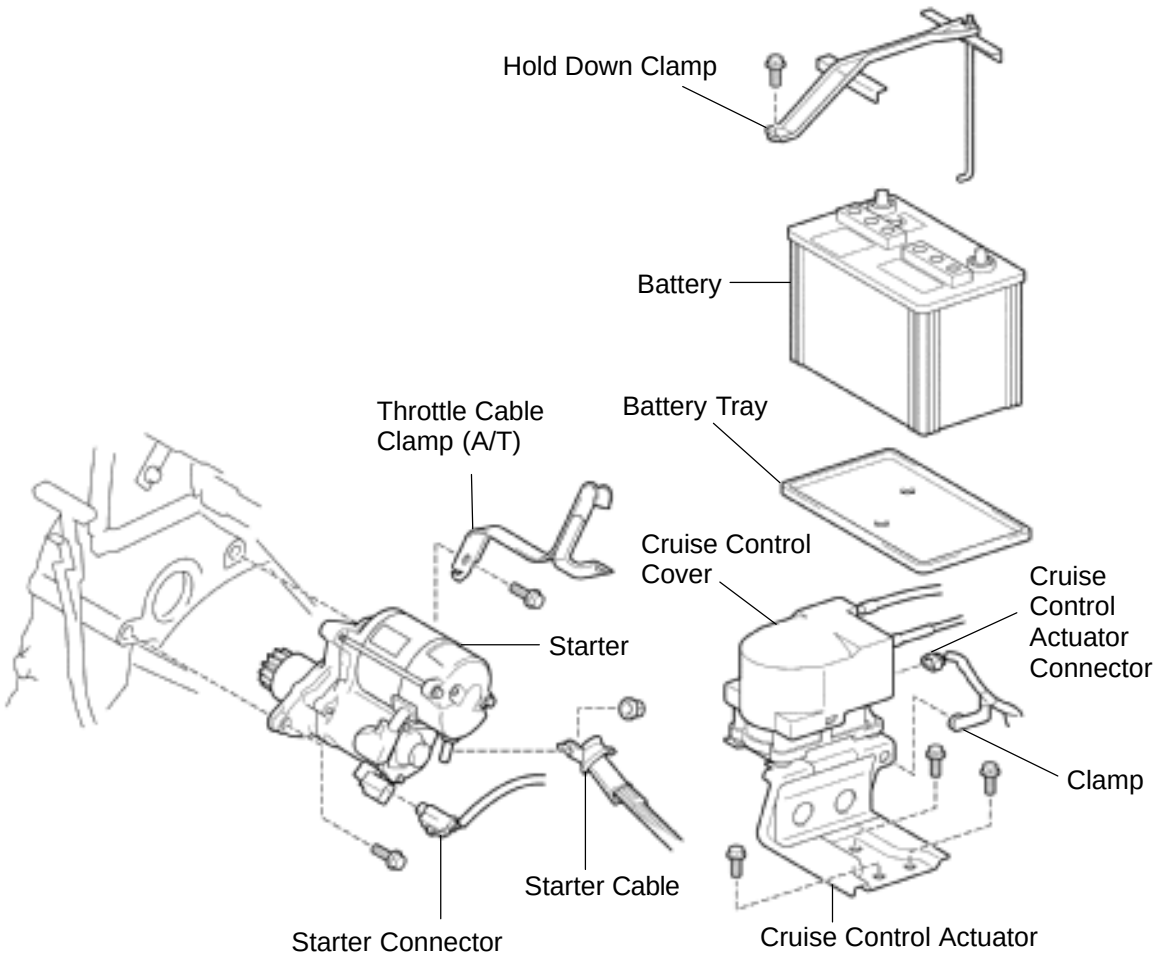

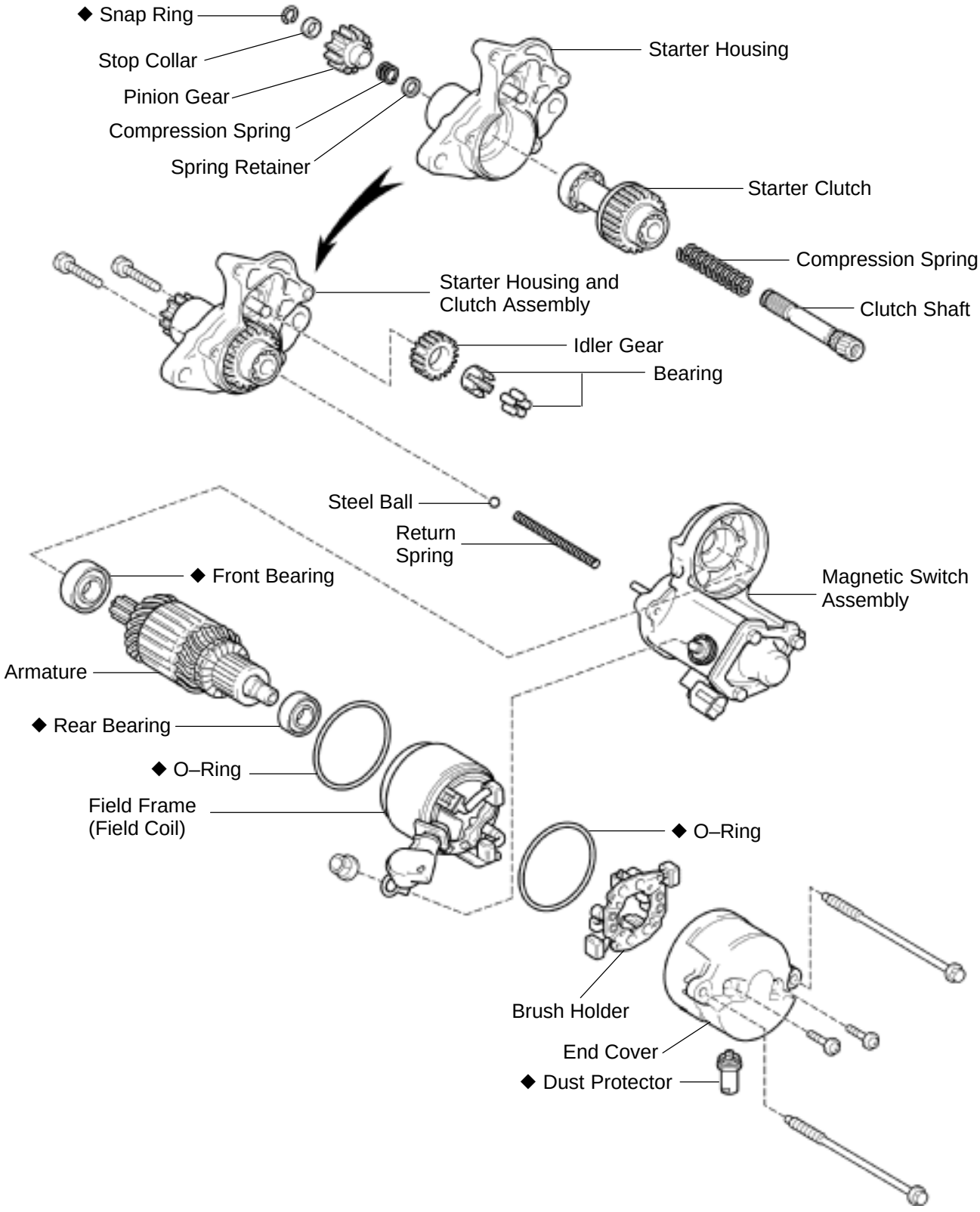
◆ Snap Ring
Stop Collar
Pinion Gear
Compression Spring
Spring Retainer
Starter Housing
Starter Clutch
Compression Spring
Clutch Shaft
Starter Housing and Clutch Assembly
Idler Gear
Bearing
Steel Ball
Return Spring
◆ Front Bearing
Magnetic Switch Assembly
Armature
◆ Rear Bearing
◆ O–Ring
Field Frame (Field Coil)
◆ O–Ring
Brush Holder
End Cover
◆ Dust Protector
◆ Non–reusable part
B01154

Magnetic Switch Assembly

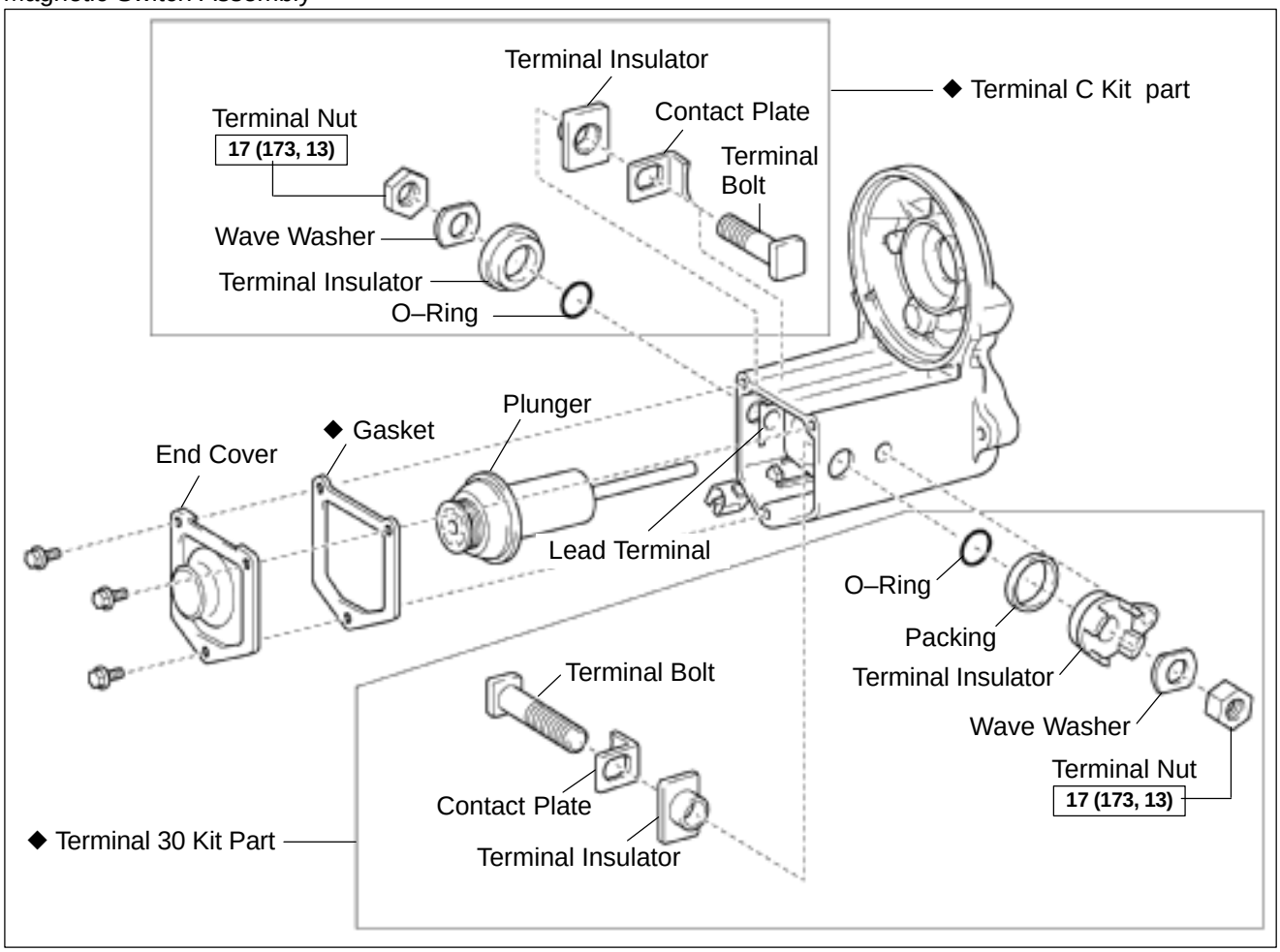

N·m (kgf·cm, ft·lbf) : Specified torque
◆ Non–reusable part

B06418

ST03J–01

REMOVAL

1. REMOVE BATTERY AND TRAY

2. w/ CRUISE CONTROL SYSTEM:
REMOVE CRUISE CONTROL ACTUATOR

(a) Disconnect the actuator connector and clamp.

(b) Remove the 3 bolts, and disconnect the actuator with the bracket.

3. REMOVE STARTER

(a) Disconnect the starter connector.

(b) Remove the 2 bolts, throttle cable clamp (A/T) and starter.

(c) Remove the nut, and disconnect the starter cable.
Torque: 37 N·m (380 kgf·cm, 27 ft·lbf)

ST03K–01

DISASSEMBLY

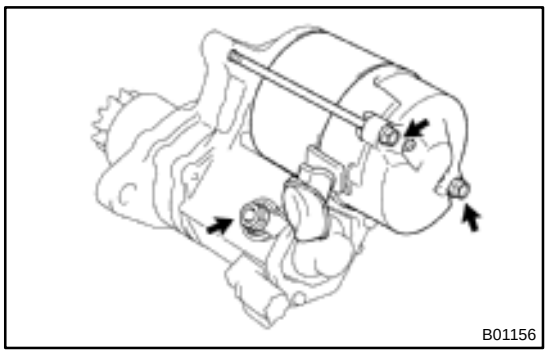

1. REMOVE DUST PROTECTOR

2. REMOVE FIELD FRAME AND ARMATURE

(a) Remove the nut, and disconnect the lead wire from the magnetic switch terminal.
Torque: 5.9 N·m (60 kgf·cm, 52 in.·lbf)

(b) Remove the 2 through bolts.
Torque: 5.9 N·m (60 kgf·cm, 52 in.·lbf)

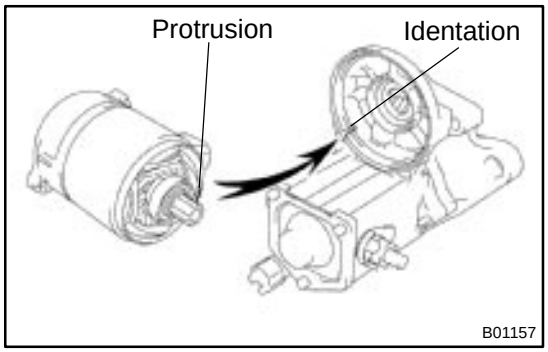

(c) Pull out the field frame together with the armature.

HINT:

Align the protrusion of the field frame with the identation of the magnetic switch.

(d) Remove the O–ring from the field frame.

HINT:

At the time of installation, please refer to following items. Use a new O–ring.

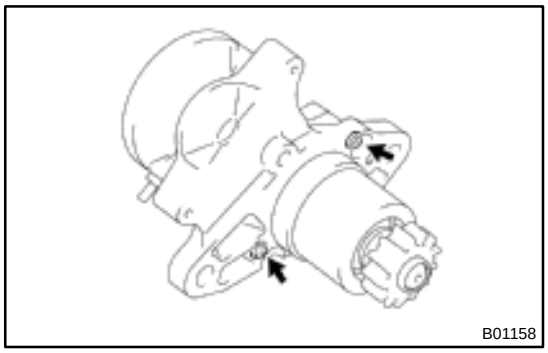

3. REMOVE STARTER HOUSING, CLUTCH ASSEMBLY AND GEAR

(a) Remove the 2 screws.
Torque: 5.9 N·m (60 kgf·cm, 52 in.·lbf)

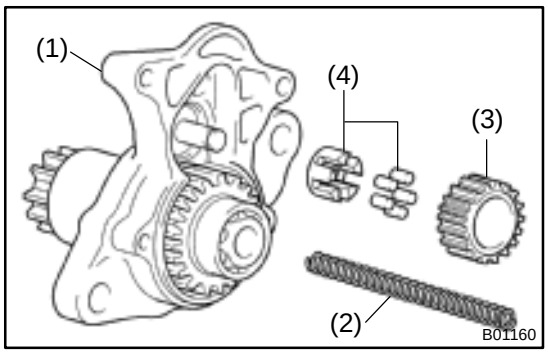

(b) Remove these parts from the magnetic switch:
(1) Starter housing and clutch assembly
(2) Return spring
(3) Idler gear
(4) Bearing

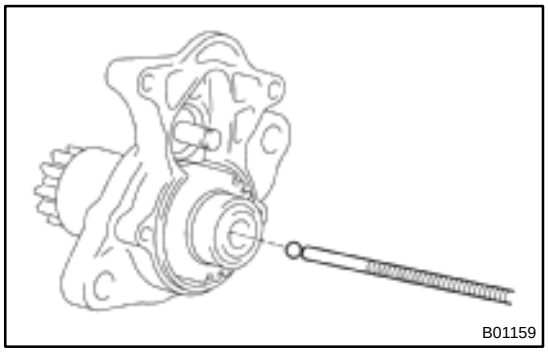

4. REMOVE STEEL BALL

Using a magnetic finger, remove the steel ball from the clutch shaft hole.

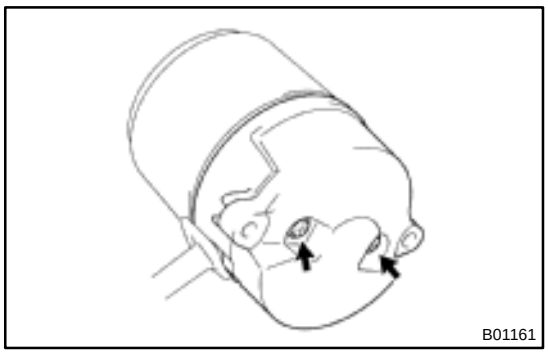

5. REMOVE BRUSH HOLDER

(a) Remove the 2 screws and end cover from the field frame.
Torque: 1.5 N·m (15 kgf·cm, 13 in.·lbf)

(b) Remove the O–ring from the field frame.

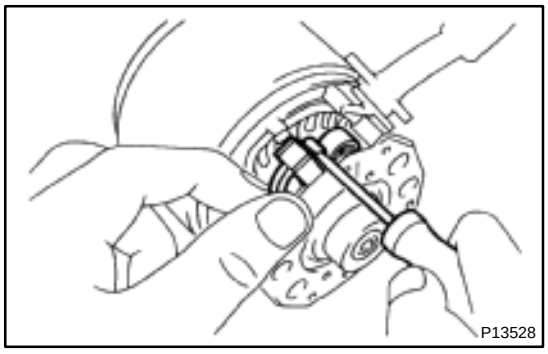

(c) Using a screwdriver, hold the spring back and disconnect the brush from the brush holder. Disconnect the 4 brushes, and remove the brush holder.

NOTICE:

Check that the positive (+) lead wires are not grounded.

6. REMOVE ARMATURE FROM FIELD FRAME

ST03L–03

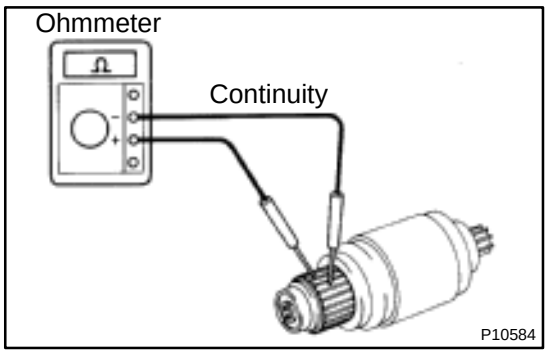

INSPECTION

1. INSPECT ARMATURE COIL

(a) Check the commutator for open circuit.
Using an ohmmeter, check that there is continuity between the segments of the commutator.

If there is no continuity between any segment, replace the armature.

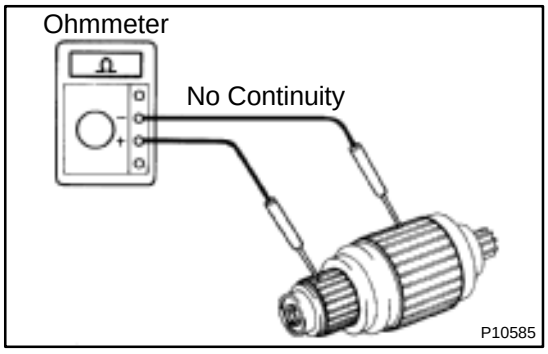

(b) Check the commutator for ground.
Using an ohmmeter, check that there is no continuity between the commutator and armature coil core.

If there is continuity, replace the armature.

2. INSPECT COMMUTATOR

(a) Check the commutator for the dirty and burnt surfaces.

If the surface is dirty or burnt, correct it with sandpaper (No.400) or on a lathe.

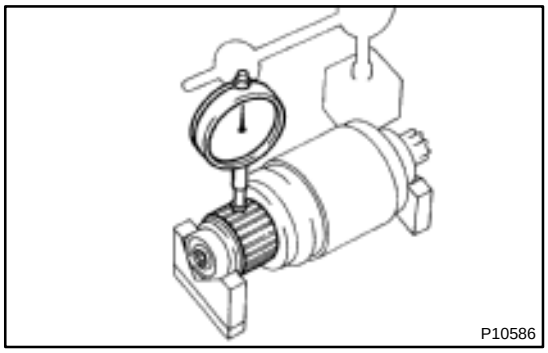

(b) Check for the commutator circle runout.
(1) Place the commutator on V–blocks.
(2) Using a dial gauge, measure the circle runout.
Maximum circle runout: 0.05 mm (0.0020 in.)

If the circle runout is greater than maximum, correct it on a lathe.

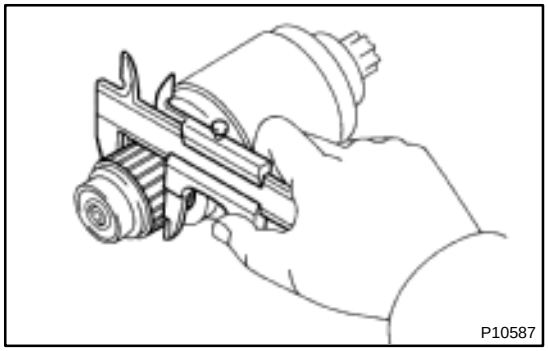

(c) Using vernier calipers, measure the commutator diameter.
Standard diameter: 30.0 mm (1.181 in.)
Minimum diameter: 29.0 mm (1.142 in.)

If the diameter is less than minimum, replace the armature.

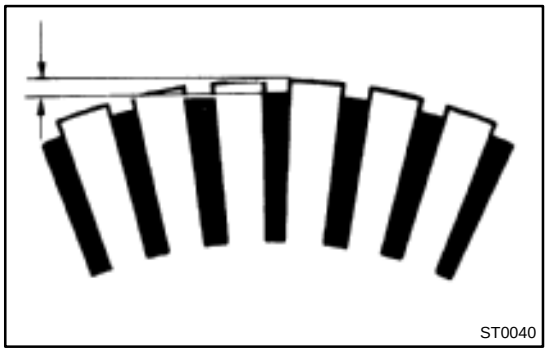

(d) Check that the undercut depth is clean and free of foreign materials. Smooth out the edge.
Standard undercut depth: 0.6 mm (0.024 in.)
Minimum undercut depth: 0.2 mm (0.008 in.)

If the undercut depth is less than minimum, correct it with a hacksaw blade.

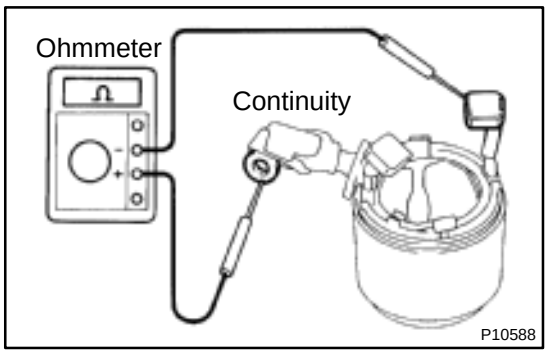

3. INSPECT FIELD COIL

(a) Check the field coil for open circuit.

Using an ohmmeter, check that there is continuity between the lead wire and field coil brush lead.

If there is no continuity, replace the field frame.

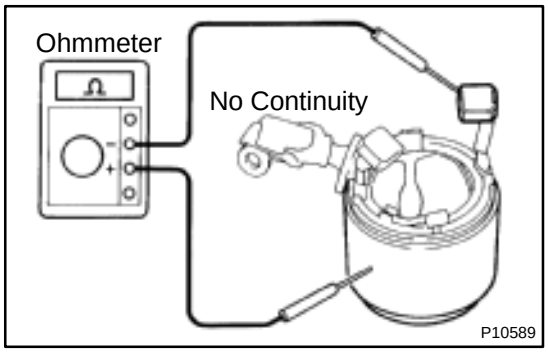

(b) Check the field coil for ground.

Using an ohmmeter, check that there is no continuity between the field coil end and field frame.

If there is continuity, repair or replace the field frame.

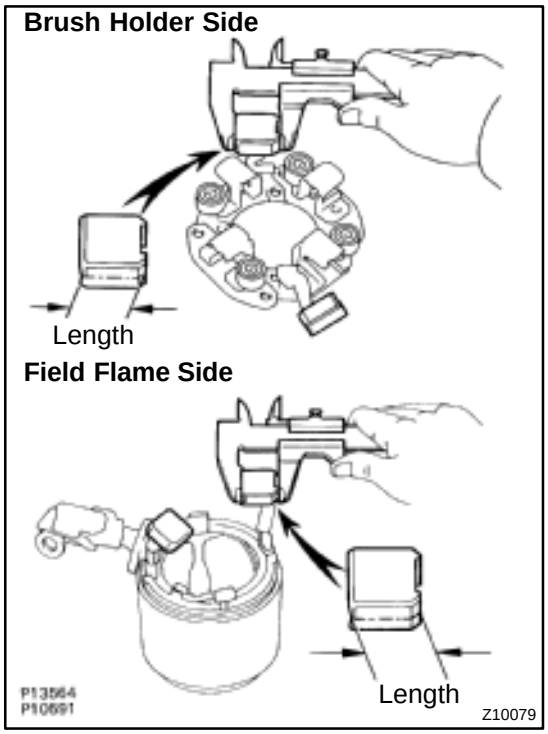

4. INSPECT BRUSHES

Using vernier calipers, measure the brush length.

Standard length: 15.5 mm (0.610 in.)

Minimum length: 10.0 mm (0.394 in.)

If the length is less than minimum, replace the brush holder and field frame.

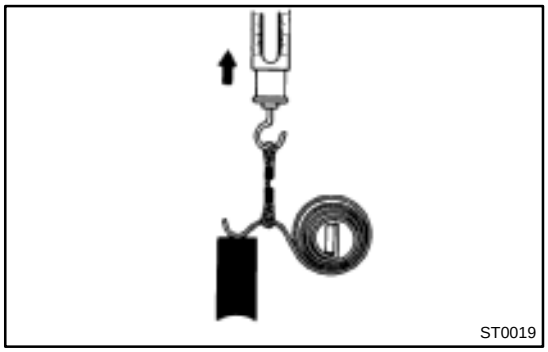

5. INSPECT BRUSH SPRINGS

Check the brush spring load.

Take the pull scale reading the instant the brush spring separates from the brush.

Standard spring installed load:

1.2 kW	13.7 – 19.6 N (1.4 – 2.0 kgf, 3.0 – 4.4 lbf)
1.4 kW	17.6 – 23.5 N (1.8 – 2.4 kgf, 3.9 – 5.3 lbf)

Minimum spring installed load:

1.2 kW	9.8 N (1.0 kgf, 2.2 lbf)
1.4 kW	11.8 N (1.2 kgf, 2.6 lbf)

If the installed load is less than minimum, replace the brush springs.

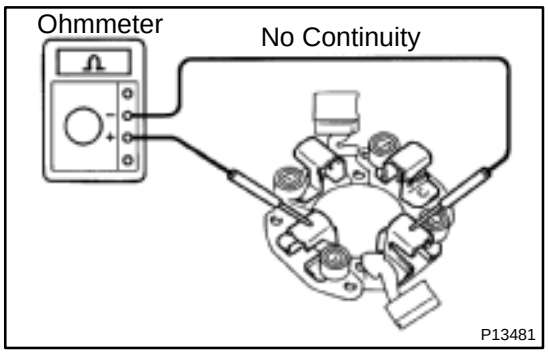

6. INSPECT BRUSH HOLDER

Check the brush holder insulation.

Using an ohmmeter, check that there is no continuity between the positive (+) and negative (–) brush holders.

If there is continuity, repair or replace the brush holder.

7. INSPECT CLUTCH AND GEAR

(a) Check the gear teeth on the pinion gear, idler gear and clutch assembly for wear or damage.

If damaged, replace the gear or clutch assembly.

If damaged, also check the ring gear of the flywheel/drive plate for wear or damage.

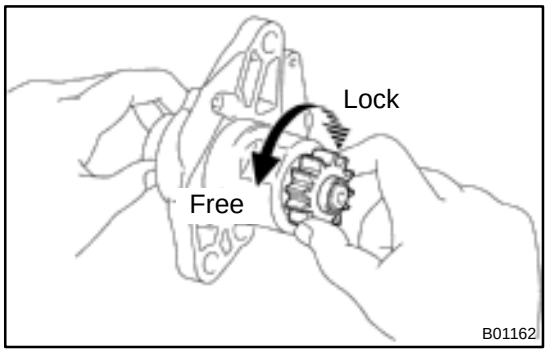

(b) Check the clutch pinion gear.

Hold the starter clutch and rotate the pinion gear counterclockwise, and check that it turns freely. Try to rotate the pinion gear clockwise and check that it locks.

If necessary, replace the clutch assembly.

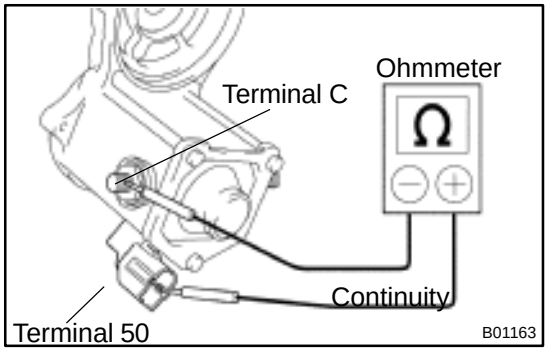

8. INSPECT MAGNETIC SWITCH

(a) Check the pull–in coil for open circuit.

Using an ohmmeter, check that there is continuity between terminals 50 and C.

If there is no continuity, check and replace the magnetic switch.

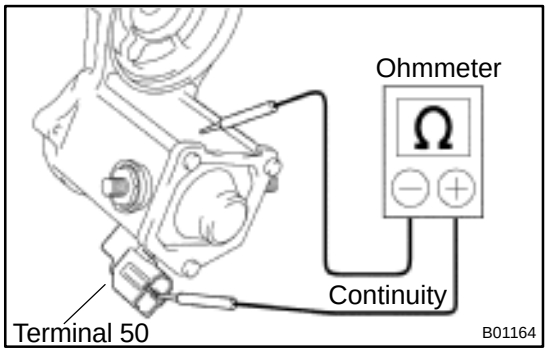

(b) Check the hold–in coil for open circuit.

Using an ohmmeter, check that there is continuity between terminal 50 and the switch body.

If there is no continuity, replace the magnetic switch.

9. INSPECT BEARING

Turn the bearing by hand while applying inward force.

If resistance is felt or the bearing sticks, replace the bearing.

(See page ST–11)

ST03M–03

REPLACEMENT

1. REPLACE CLUTCH ASSEMBLY

(a) Disassemble the starter housing and the clutch assembly.

(1) Mount a brass bar in a vise, and install the starter housing and clutch assembly to the brass bar.

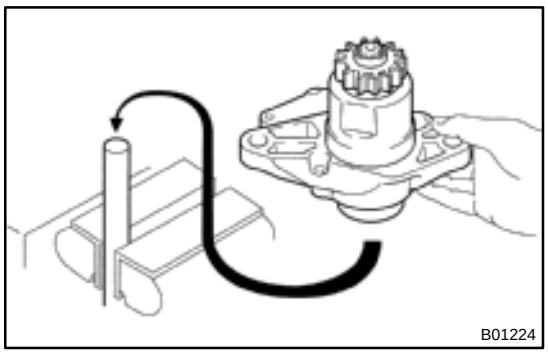

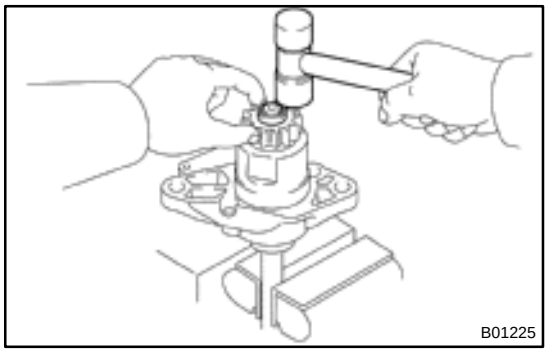

(2) Push down the pinion gear.

(3) Using a plastic–faced hammer, tap down the stop collar.

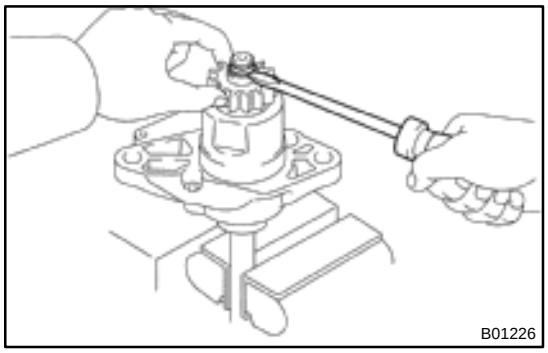

(4) Using a screwdriver, pry out the snap ring.

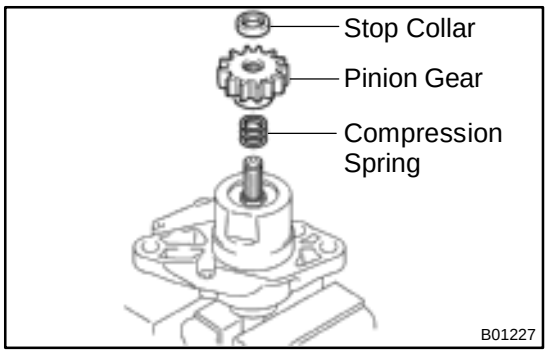

(5) Remove these parts:

- Stop collar
- Pinion gear
- Compression spring

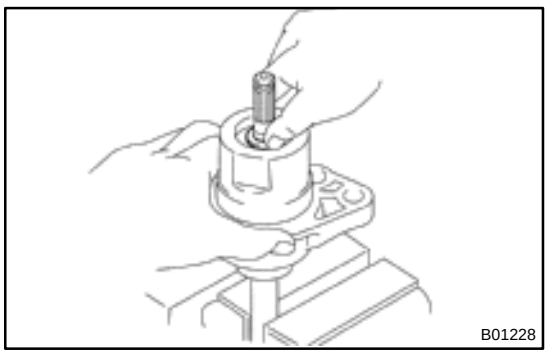

(6) Push down the starter housing, and remove the spring retainer.

(7) Disassemble these parts:

- Starter housing
- Starter clutch
- Compression spring
- Clutch shaft

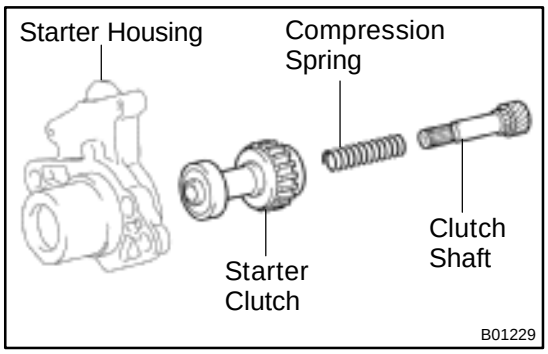

(b) Assemble the starter housing and the clutch assembly
(1) Assemble these parts:
- Starter housing
- Starter clutch
- Compression spring
- Clutch shaft

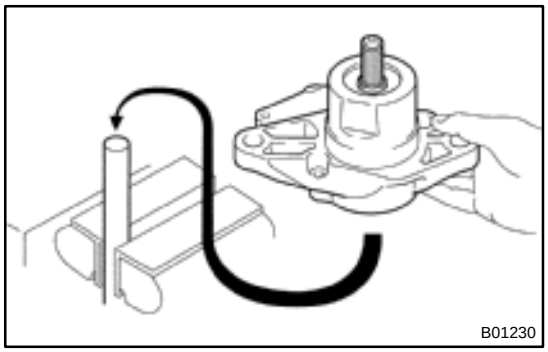

(2) Mount a brass bar in a vise, install the starter housing and clutch assembly to the brass bar.

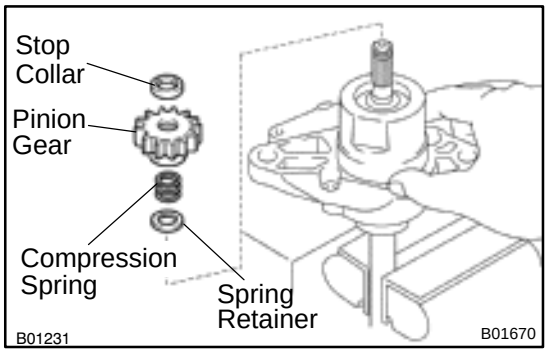

(3) Push down the starter housing, and install these parts:
- Spring retainer
- Compression spring
- Pinion gear
- Stop collar

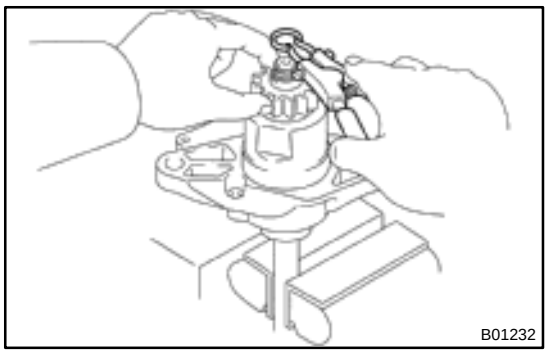

(4) Push down the pinion gear.
(5) Using snap ring pliers, install a new snap ring.

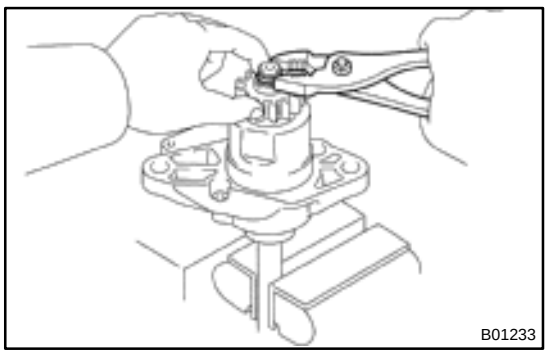

(6) Using pliers, compress the snap ring.
(7) Check that the snap ring fits correctly.

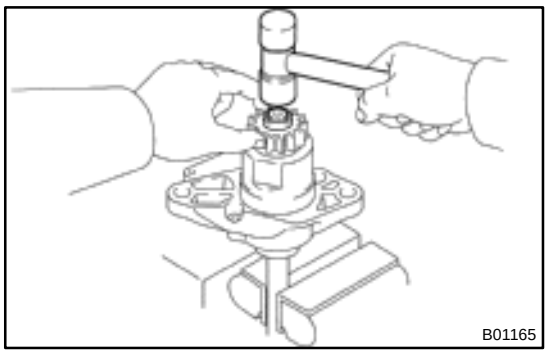

(8) Remove the starter housing and clutch assembly from the brass bar.
(9) Using a plastic–faced hammer, tap the clutch shaft and install the stop collar onto the snap ring.

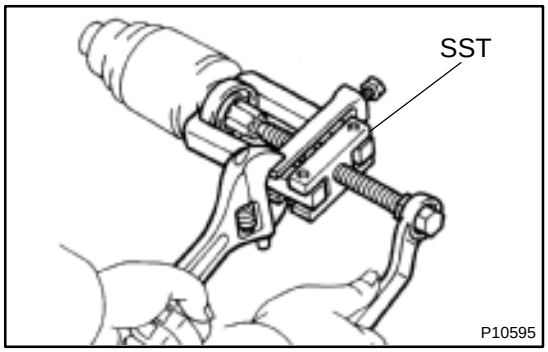

2. REPLACE FRONT BEARING

(a) Using SST, remove the bearing.
SST 09286–46011

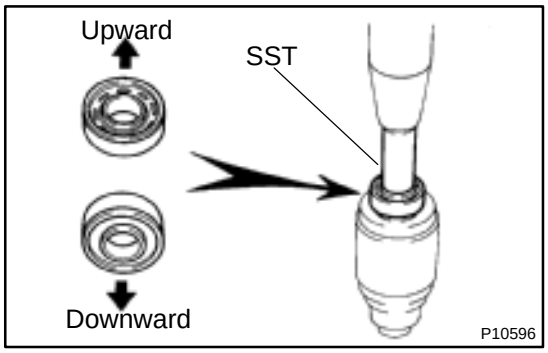

(b) Using SST and a press, press in a new bearing.

NOTICE:

Be careful of the bearing installation direction.

SST 09820–00030

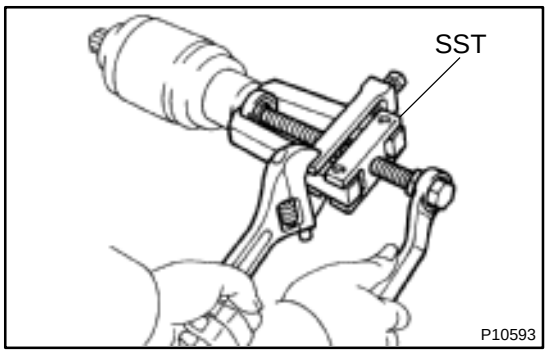

3. REPLACE REAR BEARING

(a) Using SST, remove the bearing.
SST 09286–46011

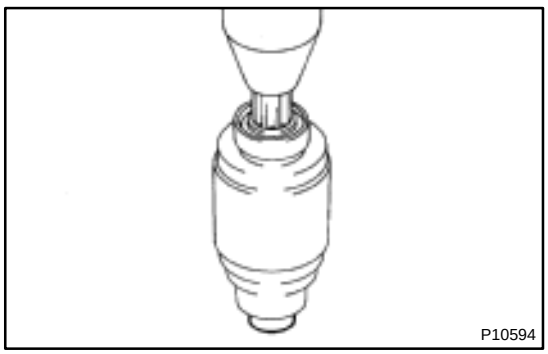

(b) Using a press, press in a new bearing.

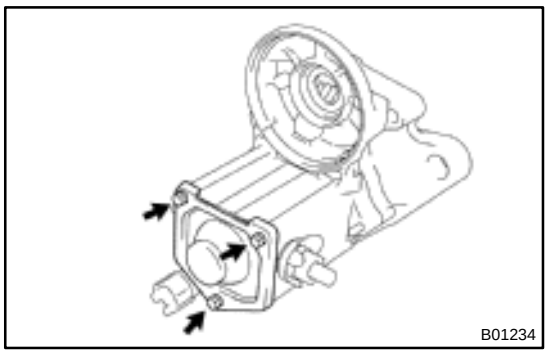

4. REPLACE MAGNETIC SWITCH TERMINAL KIT PARTS

(a) Remove the 3 bolts, end cover, gasket and plunger.

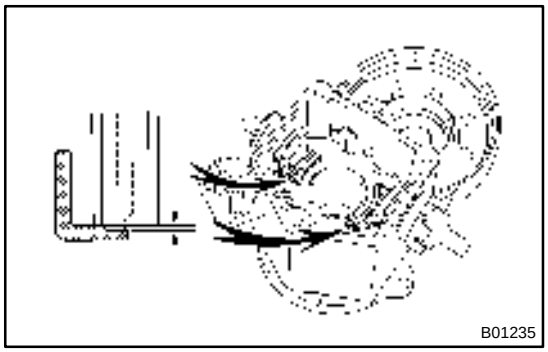

(b) Using vernier calipers, measure the contact plate for depth of wear.

Maximum wear: 0.9 mm (0.035 in.)

If the depth of wear is greater than the maximum, replace the contact plate.

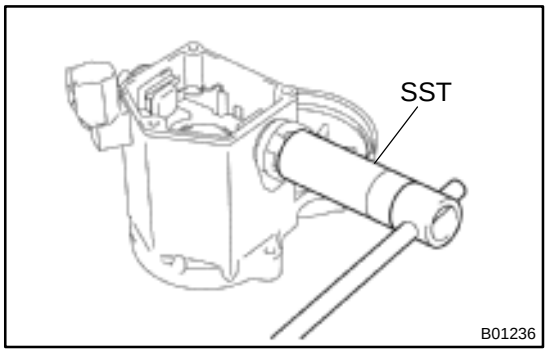

(c) Remove the terminal kit parts.

(1) Using SST, loosen the terminal nuts.

SST 09810–38140

(2) Terminal C:
Remove the terminal nut, wave washer, terminal insulator (outside), O–ring, terminal bolt, contact plate and terminal insulator (inside).

(3) Terminal 30:
Remove the terminal nut, wave washer, terminal insulator (outside), packing, O–ring, terminal bolt, contact plate, terminal insulator (inside).

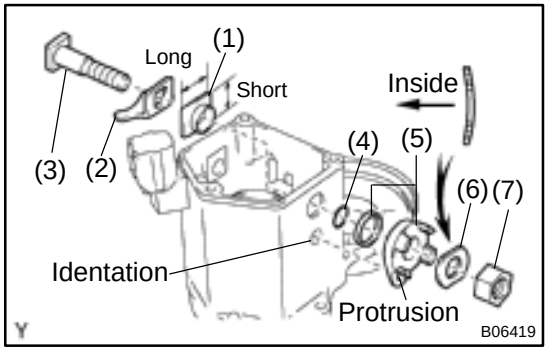

(d) Temporarily install these new terminal 30 kit parts:

(1) Terminal insulator (inside)
(2) Contact plate
(3) Terminal bolt
(4) O–ring
(5) Packing and terminal insulator (outside)
Install the packing to the terminal insulator, and install them.

HINT:
Match the protrusion of the insulator with the indentation of the housing.

(6) Wave washer
(7) Terminal nut

NOTICE:
Be careful to install the terminal insulators (inside) and wave washers in the correct direction.

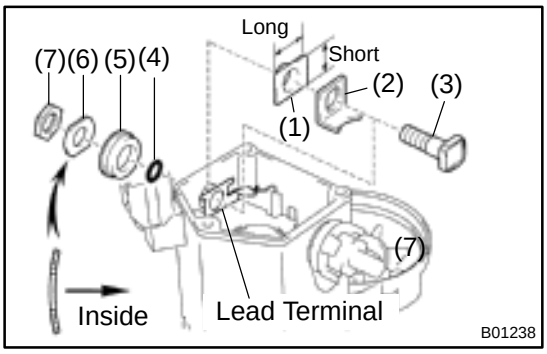

(e) Temporarily install these new terminal C kit parts:
(1) Terminal insulator (inside)
(2) Contact plate
(3) Terminal bolt
(4) O–ring
(5) Terminal insulator (outside)
(6) Wave washer
(7) Terminal nut

NOTICE:
Be careful to install the terminal insulators (inside) and wave washers in the correct direction.

(f) Temporarily tighten the terminal nuts.

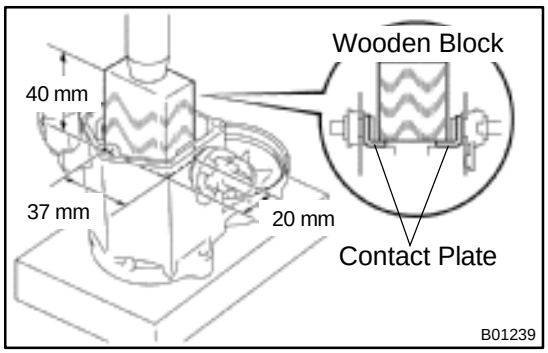

(g) Tighten terminal nuts.
(1) Put a wooden block on the contact plate and press it down with a hand press.

Dimensions of wooden block:
20 x 37 x 40 mm (0.79 x 1.46 x 1.57 in.)
Press force:
981 N (100 kgf, 221 lbf)

NOTICE:

- **Check the diameter of the hand press ram. Then calculate the gauge pressure of the press when 981 N (100 kgf, 221 lbf) of force is applied.**

Gauge pressure:

$$(kgf/cm^2) = \frac{100\ kgf}{\left(\frac{Ram\ diameter\ (cm)}{2}\right)^2 \times 3.14\ (\pi)}$$

$$(psi) = \frac{221\ lbf}{\left(\frac{Ram\ diameter\ (in.)}{2}\right)^2 \times 3.14\ (\pi)}$$

$$(kPa) = (kgf/cm^2) \times 98.1$$

$$(kPa) = (psi) \times 6.9$$

◆ **If the contact plate is not pressed down with the specified pressure, the contact plate may tilt due to coil deformation or the tightening of the nut.**

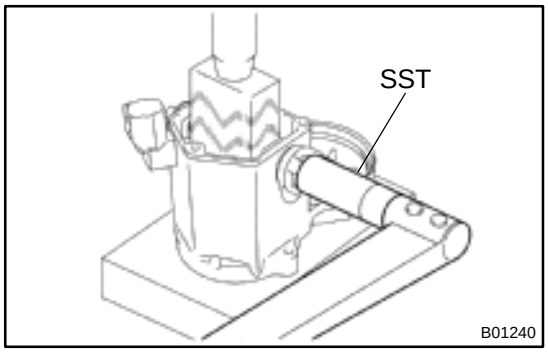

(2) Using SST, tighten the nuts to the specified torque.
SST 09810–38140
Torque: 17 N·m (173 kgf·cm, 13 ft·lbf)

NOTICE:
If the nut is over tightened, it may cause cracks on the inside of the insulator.

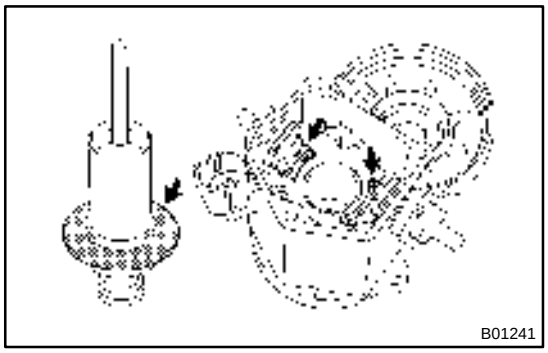

(h) Clean the contact surfaces of the remaining contact plate and plunger with a dry shop rag.

(i) Reinstall the plunger, a new gasket and the end cover with the 3 bolts.
Torque: 2.5 N·m (26 kgf·cm, 23 in.·lbf)

ST03N–02

REASSEMBLY

Reassembly is in the reverse order of disassembly. (See page ST–6)

HINT:

Use high–temperature grease to lubricate the bearings, springs, steel ball and gears when assembling the starter.

ST03O–01

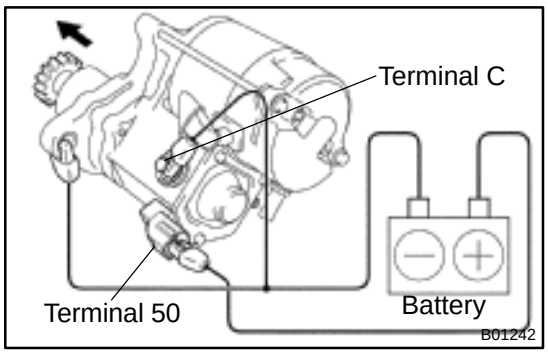

TEST

NOTICE:

These tests must be done within 3 to 5 seconds to avoid burning out the coil.

1. DO PULL–IN TEST

(a) Disconnect the field coil lead wire from terminal C.

(b) Connect the battery to the magnetic switch as shown. Check that the clutch pinion gear moves outward.

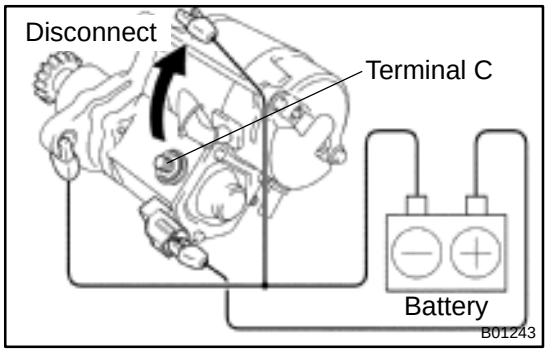

2. DO HOLD–IN TEST

With battery connected as above with the clutch pinion gear out, disconnect the negative (–) lead from terminal C. Check that the pinion gear remains out.

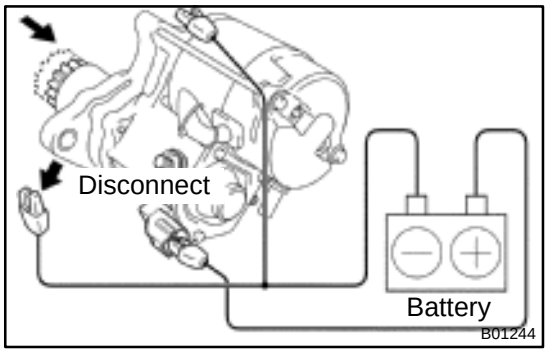

3. INSPECT CLUTCH PINION GEAR RETURN

Disconnect the negative (–) lead from the switch body. Check that the clutch pinion gear returns inward.

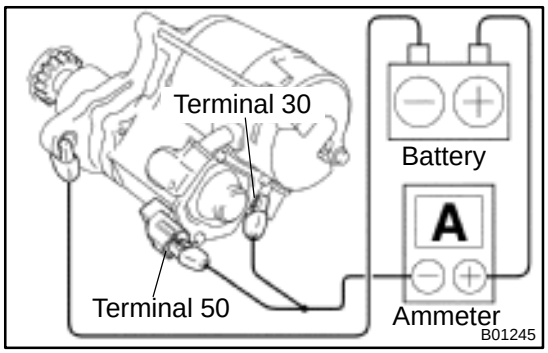

4. DO NO–LOAD PERFORMANCE TEST

(a) Connect the battery and ammeter to the starter as shown.

(b) Check that the starter rotates smoothly and steadily with the pinion gear moving out. Check that the ammeter shows the specified current.

Specified current: 90 A or less at 11.5 V

ST03P–01

INSTALLATION

Installation is in the reverse order of removal. (See page ST–5)

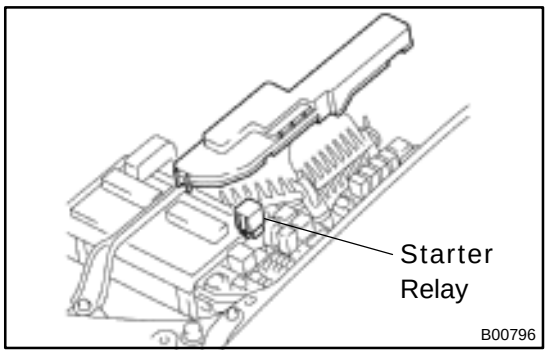

STARTER RELAY

ST03Q–01

INSPECTION

1. REMOVE RELAY BOX COVER

2. REMOVE STARTER RELAY (Marking: ST)

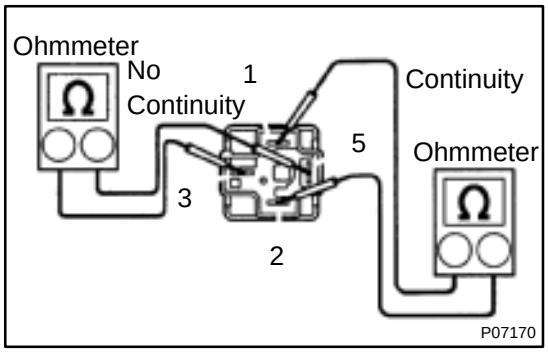

3. INSPECT STARTER RELAY

(a) Inspect the relay continuity.

(1) Using an ohmmeter, check that there is continuity between terminals 1 and 2.

If there is no continuity, replace the relay.

(2) Check that there is no continuity between terminals 3 and 5.

If there is continuity, replace the relay.

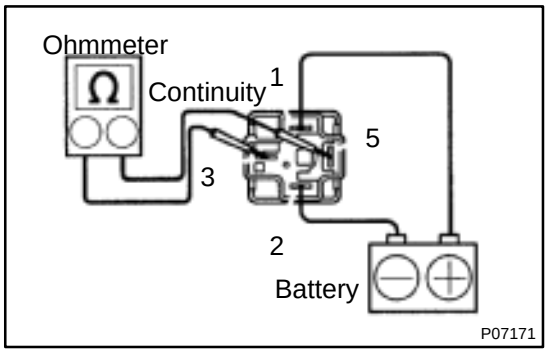

(b) Inspect the relay operation.

(1) Apply battery positive voltage across terminals 1 and 2.

(2) Using an ohmmeter, check that there is continuity between terminals 3 and 5.

If there is no continuity, replace the relay.

4. REINSTALL STARTER RELAY

5. REINSTALL RELAY BOX COVER

STARTING SYSTEM

ST01T–01

ON–VEHICLE INSPECTION

NOTICE:

Before changing the starter, check the following items again:

- **Connector connection**
- **Accessory installation, e.g.: theft deterrent system**

STARTER

COMPONENTS

ST01U–04

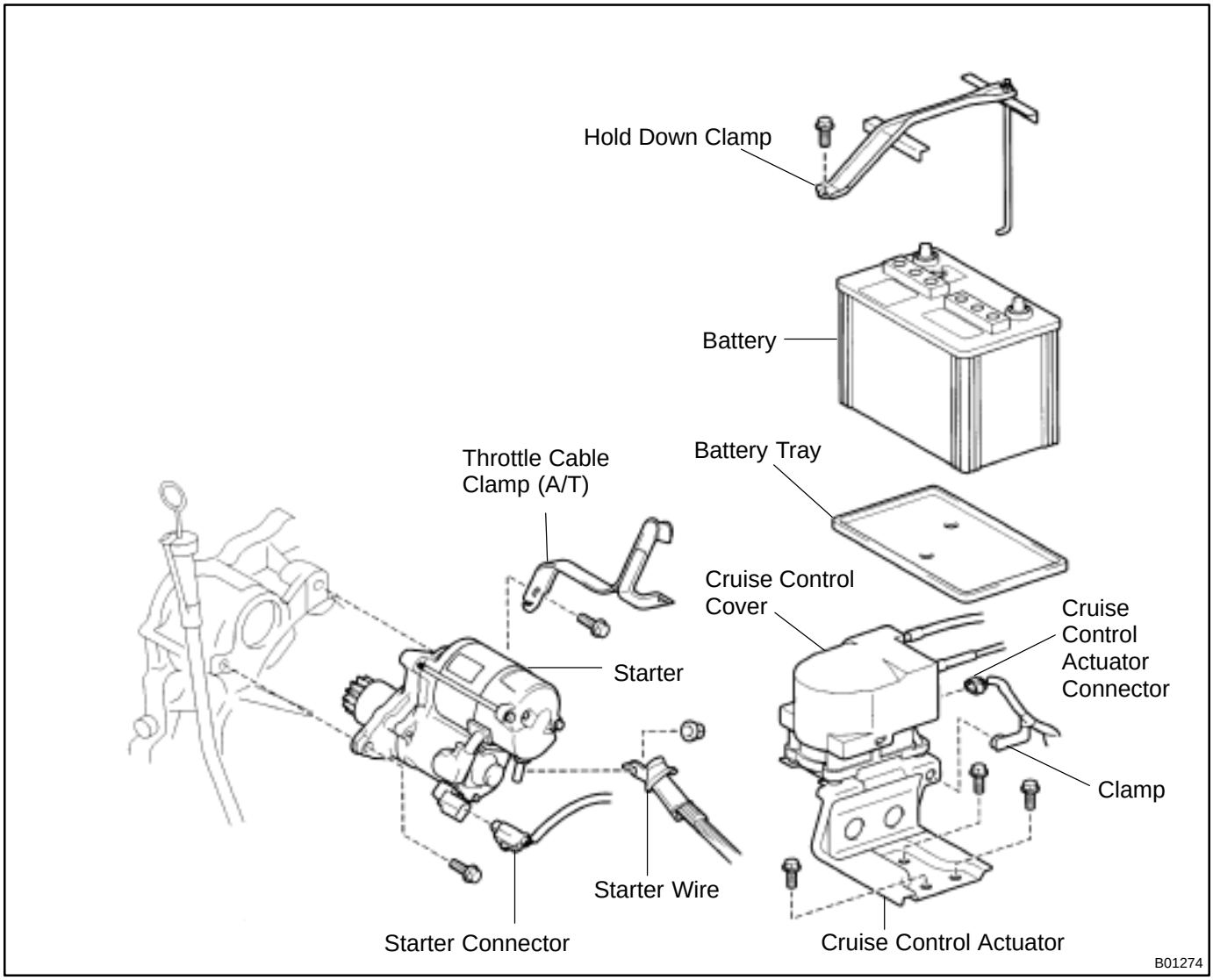

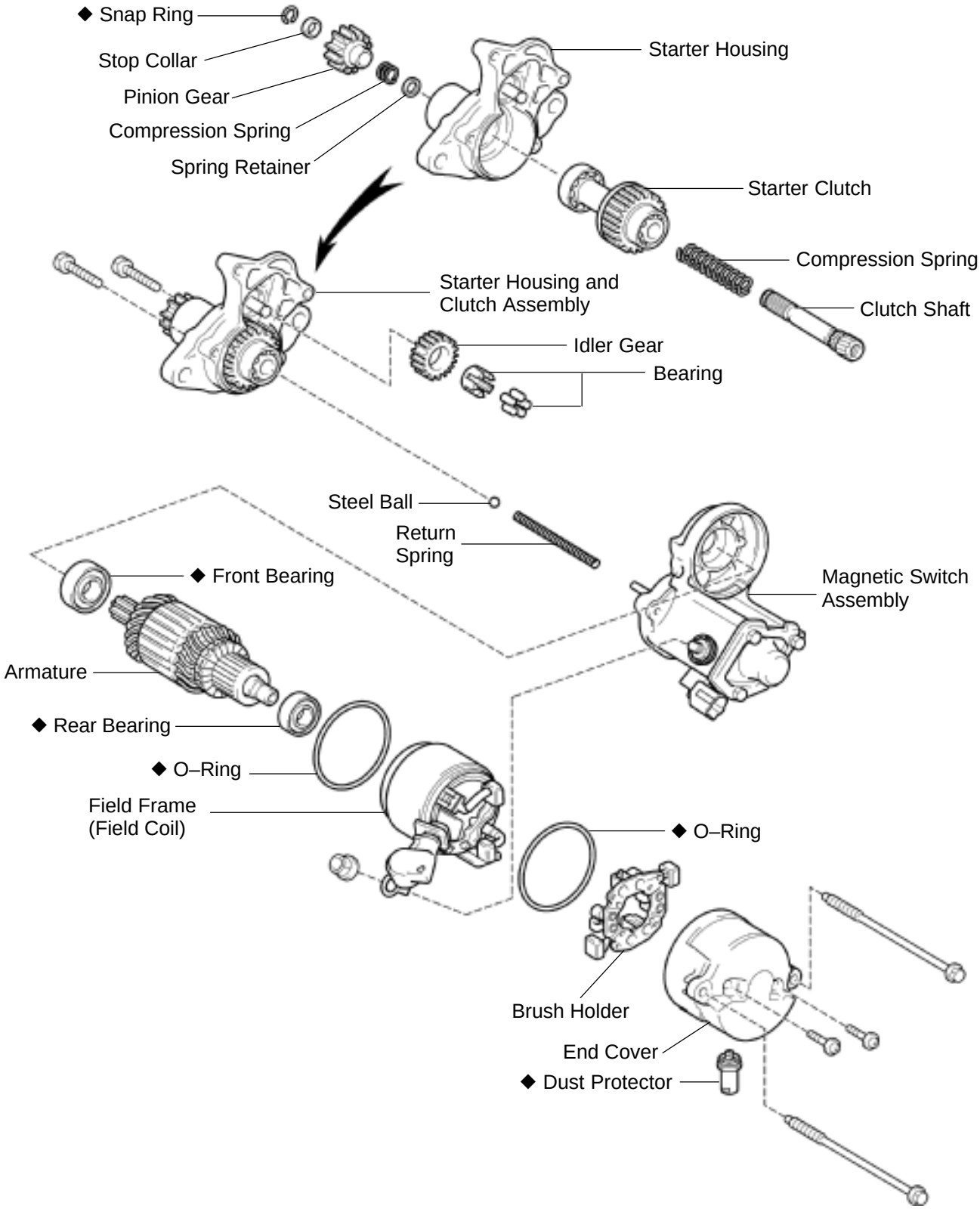

◆ Non–reusable part

B01154

Magnetic Switch Assembly

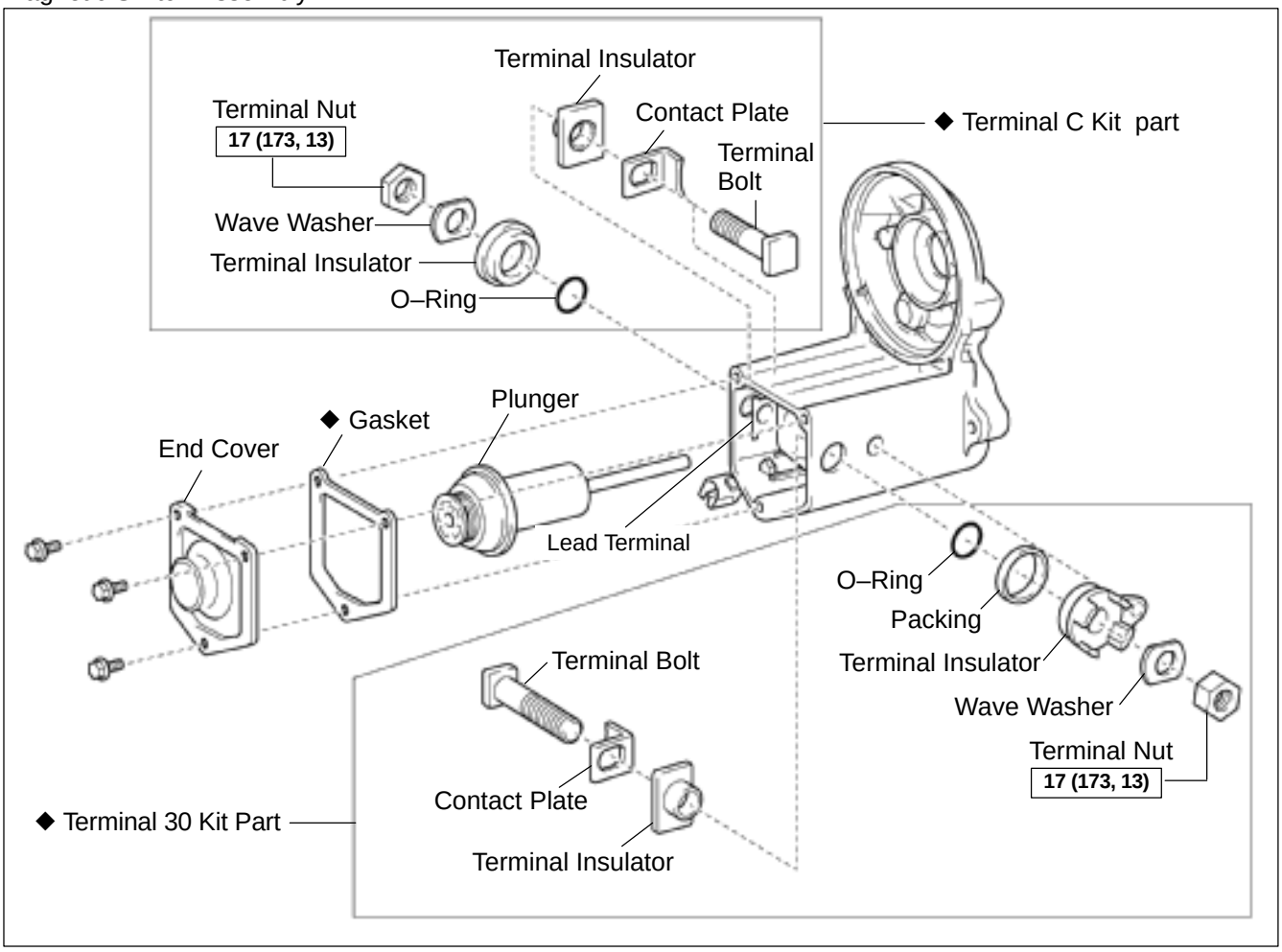

N·m (kgf·cm, ft·lbf): Specified torque
◆ Non–reusable part

B06418

ST01V–03

REMOVAL

1. REMOVE BATTERY AND TRAY

2. w/ CRUISE CONTROL SYSTEM:
REMOVE CRUISE CONTROL ACTUATOR

(a) Disconnect the actuator connector and clamp.

(b) Remove the 3 bolts, and disconnect the actuator with the bracket.

3. REMOVE STARTER

(a) Disconnect the starter connector.

(b) Remove the 2 bolts, throttle cable clamp (A/T) and starter.

(c) Remove the nut, and disconnect the starter wire.
Torque: 37 N·m (380 kgf·cm, 27 ft·lbf)

ST01W–01

DISASSEMBLY

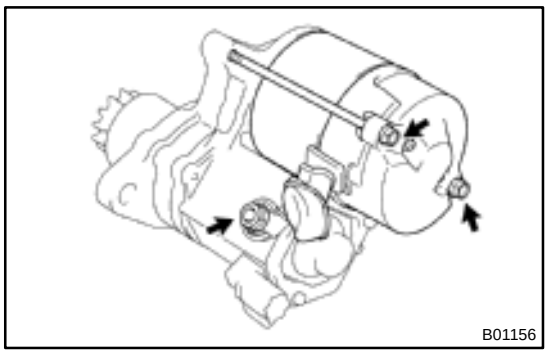

1. REMOVE DUST PROTECTOR

2. REMOVE FIELD FRAME AND ARMATURE

(a) Remove the nut, and disconnect the lead wire from the magnetic switch terminal.
Torque: 5.9 N·m (60 kgf·cm, 52 in.·lbf)

(b) Remove the 2 through bolts.
Torque: 5.9 N·m (60 kgf·cm, 52 in.·lbf)

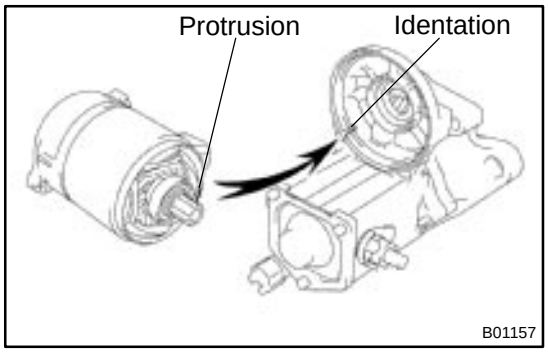

(c) Pull out the field frame together with the armature.

HINT:

Align the protrusion of the field frame with the groove of the magnetic switch.

(d) Remove the O–ring from the field frame.

HINT:

At the time of installation, please refer to the following items. Use a new O–ring.

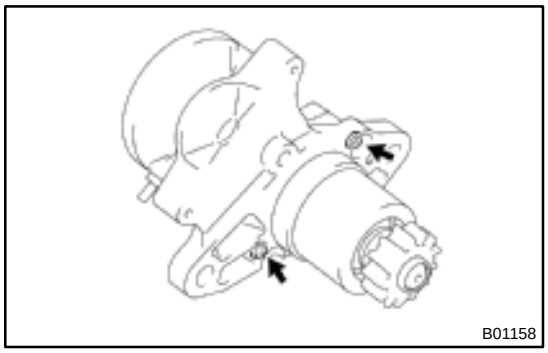

3. REMOVE STARTER HOUSING, CLUTCH ASSEMBLY AND GEAR

(a) Remove the 2 screws.
Torque: 5.9 N·m (60 kgf·cm, 52 in.·lbf)

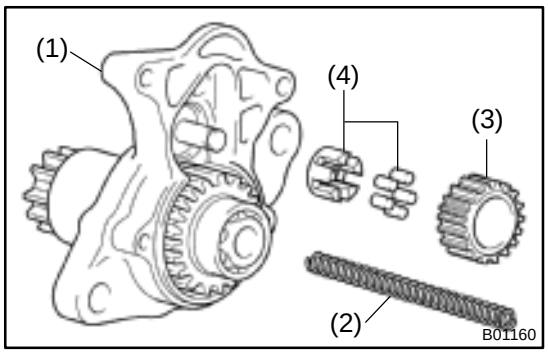

(b) Remove these parts from the magnetic switch:
(1) Starter housing and clutch assembly
(2) Return spring
(3) Idler gear
(4) Bearing

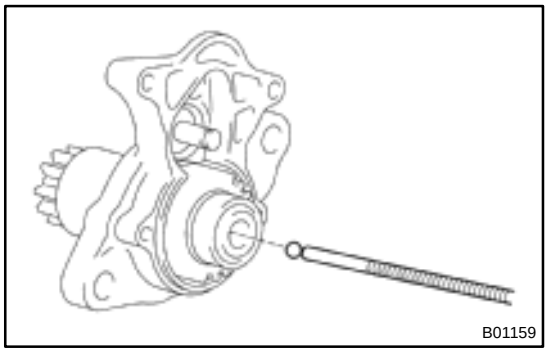

4. REMOVE STEEL BALL

Using a magnetic finger, remove the steel ball from the clutch shaft hole.

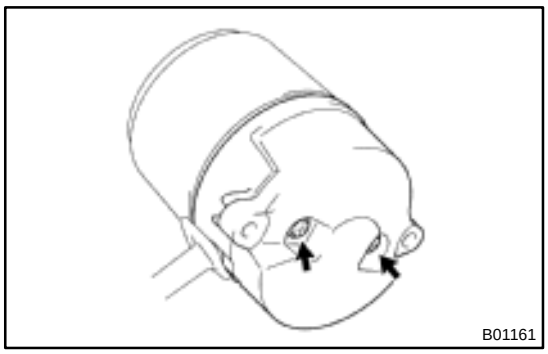

5. REMOVE BRUSH HOLDER

(a) Remove the 2 screws and end cover from the field frame.
Torque: 1.5 N·m (15 kgf·cm, 13 in.·lbf)

(b) Remove the O–ring from the field frame.

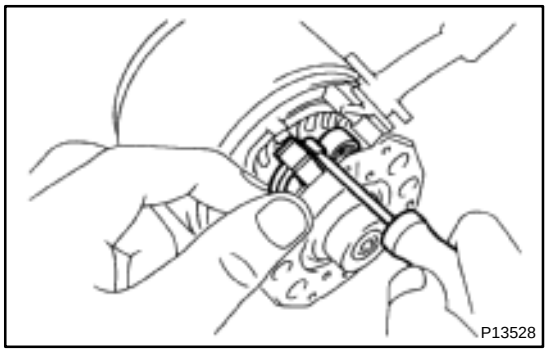

(c) Using a screwdriver, hold the spring back and disconnect the brush from the brush holder. Disconnect the 4 brushes, and remove the brush holder.

NOTICE:

Check that the positive (+) lead wires are not grounded.

6. REMOVE ARMATURE FROM FIELD FRAME

ST01X–03

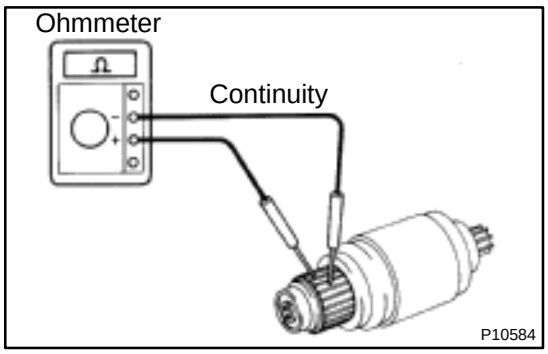

INSPECTION

1. INSPECT ARMATURE COIL

(a) Check the commutator for open circuit.
Using an ohmmeter, check that there is continuity between the segments of the commutator.

If there is no continuity between any segment, replace the armature.

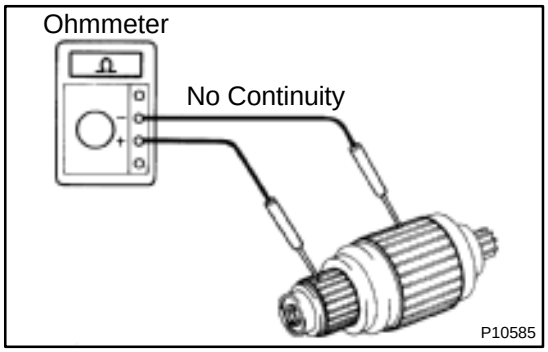

(b) Check the commutator for ground.
Using an ohmmeter, check that there is no continuity between the commutator and armature coil core.

If there is continuity, replace the armature.

2. INSPECT COMMUTATOR

(a) Check the commutator for the dirty and burnt surfaces.

If the surface is dirty or burnt, correct it with sandpaper (No.400) or on a lathe.

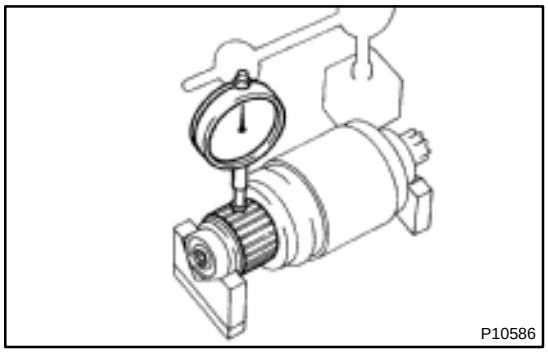

(b) Check for the commutator circle runout.
(1) Place the commutator on V–blocks.
(2) Using a dial gauge, measure the circle runout.
Maximum circle runout: 0.05 mm (0.0020 in.)

If the circle runout is greater than maximum, correct it on a lathe.

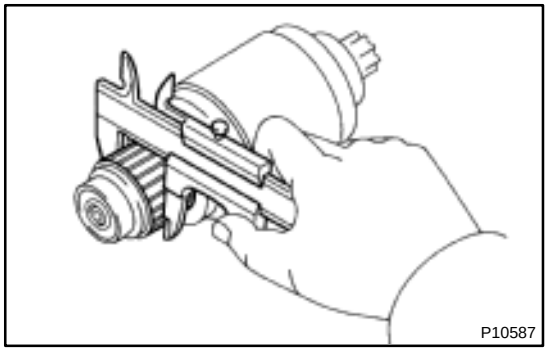

(c) Using vernier calipers, measure the commutator diameter.
Standard diameter: 30.0 mm (1.181 in.)
Minimum diameter: 29.0 mm (1.142 in.)

If the diameter is less than minimum, replace the armature.

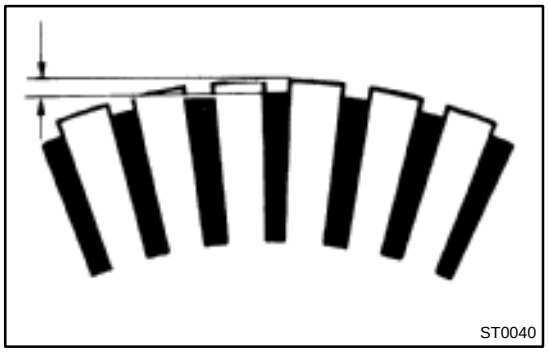

(d) Check that the undercut depth is clean and free of foreign materials. Smooth out the edge.
Standard undercut depth: 0.6 mm (0.024 in.)
Minimum undercut depth: 0.2 mm (0.008 in.)

If the undercut depth is less than minimum, correct it with a hacksaw blade.

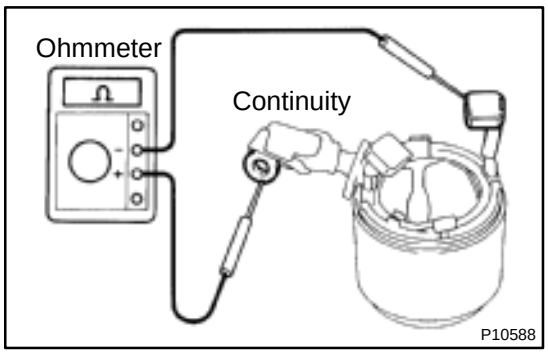

3. INSPECT FIELD COIL

(a) Check the field coil for open circuit.

Using an ohmmeter, check that there is continuity between the lead wire and field coil brush lead.

If there is no continuity, replace the field frame.

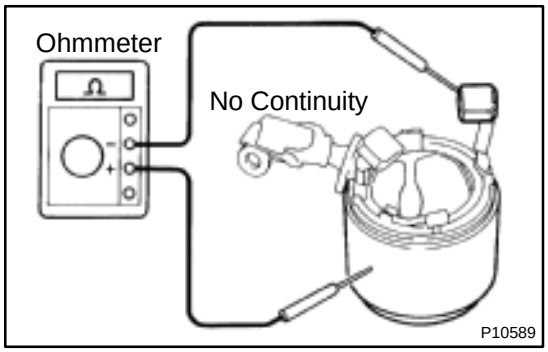

(b) Check the field coil for ground.

Using an ohmmeter, check that there is no continuity between the field coil end and field frame.

If there is continuity, repair or replace the field frame.

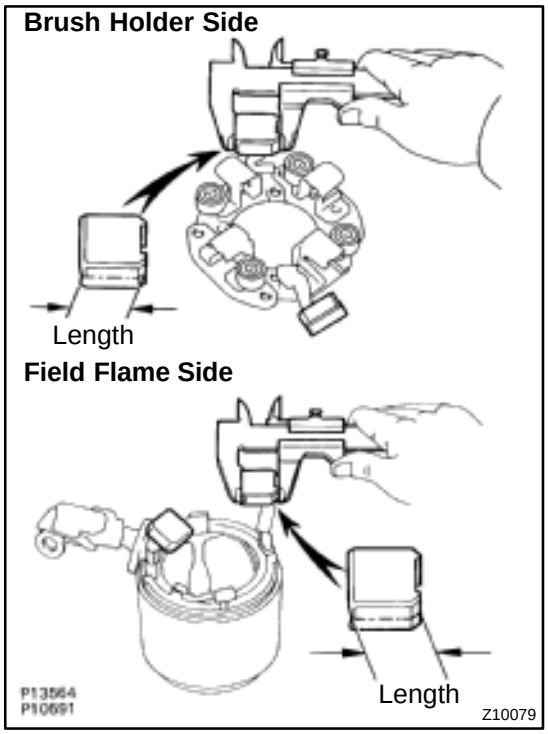

4. INSPECT BRUSHES

Using vernier calipers, measure the brush length.

Standard length: 15.5 mm (0.610 in.)

Minimum length: 10.0 mm (0.394 in.)

If the length is less than minimum, replace the brush holder and field frame.

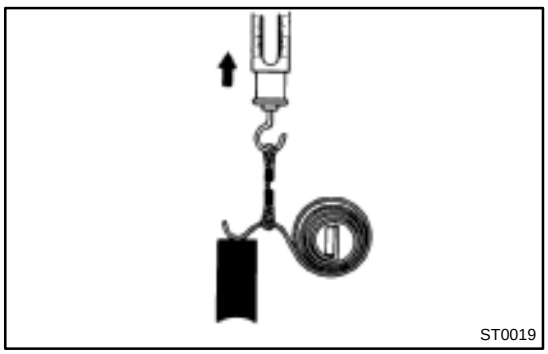

5. INSPECT BRUSH SPRINGS

Check the brush spring load.

Take the pull scale reading the instant the brush spring separates from the brush.

Standard spring installed load:

1.2 kW	13.7 – 19.6 N (1.4 – 2.0 kgf, 3.0 – 4.4 lbf)
1.4 kW	17.6 – 23.5 N (1.8 – 2.4 kgf, 3.9 – 5.3 lbf)

Minimum spring installed load:

1.2 kW	9.8 N (1.0 kgf, 2.2 lbf)
1.4 kW	11.8 N (1.2 kgf, 2.6 lbf)

If the installed load is less than minimum, replace the brush springs.

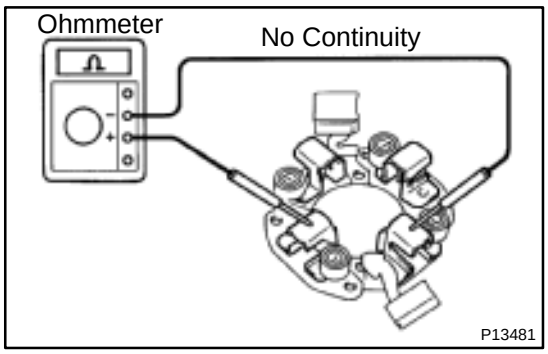

6. INSPECT BRUSH HOLDER

Check the brush holder insulation.

Using an ohmmeter, check that there is no continuity between the positive (+) and negative (–) brush holders.

If there is continuity, repair or replace the brush holder.

7. INSPECT CLUTCH AND GEAR

(a) Check the gear teeth on the pinion gear, idler gear and clutch assembly for wear or damage.

If damaged, replace the gear or clutch assembly.

If damaged, also check the ring gear of the flywheel/drive plate for wear or damage.

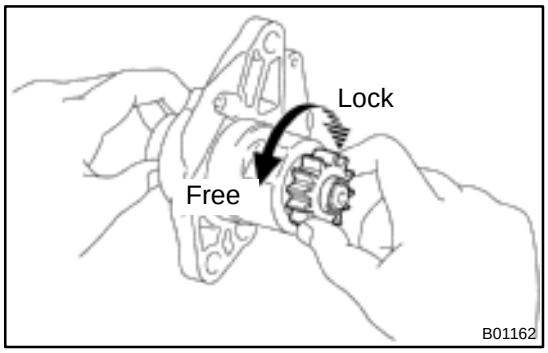

(b) Check the clutch pinion gear.

Hold the starter clutch and rotate the pinion gear counterclockwise, and check that it turns freely. Try to rotate the pinion gear clockwise and check that it locks.

If necessary, replace the clutch assembly.

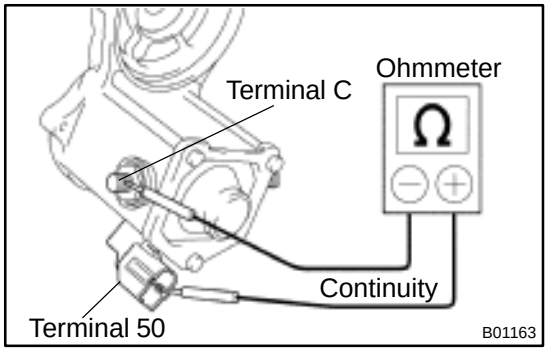

8. INSPECT MAGNETIC SWITCH

(a) Check the pull–in coil for open circuit.

Using an ohmmeter, check that there is continuity between terminals 50 and C.

If there is no continuity, check and replace the magnetic switch.

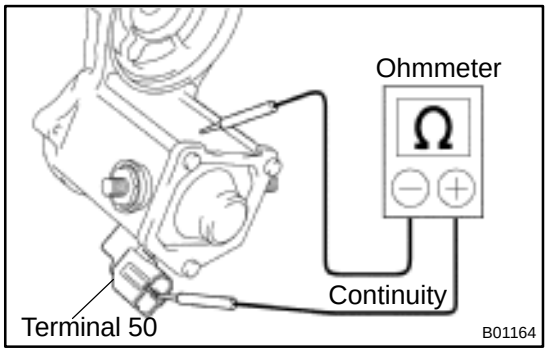

(b) Check the hold–in coil for open circuit.

Using an ohmmeter, check that there is continuity between terminal 50 and the switch body.

If there is no continuity, replace the magnetic switch.

9. INSPECT BEARING

Turn the bearing by hand while applying inward force.

If resistance is felt or the bearing sticks, replace the bearing.

(See page ST–11)

ST01Y–03

REPLACEMENT

1. REPLACE CLUTCH ASSEMBLY

(a) Disassemble the starter housing and the clutch assembly.

(1) Mount a brass bar in a vise, and install the starter housing and clutch assembly to the brass bar.

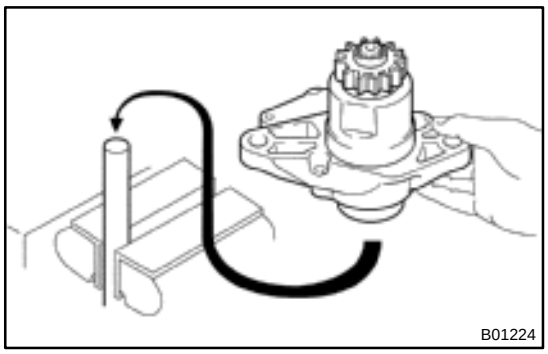

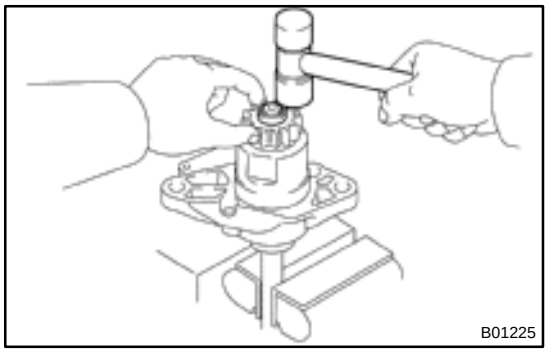

(2) Push down the pinion gear.

(3) Using a plastic–faced hammer, tap down the stop collar.

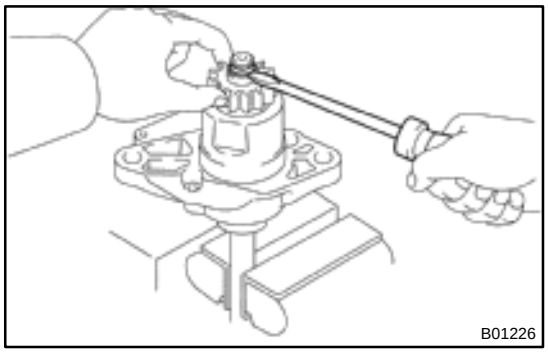

(4) Using a screwdriver, pry out the snap ring.

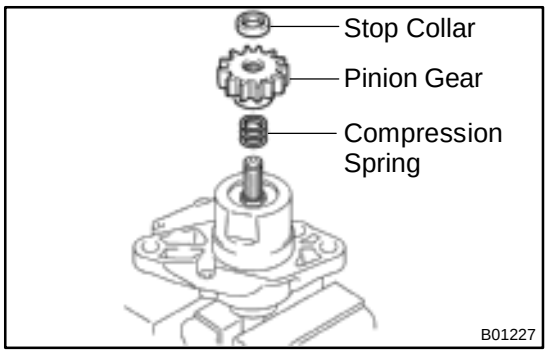

(5) Remove these parts:

- Stop collar
- Pinion gear
- Compression spring

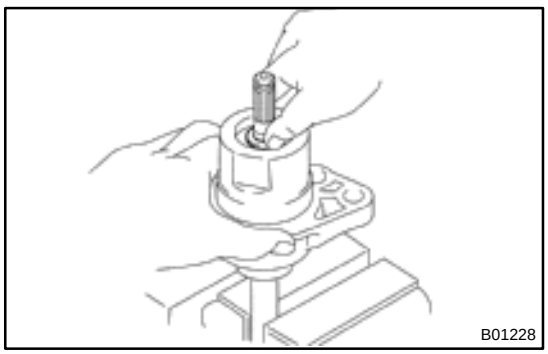

(6) Push down the starter housing, and remove the spring retainer.

(7) Disassemble these parts:

- Starter housing
- Starter clutch
- Compression spring
- Clutch shaft

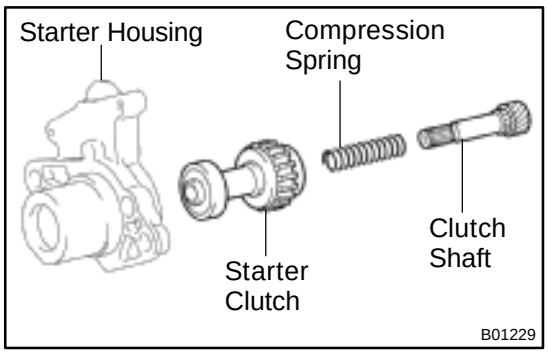

(b) Assemble the starter housing and the clutch assembly
(1) Assemble these parts:
- Starter housing
- Starter clutch
- Compression spring
- Clutch shaft

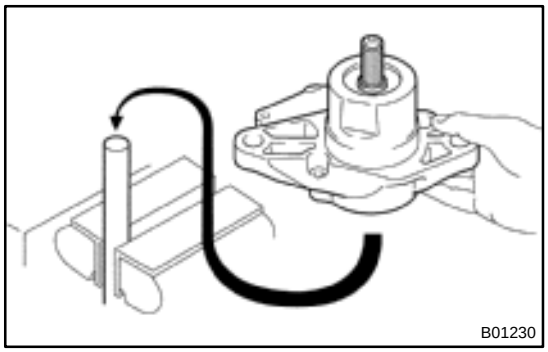

(2) Mount a brass bar in a vise, install the starter housing and clutch assembly to the brass bar.

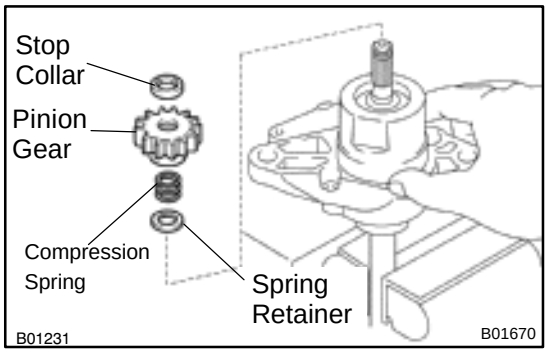

(3) Push down the starter housing, and install these parts:
- Spring retainer
- Compression spring
- Pinion gear
- Stop collar

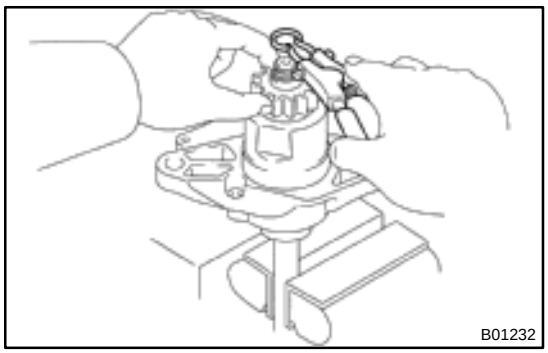

(4) Push down the pinion gear.
(5) Using snap ring pliers, install a new snap ring.

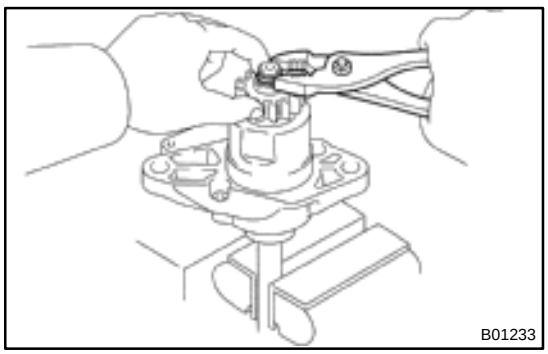

(6) Using pliers, compress the snap ring.
(7) Check that the snap ring fits correctly.

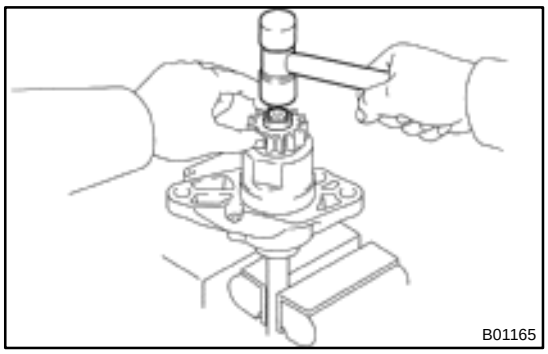

(8) Remove the starter housing and clutch assembly from the brass bar.
(9) Using a plastic–faced hammer, tap the clutch shaft and install the stop collar onto the snap ring.

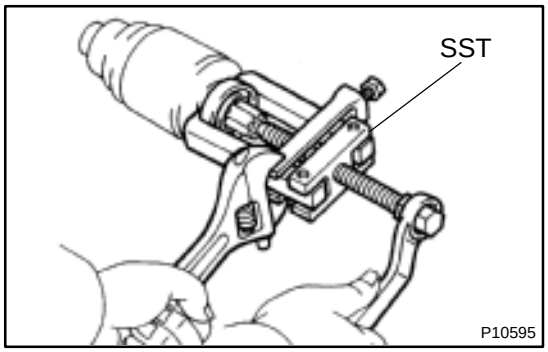

2. REPLACE FRONT BEARING

(a) Using SST, remove the bearing.
SST 09286–46011

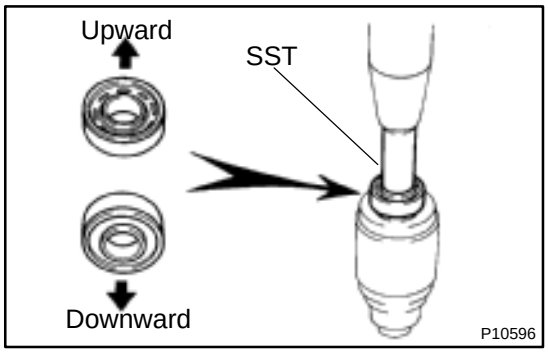

(b) Using SST and a press, press in a new bearing.

NOTICE:

Be careful of the bearing installation direction.

SST 09820–00030

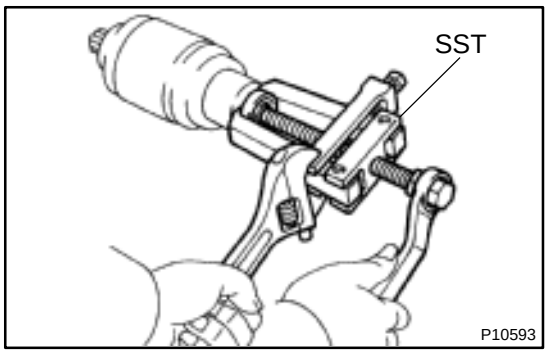

3. REPLACE REAR BEARING

(a) Using SST, remove the bearing.
SST 09286–46011

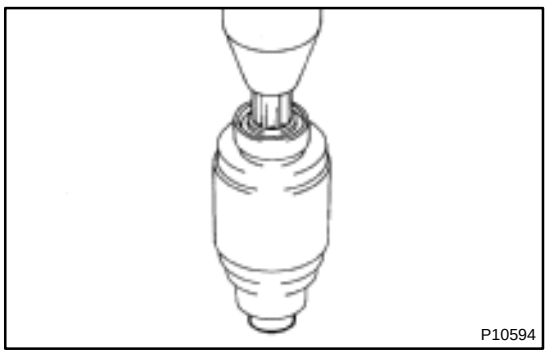

(b) Using a press, press in a new bearing.

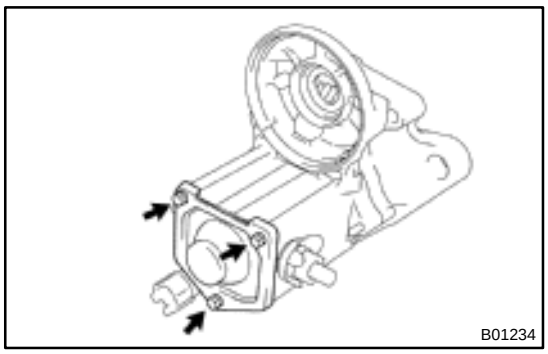

4. REPLACE MAGNETIC SWITCH TERMINAL KIT PARTS

(a) Remove the 3 bolts, end cover, gasket and the plunger.

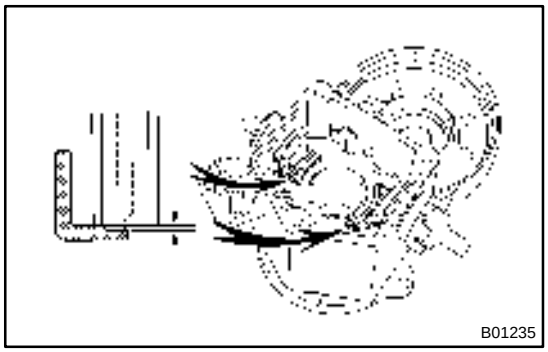

(b) Using vernier calipers, measure the contact plate for depth of wear.

Maximum wear: 0.9 mm (0.035 in.)

If the depth of wear is greater than the maximum, replace the contact plate.

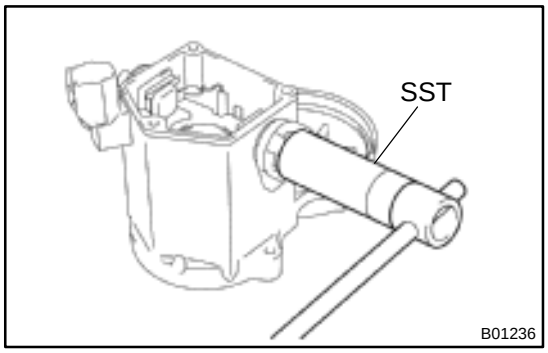

(c) Remove the terminal kit parts.

(1) Using SST, loosen the terminal nuts.

SST 09810–38140

(2) Terminal C:
Remove the terminal nut, wave washer, terminal insulator (outside), O–ring, terminal bolt, contact plate and terminal insulator (inside).

(3) Terminal 30:
Remove the terminal nut, wave washer, terminal insulator (outside), packing, O–ring, terminal bolt, contact plate, terminal insulator (inside).

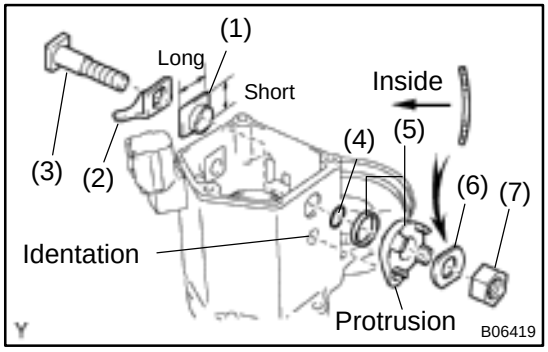

(d) Temporarily install these new terminal 30 kit parts:

(1) Terminal insulator (inside)
(2) Contact plate
(3) Terminal bolt
(4) O–ring
(5) Packing and terminal insulator (outside)
Install the packing to the terminal insulator, and install them.

HINT:
Match the protrusion of the insulator with the indentation of the housing.

(6) Wave washer
(7) Terminal nut

NOTICE:
Be careful to install the terminal insulators (inside) and wave washers in the correct direction.

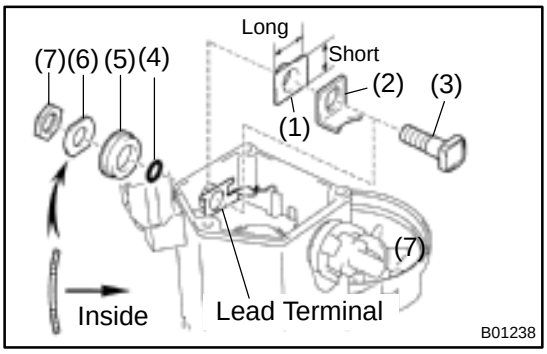

(e) Temporarily install these new terminal C kit parts:
(1) Terminal insulator (inside)
(2) Contact plate
(3) Terminal bolt
(4) O–ring
(5) Terminal insulator (outside)
(6) Wave washer
(7) Terminal nut

NOTICE:
Be careful to install the terminal insulators (inside) and wave washers in the correct direction.

(f) Temporarily tighten the terminal nuts.

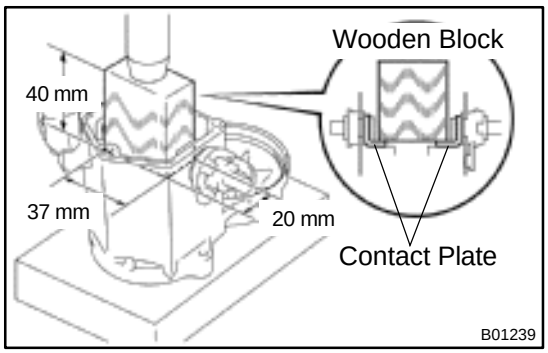

(g) Tighten terminal nuts.
(1) Put a wooden block on the contact plate and press it down with a hand press.

Dimensions of wooden block:
20 x 37 x 40 mm (0.79 x 1.46 x 1.57 in.)
Press force:
981 N (100 kgf, 221 lbf)

NOTICE:

- **Check the diameter of the hand press ram. Then calculate the gauge pressure of the press when 981 N (100 kgf, 221 lbf) of force is applied.**

Gauge pressure:

$$(\text{kgf/cm}^2) = \frac{100\ \text{kgf}}{\left(\frac{\text{Ram diameter (cm)}}{2}\right)^2 \times 3.14\ (\pi)}$$

$$(\text{psi}) = \frac{221\ \text{lbf}}{\left(\frac{\text{Ram diameter (in.)}}{2}\right)^2 \times 3.14\ (\pi)}$$

$$(\text{kPa}) = (\text{kgf/cm}^2) \times 98.1$$

$$(\text{kPa}) = (\text{psi}) \times 6.9$$

◆ **If the contact plate is not pressed down with the specified pressure, the contact plate may tilt due to coil deformation or the tightening of the nut.**

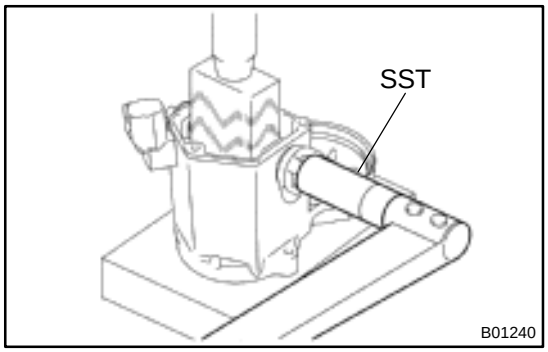

(2) Using SST, tighten the nuts to the specified torque.
SST 09810–38140
Torque: 17 N·m (173 kgf·cm, 13 ft·lbf)

NOTICE:
If the nut is over tightened, it may cause cracks on the inside of the insulator.

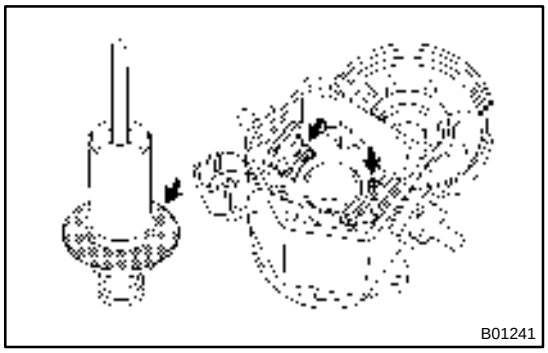

(h) Clean the contact surfaces of the remaining contact plate and plunger with a dry shop rag.

(i) Reinstall the plunger, new gasket and end cover with the 3 bolts.
Torque: 2.5 N·m (26 kgf·cm, 23 in.·lbf)

ST01Z–01

REASSEMBLY

Reassembly is in the reverse order of disassembly. (See page ST–6)

HINT:

Use high–temperature grease to lubricate the bearings, springs, steel ball and gears when assembling the starter.

ST020–01

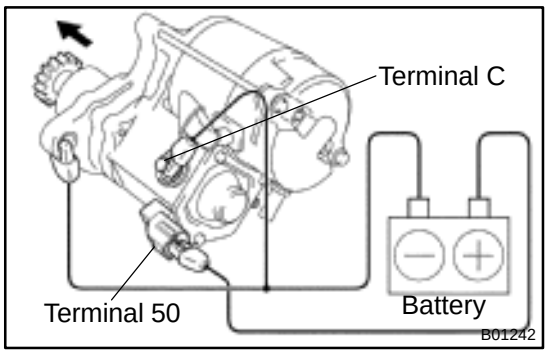

TEST

NOTICE:

These tests must be done within 3 to 5 seconds to avoid burning out the coil.

1. DO PULL–IN TEST

(a) Disconnect the field coil lead wire from terminal C.

(b) Connect the battery to the magnetic switch as shown. Check that the clutch pinion gear moves outward.

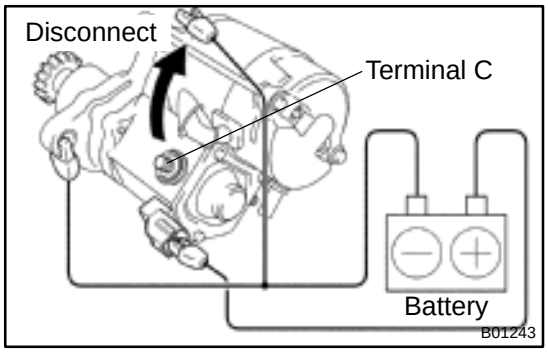

2. DO HOLD–IN TEST

With battery connected as above with the clutch pinion gear out, disconnect the negative (–) lead from terminal C. Check that the pinion gear remains out.

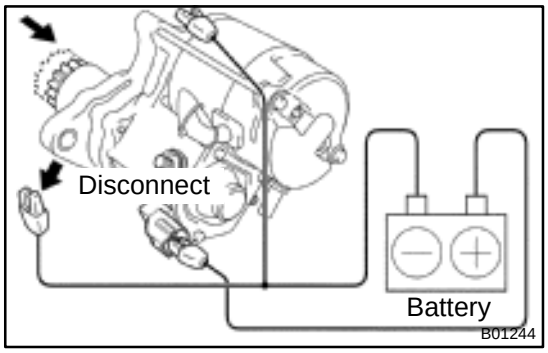

3. INSPECT CLUTCH PINION GEAR RETURN

(a) Disconnect the negative (–) lead from the switch body.

(b) Check that the clutch pinion gear returns inward.

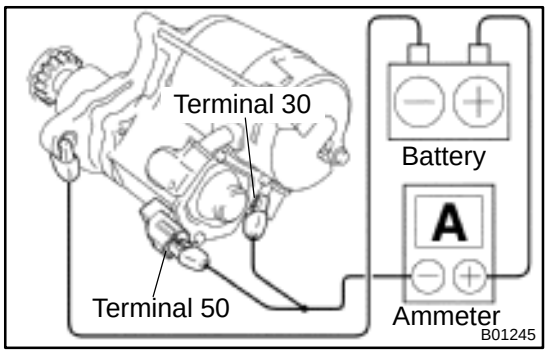

4. DO NO–LOAD PERFORMANCE TEST

(a) Connect the battery and ammeter to the starter as shown.

(b) Check that the starter rotates smoothly and steadily with the pinion gear moving out. Check that the ammeter shows the specified current.

Specified current: 90 A or less at 11.5 V

ST021–01

INSTALLATION

Installation is in the reverse order of removal. (See page ST–5)

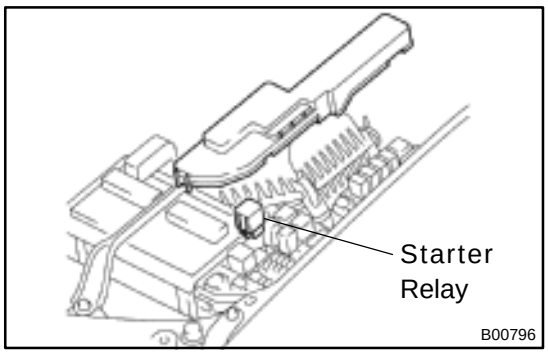

STARTER RELAY

ST022–01

INSPECTION

1. REMOVE RELAY BOX COVER

2. REMOVE STARTER RELAY (Marking: ST)

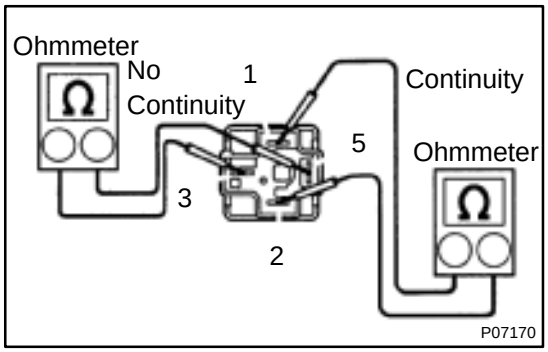

3. INSPECT STARTER RELAY

(a) Inspect the relay continuity.

(1) Using an ohmmeter, check that there is continuity between terminals 1 and 2.

If there is no continuity, replace the relay.

(2) Check that there is no continuity between terminals 3 and 5.

If there is continuity, replace the relay.

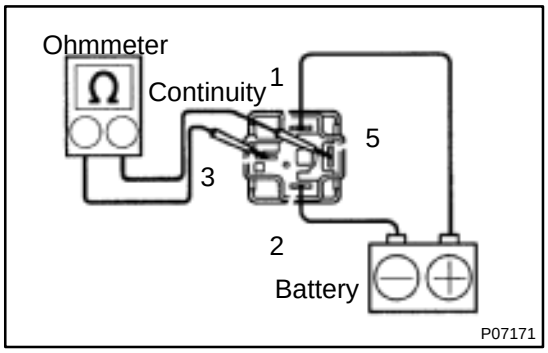

(b) Inspect the relay operation.

(1) Apply battery positive voltage across terminals 1 and 2.

(2) Using an ohmmeter, check that there is continuity between terminals 3 and 5.

If there is no continuity, replace the relay.

4. REINSTALL STARTER RELAY

5. REINSTALL RELAY BOX COVER

STEERING SYSTEM

SR06B–01

PRECAUTION

★ **Care must be taken to replace parts properly because they could affect the performance of the steering system and result in a driving hazard.**

★ **The CAMRY is equipped with SRS (Supplemental Restraint System) such as the driver airbag and front passenger airbag. Failure to carry out service operation in the correct sequence could cause the SRS to unexpectedly deployed during servicing, possibly leading to a serious accident. Before servicing (including removal or installation of parts, inspection or replacement), be sure to read the precautionary notices in the RS section.**

TROUBLESHOOTING

SR06C–01

PROBLEM SYMPTOMS TABLE

Use the table below to help you find the cause of the problem. The numbers indicate the priority of the likely cause of the problem. Check each part in the order shown. If necessary, repair or replace these parts.

Symptom	Suspect Area	See page
Hard steering	1. Tires (Improperly inflated)	SA–2
	2. Power steering fluid level (Low)	SR–5
	3. Drive belt (Loose)	SR–3
	4. Front wheel alignment (Incorrect)	SA–4
	5. Steering system joints (Worn)	–
	6. Suspension arm ball joints (Worn)	SA–45
	7. Steering column (Binding)	–
	8. Power steering vane pump	SR–18
	9. Power steering gear	SR–31
Poor return	1. Tires (Improperly inflated)	SA–2
	2. Front wheel alignment (Incorrect)	SA–4
	3. Steering column (Binding)	–
	4. Power steering gear	SR–31
Excessive play	1. Steering system joints (Worn)	–
	2. Suspension arm ball joints (Worn)	SA–45
	3. Intermediate shaft, Sliding yoke (Worn)	–
	4. Front wheel bearing (Worn)	SA–10
	5. Power steering gear	SR–31
Abnormal noise	1. Power steering fluid level (Low)	SR–5
	2. Steering system joints (Worn)	–
	3. Power steering vane pump	SR–18
	4. Power steering gear	SR–31

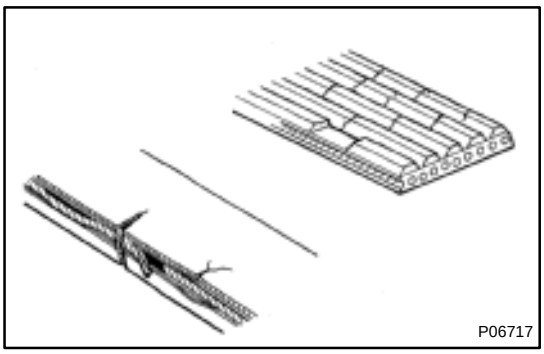
P06717

DRIVE BELT

SR06D–01

INSPECTION

INSPECT DRIVE BELT

(a) Visually check the belt for excessive wear, frayed cords etc.

If any defect has been found, replace the drive belt.

HINT:

Cracks on the rib side of a belt are considered acceptable. If the belt has chunks missing from the ribs, it should be replaced.

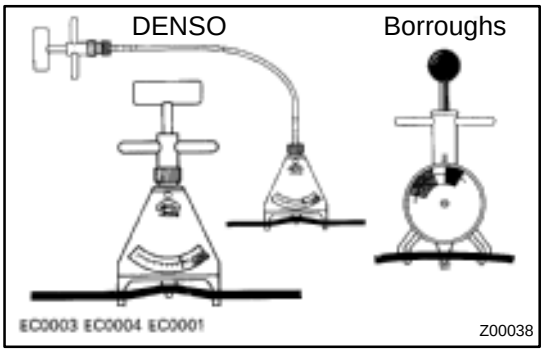

(b) Using a belt tension gauge, measure the belt tension.
Belt tension gauge:
DENSO BTG–20 (95506–00020)
Borroughs No. BT–33–73F
5S–FE Engine:
Drive belt tension:
New belt: 95 – 145 lbf
Used belt: 60 – 100 lbf
1MZ–FE Engine:
Drive belt tension:
New belt: 150 – 185 lbf
Used belt: 95 – 135 lbf

If the belt tension is not as specified, adjust it.

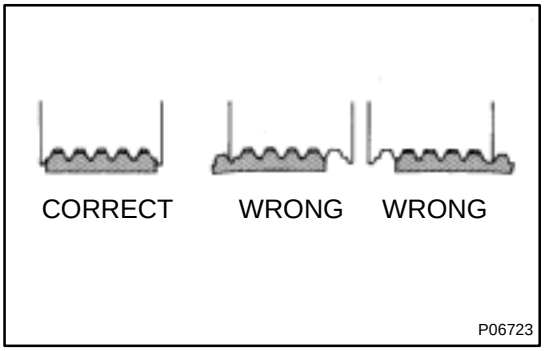

HINT:

- ★ ”New belt” refers to a belt which has been used less than 5 minutes on a running engine.
- ★ ”Used belt” refers to a belt which has been used on a running engine for 5 minutes or more.
- ★ After installing a belt, check that it fits properly in the ribbed grooves.
- ★ Check with your hand to confirm that the belt has not slipped out of the groove on the bottom of the pulley.
- ★ After installing a new belt, run the engine for about 5 minutes and recheck the belt tension.

POWER STEERING FLUID

SR06E–01

BLEEDING

1. CHECK FLUID LEVEL
(See page SR–5)

2. JACK UP FRONT OF VEHICLE AND SUPPORT IT WITH STANDS

3. TURN STEERING WHEEL

With the engine stopped, turn the wheel slowly from lock to lock several times.

4. LOWER VEHICLE

5. START ENGINE

Run the engine at idle for a few minutes.

6. TURN STEERING WHEEL

(a) With the engine idling, turn the wheel to left or right full lock and keep it there for 2–3 seconds, then turn the wheel to the opposite full lock and keep it there for 2–3 seconds.

(b) Repeat (a) several times.

7. STOP ENGINE

8. CHECK FOR FOAMING OR EMULSIFICATION

If the system has to be bled twice specifically because of foaming or emulsification, check for fluid leaks in the system.

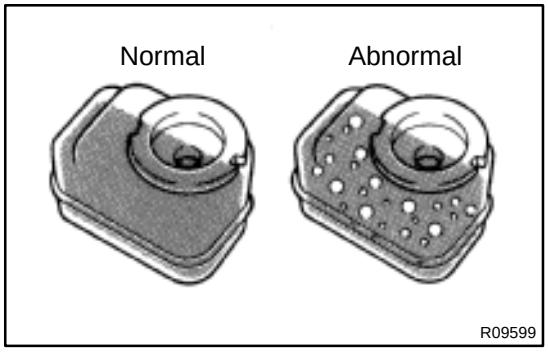

9. CHECK FLUID LEVEL
(See page SR–5)

SR06F–01

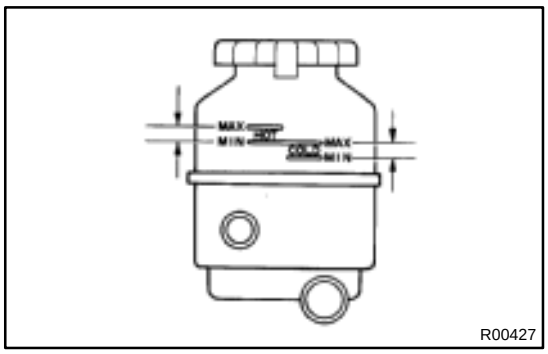

INSPECTION

1. CHECK FLUID LEVEL

(a) Keep the vehicle level.

(b) With the engine stopped, check the fluid level in the oil reservoir.

If necessary, add fluid.

Fluid: ATF DEXRON® II or III

HINT:

Check that the fluid level is within the HOT LEVEL range on the reservoir. If the fluid is cold, check that it is within the COLD LEVEL range.

(c) Start the engine and run it at idle.

(d) Turn the steering wheel from lock to lock several times to boost fluid temperature.

Fluid temperature: 80˚C (176˚F)

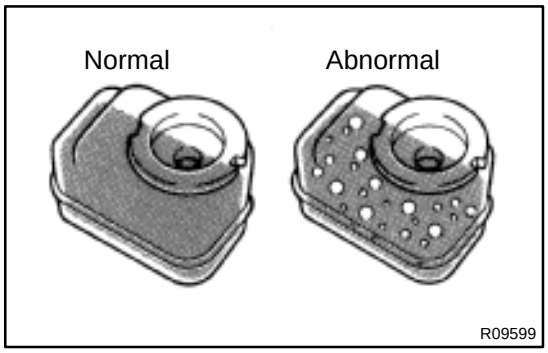

(e) Check for foaming or emulsification.

If there is foaming or emulsification, bleed power steering system.

(See page SR–4)

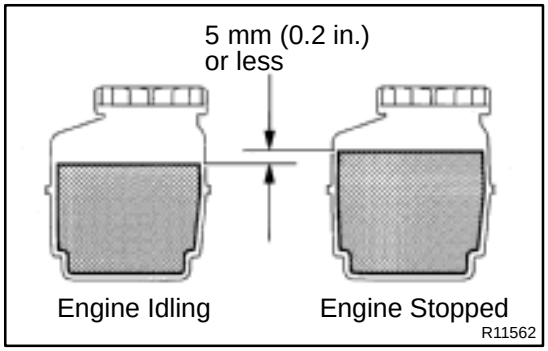

(f) With the engine idling, measure the fluid level in the oil reservoir.

(g) Stop the engine.

(h) Wait a few minutes and remeasure the fluid level in the oil reservoir.

Maximum fluid level rise: 5 mm (0.20 in.)

If a problem is found, bleed power steering system.

(See page SR–4)

(i) Check the fluid level.

2. CHECK STEERING FLUID PRESSURE

(a) Disconnect the pressure feed tube.
(See page SR–21)

(b) Connect SST, as shown below.
SST 09640–10010 (09641–01010, 09641–01030, 09641–01060)

NOTICE:
Check that the valve of the SST is in the open position.

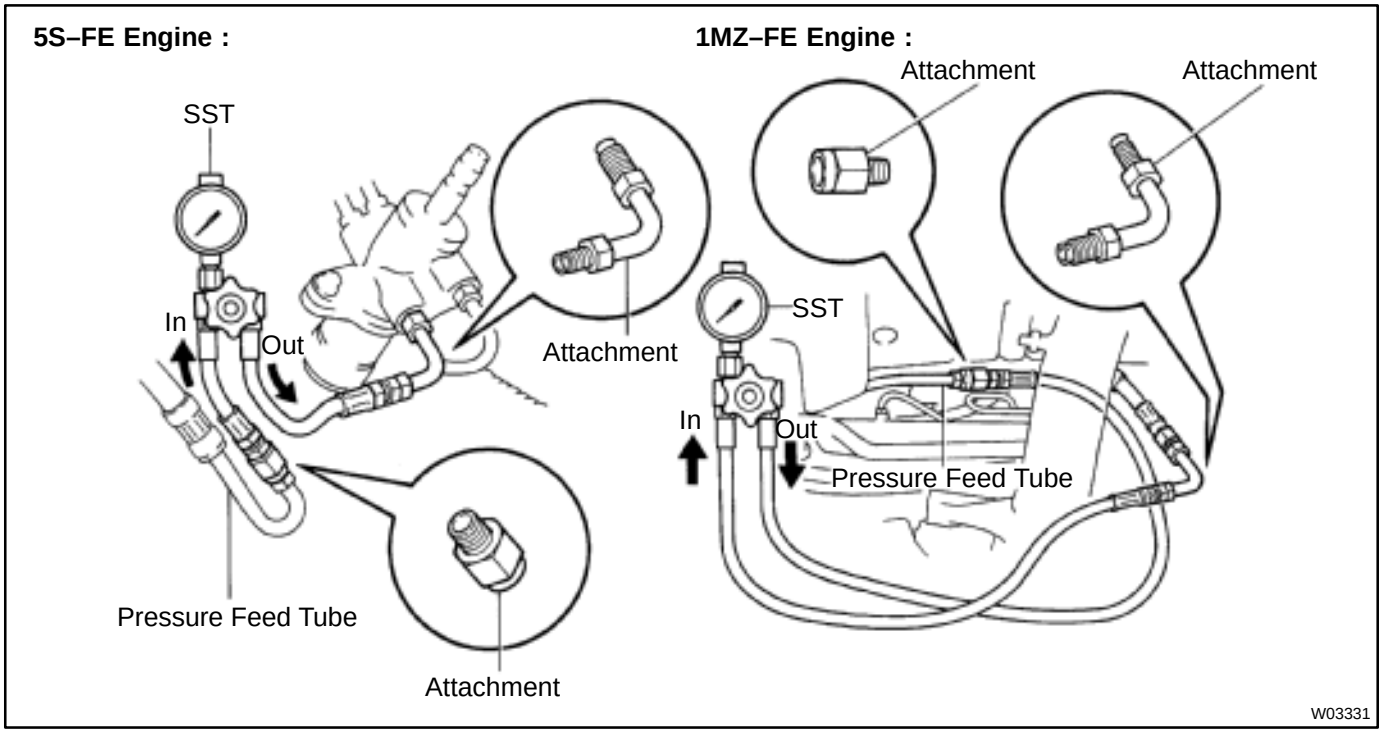

(c) Bleed the power steering system.
(See page SR–4)

(d) Start the engine and run it at idle.

(e) Turn the steering wheel from lock to lock several times to boost fluid temperature.
Fluid temperature: 80 ˚C (176 ˚F)

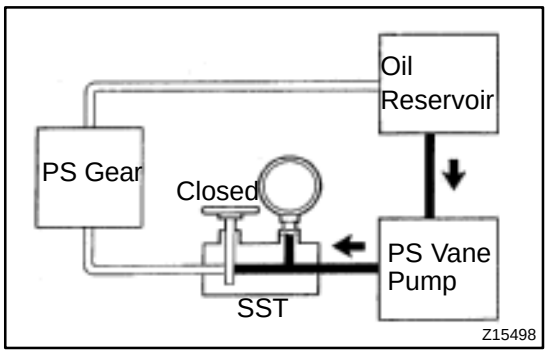

(f) With the engine idling, close the valve of the SST and observe the reading on the SST.
Minimum fluid pressure:
7,845 kPa (80 kgf·cm^2, 1,138 psi)

NOTICE:

★ **Do not keep the valve closed for more than 10 seconds.**

★ **Do not let the fluid temperature become too high.**

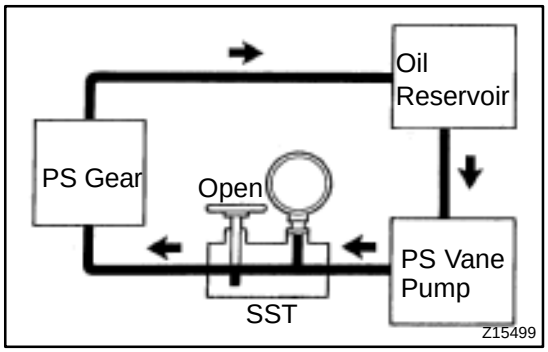

(g) With the engine idling, open the valve fully.

(h) Measure the fluid pressure at engine speeds of 1,000 rpm and 3,000 rpm.
Difference fluid pressure:
490 kPa (5 kgf·cm^2, 71 psi) or less

NOTICE:
Do not turn the steering wheel.

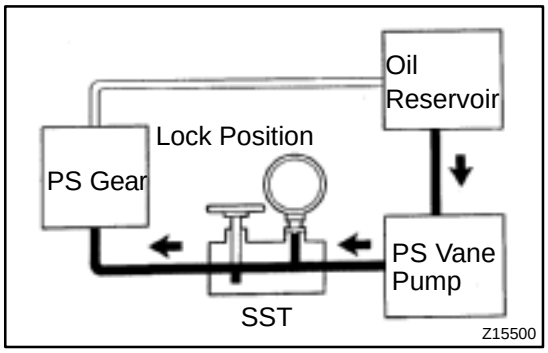

(i) With the engine idling and valve fully opened, turn the steering wheel to full lock.
Minimum fluid pressure:
7,845 kPa (80 kgf·cm^2, 1,138 psi)

NOTICE:

★ **Do not maintain lock position for more than 10 seconds.**

★ **Do not let the fluid temperature become too high.**

(j) Disconnect the SST.

(k) Connect the pressure feed tube.
(See page SR–28)

(l) Bleed the power steering system.
(See page SR–4)

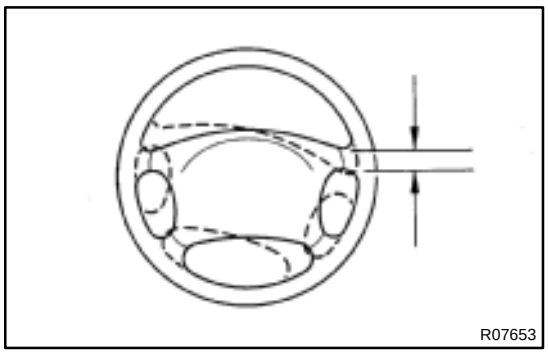
R07653

STEERING WHEEL

SR06G–01

INSPECTION

1. CHECK STEERING WHEEL FREEPLAY

With the vehicle stopped and tires facing straight ahead, rock the steering wheel gently back and forth with light finger pressure.

Freeplay should not exceed the maximum.

Maximum freeplay: 30 mm (1.18 in.)

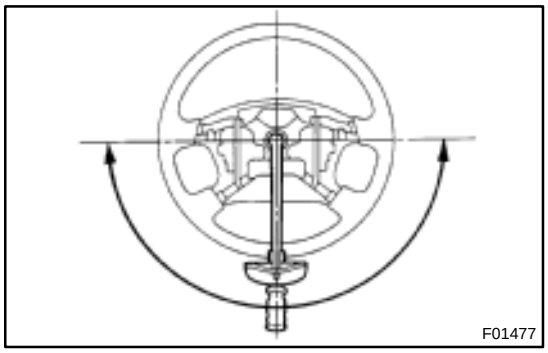
F01477

2. CHECK STEERING EFFORT

(a) Center the steering wheel.

(b) Remove the steering wheel pad.
(See page SR–11)

(c) Start the engine and run it at idle.

(d) Measure the steering effort in both directions.
Reference: 5.9 N·m (60 kgf·cm, 52 in.·lbf)

HINT:

Be sure to consider the tire type, pressure and contact surface before making your diagnosis.

(e) Torque the steering wheel set nut.
Torque: 35 N·m (360 kgf·cm, 26 ft·lbf)

(f) Install the steering wheel pad.
(See page SR–16)

TILT STEERING COLUMN

COMPONENTS

SR06H–03

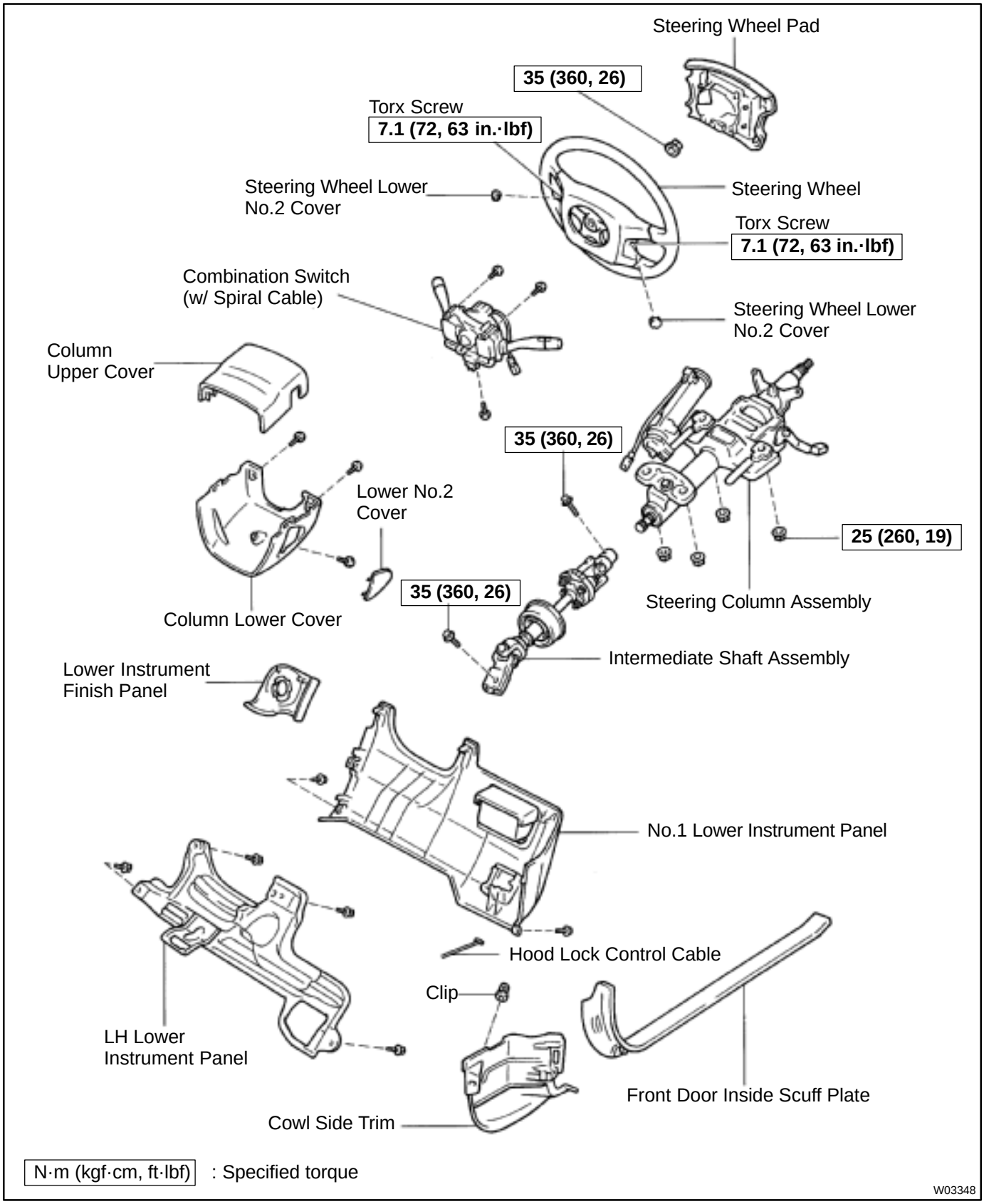

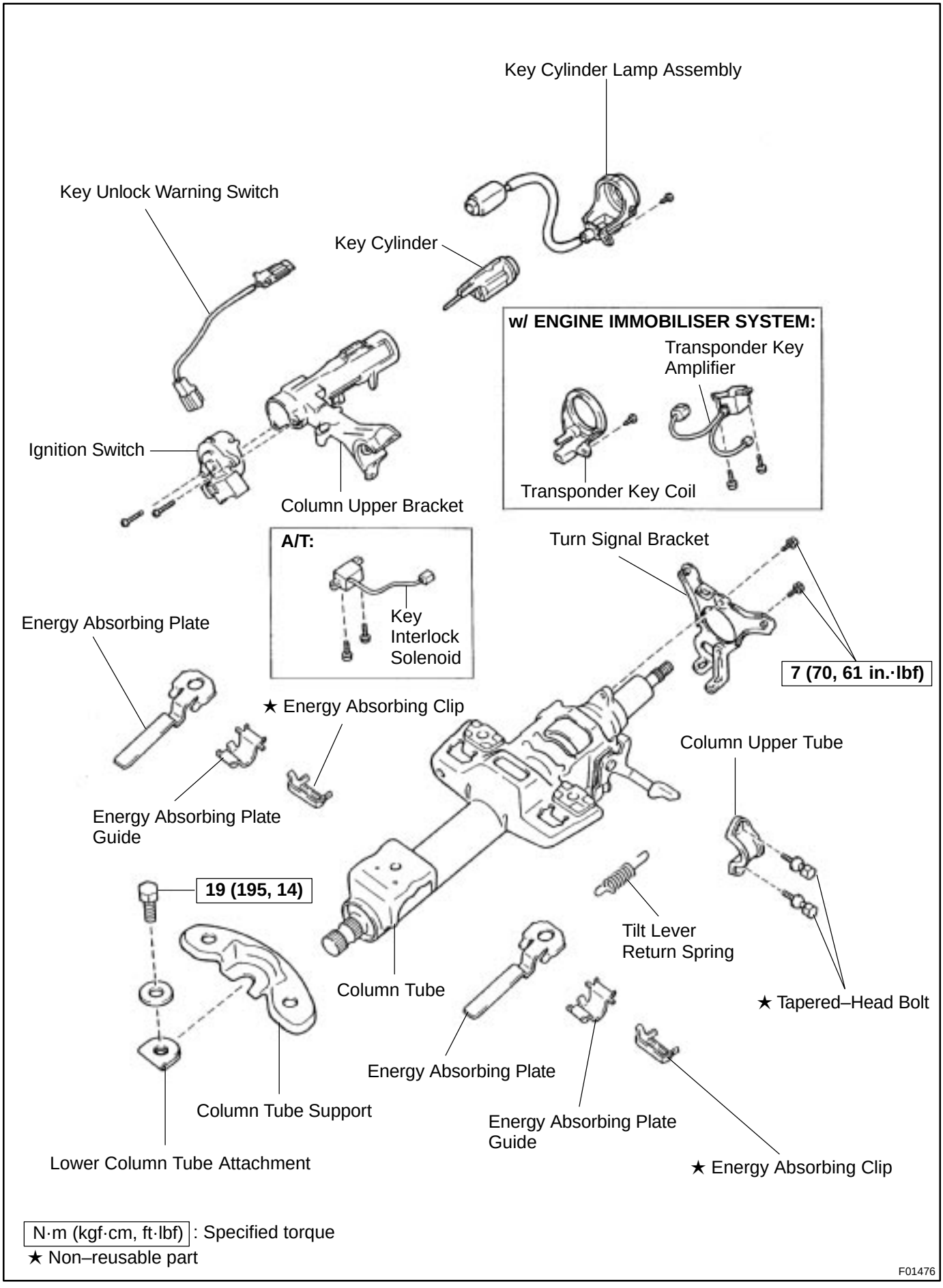
Key Cylinder Lamp Assembly
Key Unlock Warning Switch
Key Cylinder
w/ ENGINE IMMOBILISER SYSTEM:
Transponder Key Amplifier
Transponder Key Coil
Ignition Switch
Column Upper Bracket
A/T:
Key Interlock Solenoid
Turn Signal Bracket
Energy Absorbing Plate
7 (70, 61 in.·lbf)
★ Energy Absorbing Clip
Column Upper Tube
Energy Absorbing Plate Guide
19 (195, 14)
Tilt Lever Return Spring
Column Tube
★ Tapered–Head Bolt
Energy Absorbing Plate
Column Tube Support
Energy Absorbing Plate Guide
Lower Column Tube Attachment
★ Energy Absorbing Clip
N·m (kgf·cm, ft·lbf) : Specified torque
★ Non–reusable part
F01476

SR06I–03

REMOVAL

1. REMOVE STEERING WHEEL PAD

NOTICE:

- ★ **If the airbag connector is disconnected with the ignition switch at ON or ACC, DTCs will be recorded.**
- ★ **Never use airbag parts from another vehicle. When replacing parts, replace with new ones.**

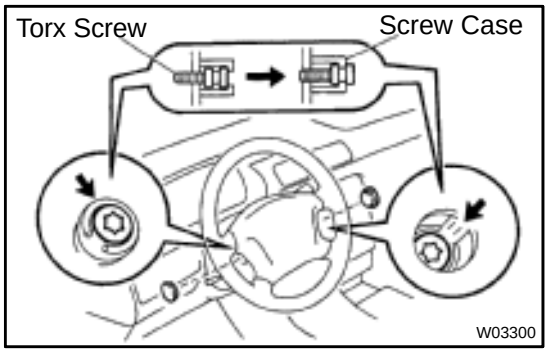

(a) Place the front wheels facing straight ahead.
(b) Remove the 2 steering wheel lower No.2 covers.
(c) Using a torx socket wrench, loosen the 2 torx screws.

HINT:

Loosen the 2 screws until the groove along the screw circumference catches on the screw case.

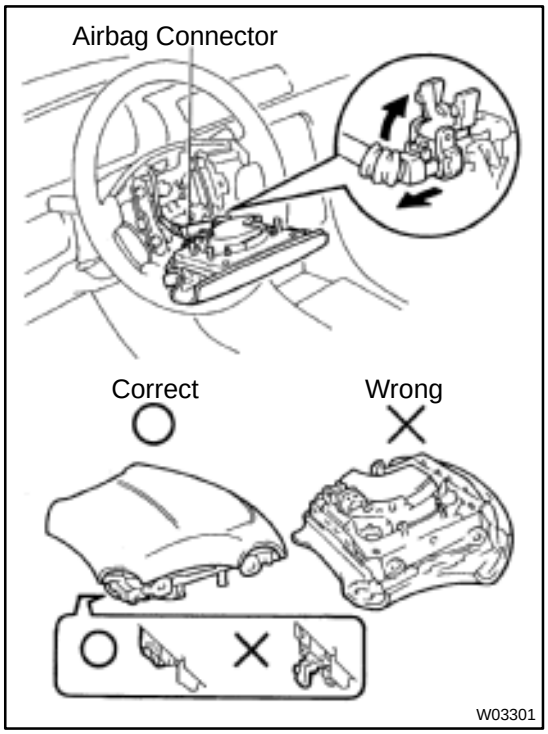

(d) Pull the pad out from the steering wheel and disconnect the airbag connector.

CAUTION:

- ★ **When storing the wheel pad, keep the upper surface of the pad facing upward.**
- ★ **Never disassemble the wheel pad.**

NOTICE:

When removing the wheel pad, take care not to pull the airbag wire harness.

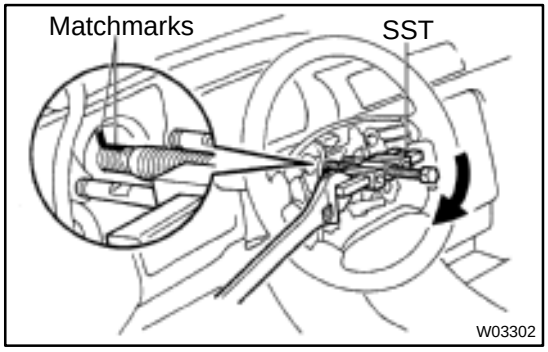

2. REMOVE STEERING WHEEL

(a) Disconnect the connector.
(b) Remove the steering wheel set nut.
(c) Place matchmarks on the steering wheel and main shaft assembly.
(d) Using SST, remove the wheel.

SST 09950–50012 (09951–05010, 09952–05010, 09953–05020, 09954–05020)

3. REMOVE UPPER AND LOWER COLUMN COVERS

(a) Remove the lower No.2 cover from the lower cover.

(b) Remove the 3 screws.

4. REMOVE FRONT DOOR INSIDE SCUFF PLATE

5. REMOVE COWL SIDE TRIM

Remove the clip.

6. REMOVE No.1 LOWER INSTRUMENT PANEL

(a) Remove the 2 screws.

(b) Disconnect the hood lock control cable.

7. REMOVE LH LOWER INSTRUMENT PANEL

Remove the 4 bolts.

8. REMOVE LOWER INSTRUMENT FINISH PANEL

9. REMOVE COMBINATION SWITCH WITH SPIRAL CABLE

(a) Disconnect the 3 connectors.

(b) Disconnect the airbag connector.

(c) Remove the 3 screws.

10. REMOVE SPIRAL CABLE

(See page BE–23)

NOTICE:

Do not disassemble the cable or apply oil to it.

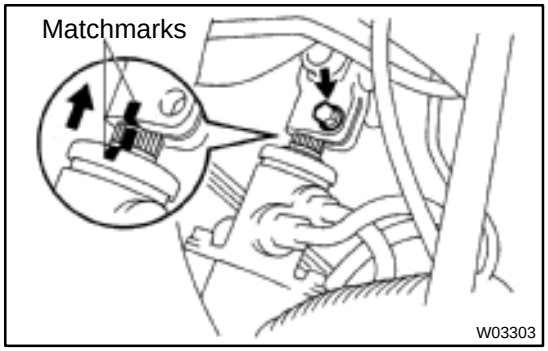

11. DISCONNECT INTERMEDIATE SHAFT ASSEMBLY

(a) Place matchmarks on the intermediate shaft and control valve shaft.

(b) Remove the bolt.

12. REMOVE INTERMEDIATE SHAFT ASSEMBLY

Remove the bolt.

13. REMOVE STEERING COLUMN ASSEMBLY

(a) Disconnect the connectors.

(b) Remove the 4 column assembly set nuts.

SR06J–01

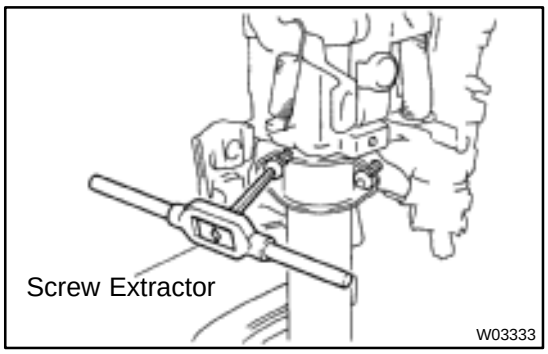

DISASSEMBLY

NOTICE:

When using a vise, do not overtighten it.

1. w/ ENGINE IMMOBILISER SYSTEM:
REMOVE TRANSPONDER KEY COIL WITH KEY CYLINDER LAMP ASSEMBLY

Remove the screw.

2. w/ ENGINE IMMOBILISER SYSTEM:
REMOVE KEY CYLINDER LAMP ASSEMBLY

Remove the lamp assembly from the key coil.

3. w/o ENGINE IMMOBILISER SYSTEM:
REMOVE KEY CYLINDER LAMP ASSEMBLY

Remove the screw.

4. REMOVE COLUMN UPPER BRACKET AND COLUMN UPPER CLAMP

(a) Using a centering punch, mark the center of the 2 tapered–head bolts.
(b) Using a 3–4 mm (0.12–0.16 in.) drill, drill into the 2 bolts.
(c) Using a screw extractor, remove the 2 bolts.

5. REMOVE TURN SIGNAL BRACKET

Remove the 2 bolts.

6. REMOVE TILT LEVER RETURN SPRING

7. REMOVE COLUMN TUBE SUPPORT

(a) Remove the bolt and washer.
(b) Remove the tube support with lower column tube attachment.
(c) Remove the tube attachment from the tube support.

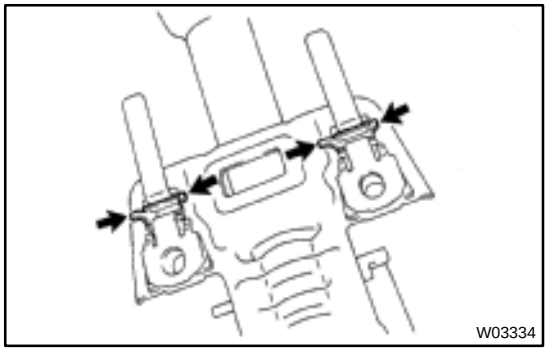

8. REMOVE 2 ENERGY ABSORBING PLATES

(a) Using pliers, remove the energy absorbing clip.
(b) Remove the energy absorbing plate, energy absorbing plate guide.

SR06K–01

INSPECTION

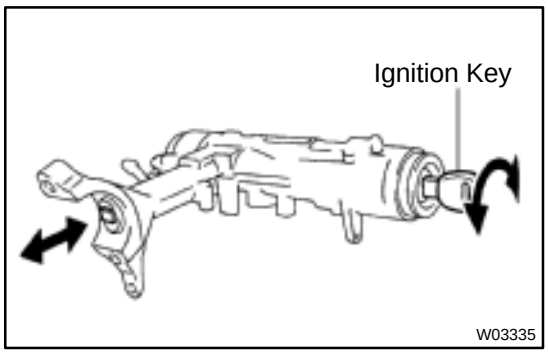

1. INSPECT STEERING LOCK OPERATION

Check that the steering lock mechanism operates properly.

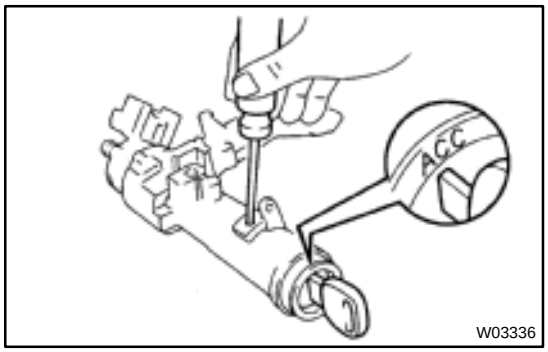

2. IF NECESSARY, REPLACE KEY CYLINDER

(a) Place the ignition key at the ACC position.

(b) Push down the stop pin with a screwdriver, and pull out the cylinder.

(c) Install a new cylinder.

HINT:

Make sure the key is at the ACC position.

3. INSPECT IGNITION SWITCH

(See page BE–14)

4. IF NECESSARY, REPLACE IGNITION SWITCH

(a) Remove the 2 screws.

(b) Install a new switch with the 2 screws.

5. INSPECT KEY UNLOCK WARNING SWITCH

(See page BE–14)

6. IF NECESSARY, REPLACE KEY UNLOCK WARNING SWITCH

(a) Slide out the switch.

(b) Install a new switch.

7. A/T:

INSPECT KEY INTERLOCK SOLENOID

(A140E: See page AX–13)

(A541E: See page AX–17)

8. A/T:

IF NECESSARY, REPLACE KEY INTERLOCK SOLENOID

(a) Remove the 2 screws.

(b) Install a new solenoid with the 2 screws.

9. w/ ENGINE IMMOBILISER SYSTEM:

INSPECT TRANSPONDER KEY COIL

(See page BE–128)

10. w/ ENGINE IMMOBILISER SYSTEM:

IF NECESSARY, REPLACE TRANSPONDER KEY COIL

11. w/ ENGINE IMMOBILISER SYSTEM:

IF NECESSARY, REPLACE TRANSPONDER KEY AMPLIFIER

(a) Remove the 2 screws.

(b) Install a new key amplifier with the 2 screws.

SR06L–01

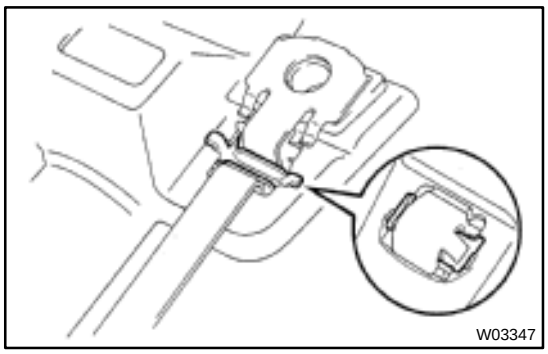

REASSEMBLY

NOTICE:

When using a vise, do not overtighten it.

1. INSTALL 2 ENERGY ABSORBING PLATES

(a) Install the energy absorbing plate guide and absorbing plate.

(b) Install the new energy absorbing clip.

2. INSTALL COLUMN TUBE SUPPORT

(a) Install the tube attachment to the tube support.

(b) Torque the bolt and washer.

Torque: 19 N·m (195 kgf·cm, 14 ft·lbf)

3. INSTALL TILT LEVER RETURN SPRING

4. INSTALL TURN SIGNAL BRACKET

Torque the 2 bolts.

Torque: 7 N·m (70 kgf·cm, 61 in.·lbf)

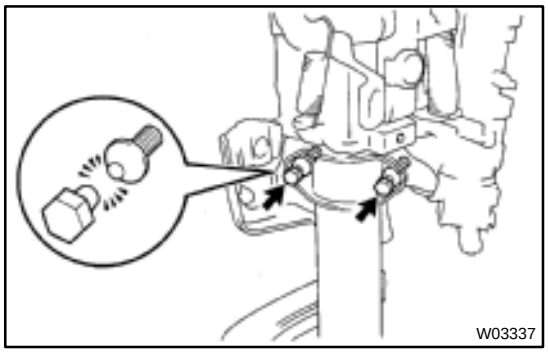

5. INSTALL COLUMN UPPER BRACKET AND COLUMN UPPER CLAMP

Tighten the 2 new tapered–head bolts until the bolt heads break off.

6. w/ ENGINE EMMOBILISER SYSTEM: INSTALL KEY CYLINDER LAMP ASSEMBLY

Install the lamp assembly to the key coil.

7. w/ ENGINE EMMOBILISER SYSTEM: INSTALL TRANSPONDER KEY COIL WITH KEY CYLINDER LAMP ASSEMBLY

Tighten the screw.

8. w/o ENGINE EMMOBILISER SYSTEM: INSTALL KEY CYLINDER LAMP ASSEMBLY

Tighten the screw.

SR06M–01

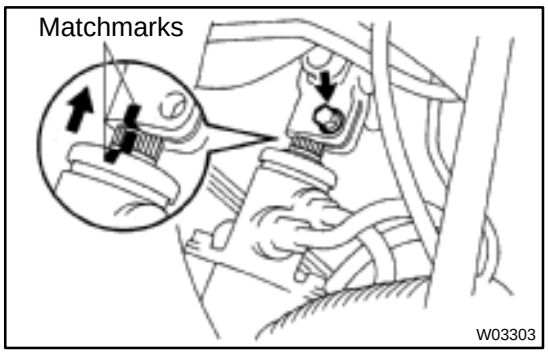

INSTALLATION

1. INSTALL STEERING COLUMN ASSEMBLY

(a) Torque the 4 column assembly set nuts.

Torque: 25 N·m (260 kgf·cm, 19 ft·lbf)

(b) Connect the connectors.

2. INSTALL INTERMEDIATE SHAFT ASSEMBLY

Torque the bolt.

Torque: 35 N·m (360 kgf·cm, 26 ft·lbf)

3. CONNECT INTERMEDIATE SHAFT ASSEMBLY

(a) Align the matchmarks on the intermediate shaft and control valve shaft.

(b) Torque the bolt.

Torque: 35 N·m (360 kgf·cm, 26 ft·lbf)

4. INSTALL SPIRAL CABLE

(See page BE–23)

5. INSTALL COMBINATION SWITCH WITH SPIRAL CABLE

(a) Tighten the 3 screws.

(b) Connect the airbag connector.

(c) Connect the 3 connectors.

6. INSTALL LOWER INSTRUMENT FINISH PANEL

7. INSTALL LH LOWER INSTRUMENT PANEL

Tighten the 4 bolts.

8. INSTALL No.1 LOWER INSTRUMENT PANEL

(a) Connect the hood lock control cable.

(b) Tighten the 2 screws.

9. INSTALL COWL SIDE TRIM

Install the clip.

10. INSTALL FRONT DOOR INSIDE SCUFF PLATE

11. INSTALL UPPER AND LOWER COLUMN COVERS

(a) Tighten the 3 screws.

(b) Install the lower No.2 cover to the lower cover.

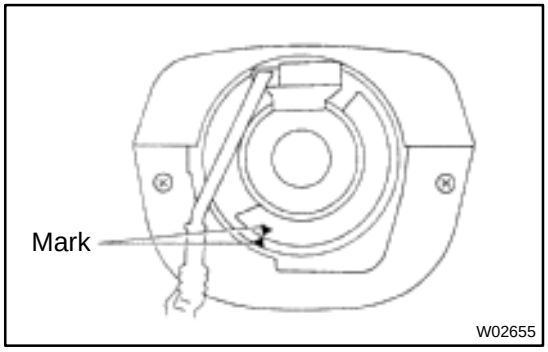

12. CENTER SPIRAL CABLE

(a) Check that the front wheels are facing straight ahead.

(b) Turn the cable counterclockwise by hand until it becomes harder to turn the cable.

(c) Then rotate the cable clockwise about 3 turns to align the mark.

HINT:

The cable will rotate about 3 turns to either left or right of the center.

13. INSTALL STEERING WHEEL

(a) Align the matchmarks on the wheel and main shaft.

(b) Torque the wheel set nut.

Torque: 35 N·m (360 kgf·cm, 26 ft·lbf)

(c) Connect the connector.

14. INSTALL STEERING WHEEL PAD

NOTICE:

- ★ **Make sure the wheel pad is installed to the specified torque.**
- ★ **If the wheel pad has been dropped, or there are cracks, dents or other defects in the case or connector, replace the wheel pad with a new one.**
- ★ **When installing the wheel pad, take care that the wirings do not interfere with other parts and are not pinched between other parts.**

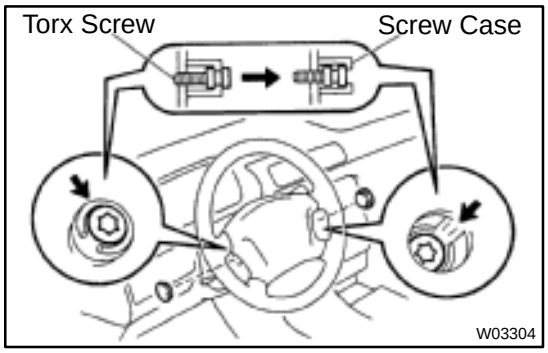

(a) Connect the airbag connector.

(b) Install the pad after confirming that the circumference groove of the torx screw is caught on the screw case.

(c) Using a torx socket wrench, torque the 2 screws.

Torque: 7.1 N·m (72 kgf·cm, 63 in.·lbf)

(d) Install the 2 steering wheel lower No.2 covers.

15. CHECK STEERING WHEEL CENTER POINT

POWER STEERING VANE PUMP

COMPONENTS

SR06N–03

5S–FE Engine :

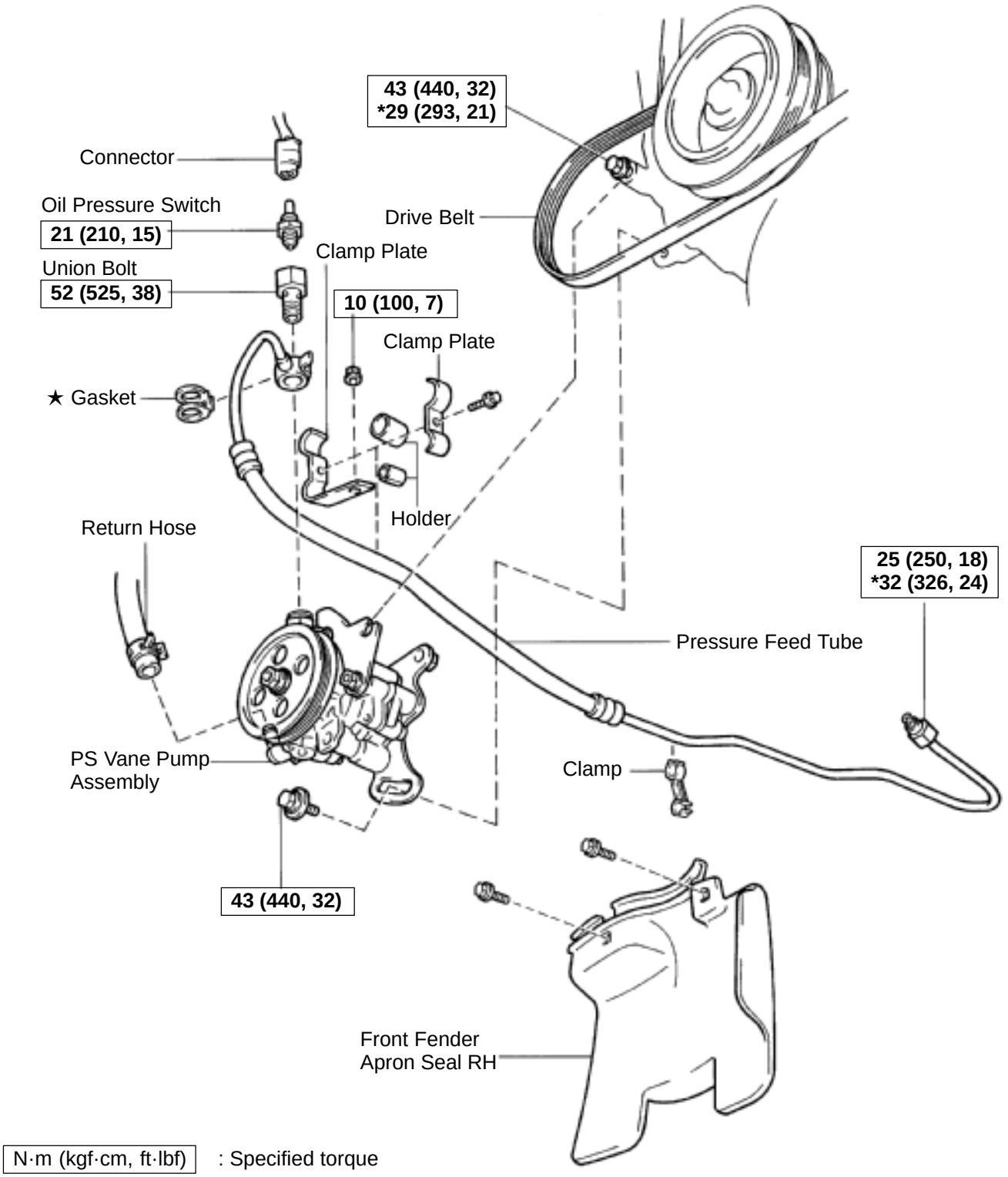

N·m (kgf·cm, ft·lbf) : Specified torque

★ Non–reusable part

* For use with SST

W03364

1MZ–FE Engine :

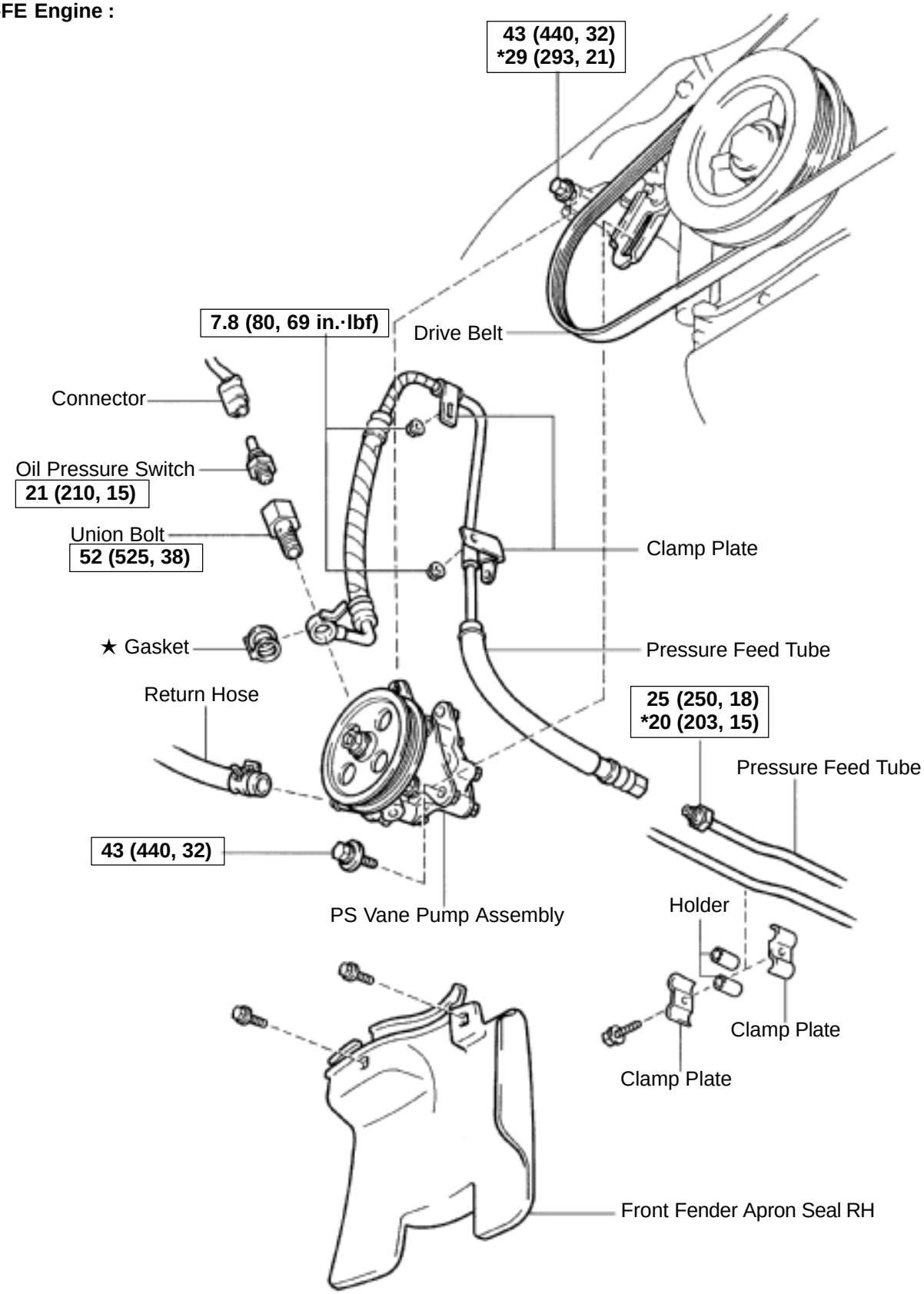

N·m (kgf·cm, ft·lbf) : Specified torque

★ Non–reusable part

* For use with SST

W03365

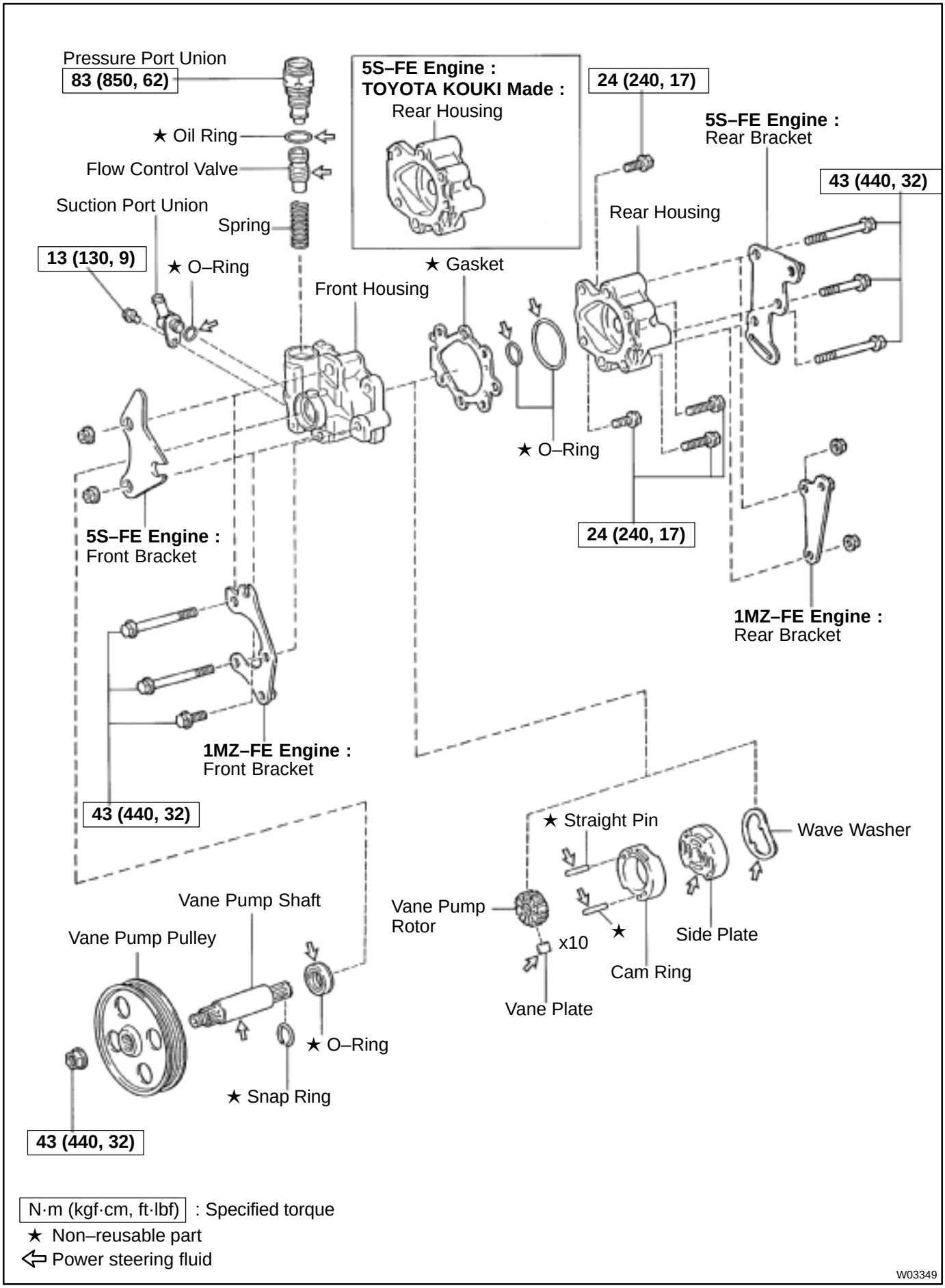
Pressure Port Union
83 (850, 62)
★ Oil Ring
Flow Control Valve
Suction Port Union
Spring
13 (130, 9)
★ O–Ring
5S–FE Engine :
TOYOTA KOUKI Made :
Rear Housing
24 (240, 17)
5S–FE Engine :
Rear Bracket
43 (440, 32)
Rear Housing
★ Gasket
Front Housing
★ O–Ring
24 (240, 17)
5S–FE Engine :
Front Bracket
1MZ–FE Engine :
Rear Bracket
1MZ–FE Engine :
Front Bracket
43 (440, 32)
★ Straight Pin
Wave Washer
Vane Pump Shaft
Vane Pump Pulley
Vane Pump
Rotor
x10
★
Side Plate
Cam Ring
Vane Plate
★ O–Ring
★ Snap Ring
43 (440, 32)
N·m (kgf·cm, ft·lbf) : Specified torque
★ Non–reusable part
⇦ Power steering fluid
W03349

SR06O–01

REMOVAL

1. REMOVE FRONT FENDER APRON SEAL RH

Remove the 2 bolts.

2. DISCONNECT RETURN HOSE

NOTICE:

Take care not to spill fluid on the drive belt.

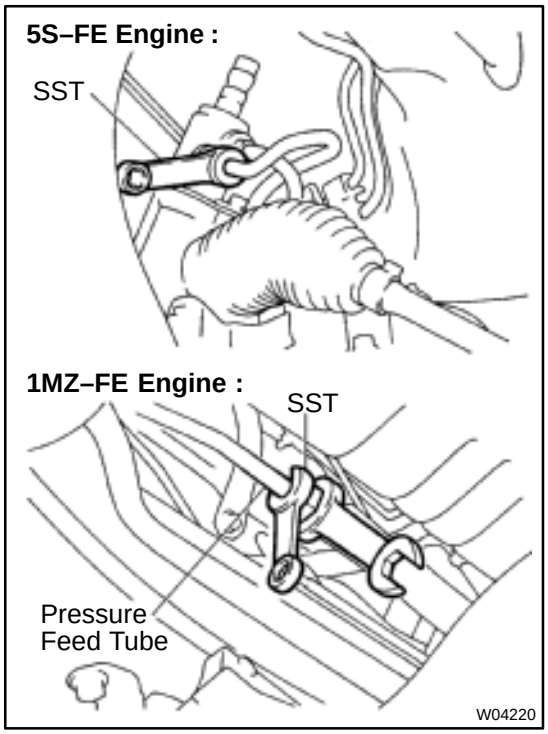

3. DISCONNECT PRESSURE FEED TUBE

(a) 5S–FE Engine:
Remove the clamp plate set bolt and nut.

(b) 5S–FE Engine:
Remove the 2 clamp plates and 2 holders from the tube.

(c) 5S–FE Engine:
Remove the clamp from the tube.

(d) 1MZ–FE Engine:
Remove the 2 clamp plate set nuts.

(e) 1MZ–FE Engine:
Remove the bolt.

(f) 1MZ–FE Engine:
Remove the 2 clamp plates and 2 holders from the tube.

(g) 5S–FE and 1MZ–FE Engines:
Using SST, disconnect the tube.
SST 09631–22020

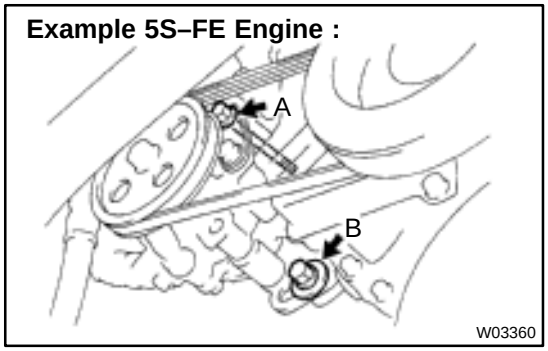

4. REMOVE DRIVE BELT

Loosen the 2 (A and B) bolts.

5. REMOVE PS VANE PUMP ASSEMBLY WITH PRESSURE FEED TUBE

(a) Disconnect the connector from the oil pressure switch.

(b) Loosen bolt A sufficiently so that pump assembly can be removed.

HINT:

Bolt A cannot be removed.

6. REMOVE PRESSURE FEED TUBE

(a) Remove the oil pressure switch from the union bolt.

NOTICE:

Be careful not to drop the switch.

If the switch is dropped or strongly damaged, replace it with a new one.

(b) Remove the union bolt and gasket.

SR06P–01

DISASSEMBLY

Example 5S–FE Engine :

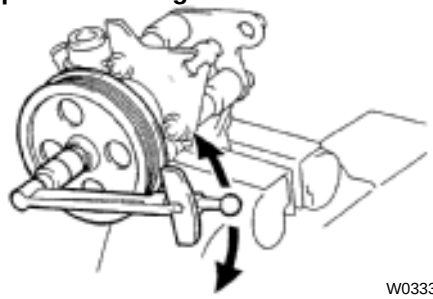

W03338

NOTICE:

When using a vise, do not overtighten it.

1. MEASURE PS VANE PUMP ROTATING TORQUE

(a) Check that the pump rotates smoothly without abnormal noise.

(b) Using a torque wrench, check the pump rotating torque.

5S–FE and 1MZ–FE Engines:

Rotating torque:

0.3 N·m (2.8 kgf·cm, 2.4 in.·lbf) or less

Example 5S–FE Engine :

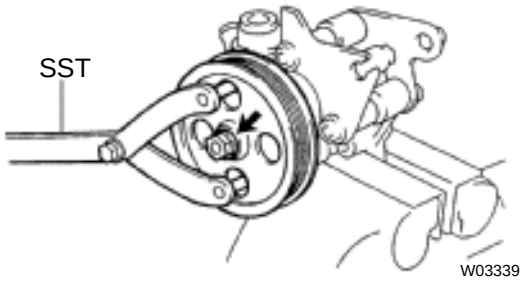

W03339

2. REMOVE VANE PUMP PULLEY

Using SST, to stop the pulley rotating, remove the nut.

SST 09960–10010 (09962–01000, 09963–01000)

3. REMOVE FRONT AND REAR BRACKETS

Remove the 3 bolts and 2 nuts.

4. REMOVE SUCTION PORT UNION

(a) Remove the bolt.

(b) Remove the O–ring from the union.

5. REMOVE PRESSURE PORT UNION, FLOW CONTROL VALVE AND SPRING

Remove the O–ring from the union.

6. REMOVE REAR HOUSING

(a) Remove the 4 bolts.

(b) Remove the 2 O–rings from the housing.

7. REMOVE WAVE WASHER

8. REMOVE SIDE PLATE

9. REMOVE GASKET

10. REMOVE CAM RING, 10 VANE PLATES AND VANE PUMP ROTOR

Using a screwdriver, remove the snap ring from the vane pump shaft.

NOTICE:

Take care not to drop the plate.

11. REMOVE VANE PUMP SHAFT

12. REMOVE STRAIGHT PINS

Remove the 2 pins from the front housing.

SR06Q–01

INSPECTION

NOTICE:

When using a vise, do not overtighten it.

1. CHECK OIL CLEARANCE BETWEEN VANE PUMP SHAFT AND BUSHING

Using a micrometer and caliper gauge, measure the oil clearance.

5S–FE and 1MZ–FE Engines:

Standard clearance:

0.03 – 0.05 mm (0.0012 – 0.0020 in.)

Maximum clearance: 0.07 mm (0.0028 in.)

If it is more than the maximum, replace the front housing and vane pump shaft.

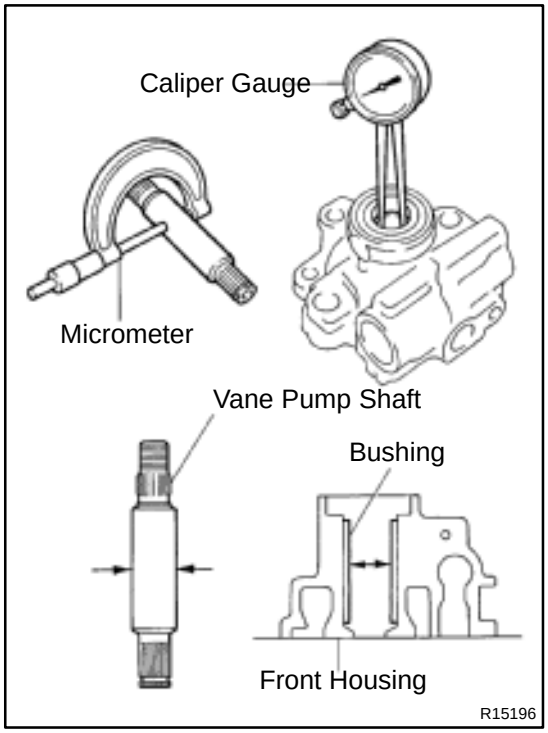

2. INSPECT VANE PUMP ROTOR AND VANE PLATES

(a) Using a micrometer, measure the height, thickness and length of the plates.

5S–FE and 1MZ–FE Engines:

Minimum height: 8.6 mm (0.339 in.)

Minimum thickness: 1.397 mm (0.0550 in.)

Minimum length: 14.991 mm (0.5902 In.)

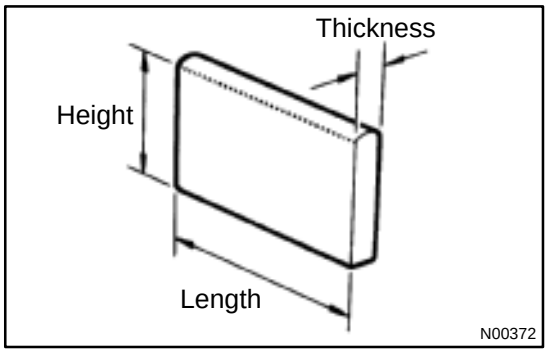

(b) Using a feeler gauge, measure the clearance between the rotor groove and plate.

5S–FE and 1MZ–FE Engines:

Maximum clearance: 0.035 mm (0.0014 in.)

If it is more than the maximum, replace the plate and/or rotor with one having the same mark stamped on the cam ring.

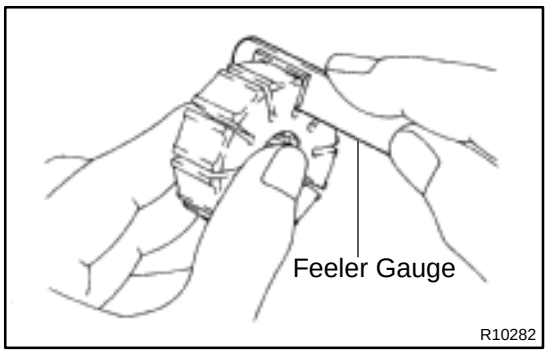

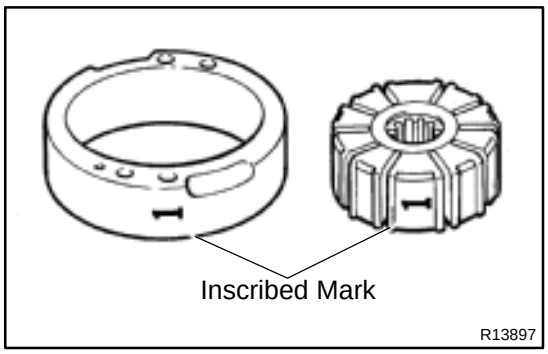

5S–FE and 1MZ–FE Engines:
Inscribed mark: 1, 2, 3, 4 or None

HINT:
There are 5 vane lengths with the following rotor and cam ring marks:

5S–FE and 1MZ–FE Engines:

Rotor and cam ring mark	Vane plate part number	Vane plate length mm (in.)
None	44345–26010	14.999–15.001 (0.59051–0.59059)
1	44345–26020	14.997–14.999 (0.59043–0.59051)
2	44345–26030	14.995–14.997 (0.59035–0.59043)
3	44345–26040	14.993–14.995 (0.59027–0.59035)
4	44345–26050	14.991–14.993 (0.59020–0.59027)

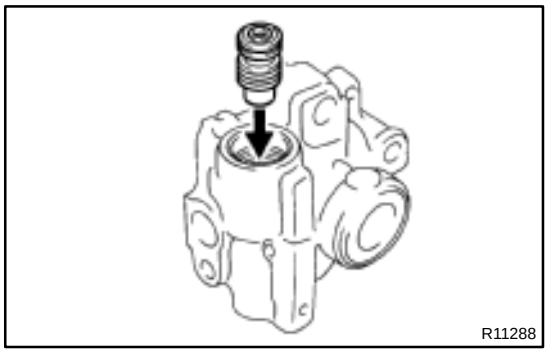

3. INSPECT FLOW CONTROL VALVE

(a) Coat the valve with power steering fluid and check that it falls smoothly into the valve hole by its own weight.

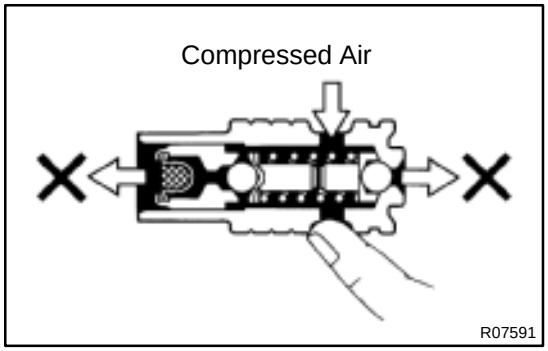

(b) Check the valve for leakage. Close one of the holes and apply 392–490 kPa (4–5 kgf/cm^2, 57–71 psi) of compressed air into the opposite side, and confirm that air does not come out from the end holes.

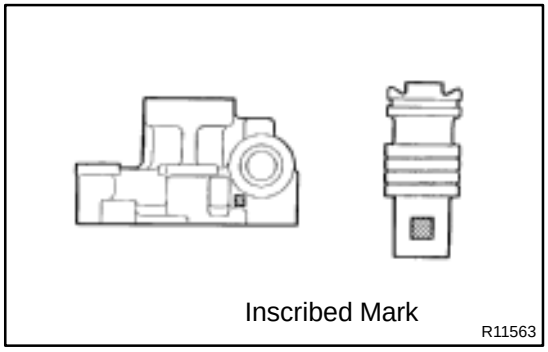

If necessary, replace the valve with one having the same letter as inscribed on the front housing.

5S–FE and 1MZ–FE Engines:
Inscribed mark: A, B, C, D, E or F

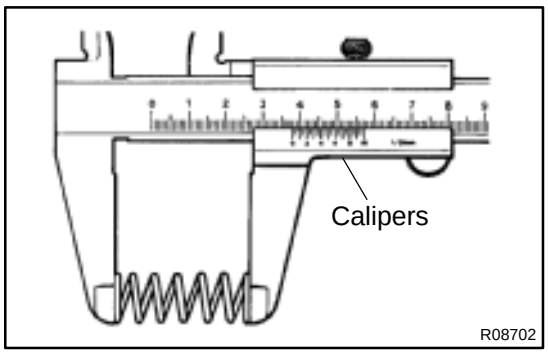

4. INSPECT SPRING

Using a calipers, measure the free length of the spring.

5S–FE and 1MZ–FE Engines:

Minimum free length: 32.3 mm (1.272 in.)

If it is not within the specification, replace the spring.

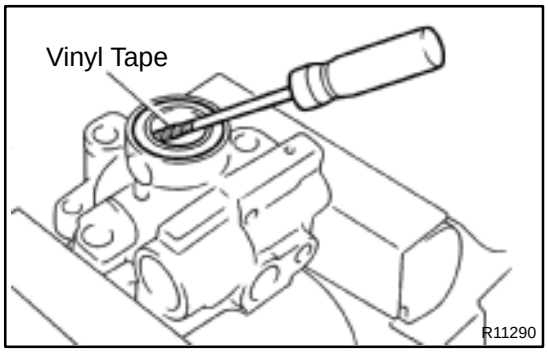

5. IF NECESSARY, REPLACE OIL SEAL

(a) Using a screwdriver with vinyl tape wound around its tip, remove the oil seal.

NOTICE:

Be careful not to damage the front housing.

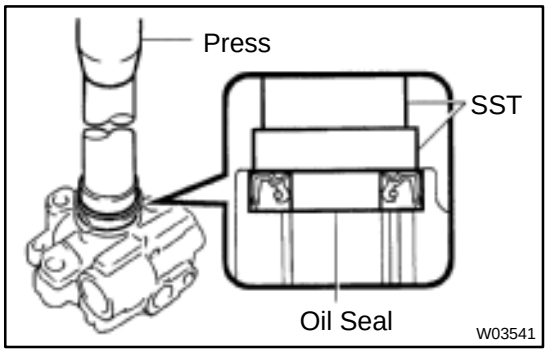

(b) Coat a new oil seal lip with power steering fluid.

(c) Using SST, press in the oil seal.

SST 09950–60010 (09951–00330),
09950–70010 (09951–07100)

NOTICE:

Make sure to install the oil seal facing the correct direction.

SR06R–01

REASSEMBLY

NOTICE:

When using a vise, do not overtighten it.

1. COAT WITH POWER STEERING FLUID
(See page SR–18)

2. INSTALL VANE PUMP SHAFT

3. INSTALL STRAIGHT PINS

Using a plastic hammer, tap in 2 new pins.

NOTICE:

Be careful not to damage the pins.

4. INSTALL CAM RING

Align the holes of the ring and 2 straight pins, and install the ring with the inscribed mark facing outward.

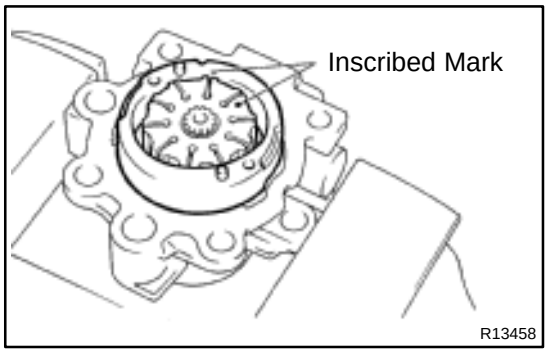

5. INSTALL VANE PUMP ROTOR

(a) Install the rotor with the inscribed mark facing outward.

(b) Install a new snap ring to the vane pump shaft.

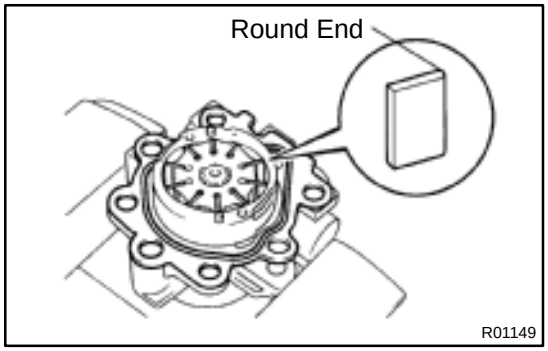

6. INSTALL VANE PLATES

Install the 10 plates with the round end facing outward.

7. INSTALL GASKET

Install a new gasket.

8. INSTALL SIDE PLATE

Align the holes of the plate and 2 straight pins.

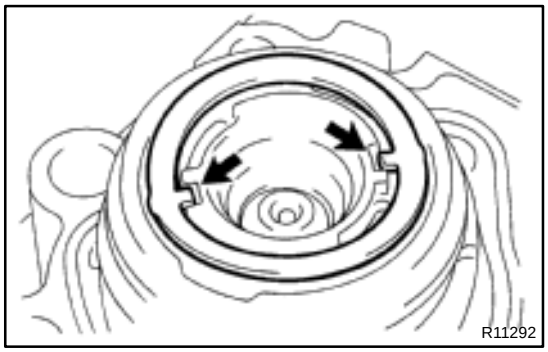

9. INSTALL WAVE WASHER

Install the washer so that its protrusions fit into the slots in the side plate.

10. INSTALL REAR HOUSING

(a) Coat 2 new O–rings with power steering fluid and install them to the housing.

(b) Torque the 4 bolts.

5S–FE and 1MZ–FE Engines:

Torque: 24 N·m (240 kgf·cm, 17 ft·lbf)

11. INSTALL SPRING, FLOW CONTROL VALVE AND PRESSURE PORT UNION

(a) Install the valve facing the correct direction.
(See page SR–18)

(b) Coat a new O–ring with power steering fluid and install it to the union.

(c) Torque the union.
5S–FE and 1MZ–FE Engines:
Torque: 83 N·m (850 kgf·cm, 62 ft·lbf)

12. INSTALL SUCTION PORT UNION

(a) Coat a new O–ring with power steering fluid and install it to the union.

(b) Torque the bolt.
5S–FE and 1MZ–FE Engines:
Torque: 13 N·m (130 kgf·cm, 9 ft·lbf)

13. INSTALL FRONT AND REAR BRACKETS

Torque the 3 bolts and 2 nuts.
5S–FE and 1MZ–FE Engines:
Torque: 43 N·m (440 kgf·cm, 32 ft·lbf)

Example 5S–FE Engine :

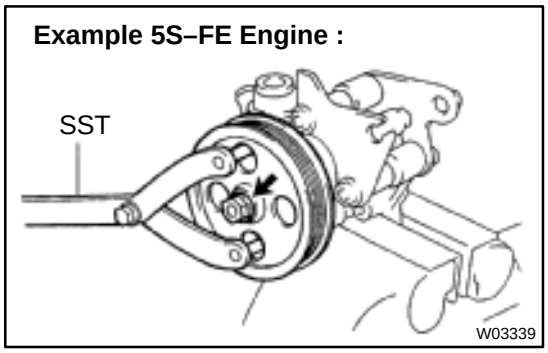

14. INSTALL VANE PUMP PULLEY

Using SST to stop the pulley rotating, torque the nut.
SST 09960–10010 (09962–01000, 09963–01000)
5S–FE and 1MZ–FE Engines:
Torque: 43 N·m (440 kgf·cm, 32 ft·lbf)

15. MEASURE PS VANE PUMP ROTATING TORQUE
(See page SR–22)

SR06S–01

INSTALLATION

1. INSTALL PRESSURE FEED TUBE

(a) Torque the union bolt with a new gasket.

HINT:

Make sure the stopper of the tube is touching the front bracket, as shown, then torque the union bolt.

5S–FE and 1MZ–FE Engines:

Torque: 52 N·m (525 kgf·cm, 38 ft·lbf)

(b) Install the oil pressure switch to the union bolt.

5S–FE and 1MZ–FE Engines:

Torque: 21 N·m (210 kgf·cm, 15 ft·lbf)

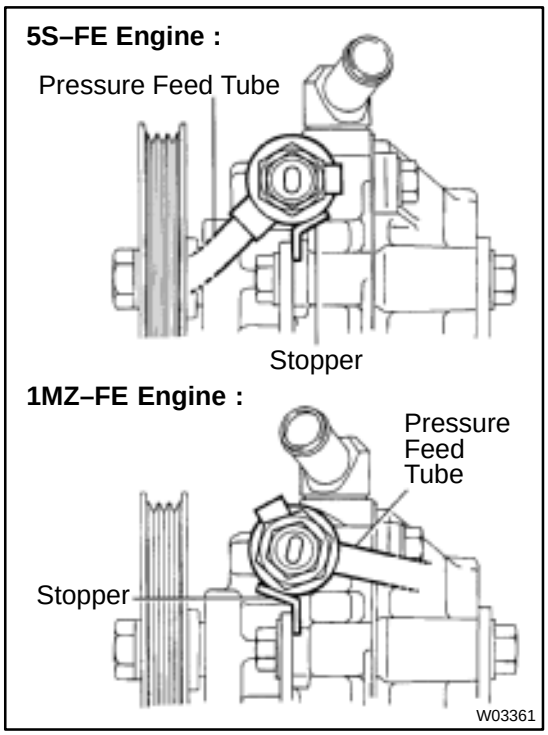

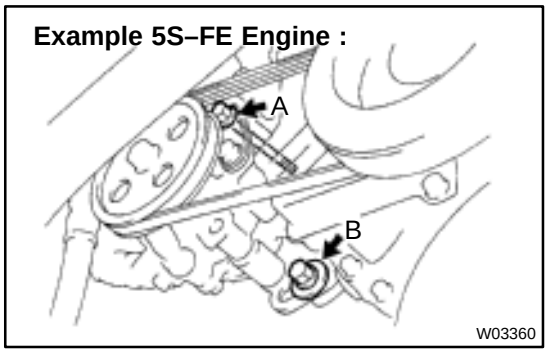

2. INSTALL PS VANE PUMP ASSEMBLY WITH PRESSER FEED TUBE

Temporarily tighten the 2 (A and B) bolts.

3. INSTALL DRIVE BELT

(a) Adjust drive belt tension.

(See page SR–3)

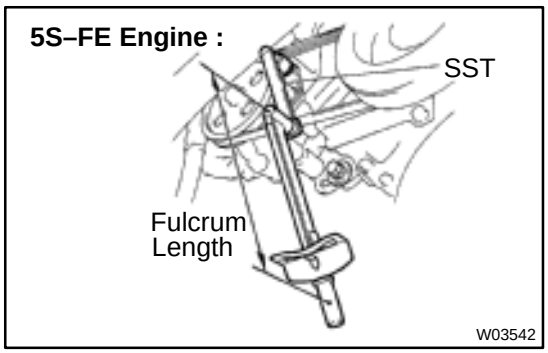

(b) 5S–FE Engine:

Using SST, torque the A bolt.

SST 09249–63010

Torque: 29 N·m (293 kgf·cm, 21 ft·lbf)

HINT:

Use a torque wrench with a fulcrum length of 300 mm (11.81 in.).

1MZ–FE Engine :

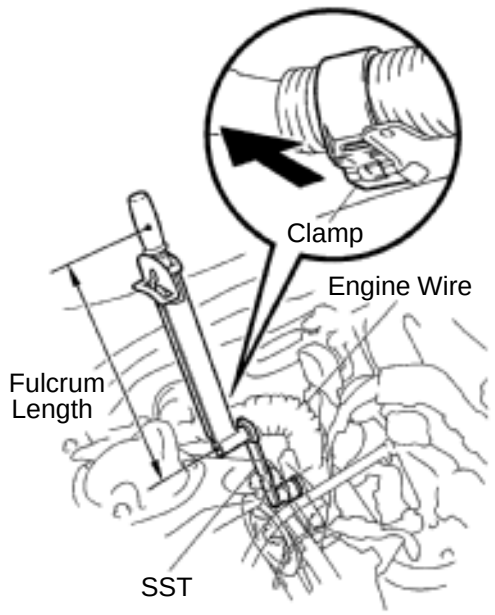

(c) 1MZ–FE Engine:
Using SST, torque the A bolt.
SST 09249–63010
Torque: 29 N·m (293 kgf·cm, 21 ft·lbf)

HINT:

★ Use a torque wrench with a fulcrum length of 300 mm (11.81 in.).

★ Disconnect the clamp with engine wire.

(d) Torque the B bolt.
5S–FE and 1MZ–FE Engines:
Torque: 43 N·m (440 kgf·cm, 32 ft·lbf)

(e) Connect the connector to the oil pressure switch.

NOTICE:
Be careful for oil on the connector.

5S–FE Engine :

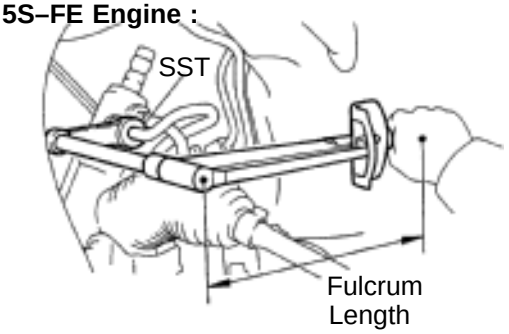

1MZ–FE Engine :

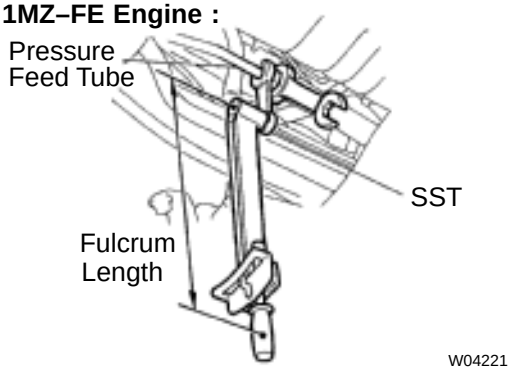

4. CONNECT PRESSURE FEED TUBE

(a) Using SST, connect the tube.
SST 09631–22020
5S–FE Engine:
Torque: 32 N·m (326 kgf·cm, 24 ft·lbf)
1MZ–FE Engine:
Torque: 20 N·m (203 kgf·cm, 15 ft·lbf)

HINT:

★ Use a torque wrench with a fulcrum length of 300 mm (11.81 in.).

★ This torque value is effective in case that SST is parallel to a torque wrench.

(b) 5S–FE Engine:
Install the clamp to the tube.

(c) 5S–FE Engine:
Install the 2 clamp plates and 2 holders to the tube.

(d) 5S–FE Engine:
Install the clamp plate set bolt.

(e) 5S–FE Engine:
Install the clamp plate set nut.
Torque: 10 N·m (100 kgf·cm, 7 ft·lbf)

(f) 1MZ–FE Engine:
Install the 2 clamp plates and 2 holders to the tube.

(g) 1MZ–FE Engine:
Tighten the bolt.

(h) 1MZ–FE Engine:
Install the 2 clamp plate set nuts.
Torque: 7.8 N·m (80 kgf·cm, 69 in.·lbf)

5. CONNECT RETURN HOSE

6. INSTALL FRONT FENDER APRON SEAL RH

Tighten the 2 bolts.

7. BLEED POWER STEERING SYSTEM

(See page SR–4)

POWER STEERING GEAR

SR06T–01

COMPONENTS

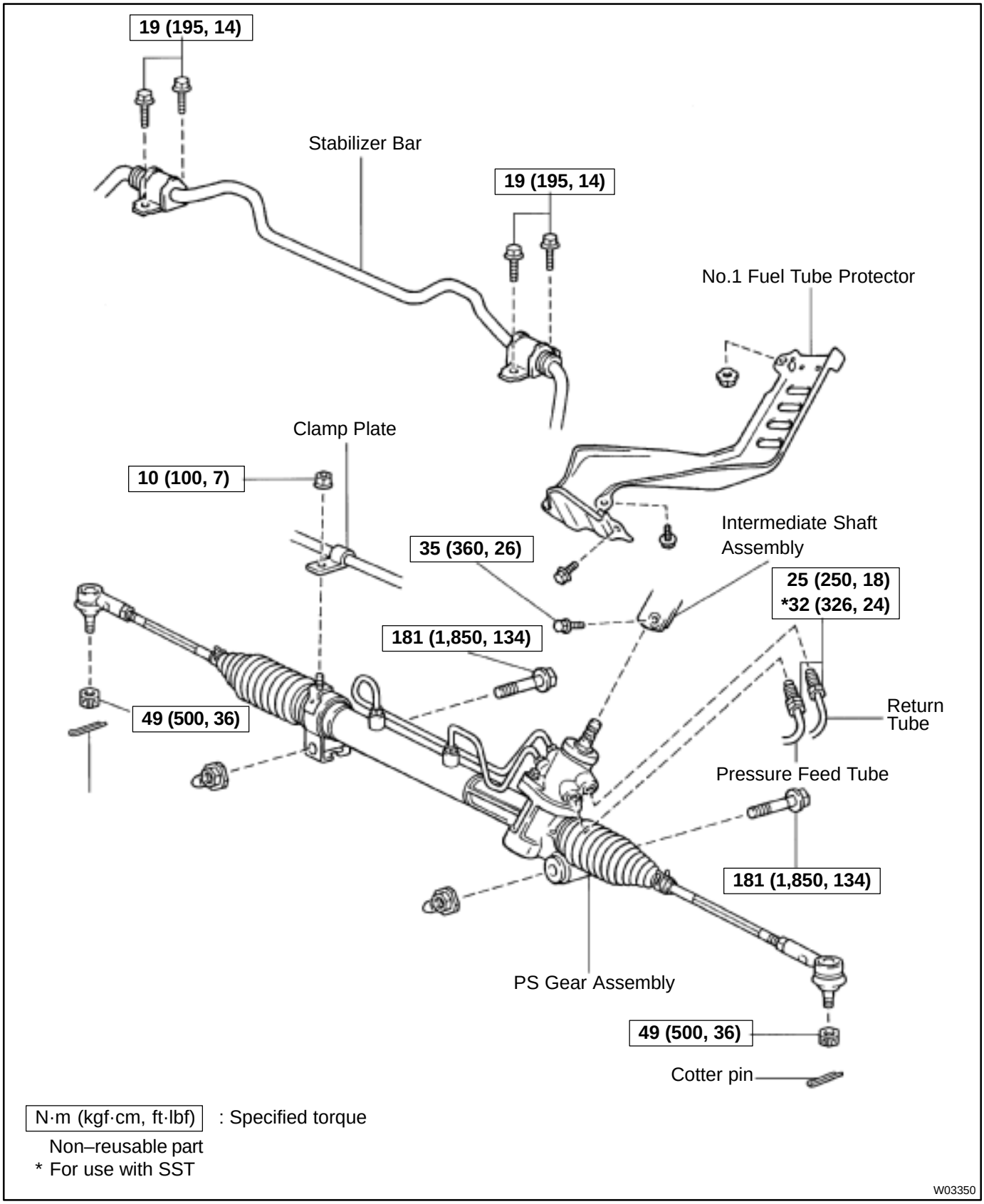

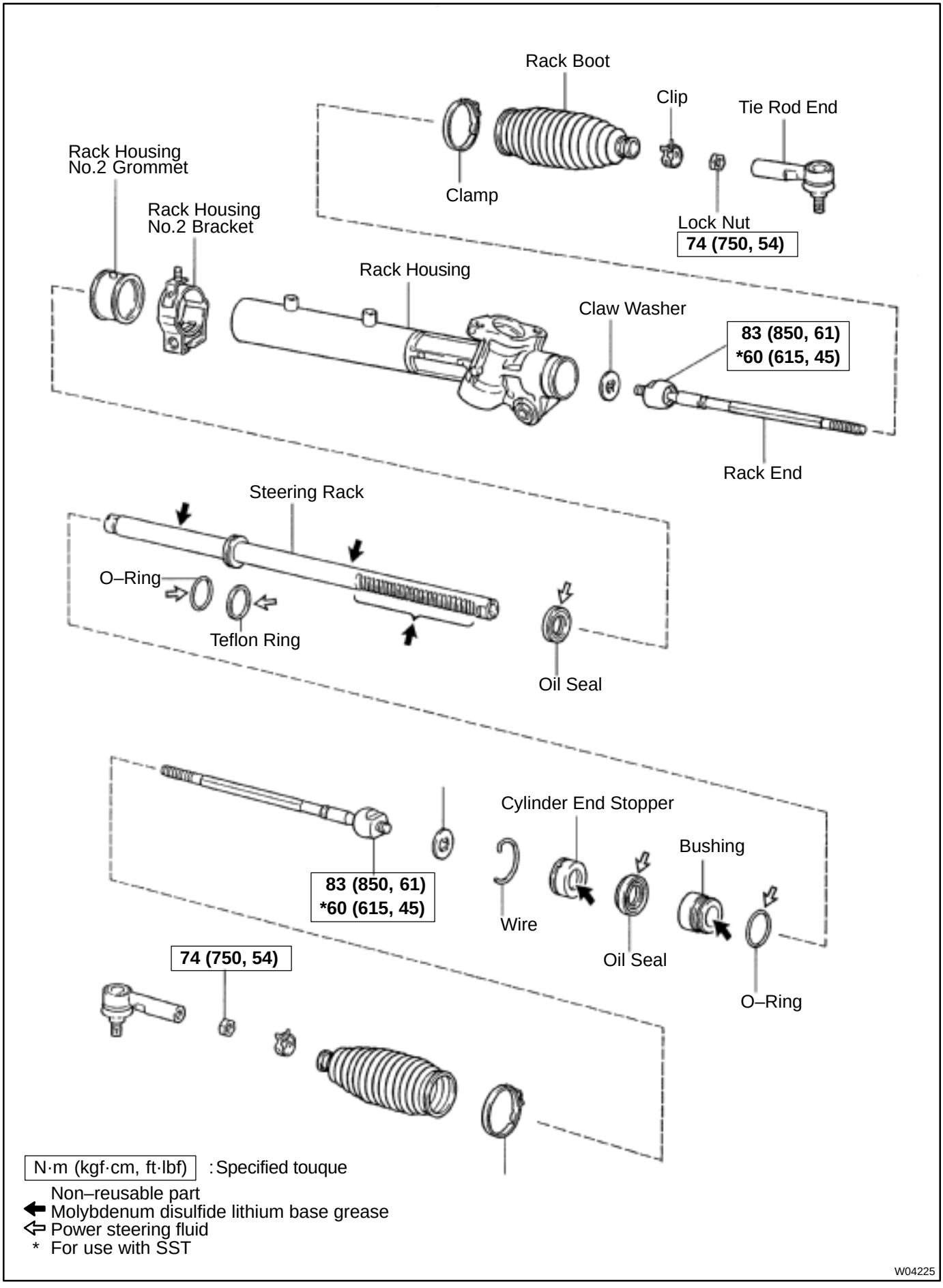
Rack Boot
Clip
Tie Rod End
Rack Housing
No.2 Grommet
Clamp
Rack Housing
No.2 Bracket
Lock Nut
74 (750, 54)
Rack Housing
Claw Washer
83 (850, 61)
*60 (615, 45)
Rack End
Steering Rack
O–Ring
Teflon Ring
Oil Seal
Cylinder End Stopper
Bushing
83 (850, 61)
*60 (615, 45)
Wire
Oil Seal
74 (750, 54)
O–Ring
N·m (kgf·cm, ft·lbf) : Specified touque
Non–reusable part
Molybdenum disulfide lithium base grease
Power steering fluid
* For use with SST
W04225

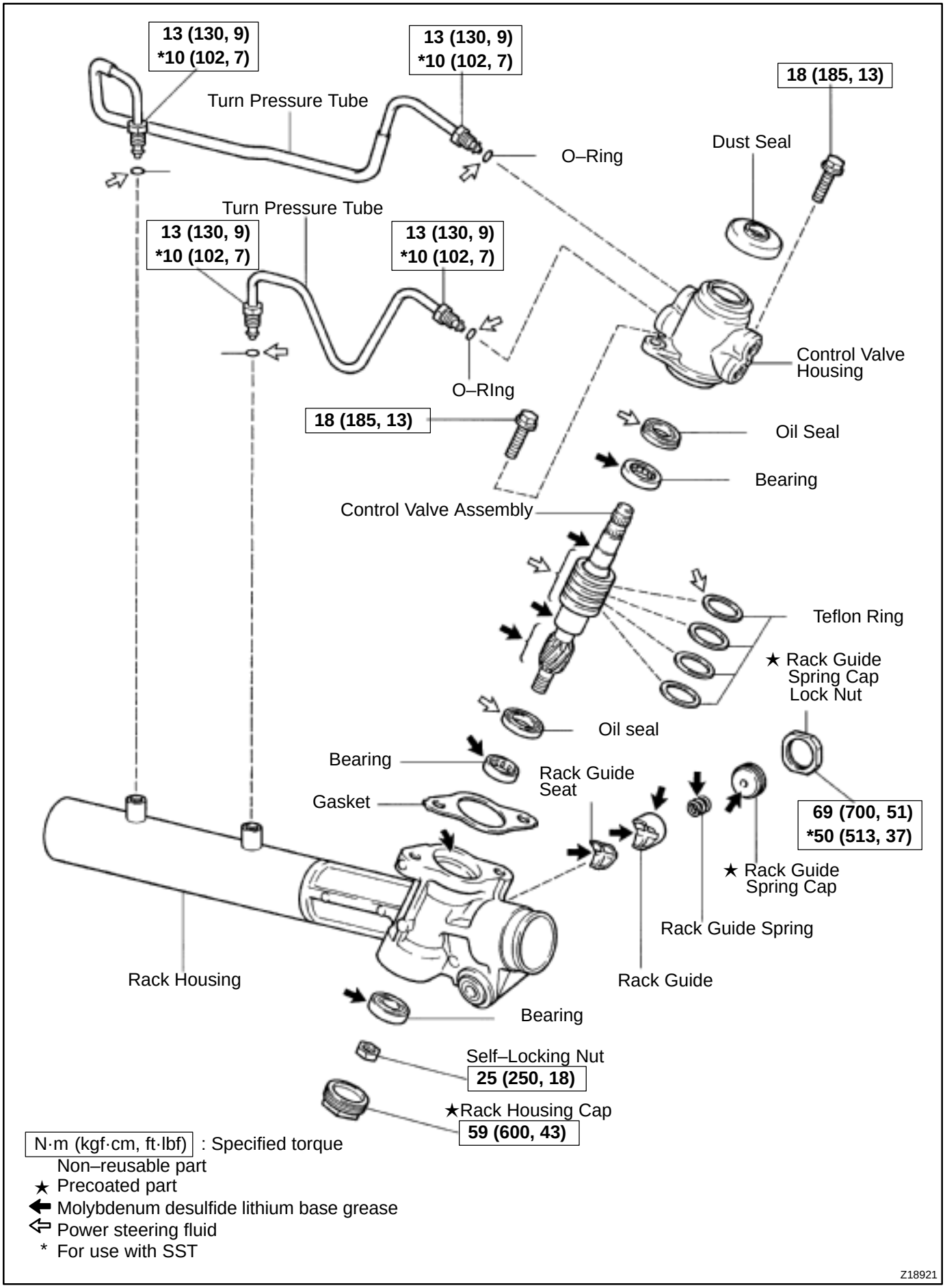

N·m (kgf·cm, ft·lbf) : Specified torque
Non–reusable part
★ Precoated part
⬅ Molybdenum desulfide lithium base grease
⇦ Power steering fluid
* For use with SST

Z18921

SR06U–01

REMOVAL

1. PLACE FRONT WHEELS FACING STRAIGHT AHEAD

2. REMOVE STEERING WHEEL PAD
(See page SR–11)

3. REMOVE STEERING WHEEL
(See page SR–11)

4. DISCONNECT RH AND LH TIE ROD ENDS
(See page SA–10)

5. DISCONNECT INTERMEDIATE SHAFT ASSEMBLY
(See page SR–11)

6. DISCONNECT CLAMP PLATE

Remove the nut.

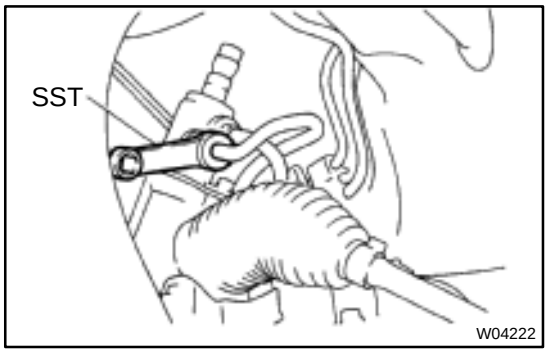

7. DISCONNECT PRESSURE FEED AND RETURN TUBES

Using SST, disconnect the tube.

SST 09631–22020

8. DISCONNECT STABILIZER BAR

Remove the 4 bolts.

HINT:

Do not remove the bar.

9. REMOVE NO.1 FUEL TUBE PROTECTOR

Remove the 2 bolts and nut.

10. REMOVE PS GEAR ASSEMBLY

(a) Remove the 2 gear assembly set bolts and nuts.

HINT:

Lift up the stabilizer bar and remove the bolts.

(b) Remove the gear assembly from the LH of the vehicle.

NOTICE:

Do not damage the turn pressure tubes.

SR06V–01

DISASSEMBLY

NOTICE:

When using a vise, do not overtighten it.

1. SECURE PS GEAR ASSEMBLY IN VISE

Using SST, secure the gear assembly in a vise.

SST 09612–00012

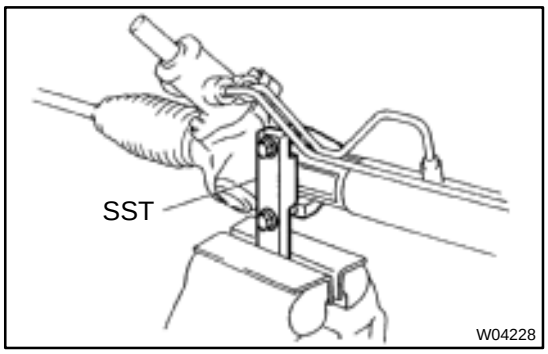

2. REMOVE 2 TURN PRESSURE TUBES

(a) Using SST, remove the tube.

SST 09633–00020

(b) Remove the 2 O–rings from the tube.

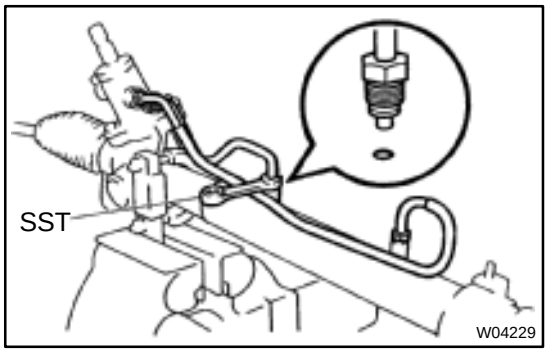

3. REMOVE RH AND LH TIE ROD ENDS AND LOCK NUTS

(a) Place matchmarks on the tie rod end and rack end.

(b) Loosen the lock nut.

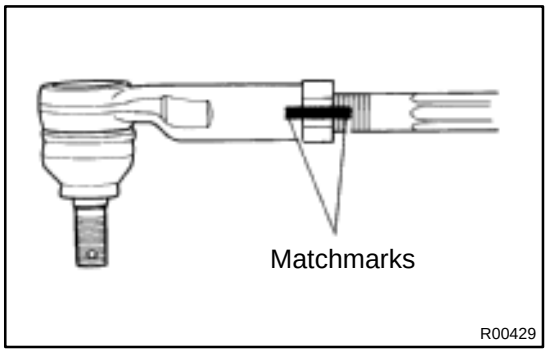

4. REMOVE RH AND LH CLIPS, RACK BOOTS AND CLAMPS

Using a screwdriver, loosen the clamp.

NOTICE:

★ **Be careful not to damage the boot.**

★ **Mark the RH and LH boots.**

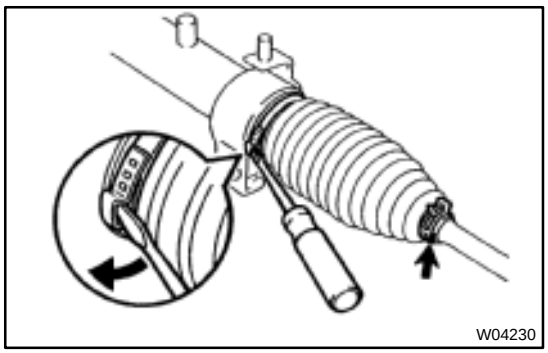

5. REMOVE RH AND LH RACK ENDS AND CLAW WASHERS

(a) Using a screwdriver and hammer, stake back the washer.

NOTICE:

Avoid any impact to the steering rack.

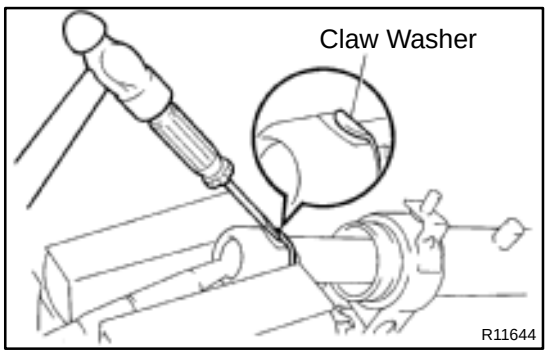

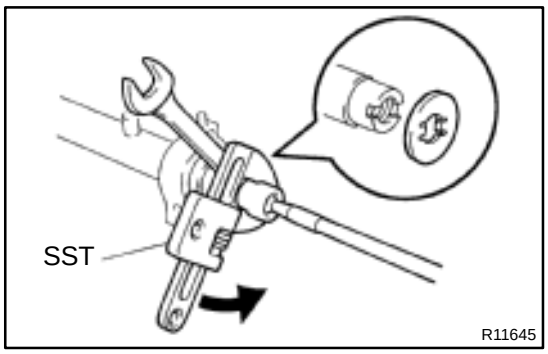

(b) Using a spanner (24 mm) to hold the steering rack steady, and using SST, remove the rack end.
SST 09922–10010

NOTICE:

★ **Use SST 09922–10010 in the direction shown in the illustration.**

★ **Mark the RH and LH rack ends.**

(c) Remove the washer from the rack end.

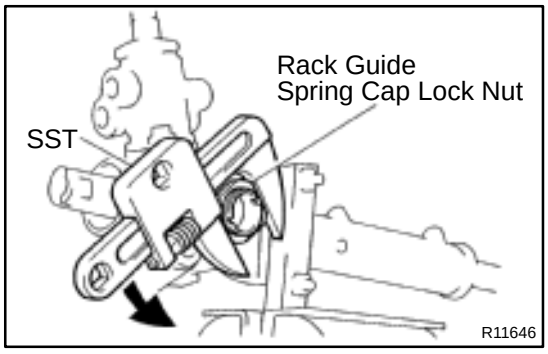

6. REMOVE RACK GUIDE SPRING CAP LOCK NUT

Using SST, remove the nut.
SST 09922–10010

NOTICE:

Use SST 09922–10010 in the direction shown in the illustration.

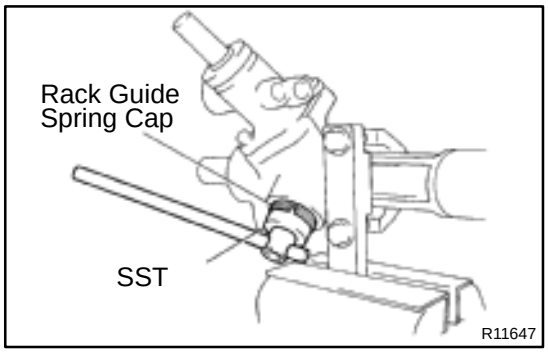

7. REMOVE RACK GUIDE SPRING CAP, RACK GUIDE SPRING, RACK GUIDE AND RACK GUIDE SEAT

(a) Using SST, remove the cap.
SST 09631–10021

(b) Remove the seat from the guide.

8. REMOVE RACK HOUSING CAP

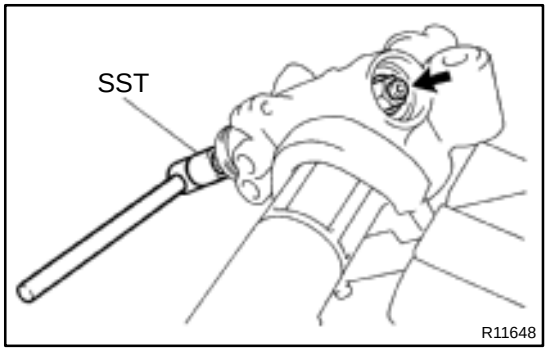

9. REMOVE SELF–LOCKING NUT

Using SST to stop the control valve shaft rotating, remove the nut.
SST 09616–00010

10. REMOVE DUST COVER

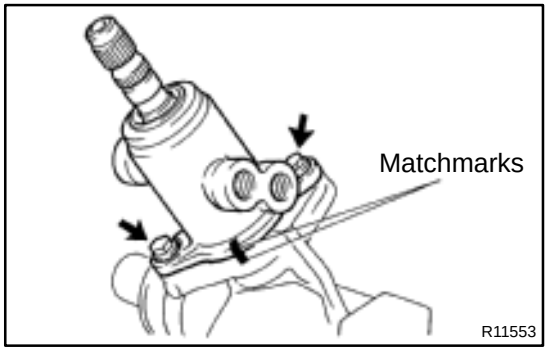

11. REMOVE CONTROL VALVE HOUSING WITH CONTROL VALVE ASSEMBLY

(a) Place matchmarks on the valve housing and rack housing.

(b) Remove the 2 bolts.

(c) Remove the gasket from the rack housing.

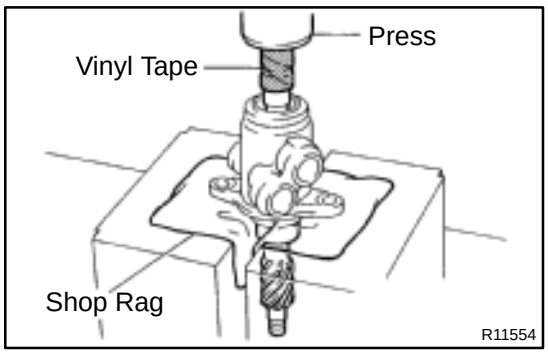

12. REMOVE CONTROL VALVE ASSEMBLY

(a) To prevent oil seal lip damage, wind vinyl tape on the serrated part of the valve shaft.

(b) Press out the valve assembly with the oil seal.

NOTICE:

- ★ **Place a shop rag between the valve housing and the blocks.**
- ★ **Be careful not to drop the valve assembly.**
- ★ **Be careful not to damage the oil seal lip.**

13. REMOVE OIL SEAL

Remove the oil seal from the control valve assembly.

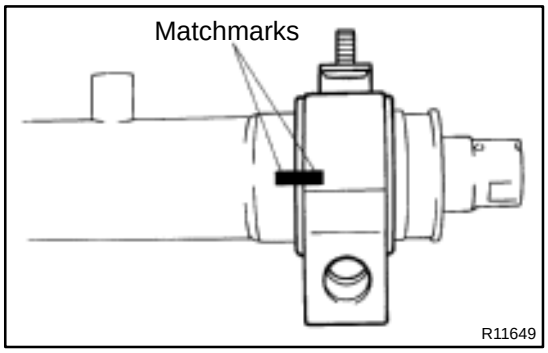

14. REMOVE RACK HOUSING NO.2 BRACKET AND GROMMET

(a) Place matchmarks on the bracket and rack housing.

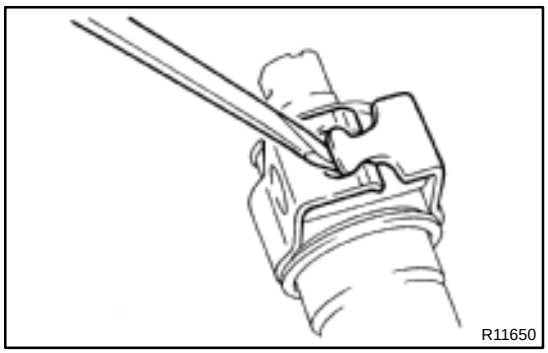

(b) Using a screwdriver, pry the clamp of the bracket.

(c) Remove the grommet from the bracket.

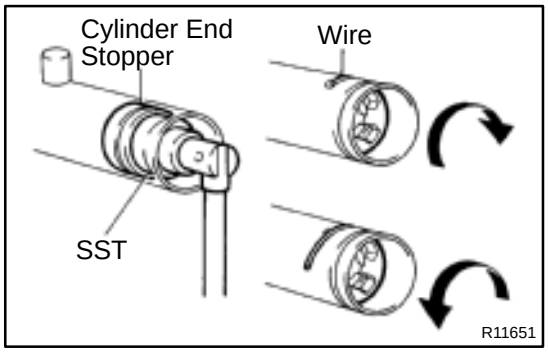

15. REMOVE CYLINDER END STOPPER

(a) Using SST, turn the stopper clockwise until the wire end is visible through the service hole.
SST 09631–10021

(b) Using SST, turn the stopper counterclockwise, and remove the wire.
SST 09631–10021

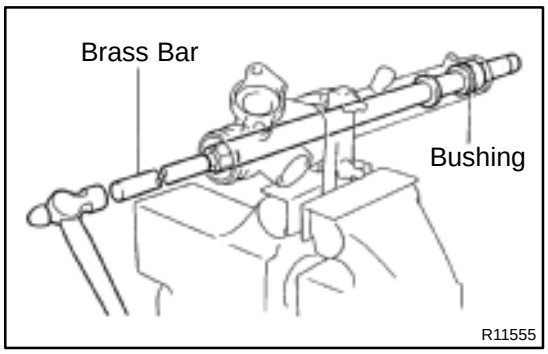

16. REMOVE STEERING RACK AND BUSHING

(a) Using a brass bar and hammer, tap out the rack with the bushing.

(b) Remove the bushing from the rack.

(c) Remove the O–ring from the bushing.

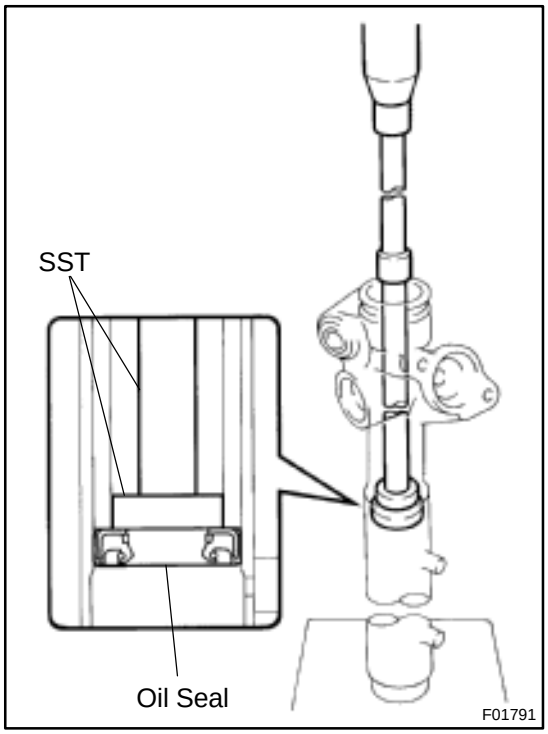

17. REMOVE OIL SEAL

Using SST, press out the oil seal.

SST 09950–60010 (09951–00290),
09950–70010 (09951–07360)

SR06W–01

INSPECTION

NOTICE:

When using a vise, do not overtighten it.

1. INSPECT STEERING RACK

(a) Using a dial indicator, check the rack for runout and for teeth wear and damage.

Maximum runout: 0.03 mm (0.0118 in.)

(b) Check the back surface for wear and damage.

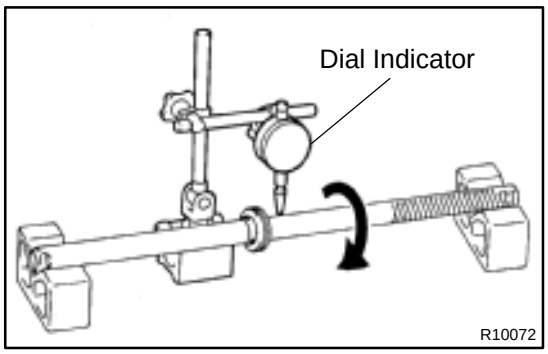

2. IF NECESSARY, REPLACE OIL SEAL AND BEARING

(a) Using SST, press out the oil seal and bearing from the control valve housing.

SST 09950–60010 (09951–00250), 09950–70010 (09951–07200)

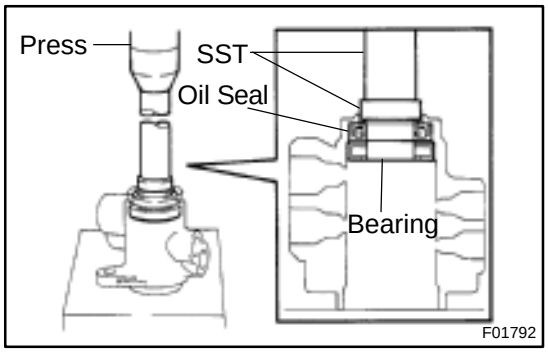

(b) Coat a new oil seal lip with power steering fluid.

(c) Using SST, press in the oil seal.

SST 09950–60010 (09951–00180, 09951–00320, 09952–06010), 09950–70010 (09951–07200)

NOTICE:

Make sure to install the oil seal facing the correct direction.

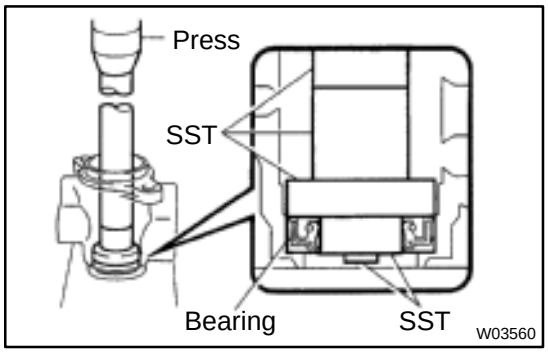

(d) Coat a new bearing with molybdenum disulfide lithium base grease.

(e) Using SST, press in the bearing.

SST 09950–60010 (09951–00340), 09950–70010 (09951–07200)

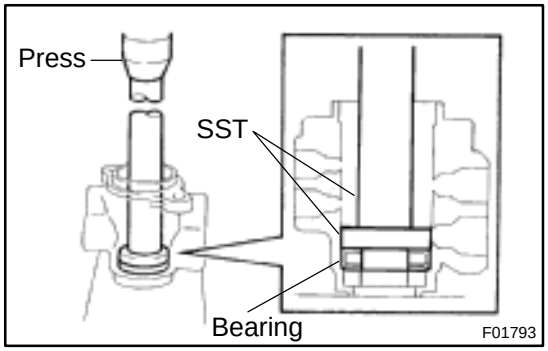

3. IF NECESSARY, REPLACE 2 BEARINGS

(a) Using a brass bar and hammer, tap out the bearing from the rack housing.

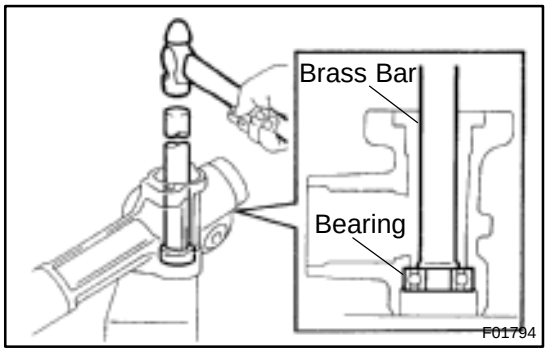

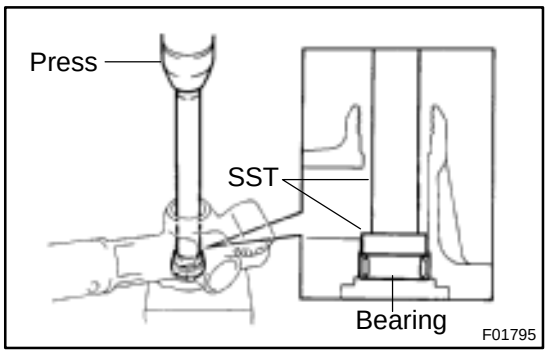

(b) Using SST, press out the bearing from the rack housing.
SST 09950–60010 (09951–00260),
09950–70010 (09951–07200)

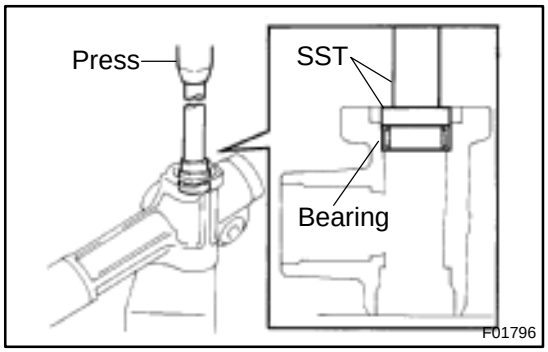

(c) Coat a new bearing with molybdenum disulfide lithium base grease.
(d) Using SST, press in the bearing.
SST 09950–60010 (09951–00310),
09950–70010 (09951–07200)

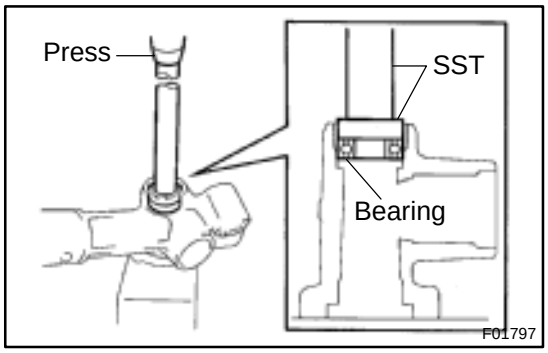

(e) Coat a new bearing with molybdenum disulfide lithium base grease.
(f) Using SST, press in the bearing.
SST 09950–60010 (09951–00320),
09950–70010 (09951–07200)

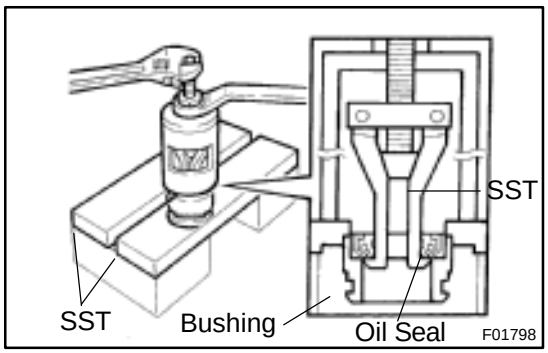

4. IF NECESSARY, REPLACE OIL SEAL

(a) Using SST, remove the oil seal from the bushing.
SST 09527–20011, 09612–24014 (09613–22011)

NOTICE:
Be careful not to damage the bushing.

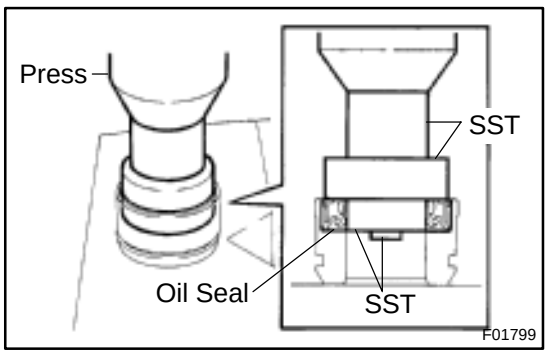

(b) Coat a new oil seal lip with power steering fluid.
(c) Using SST, press in the oil seal.
SST 09950–60010 (09951–00240, 09951–00400, 09952–06010)

NOTICE:
Make sure to install the oil seal facing the correct direction.

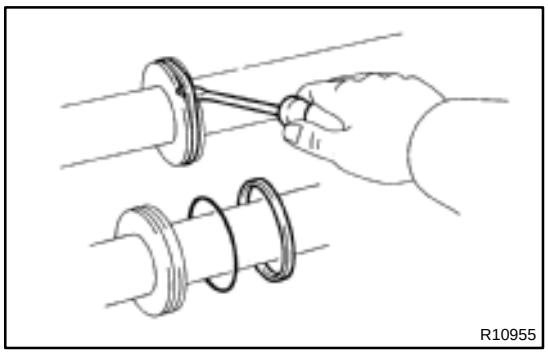

5. IF NECESSARY, REPLACE TEFLON RING AND O–RING

(a) Using a screwdriver, remove the teflon ring and O–ring from the steering rack.

NOTICE:

Be careful not to damage the groove for the teflon ring.

(b) Coat a new O–ring with power steering fluid and install it.

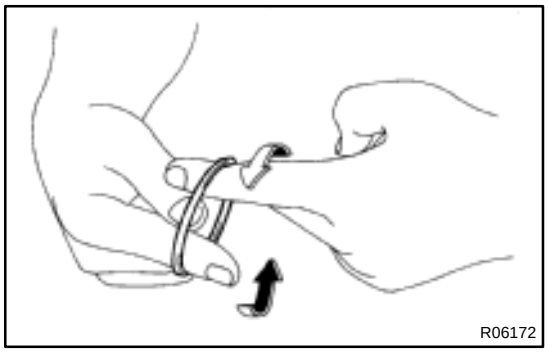

(c) Expand a new teflon ring with your fingers.

NOTICE:

Be careful not to over–expand the ring.

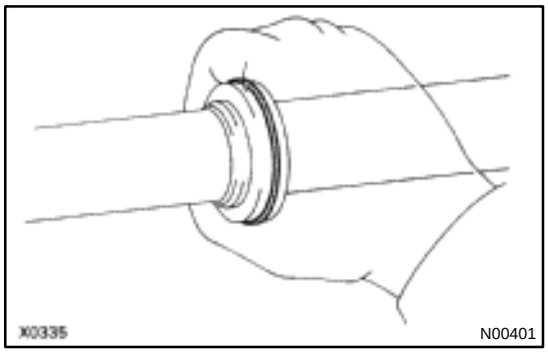

(d) Coat the ring with power steering fluid.

(e) Install the ring to the steering rack, and settle it down with your fingers.

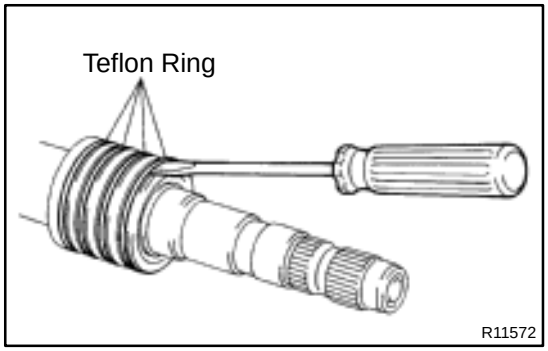

6. IF NECESSARY, REPLACE TEFLON RINGS

(a) Using a screwdriver, remove the 4 rings from the control valve assembly.

NOTICE:

Be careful not to damage the grooves for the teflon ring.

(b) Expand 4 new teflon rings with your fingers.

NOTICE:

Be careful not to over–expand the teflon ring.

(c) Coat the rings with power steering fluid.

(d) Install the rings to the control valve assembly, and settle them down with your fingers.

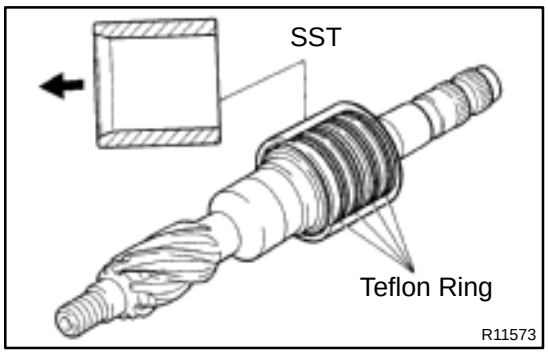

(e) Carefully slide the tapered end of SST over the rings until the rings fit to the steering rack.
SST 09631–20081

NOTICE:
Be careful not to damage the rings.

SR06X–01

REASSEMBLY

NOTICE:

When using a vise, do not overtighten it.

1. COAT WITH POWER STEERING FLUID OR MOLYBDENUM DISULFIDE LITHIUM BASE GREASE
(See pages SR–31)

2. INSTALL OIL SEAL

(a) Coat a new oil seal lip with power steering fluid.

(b) Using SST, press in the oil seal.
SST 09950–60010 (09951–00240, 09951–00430, 09952–06010), 09950–70010 (09951–07360)

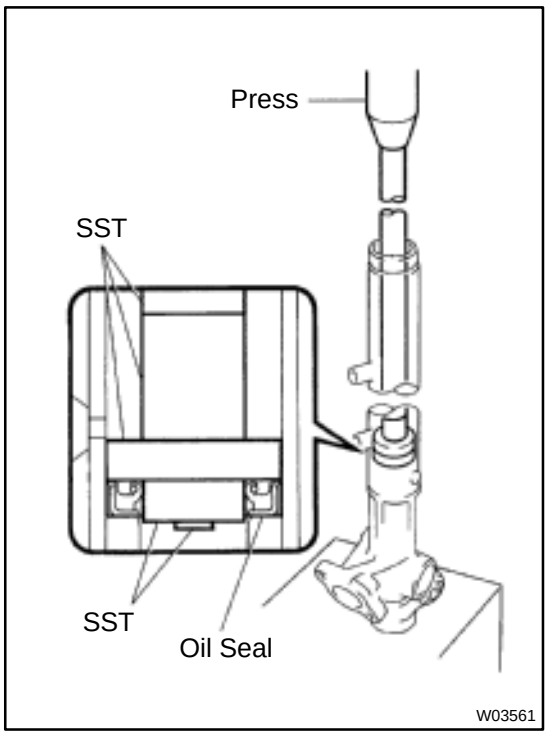

NOTICE:

★ **Make sure to install the oil seal facing the correct direction.**

★ **Take care that the oil seal does not get reversed as you install it.**

3. INSTALL STEERING RACK

(a) Install SST to the rack.
SST 09631–33010

HINT:

If necessary, scrape the burrs off the rack teeth end and burnish.

(b) Coat the SST with power steering fluid.

(c) Install the rack into the rack housing.

NOTICE:

Be careful not to damage the oil seal lip.

(d) Remove SST.

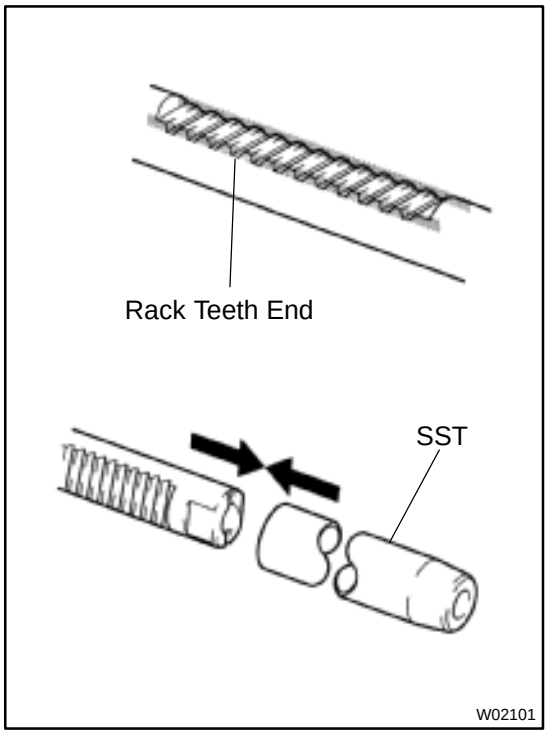

4. INSTALL BUSHING

(a) Coat a new O–ring with power steering fluid and install it to the bushing.

(b) To prevent oil seal lip damage, wind vinyl tape on the steering rack end, and apply power steering fluid.

(c) Install the bushing.

NOTICE:

★ **Make sure to install the bushing facing the correct direction.**

★ **Be careful not to damage the oil seal lip.**

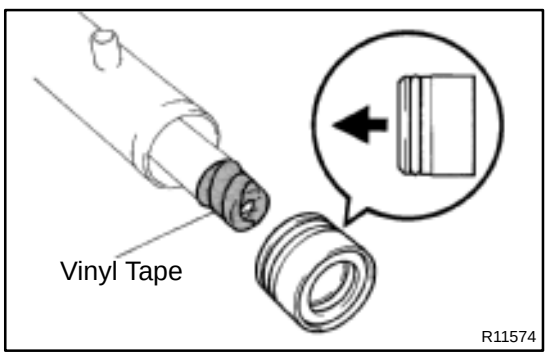

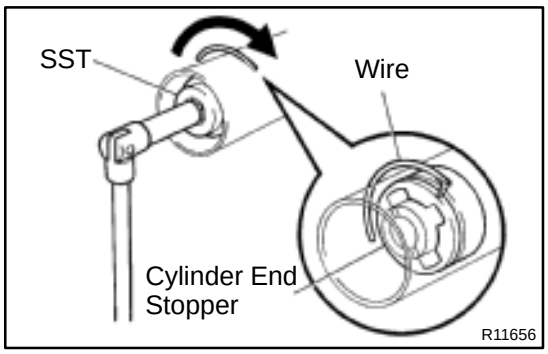

5. INSTALL CYLINDER END STOPPER

(a) Align the installation hole for the wire of the stopper with the slot of the rack housing.
(b) Install a new wire into the stopper.
(c) Using SST, turn the stopper clockwise 450 ± 50°.
SST 09631–10021

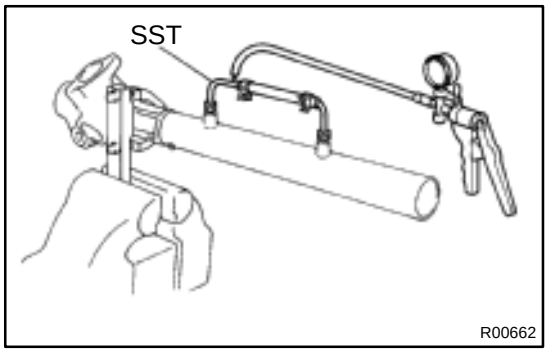

6. AIR TIGHTNESS TEST

(a) Install SST to the rack housing.
SST 09631–12071
(b) Apply 53 kPa (400 mmHg, 15.75 in.Hg) of vacuum for about 30 seconds.
(c) Check that there is no change in the vacuum.

If there is change in the vacuum, check the installation of the oil seals.

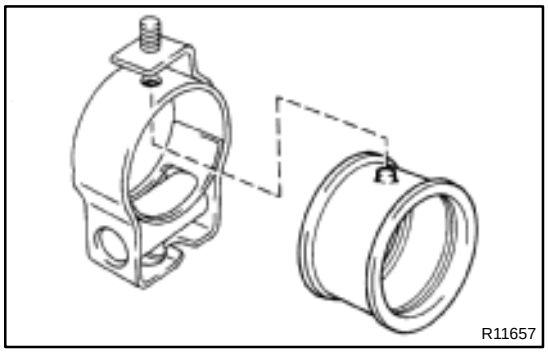

7. INSTALL RACK HOUSING NO.2 BRACKET AND GROMMET

(a) Install the grommet to the bracket.

HINT:
Align the projection of the grommet with the hole of the bracket.

(b) Align the matchmarks on the bracket and rack housing.

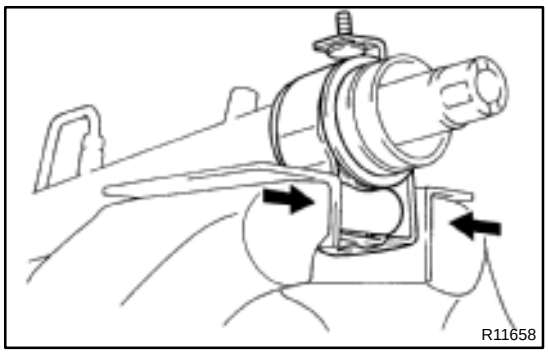

(c) Place the bracket in a vise and tighten the vise to fasten the clamp.

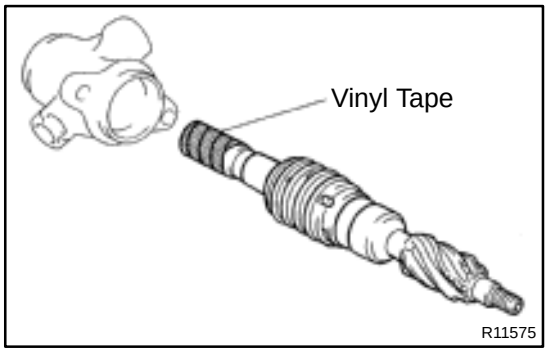

8. INSTALL CONTROL VALVE ASSEMBLY

(a) To prevent oil seal lip damage, wind vinyl tape on the serrated part of the valve shaft.
(b) Coat the teflon rings with power steering fluid.
(c) Install the valve assembly into the valve housing.

NOTICE:
Be careful not to damage the teflon rings and oil seal.

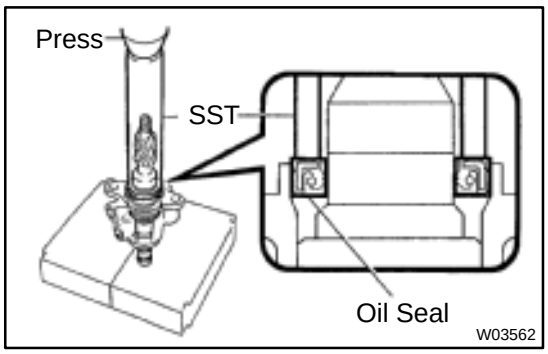

9. INSTALL OIL SEAL

(a) Coat a new oil seal lip with power steering fluid.

(b) Using SST, press in the oil seal.

SST 09612–22011

NOTICE:

Make sure to install the oil seal facing the correct direction.

10. INSTALL CONTROL VALVE HOUSING WITH CONTROL VALVE ASSEMBLY

(a) Place a new gasket on the rack housing.

(b) Align the matchmarks on the valve housing and rack housing.

(c) Torque the 2 bolts.

Torque: 18 N·m (185 kgf·cm, 13 ft·lbf)

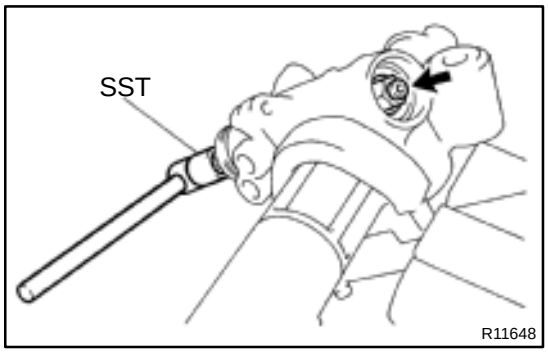

11. INSTALL SELF–LOCKING NUT

Using SST to stop the control valve shaft rotating, torque a new nut.

SST 09616–00010

Torque: 25 N·m (250 kgf·cm, 18 ft·lbf)

12. INSTALL DUST COVER

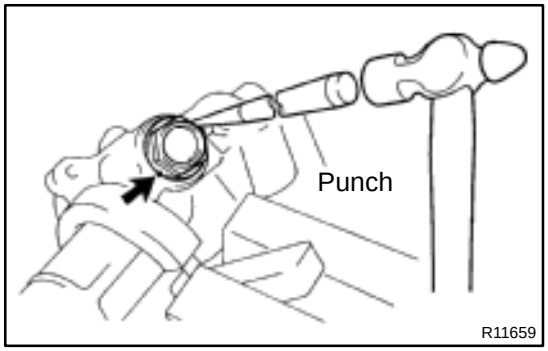

13. INSTALL RACK HOUSING CAP

(a) Apply sealant to 2 or 3 threads of the cap.

Sealant:
Part No.08833–00080, THREE BOND 1344,
LOCTITE 242 or equivalent

(b) Torque the cap.

Torque: 59 N·m (600 kgf·cm, 43 ft·lbf)

(c) Using a punch and hammer, stake the 2 parts of the cap.

14. INSTALL RACK GUIDE SEAT, RACK GUIDE, RACK GUIDE SPRING AND RACK GUIDE SPRING CAP

(a) Install the seat to the guide.

(b) Apply sealant to 2 or 3 threads of the cap.

Sealant:
Part No.08833–00080, THREE BOND 1344,
LOCTITE 242 or equivalent

(c) Temporarily install the cap.

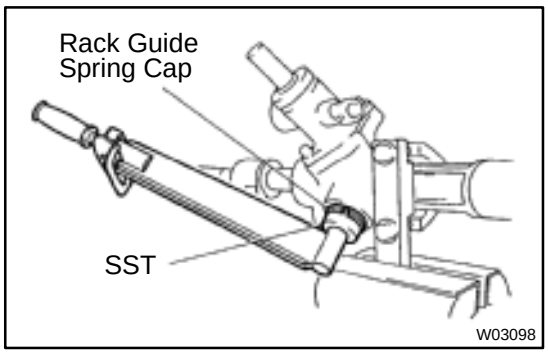

15. ADJUST TOTAL PRELOAD

(a) To prevent the steering rack teeth from damaging the oil seal lip, temporarily install the RH and LH rack ends.

(b) Using SST, torque the rack guide spring cap.
SST 09631–10021
Torque: 25 N·m (250 kgf·cm, 18 ft·lbf)

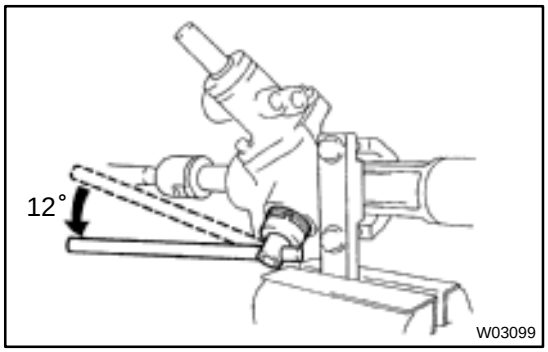

(c) Using SST, return the cap 12°.
SST 09631–10021

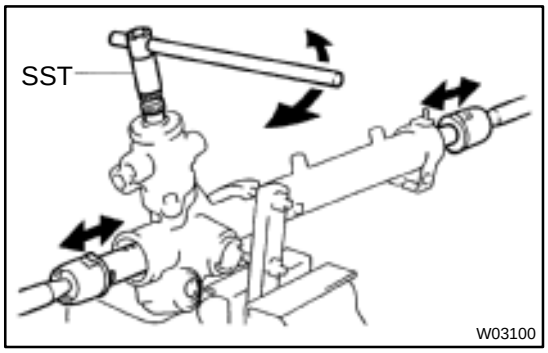

(d) Using SST, turn the control valve shaft right and left 1 or 2 times.
SST 09616–00010

(e) Using SST, loosen the cap until the rack guide spring is not functioning.
SST 09631–10021

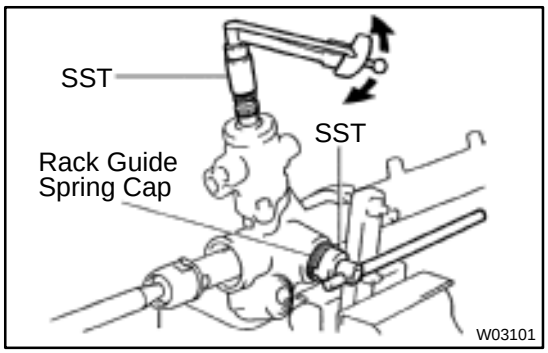

(f) Using SST and a torque wrench, tighten the cap until the preload is within specification.
SST 09616–00010, 09631–10021
Preload (turning):
0.8 – 1.4 N·m (8 – 14 kgf·cm, 6.9 – 12.2 in.·lbf)

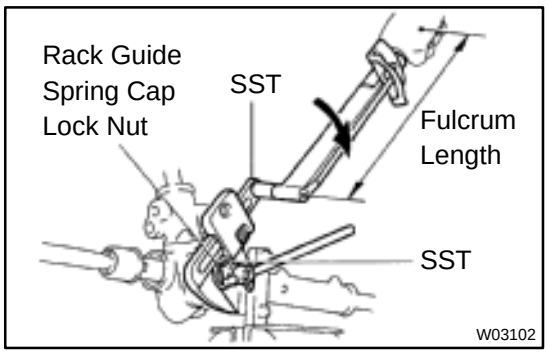

16. INSTALL RACK GUIDE SPRING CAP LOCK NUT

(a) Apply sealant to 2 or 3 threads of the nut.
Sealant:
Part No.08833–00080, THREE BOND 1344, LOCTITE 242 or equivalent

(b) Using SST to hold the rack guide spring cap, and using SST, torque the nut.
SST 09631–10021, 09922–10010
Torque: 50 N·m (513 kgf·cm, 37 ft·lbf)

NOTICE:
Use SST 09922–10010 in the direction shown in the illustration.

HINT:
Use a torque wrench with a fulcrum length of 345 mm (13.58 in.).

(c) Recheck the total preload.
Preload (turning):
0.8 – 1.4 N·m (8 – 14 kgf·cm, 6.9 – 12.2 in.·lbf)

(d) Remove the RH and LH rack ends.

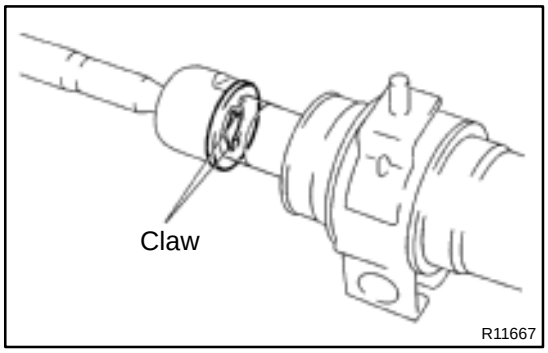

17. INSTALL RH AND LH CLAW WASHERS AND RACK ENDS

(a) Install a new claw washer, and temporarily install the rack end.

HINT:
Align the claws of the washer with the steering rack grooves.

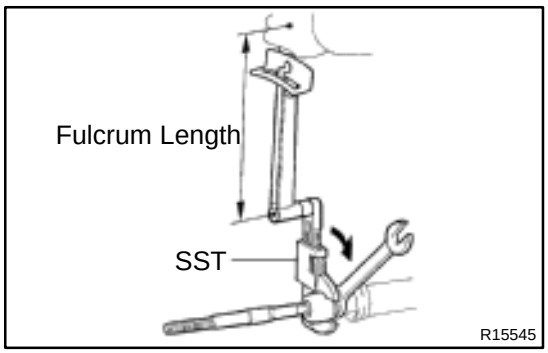

(b) Using a spanner (24 mm) to hold the steering rack steady, and using SST, torque the rack end.
SST 09922–10010
Torque: 60 N·m (615 kgf·cm, 45 ft·lbf)

NOTICE:
Use SST 09922–10010 in the direction shown in the illustration.

HINT:
Use a torque wrench with a fulcrum length of 345 mm (13.58 in.).

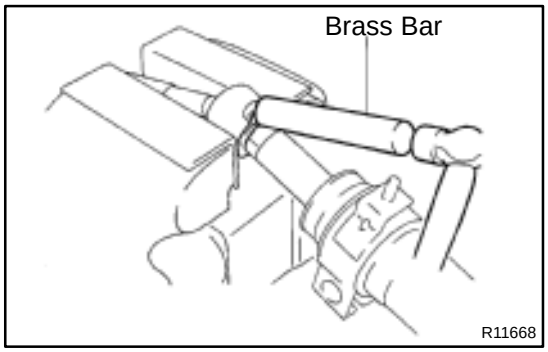

(c) Using a brass bar and hammer, stake the washer.

NOTICE:
Avoid any impact to the rack.

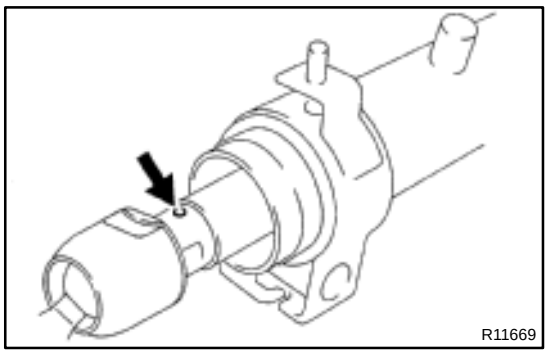

18. INSTALL RH AND LH RACK BOOTS, CLAMPS AND CLIPS

(a) Ensure that the steering rack hole is not clogged with grease.

HINT:

If the hole is clogged, the pressure inside the boot will change after it is assembled and the steering wheel is turned.

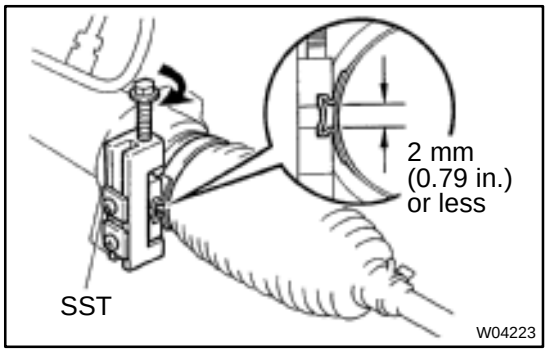

(b) Install the boot.

NOTICE:

Be careful not to damage or twist the boot.

(c) Using SST, tighten the clamp as shown in the illustration.
SST 09521–24010

19. INSTALL RH AND LH TIE ROD ENDS AND LOCK NUTS

(a) Screw the lock nut and tie rod end onto the rack end until the matchmarks are aligned.

(b) After adjusting toe–in, torque the nut.
(See page SA–4)
Torque: 74 N·m (750 kgf·cm, 54 ft·lbf)

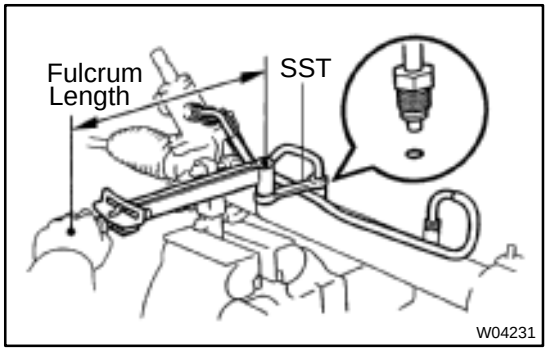

20. INSTALL 2 TURN PRESSURE TUBES

(a) Coat 2 new O–rings with power steering fluid and install them to the tube.

(b) Using SST, install the tube.
SST 09633–00020
Torque: 10 N·m (102 kgf·cm, 7 ft·lbf)

HINT:

★ Use a torque wrench with a fulcrum length of 250 mm (9.84 in.).

★ This torque value is effective in case that SST is parallel to a torque wrench.

SR06Y–01

INSTALLATION

1. INSTALL PS GEAR ASSEMBLY

(a) Install the gear assembly from the LH of the vehicle.

NOTICE:

Do not damage the turn pressure tubes.

(b) Torque the 2 gear assembly set bolts and nuts.

Torque: 181 N·m (1,850 kgf·cm, 134 ft·lbf)

HINT:

Lift up the stabilizer bar and install the bolts.

2. INSTALL NO.1 FUEL TUBE PROTECTOR

Install the 2 bolts and nut.

3. CONNECT STABILIZER BAR

Torque the 4 bolts.

Torque: 19 N·m (195 kgf·cm, 14 ft·lbf)

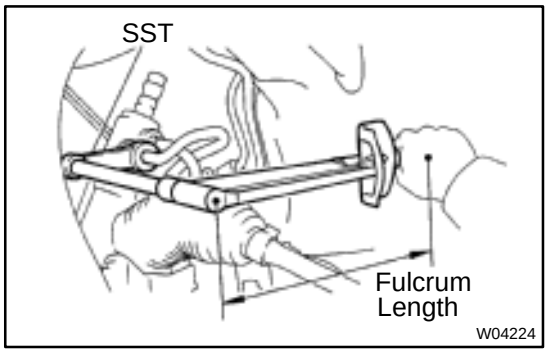

4. CONNECT PRESSURE FEED AND RETURN TUBES

Using SST, connect the tube.

SST 09631–22020

Torque: 32 N·m (326 kgf·cm, 24 ft·lbf)

HINT:

★ Use a torque wrench with a fulcrum length of 300 mm (11.81 in.).

★ This torque value is effective in case that SST is parallel to a torque wrench.

5. CONNECT CLAMP PLATE

Torque the nut.

Torque: 10 N·m (100 kgf·cm, 7 ft·lbf)

6. CONNECT INTERMEDIATE SHAFT ASSEMBLY

(See page SR–16)

7. CONNECT RH AND LH TIE ROD ENDS

(See page SA–10)

8. POSITION FRONT WHEELS FACING STRAIGHT AHEAD

HINT:

Do it with the front of the vehicle jacked up.

9. CENTER SPIRAL CABLE

(See page SR–16)

10. INSTALL STEERING WHEEL

(a) Install the wheel at straight–ahead position.

(b) Temporarily tighten the wheel set nut.

(c) Connect the connector.

11. BLEED POWER STEERING SYSTEM

(See page SR–4)

12. CHECK STEERING WHEEL CENTER POINT

13. **TORQUE STEERING WHEEL SET NUT**
    Torque: 35 N·m (360 kgf·cm, 26 ft·lbf)
14. **INSTALL STEERING WHEEL PAD**
    (See page SR–16)
15. **CHECK FRONT WHEEL ALIGNMENT**
    (See page SA–4)

TROUBLESHOOTING

SA077–01

PROBLEM SYMPTOMS TABLE

Use the table below to help you find the cause of the problem. The numbers indicate the priority of the likely cause of the problem. Check each part in order. If necessary, replace these parts.

Symptom	Suspect Area	See page
Wander/pulls	1. Tire (Worn or improperly inflated)	SA–2
	2. Wheel alignment (Incorrect)	SA–4 SA–7
	3. Steering linkage (Loosen or worn)	–
	4. Hub bearings (Worn)	SA–10
	5. Suspension parts (Worn)	–
	6. Steering gear (Out of adjustment or broken)	–
Bottoming	1. Vehicle (Overloaded)	–
	2. Spring (Weak)	SA–33 SA–56
	3. Shock absorber (Worn)	SA–33 SA–56
Sways/pitches	1. Tire (Worn or improperly inflated)	SA–2
	2. Stabilizer bar (Bent or broken)	SA–47 SA–69
	3. Shock absorber (Worn)	SA–33 SA–56
Front wheel shimmy	1. Tire (Worn or improperly inflated)	SA–2
	2. Wheels (Out of balance)	SA–2
	3. Shock absorber (Worn)	SA–33 SA–56
	4. Wheel alignment (Incorrect)	SA–4 SA–7
	5. Ball joints (Worn)	SA–43
	6. Hub bearings (Worn)	SA–10
	7. Steering linkage (Loosen or worn)	–
	8. Steering gear (Out of adjustment or broken)	–
Abnormal tire wear	1. Tire (Worn or improperly inflated)	SA–2
	2. Wheels (Out of balance)	SA–2
	3. Suspension parts (Worn)	–
	4. Shock absorber (Worn)	SA–33 SA–56

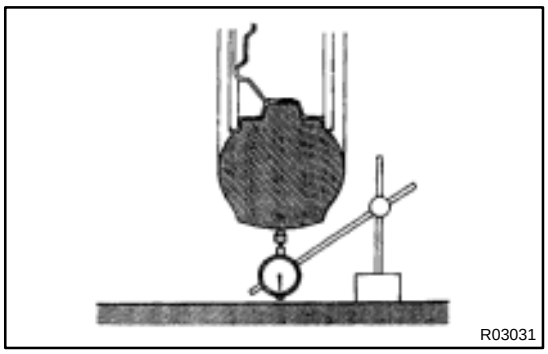
R03031

TIRE AND WHEEL

SA078–01

INSPECTION

1. INSPECT TIRE

(a) Check the tires for wear and proper inflation pressure.

Cold inflation pressure:

Normal driving

Tire size	Front, Rear kPa (kgf/cm^2 or bar, psi)
P195/70R14 90S, 90H	210 (2.1, 30)
P205/65R15 92H	*1 220 (2.2, 32) *2 200 (2.0, 29)

*1: For all loads including full rated loads

*2: For reduced loads (1 to 4 passengers)

Trailer towing

Tire size	Front, Rear kPa (kgf/cm^2 or bar, psi)
P195/70R14 90S	*1 210 (2.1, 30) *2 240 (2.4, 36)
P205/65R15 92H	*1 220 (2.2, 32) *2 240 (2.4, 36)

*1: For driving under 160 km/h (100 mph)

*2: For driving at 160 km/h (100 mph) or over

(b) Check the tire runout.

Tire runout: 1.0 mm (0.039 in.) or less

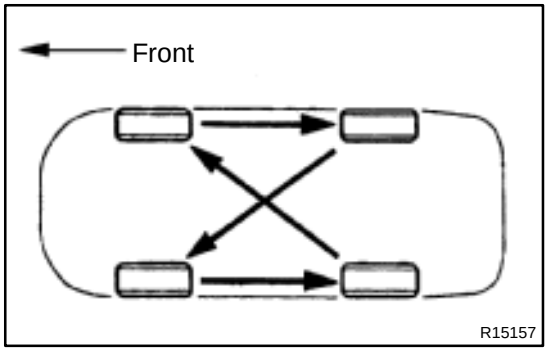

R15157

2. ROTATING TIRES

HINT:

See the illustration for where to rotate each tire.

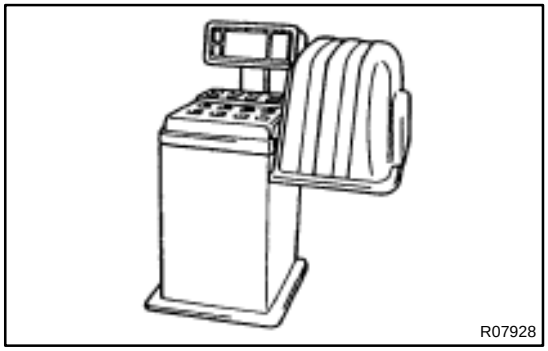
R07928

3. INSPECT WHEEL BALANCE

(a) Check and adjust the Off–the–car balance.

(b) If necessary, check and adjust the On–the–car balance.

Imbalance after adjustment:

8.0 g (0.018 lb) or less

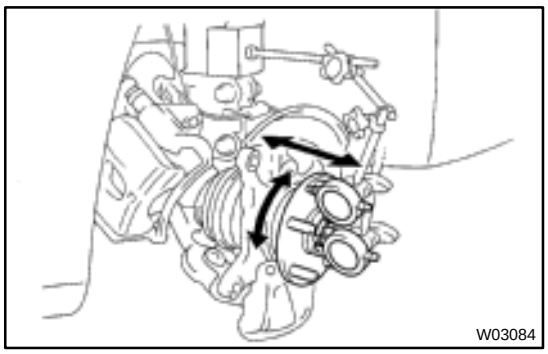

4. CHECK WHEEL BEARING LOOSENESS

(a) Check the backlash in the bearing shaft direction.
Maximum: 0.05 mm (0.0020 in.)

(b) Check the axle hub deviation.
Maximum: 0.05 mm (0.0020 in.)

5. CHECK FRONT SUSPENSION FOR LOOSENESS

6. CHECK STEERING LINKAGE FOR LOOSENESS

7. CHECK BALL JOINT FOR LOOSENESS

8. CHECK SHOCK ABSORBER WORKS PROPERLY

- Check for oil leaks
- Check mounting bushings for wear
- Check front and rear of the vehicle for bounce

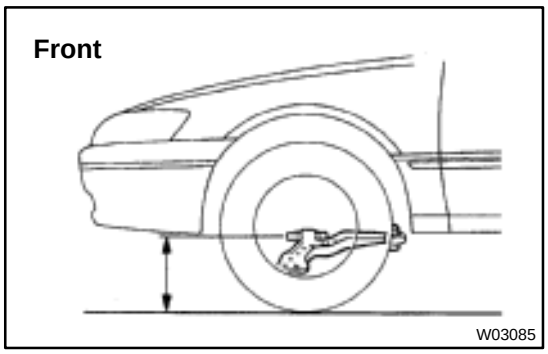

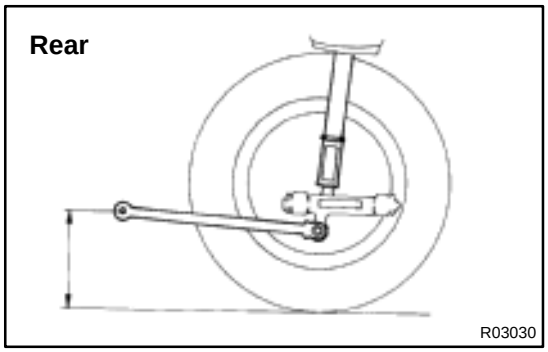

FRONT WHEEL ALIGNMENT

SA079–01

INSPECTION

1. MEASURE VEHICLE HEIGHT

Tire size	Front*1 mm (in.)	Rear*2 mm (in.)
195/70R14	212 (8.35)	264 (10.39)
205/65R15	215 (8.46)	266 (10.49)

***1: Front measuring point**

Measure from the ground to the center of the front side lower suspension arm mounting bolt.

***2: Rear measuring point**

Measure from the ground to the center of the strut rod mounting bolt.

NOTICE:

Before inspecting the wheel alignment, adjust the vehicle height to the specification.

If the vehicle height is not within the specification, try to adjust it by pushing down on or lifting the body.

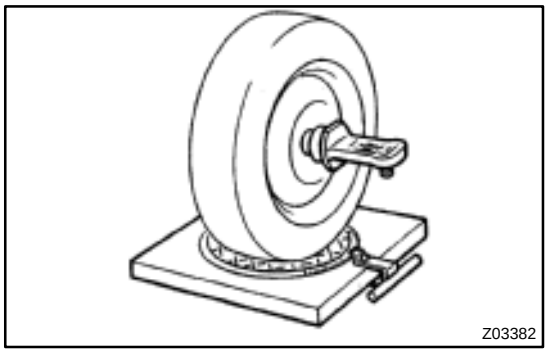

2. INSTALL CAMBER–CASTER–KINGPIN GAUGE ONTO VEHICLE OR POSITION VEHICLE ON WHEEL ALIGNMENT TESTER

Follow the specific instructions of the equipment manufacturer.

3. INSPECT CAMBER, CASTER AND STEERING AXIS INCLINATION

	5S–FE	1MZ–FE
Camber	–0°36' ± 45'	–0°37' ± 45'
	(–0.6° ± 0.75°)	(–0.62° ± 0.75°)
Left–right error	45' (0.75°) or less	45' (0.75°) or less
Caster	2°10' ± 45'	2°11' ± 45'
	(2.17° ± 0.75°)	(2.18° ± 0.75°)
Left–right error	45' (0.75°) or less	45' (0.75°) or less
Steering axis inclination	13°01' ± 45'	13°04' ± 45'
	(13.02° ± 0.75°)	(13.07° ± 0.75°)
Left–right error	45' (0.75°) or less	45' (0.75°) or less

HINT:

If the caster and steering axis inclination are not within the specification, after the camber has correctly adjusted, recheck the suspension parts for damaged and/or worn out parts.

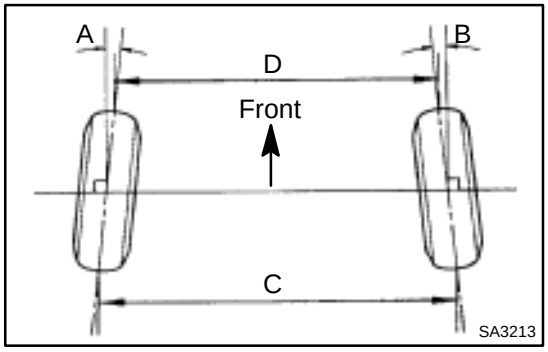

4. INSPECT TOE–IN

Toe–in (Total)	A + B: 0° ± 12' (0° ± 0.2°) C – D: 0 ± 2 mm (0 ± 0.08 in.)

If the toe–in is not within the specification, adjust it at the rack ends.

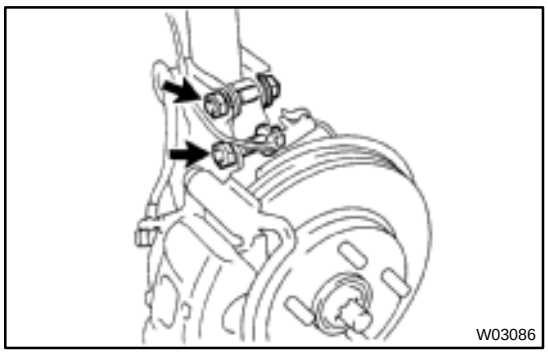
W03086

5. ADJUST CAMBER

NOTICE:

After the camber has been adjusted, inspect the toe–in.

(a) Remove the front wheels and speed sensor clamp.

(b) Remove the 2 nuts on the lower side of the shock absorber.

(c) Coat the threads of the nuts with engine oil.

(d) Temporarily install the 2 nuts.

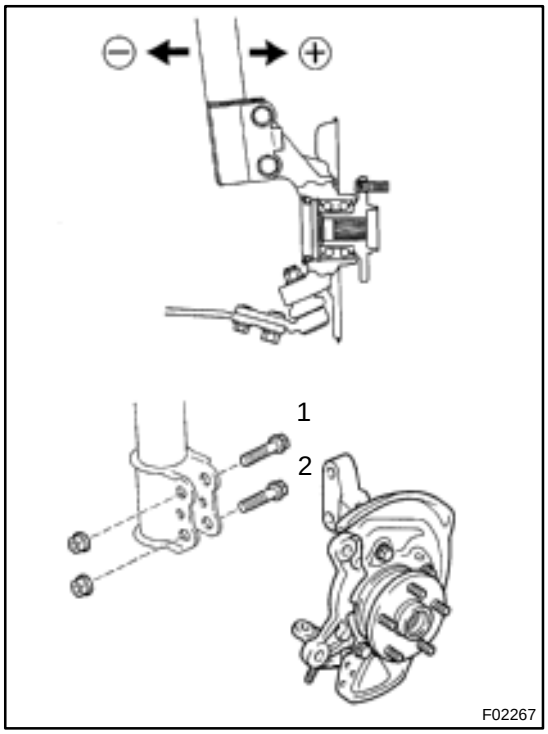

F02267

(e) Adjust the camber by pushing or pulling the lower side of the shock absorber in the direction in which the camber adjustment is required.

(f) Tighten the nuts.

Torque: 211 N·m (2,150 kgf·cm, 156 ft·lbf)

(g) Install the front wheels.

Torque: 103 N·m (1,050 kgf·cm, 76 ft·lbf)

(h) Check the camber.

HINT:

- Try to adjust the camber to the center value.
- Adjusting value for the set bolts is 6’ – 30’ (0.1˚ – 0.5˚).

If the camber is not within the specification, using the table below, estimate for how much additional camber adjustment will be required, and select the camber adjusting bolt.

Bolt / Adjusting Value	Set Bolt		Adjusting Bolt					
	90105–15001		90105–15004		90105–15005		90105–15006	
			1 Dot		2 Dots		3 Dots	
	1	2	1	2	1	2	1	2
15’	●			●				
30’	●					●		
45’	●							●
1˚00’			●					●
1˚15’					●			●
1˚30’							●	●

F01195

(i) Follow the above mentioned steps again. Between step (b) and (c), exchange 1 or 2 selected bolts.

HINT:

When exchanging the 2 bolts, exchange 1 bolt for each time.



6. ADJUST TOE–IN

(a) Remove the boot clamps.
(b) Loosen the tie rod end lock nuts.
(c) Turn the left and right rack ends an equal amount to adjust the toe–in.

HINT:

- Try to adjust the toe–in to the center value.
- Make sure that the length of the left and right rack ends is the same.

Rack end length difference:
1.5 mm (0.059 in.) or less

(d) Torque the tie rod end lock nuts.
Torque: 74 N·m (750 kgf·cm, 54 ft·lbf)
(e) Place the boot on the seat and install the clip it.

HINT:

Make sure that the boots are not twisted.

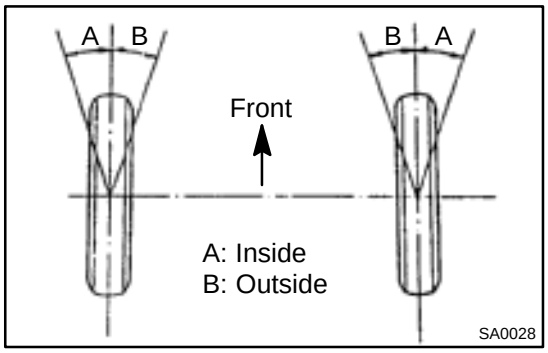

7. INSPECT WHEEL ANGLE

Turn the steering wheel fully, and measure the turning angle.

Tire size	Inside wheel	Outside wheel <Reference>
195/70R14	37˚12' ± 2˚ (37.2˚ ± 2˚)	32˚21' (32.45˚)
205/65R15	35˚47' ± 2˚ (35.78˚ ± 2˚)	31˚25' (31.42˚)

If the wheel angles differ from the specification, check the left and right rack end length.

REAR WHEEL ALIGNMENT

SA07A–01

INSPECTION

1. MEASURE VEHICLE HEIGHT

Vehicle height: See page SA–4

NOTICE:

Before inspecting the wheel alignment, adjust the vehicle height to specification.

2. INSTALL CAMBER – CASTER – KINGPIN GAUGE ONTO VEHICLE OR POSITION VEHICLE ON WHEEL ALIGNMENT TESTER

Follow the specific instructions on the equipment manufacturer.

3. INSPECT CAMBER

	5S–FE	1MZ–FE
Camber	–0°42' ± 45' (–0.7° ± 0.75°)	–0°45' ± 45' (–0.75° ± 0.75°)
Left–right error	45' (0.75°) or less	45' (0.75°) or less

HINT:

Camber in not adjustable, it measurement is not within the specifications, inspect the suspension parts for damaged and/or worn–out parts and replace them as necessary.

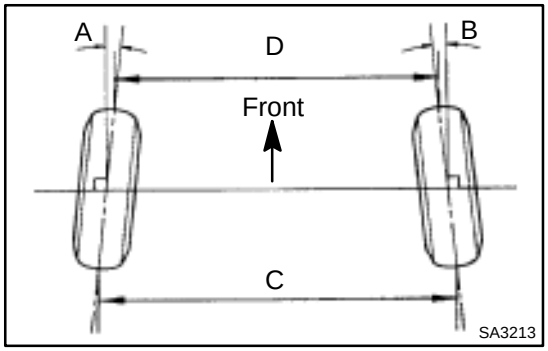

4. INSPECT TOE–IN

Toe–in (Total)	A + B: 0°24' ± 12' (0.4° ± 0.2°) C – D: 4 ± 2 mm (0.16 ± 0.08 in.)

If the toe–in is not within the specification, adjust it at the No.2 lower suspension arm.

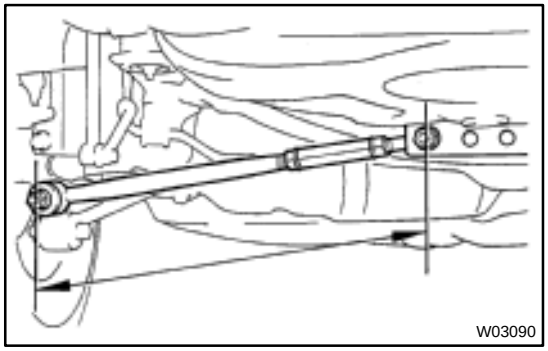

5. ADJUST TOE–IN

(a) Measure the length of the left and right No.2 lower suspension arms.

No.2 lower suspension arm length difference:

1 mm (0.04 in.) or less

If the left–right difference is larger than the specification, adjust the length.

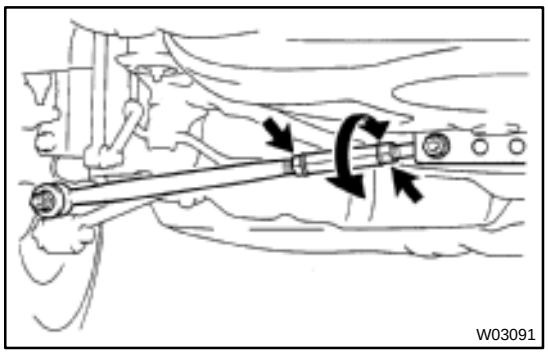

(b) Loosen the lock nuts.

(c) Turn the left and right lower suspension arms an equal amount to adjust toe–in.

HINT:

- Try to adjust the toe–in to the center value.
- One turn of the each adjusting tube will adjust the toe–in about 36’ (0.6˚, 6.7 mm, 0.264 in.).

(d) Torque the lock nuts.

Torque: 56 N·m (570 kgf·cm, 41 ft·lbf)

FRONT AXLE HUB

SA07B–01

COMPONENTS

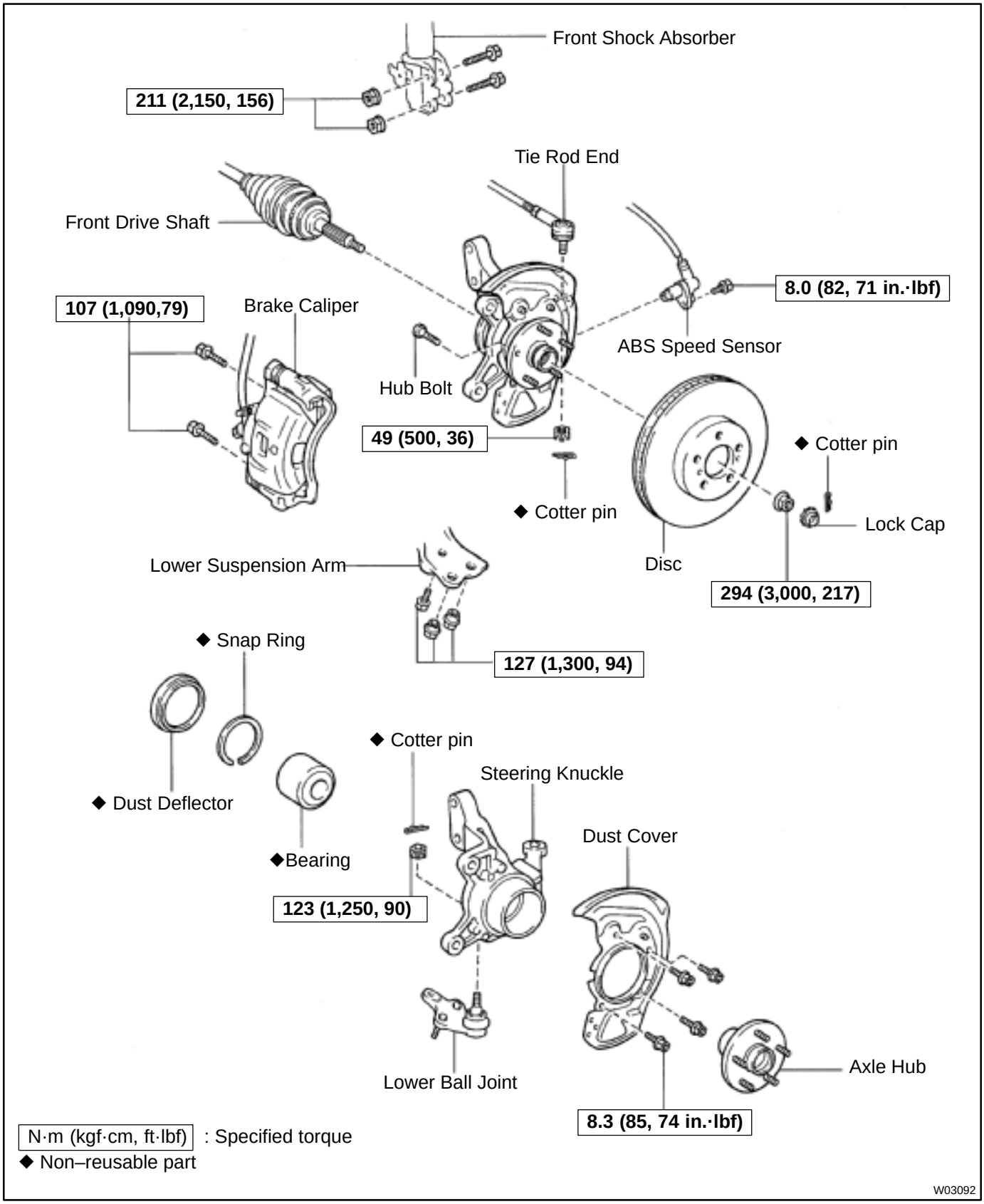

SA07C–01

REMOVAL

1. REMOVE FRONT WHEEL
Torque: 103 N·m (1,050 kgf·cm, 76 ft·lbf)

2. CHECK BEARING BACKLASH AND AXLE HUB DEVIATION

(a) Remove the 2 bolts, brake caliper and disc.

(b) Support the brake caliper securely.

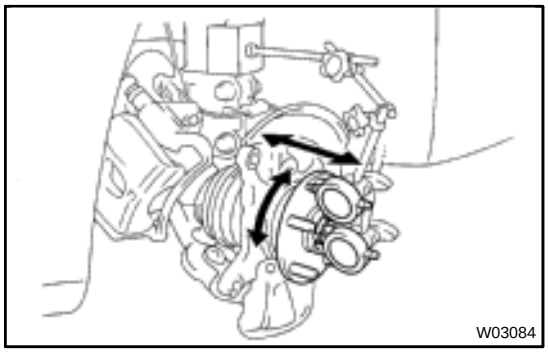

(c) Using a dial indicator near the center of the axle hub and check the backlash in the bearing shaft direction.
Maximum: 0.05 mm (0.0020 in.)

If the backlash exceeds the maximum, replace the bearing.

(d) Using a dial indicator, check the deviation at the surface of the axle hub outside the hub bolt.
Maximum: 0.05 mm (0.0020 in.)

If the deviation exceeds the maximum, replace the bearing.

(e) Install the disc, 2 bolts and brake caliper.
Torque: 107 N·m (1,090 kgf·cm, 79 ft·lbf)

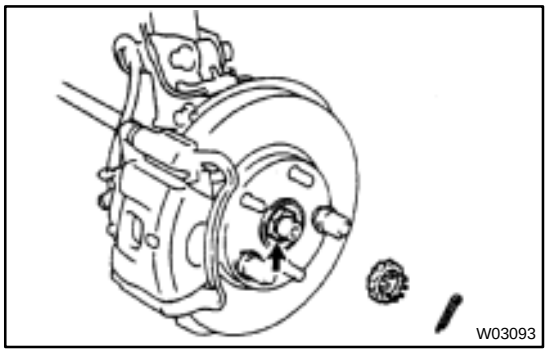

3. REMOVE DRIVE SHAFT LOCK NUT

(a) Remove the cotter pin and lock cap.

(b) With applying the brakes, remove the nut.
Torque: 294 N·m (3,000 kgf·cm, 217 ft·lbf)

(c) Remove the brake caliper and disc.

4. w/ ABS:
REMOVE ABS SPEED SENSOR AND WIRE HARNESS CLAMP
Torque: 8.0 N·m (82 kgf·cm, 71 in.·lbf)

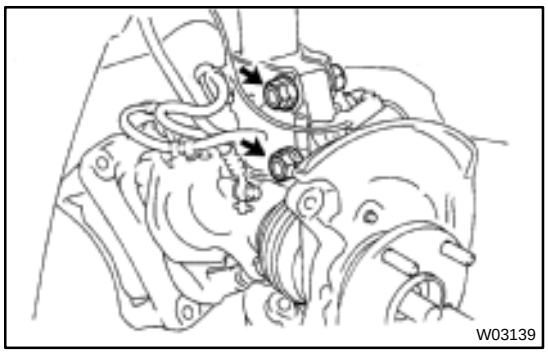

5. LOOSEN 2 NUTS ON LOWER SIDE OF SHOCK ABSORBER
Torque: 211 N·m (2,150 kgf·cm, 156 ft·lbf)

HINT:

- Do not remove the bolts.
- At the time of installation, coat the nut's thread with engine oil.

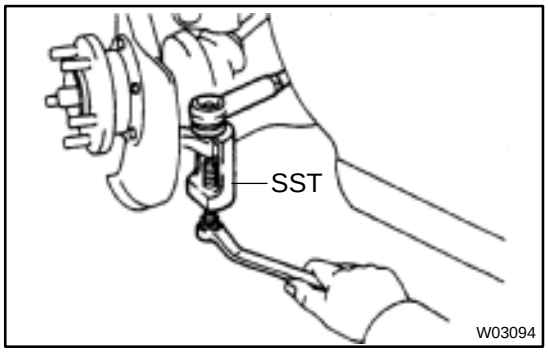

6. DISCONNECT TIE ROD END FROM STEERING KNUCKLE

(a) Remove the cotter pin and nut.
Torque: 49 N·m (500 kgf·cm, 36 ft·lbf)

(b) Using SST, disconnect the tie rod end from the steering knuckle.
SST 09610–20012

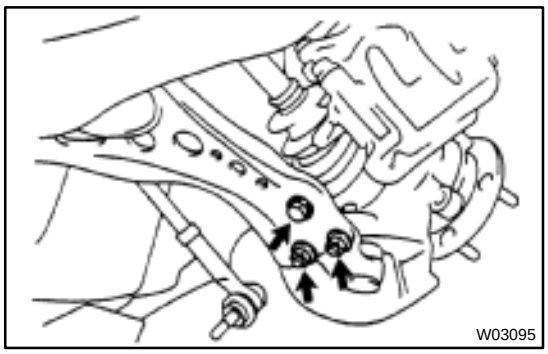

7. DISCONNECT LOWER BALL JOINT FROM LOWER ARM

Remove the 2 nuts and bolt.

Torque: 127 N·m (1,300 kgf·cm, 94 ft·lbf)

8. REMOVE STEERING KNUCKLE WITH AXLE HUB

(a) Remove the 2 bolts on the lower side of the shock absorber.

(b) Remove the steering knuckle with the axle hub.

NOTICE:

Be careful not to damage the oil seal with drive shaft.

SA07D–01

DISASSEMBLY

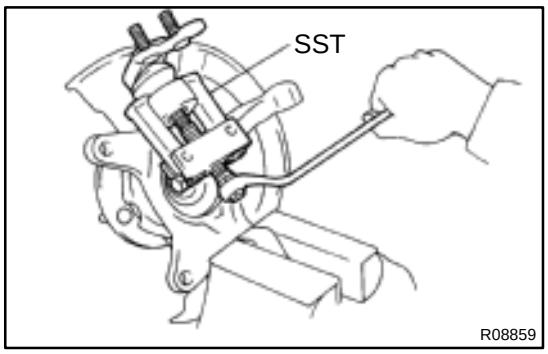

1. REMOVE DUST DEFLECTOR

Using a screwdriver, remove the dust deflector.

2. REMOVE LOWER BALL JOINT

(a) Remove the cotter pin and nut.

(b) Using SST, remove the lower ball joint.
SST 09628–62011

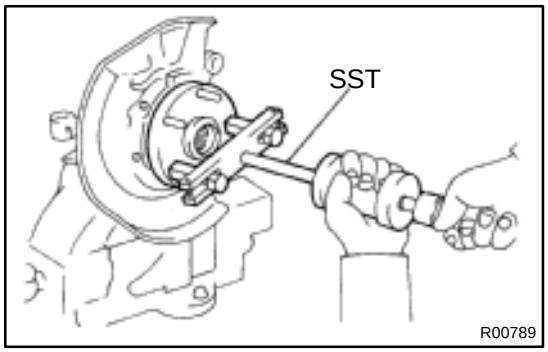

3. REMOVE AXLE HUB

(a) Using SST, remove the axle hub.
SST 09520–00031

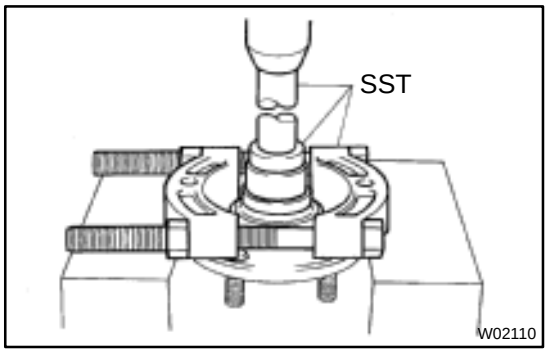

(b) Using SST and a press, remove the inner race (outside) from the axle hub.
SST 09950–00020, 09950–60010 (09951–00400), 09950–70010 (09951–07100)

4. REMOVE DUST COVER

Using a torx wrench (T30), remove the 4 bolts and dust cover.

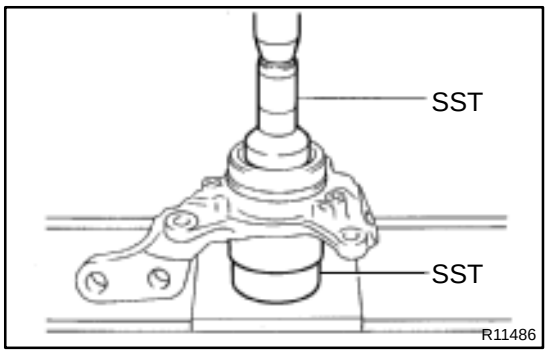

5. REMOVE BEARING FROM STEERING KNUCKLE

(a) Using snap ring pliers, remove the snap ring.

(b) Place the inner race on the outside of the bearing.

(c) Using SST and a press, remove the bearing.
SST 09310–35010, 09527–17011

SA07E–01

REASSEMBLY

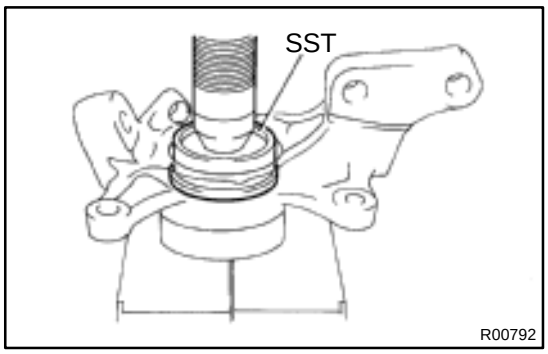

1. INSTALL BEARING

(a) Using SST and a press, install a new bearing to the steering knuckle.
SST 09608–32010

(b) Using snap ring pliers, install a new snap ring.

2. INSTALL DUST COVER

Place the dust cover and using a torx wrench (T30), torque the 4 bolts.

Torque: 8.3 N·m (85 kgf·cm, 74 in.·lbf)

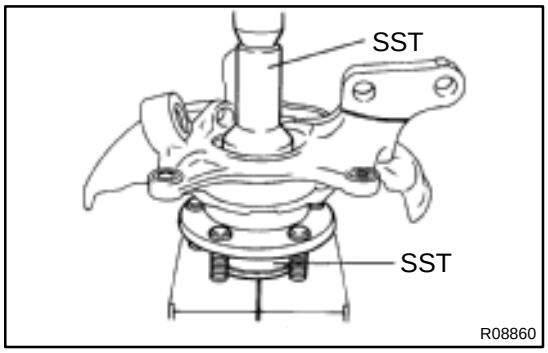

3. INSTALL FRONT AXLE HUB

Using SST and a press, install the axle hub.
SST 09310–35010, 09608–32010

4. INSTALL LOWER BALL JOINT

(a) Install the lower ball joint and torque the nut.
Torque: 123 N·m (1,250 kgf·cm, 90 ft·lbf)

(b) Install a new cotter pin.

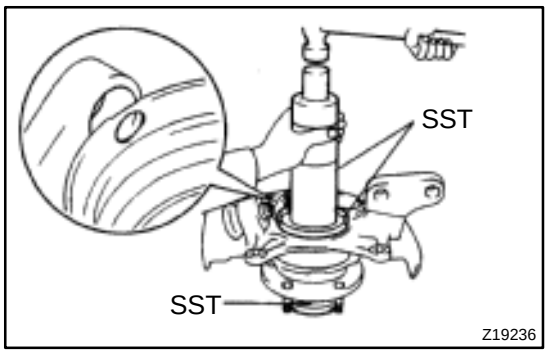

5. INSTALL DUST DEFLECTOR

Using SST and a hammer, install a new dust deflector.
SST 09316–60011 (09316–00011, 09316–00041), 09608–32010

HINT:
Align the holes for the ABS speed sensor in the dust deflector and steering knuckle.

SA07F–01

INSTALLATION

Installation is in the reverse order of removal (See page SA–10).

AFTER INSTALLATION, CHECK ABS SPEED SENSOR SIGNAL (See page DI–493 or DI–539) AND FRONT WHEEL ALIGNMENT (See page SA–4)

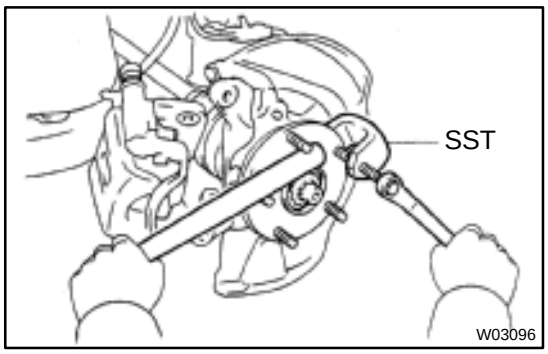

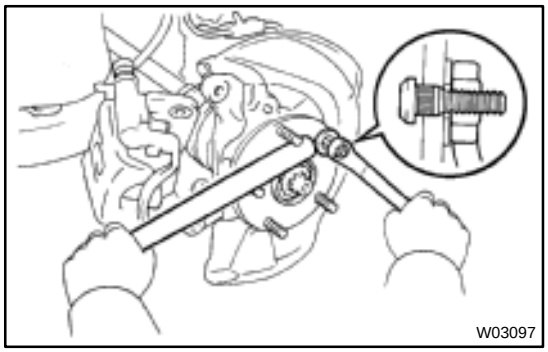

FRONT WHEEL HUB BOLT

SA07G–01

REPLACEMENT

1. REMOVE FRONT WHEEL

2. REMOVE BRAKE CALIPER AND DISC

(a) Remove the 2 bolts, brake caliper and disc.

(b) Support the brake caliper securely.

3. REMOVE HUB BOLT

Using SST, remove the hub bolt.

SST 09628–10011

4. INSTALL HUB BOLT

Install a washer and nut to the hub bolt as shown in the illustration, and install the hub bolt by torquing the nut.

5. INSTALL BRAKE DISC AND CALIPER

Install the disc, 2 bolts and brake caliper.

6. INSTALL FRONT WHEEL

Torque: 103 N·m (1,050 kgf·cm, 76 ft·lbf)

FRONT DRIVE SHAFT (5S–FE)

SA08P–01

COMPONENTS

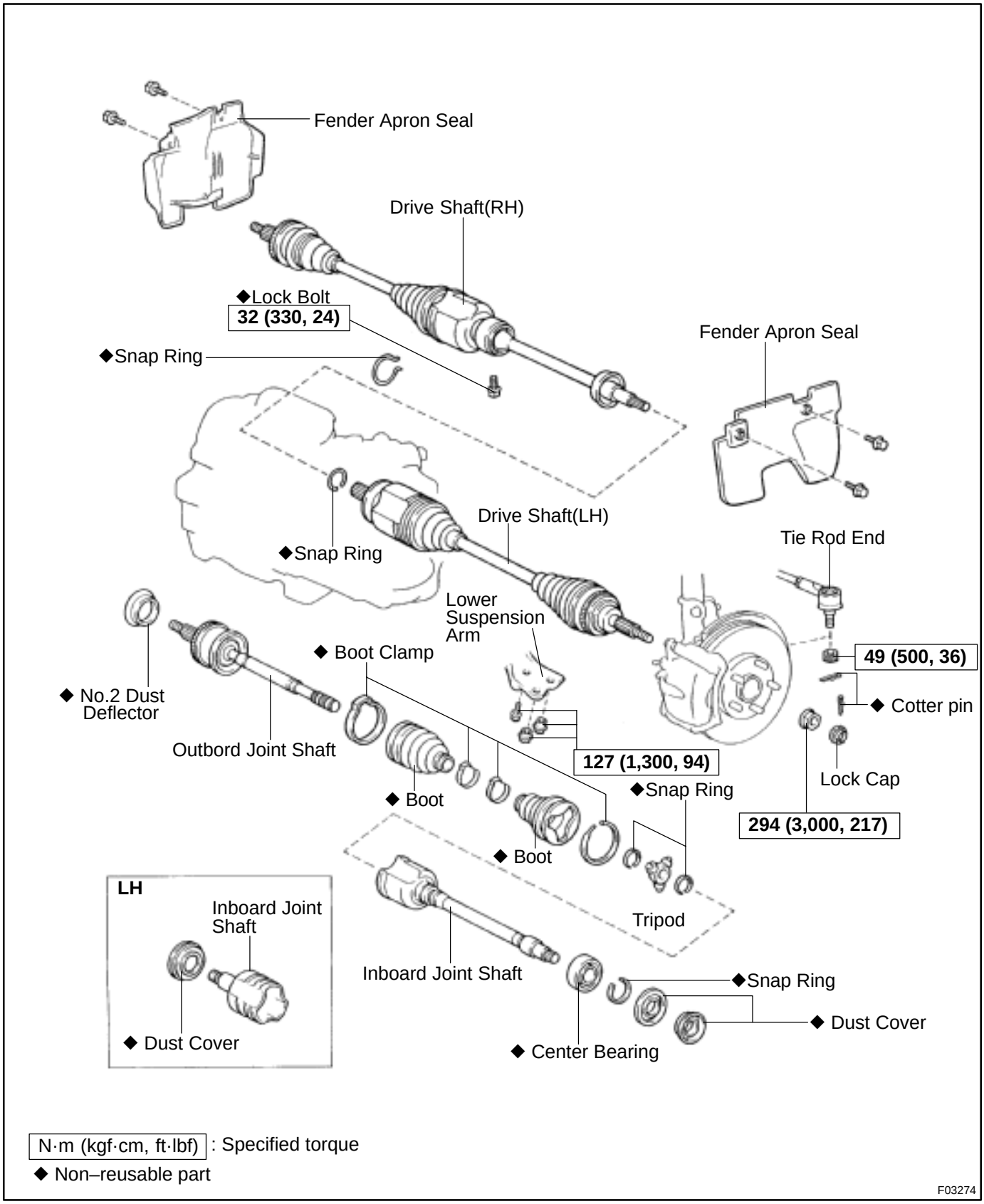

N·m (kgf·cm, ft·lbf) : Specified torque

◆ Non–reusable part

F03274

SA08Q–01

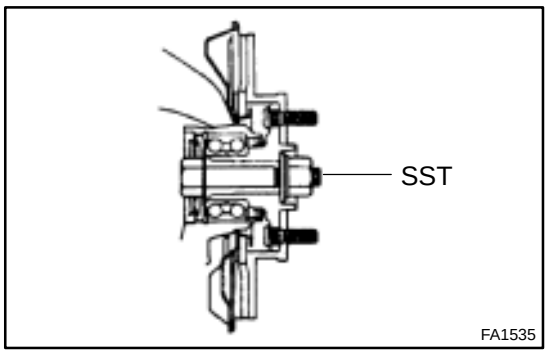

REMOVAL

NOTICE:

The hub bearing could be damaged if it is subjected to the vehicle weight, such as when moving the vehicle with the drive shaft removed.

Therefore, if it is absolutely necessary to place the vehicle weight on the hub bearing, first support it with SST.

SST 09608–16042 (09608–02021, 09608–02041)

1. REMOVE FRONT WHEEL AND FRONT FENDER APRON SEAL

Torque: 103 N·m (1,050 kgf·cm, 76 ft·lbf)

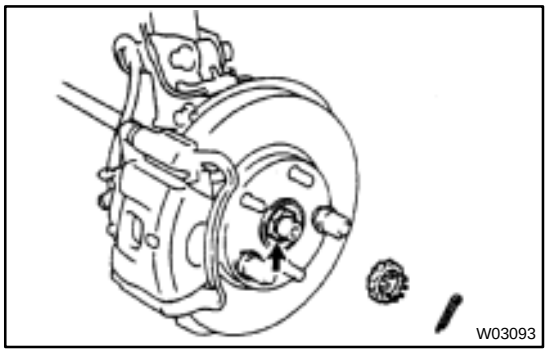

2. REMOVE DRIVE SHAFT LOCK NUT

(a) Remove the cotter pin and lock cap.

(b) With applying the brakes, remove the nut.

Torque: 294 N·m (3,000 kgf·cm, 217 ft·lbf)

3. DRAIN GEAR OIL (M/T) or ATF (A/T)

4. DISCONNECT TIE ROD END FROM STEERING KNUCKLE (See page SA–10)

5. DISCONNECT LOWER BALL JOINT FROM LOWER SUSPENSION ARM (See page SA–10)

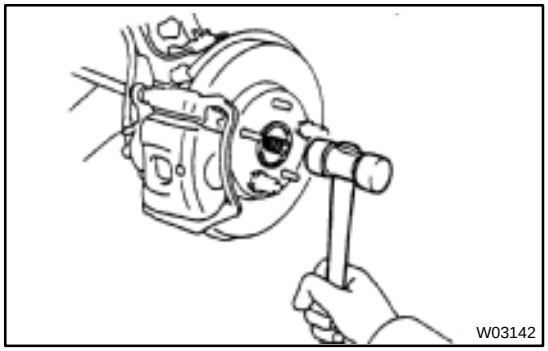

6. DISCONNECT DRIVE SHAFT FROM AXLE HUB

(a) Using a plastic hammer, disconnect the drive shaft from the axle hub.

NOTICE:

Cover the drive shaft boot with cloth to protect it from damage.

(b) Push the front axle hub toward the outside of the vehicle, and separate the drive shaft from the axle hub.

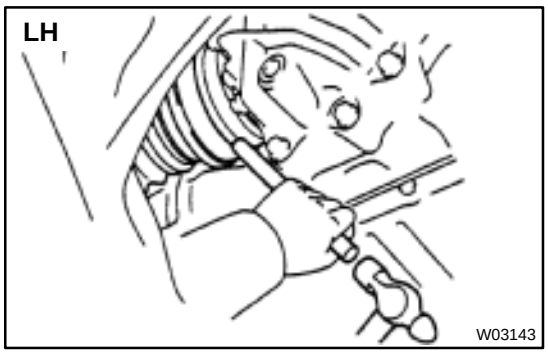

7. REMOVE LH DRIVE SHAFT

(a) Using a brass bar and hammer, remove the drive shaft.

HINT:

At the time of installation, please refer to the following items.

- Coat gear oil to the inboard joint shaft and differential case sliding surface.
- Before installing the drive shaft, set the snap ring with its opening side facing downward.
- Whether or not the inboard joint shaft is making contact with the pinion shaft can be known by the sound or feeling when driving it in.
- After installation, check that there is 2 – 3 mm (0.08 – 0.12 in.) of play in the axial direction.
- After installation, check that the drive shaft cannot be removed by hand.

(b) Using a screwdriver, remove the snap ring from the inboard joint shaft.

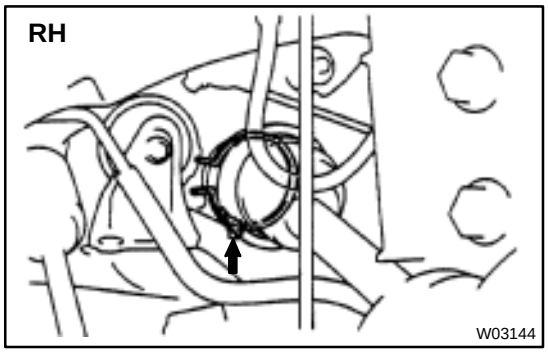

8. REMOVE RH DRIVE SHAFT

(a) Remove the bearing lock bolt.

Torque: 32 N·m (330 kgf·cm, 24 ft·lbf)

(b) Using pliers, remove the snap ring and drive shaft.

HINT:

At the time of installation, coat gear oil to the inboard joint shaft and differential case sliding surface.

SA08R–01

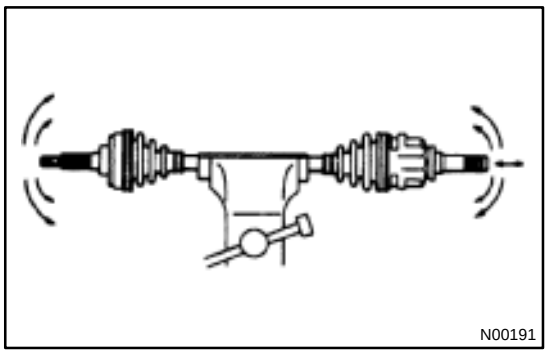
N00191

DISASSEMBLY

1. CHECK DRIVE SHAFT

(a) Check to see that there is no play in the outboard joint shaft.

(b) Check to see that the inboard joint shaft slides smoothly in the thrust direction.

(c) Check to see that there is no remarkable play in the radial direction of the inboard joint shaft.

(d) Check for damage to boots.

2. REMOVE INBOARD AND OUTBOARD JOINT BOOT CLAMPS

(a) Using pliers, draw the hooks together and remove the large inboard joint boot clamp.

(b) Using a side cutter, cut the small inboard and 2 outboard joint boot clamps and remove them.

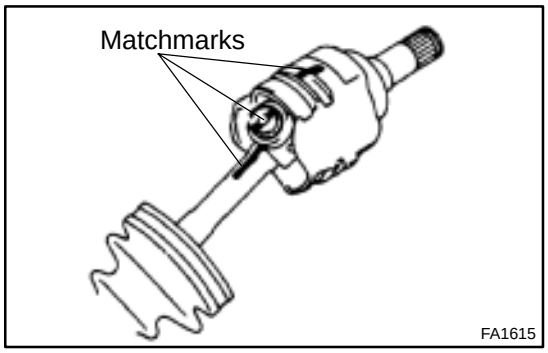

FA1615

3. REMOVE INBOARD JOINT SHAFT

(a) Place matchmarks on the tripod, inboard and outboard-joint shafts.

NOTICE:

Do not punch the marks.

(b) Remove the inboard joint shaft from the outboard joint shaft.

4. REMOVE TRIPOD

(a) Using a snap ring expander, remove the snap ring.

(b) Using a snap ring expander, temporarily slide the snap ring toward the outboard joint shaft side.

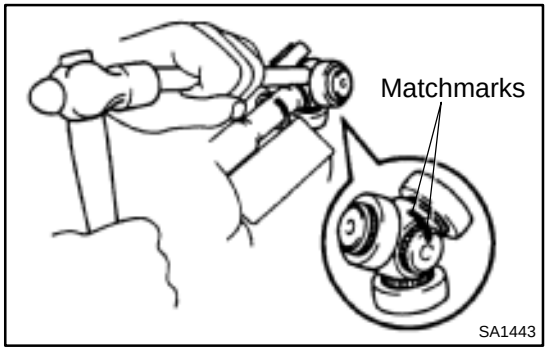

SA1443

(c) Place matchmarks on the outboard joint shaft and tripod.

(d) Using a brass bar and hammer, remove the tripod from the outboard joint shaft.

(e) Using a snap ring expander, remove the snap ring.

5. REMOVE INBOARD AND OUTBOARD JOINT BOOTS

Slide out the 2 boots.

NOTICE:

Do not disassemble the outboard joint.

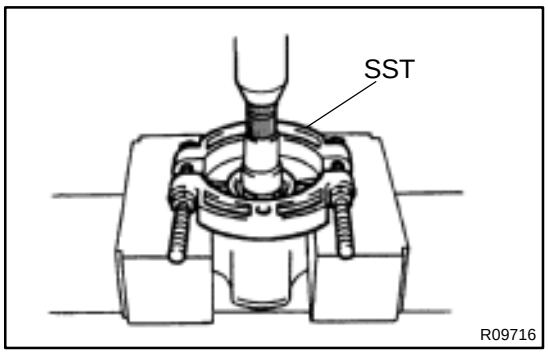

6. REMOVE DUST COVER

◆ (LH drive shaft)
Using SST and a press, remove the dust cover from the inboard joint shaft.
SST 09950–00020

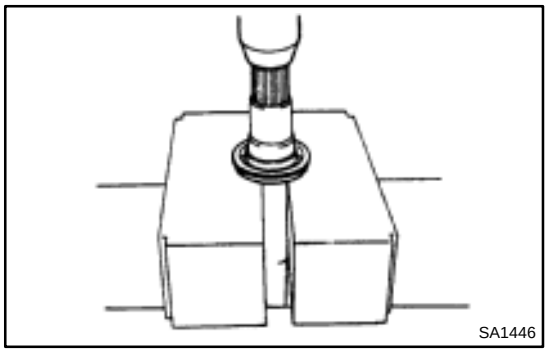

◆ (RH drive shaft)
Using a press, remove the dust cover from the inboard joint shaft.

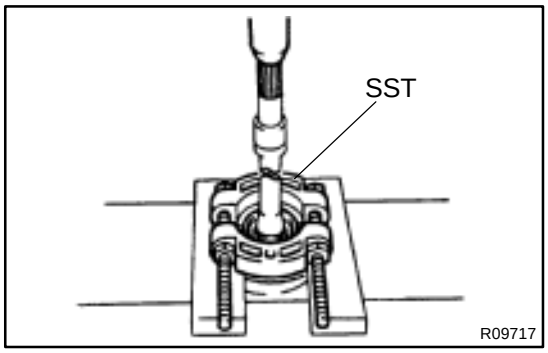

7. RH DRIVE SHAFT:
DISASSEMBLE INBOARD JOINT SHAFT

(a) Using SST and a press, remove the dust cover.
SST 09950–00020

(b) Using a snap ring expander, remove the snap ring.

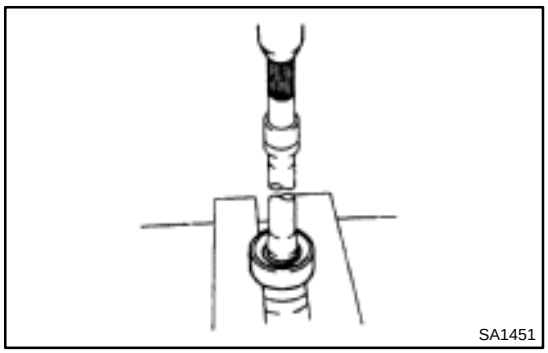

(c) Using a press, remove the bearing.

(d) Remove the snap ring.

8. REMOVE NO.2 DUST DEFLECTOR

(a) Mount outboard joint shaft in a soft jaw vise.

(b) Using a screwdriver and hammer, remove the No.2 dust deflector.

NOTICE:

Be careful not to damage the ABS speed sensor rotor.

SA08S–01

REASSEMBLY

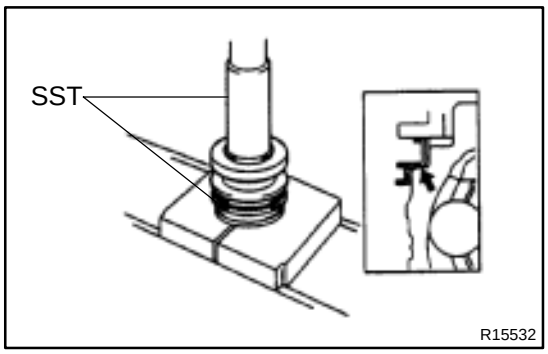

1. INSTALL NO.2 DUST DEFLECTOR

Using SST and a press, install a new No.2 dust deflector.

SST 09309–36010, 09316–20011

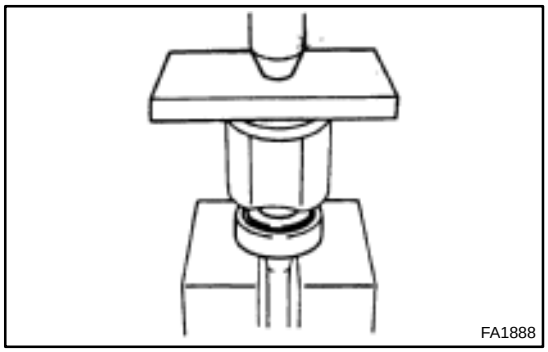

2. RH DRIVE SHAFT: ASSEMBLE INBOARD JOINT SHAFT

(a) Install a new snap ring to the inboard joint shaft.

(b) Using a press, install a new bearing.

(c) Using a snap ring expander, install a new snap ring.

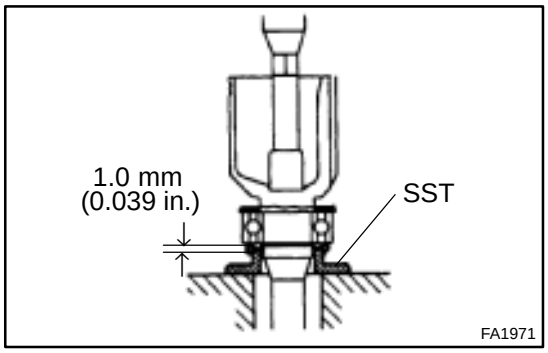

(d) Using SST, an extension bar and press, install a new dust cover.

SST 09506–35010

HINT:

The clearance between the dust cover and the bearing should be kept in the range shown in the illustration.

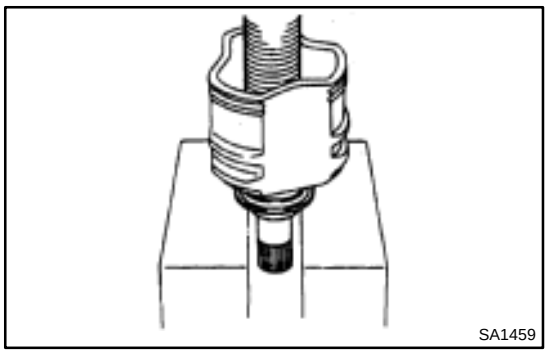

3. INSTALL DUST COVER

◆ (LH drive shaft)

Using a press, install a new dust cover.

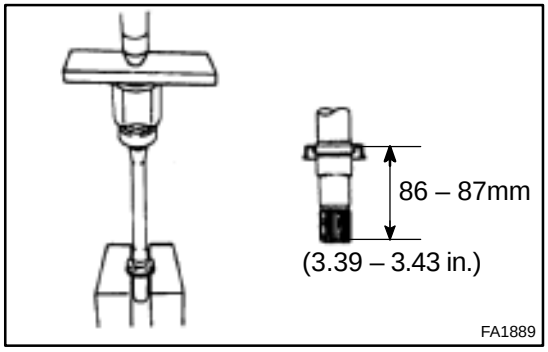

◆ (RH drive shaft)

Using a press, install a new dust cover until the distance from the tip of the inboard joint shaft to the dust cover falls within the specification, as shown in the illustration.

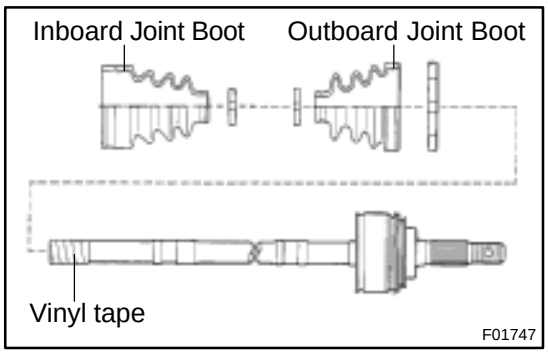

4. TEMPORARILY INSTALL OUTBOARD AND INBOARD JOINT BOOTS AND NEW BOOT CLAMPS

HINT:

- Before installing the boots, wrap the spline of the drive shaft in vinyl tape to prevent the boots from being damaged.
- Before installing the boots, place 3 new clamps to the small boot ends and large end (wheel side) and then install boots to drive shaft.

5. INSTALL TRIPOD

(a) Using a snap ring expander, install a new snap ring.
(b) Place the beveled side of the tripod axial spline toward the outboard joint shaft.
(c) Align the matchmarks placed before removal.
(d) Using a brass bar and hammer, tap in the tripod to the outboard joint shaft.

NOTICE:

Do not tap the roller.

(e) Using a snap ring expander, install a new snap ring.

6. INSTALL BOOT TO OUTBOARD JOINT SHAFT

Before assembling the boot, coat the outboard joint and boot with grease in the boot kit.

Grease capacity: (Color = Black)
100 – 120 g (3.5 – 4.2 oz.)

7. INSTALL INBOARD JOINT SHAFT TO OUTBOARD JOINT SHAFT

(a) Coat the inboard joint and boot with grease in the boot kit.
Grease capacity: (Color = Yellow ocher)
125 – 155 g (4.4 – 5.5 oz)
(b) Align the matchmarks placed before removal, and install the inboard joint shaft to the outboard joint shaft.
(c) Install the boot to the inboard joint shaft.

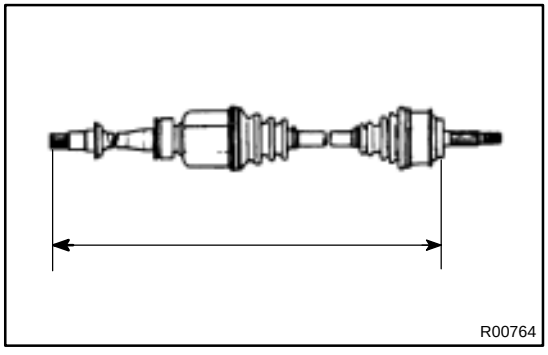

8. ASSEMBLE BOOT CLAMPS TO BOTH BOOTS

(a) Make sure that the 2 boots are on the shaft groove.
(b) Make sure that the 2 boots are not stretched or contracted when the drive shaft is at standard length.

Drive shaft standard length

LH	609.2 ± 2.0 mm (23.984 ± 0.079 in.)
RH	867.3 ± 2.0 mm (34.146 ± 0.079 in.)

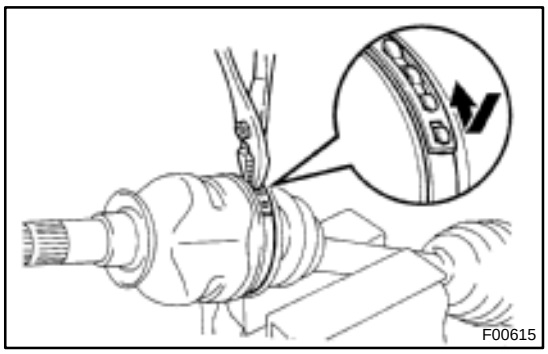

(c) Holding the clamp near the closing hooks, using pliers, position the holes in the clamp's free end over the closing hooks.
(d) Secure clamp by drawing the closing hooks together.

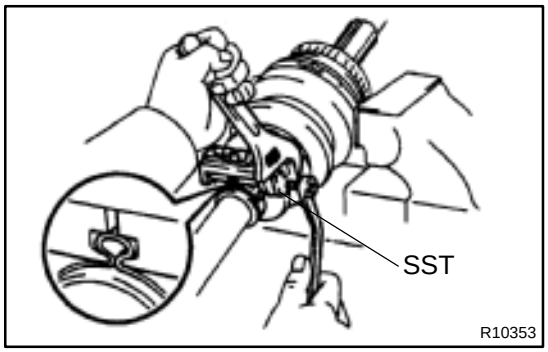

(e) Secure the preplaced 3 clamps onto the boots.
(f) Place SST onto the clamp.
SST 09521–24010
(g) Tighten the SST so that the clamp is pinched.

NOTICE:
Do not overtighten the SST.

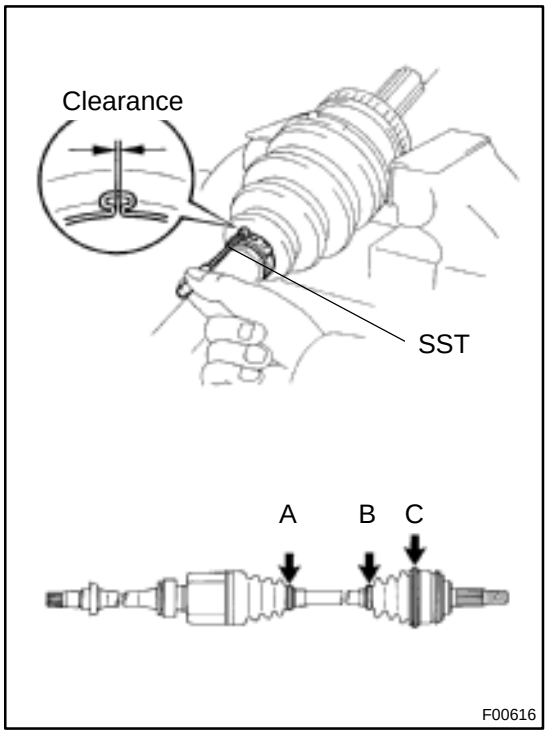

(h) Using SST, adjust the clearance of the clamp.
SST 09240–00020
Clearance:
A : 1.9 mm (0.075 in.) or less
B : 1.5 – 2.5 mm (0.059 – 0.098 in.)
C : 3.0 – 4.0 mm (0.118 – 0.157 in.)

9. CHECK DRIVE SHAFT (See page SA–19)

SA08T–01

INSTALLATION

Installation is in the reverse order of removal (See page SA–17).

AFTER INSTALLATION, CHECK ABS SPEED SENSOR SIGNAL (See page DI–493 or DI–539) AND FRONT WHEEL ALIGNMENT(See page SA–4)

FRONT DRIVE SHAFT (1MZ–FE)

SA07H–01

COMPONENTS

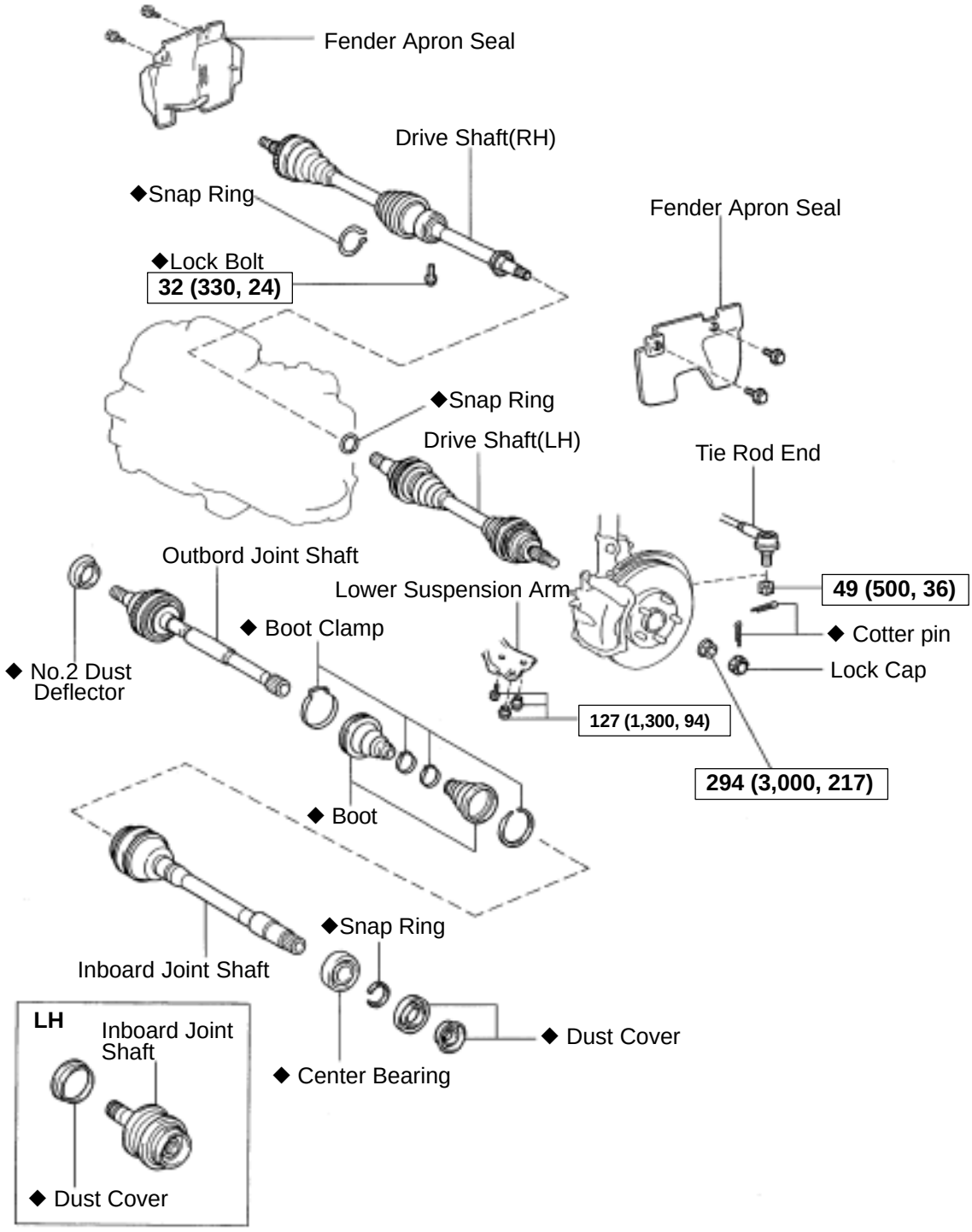

N·m (kgf·cm, ft·lbf) : Specified torque

◆ Non–reusable part

W03141

SA07I–01

REMOVAL

(See page SA–17)

SA07J–01

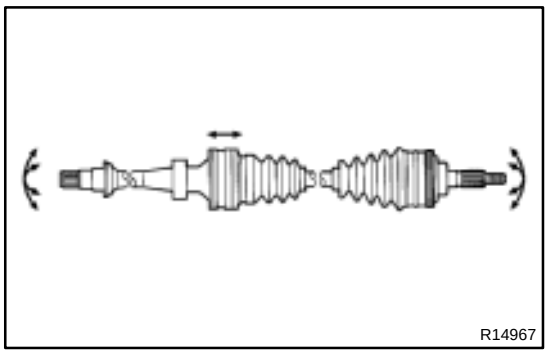
R14967

DISASSEMBLY

1. CHECK DRIVE SHAFT

(a) Check to see that there is no play in the outboard joint shaft.

(b) Check to see that the inboard joint shaft slides smoothly in the thrust direction.

(c) Check to see that there is no remarkable play in the radial direction of the inboard joint shaft.

(d) Check for damage to boots.

2. REMOVE INBOARD AND OUTBOARD JOINT BOOT CLAMPS

(a) Using pliers, draw the hooks together and remove the large inboard joint boot clamp.

(b) Using a side cutter, cut the small inboard and 2 outboard joint boot clamps and remove them.

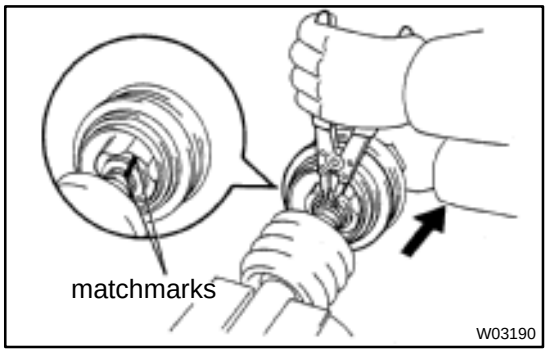

W03190

3. REMOVE INBOARD JOINT SHAFT FROM OUTBOARD JOINT SHAFT

(a) Place matchmarks on the inboard and outboard joint shafts.

NOTICE:

Do not punch the marks.

(b) Using a snap ring expander, pull out the outboard joint shaft expanding the snap ring.

4. REMOVE INBOARD AND OUTBOARD JOINT BOOTS

Slide out the 2 boots.

5. REMOVE DUST COVER

◆ (LH drive shaft)

Using a screwdriver and hammer, remove the dust cover from the inboard joint shaft.

◆ (RH drive shaft)

Using a press, remove the dust cover from the inboard joint shaft.

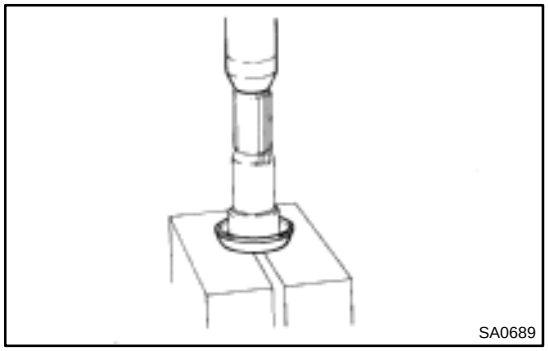
SA0689

6. RH DRIVE SHAFT: DISASSEMBLE INBOARD JOINT SHAFT

(a) Using SST and a press, remove the dust cover.
SST 09950–00020

(b) Using a snap ring expander, remove the snap ring.

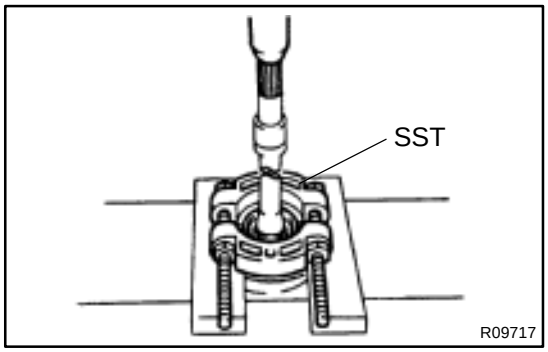

R09717

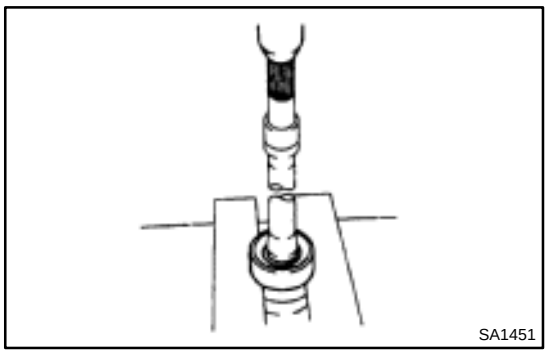
SA1451

(c) Using a press, remove the bearing.
(d) Remove the snap ring.

7. REMOVE NO.2 DUST DEFLECTOR

(a) Mount outboard joint shaft in a soft jaw vise.
(b) Using a screwdriver and hammer, remove the No.2 dust deflector.

NOTICE:

Be careful not to damage the ABS speed sensor rotor.

SA07K–01

REASSEMBLY

1. INSTALL NO.2 DUST DEFLECTOR

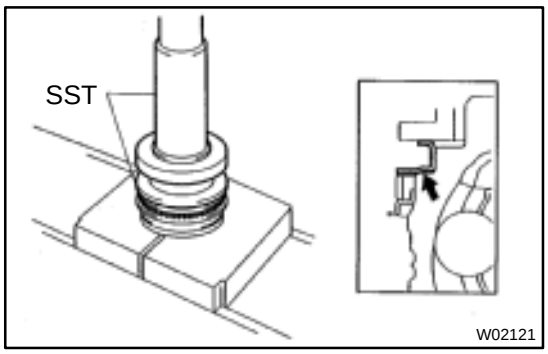

Using SST and a press, install a new No.2 dust deflector.

SST 09309–36010, 09316–20011

2. RH DRIVE SHAFT: ASSEMBLE INBOARD JOINT SHAFT

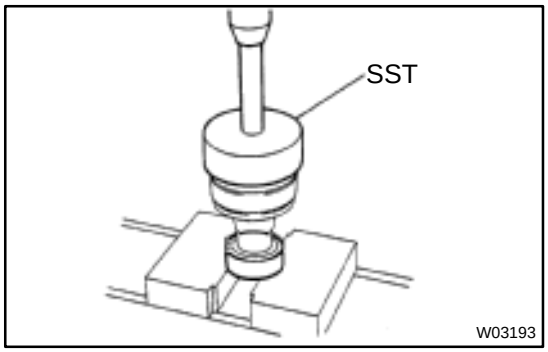

(a) Install a new snap ring to the inboard joint shaft.

(b) Using SST and a press, install a new bearing.

SST 09223–56010

(c) Using a snap ring expander, install a new snap ring.

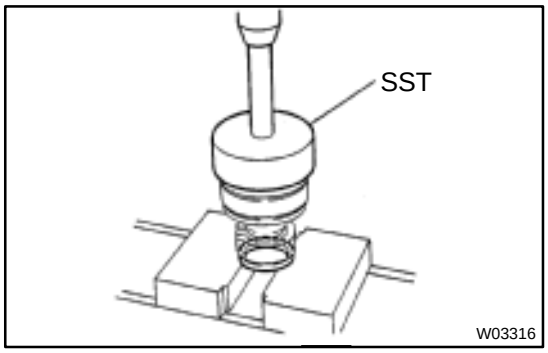

(d) Using SST and a press, install a new dust cover.

SST 09223–56010

3. INSTALL DUST COVER

◆ (LH drive shaft)

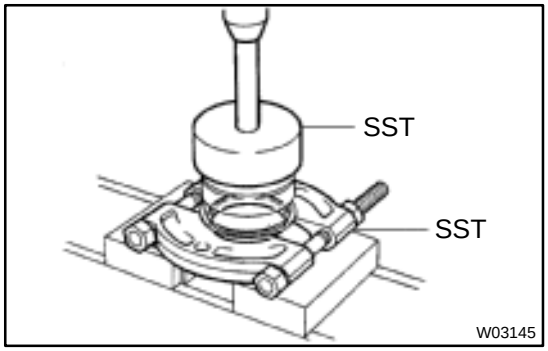

Using SST and a press, install a dust cover.

SST 09223–56010, 09555–55010

◆ (RH drive shaft)

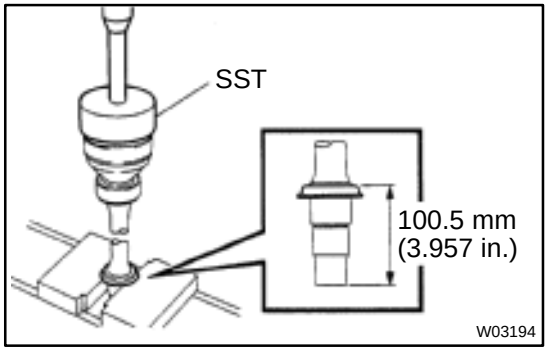

Using SST and a press, install a new dust cover until the distance from the tip of the inboard joint shaft to the dust cover falls within the specification, as shown in the illustration.

SST 09223–56010

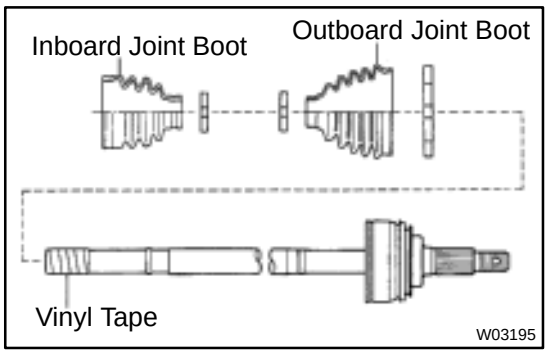

4. TEMPORARILY INSTALL OUTBOARD AND INBOARD JOINT BOOTS AND NEW BOOT CLAMPS

HINT:

- Before installing the boots, wrap the spline of the drive shaft in vinyl tape to prevent the boots from being damaged.
- Before installing the boots, place 3 new clamps to the small boot ends and large end (wheel side) and then install boots to drive shaft.

5. INSTALL INBOARD JOINT SHAFT TO OUTBOARD JOINT SHAFT

Align the matchmarks placed at removal, and using a snap ring expander, put in the inboard joint shaft expanding the snap ring.

6. INSTALL BOOT TO OUTBOARD JOINT

Before assembling the boot, pack the outboard joint and boot with grease in the boot kit.

Grease capacity: (Color = Black)
105 – 125 g (3.7 – 4.4 oz.)

7. INSTALL BOOT TO INBOARD JOINT SHAFT

(a) Pack the inboard joint and boot with grease in the boot kit.
Grease capacity: (Color = Gray)
Joint side: 142.5 – 157.5 g (5.0 – 5.6 oz.)
Boot side: 52.5 – 57.5 g (2.1 – 2.3 oz.)

(b) Install the boot to the inboard joint shaft.

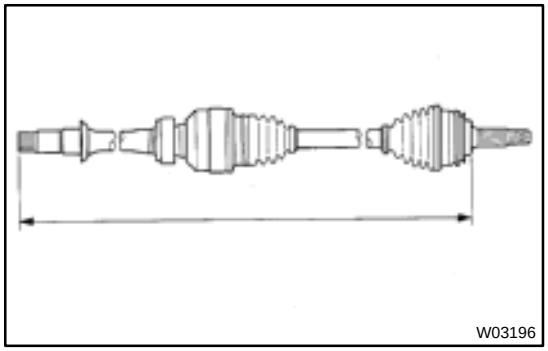

8. ASSEMBLE BOOT CLAMPS TO BOTH BOOTS

(a) Make sure that the 2 boots are on the shaft groove.

(b) Make sure that the 2 boots are not stretched or contracted when the drive shaft is at standard length.
Drive shaft standard length:

M/T LH	601.5 ± 2.0 mm (23.681 ± 0.079 in.)
RH	871.6 ± 2.0 mm (34.315 ± 0.079 in.)
A/T LH	586.0 ± 2.0 mm (23.071 ± 0.079 in.)
RH	881.6 ± 2.0 mm (34.709 ± 0.079 in.)

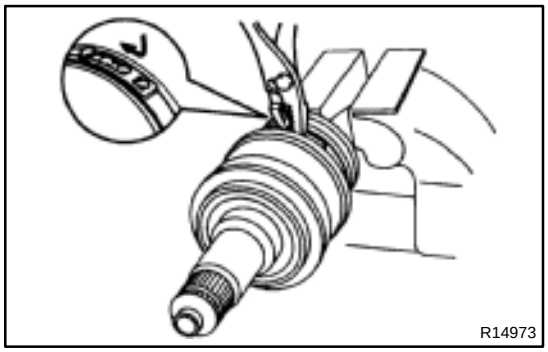

(c) Holding the clamp near the closing hooks, using pliers, position the holes in the clamp's free end over the closing hooks.

(d) Secure clamp by drawing the closing hooks together.

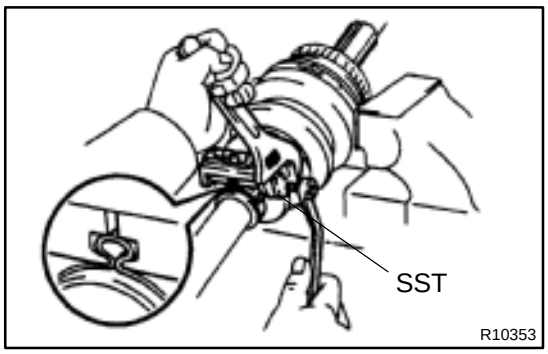

(e) Secure the preplaced 3 clamps onto the boots.
(f) Place SST onto the clamp.
SST 09521–24010
(g) Tighten the SST so that the clamp is pinched.

NOTICE:
Do not overtighten the SST.

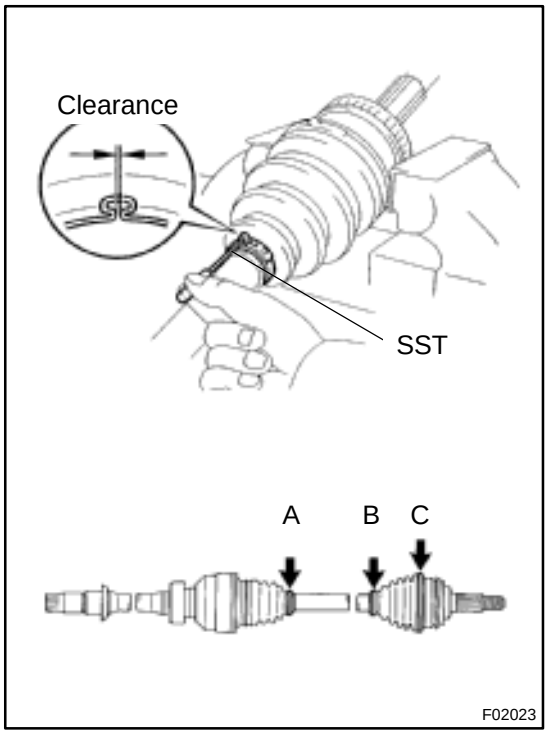

(h) Using SST, adjust the clearance of the clamp.
SST 09240–00020
Clearance:
A : 1.9 mm (0.075 in.) or less
B : 1.5 – 2.5 mm (0.059 – 0.098 in.)
C : 3.0 – 4.0 mm (0.118 – 0.157 in.)

9. CHECK DRIVE SHAFT (See page SA–27)

SA07L–01

INSTALLATION

Installation is in the reverse order of removal (See page SA–26).

AFTER INSTALLATION, CHECK ABS SPEED SENSOR SIGNAL (See page DI–493 or DI–539) AND FRONT WHEEL ALIGNMENT (See page SA–4)

FRONT SHOCK ABSORBER

SA07M–05

COMPONENTS

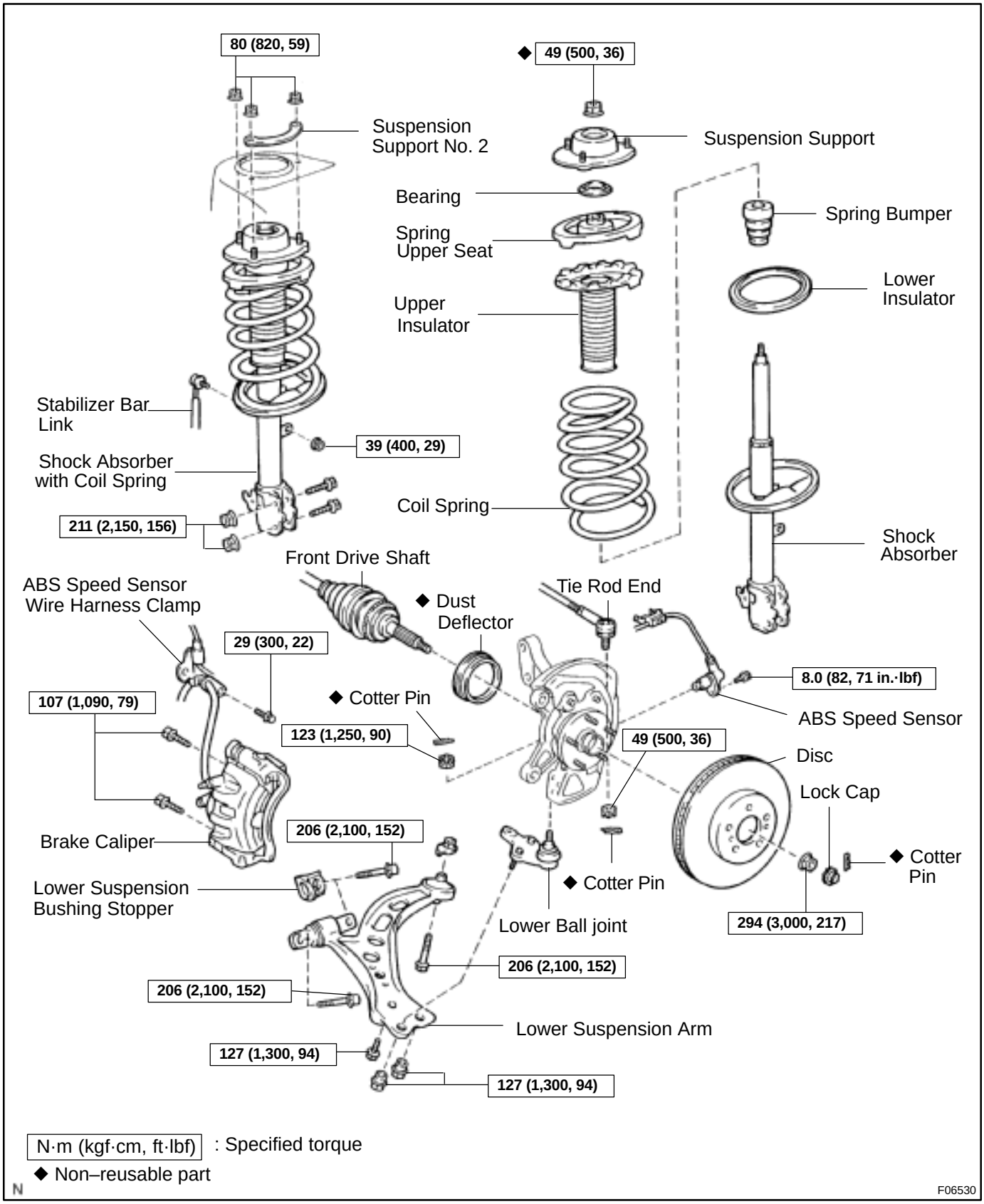

N·m (kgf·cm, ft·lbf) : Specified torque

◆ Non–reusable part

N

F06530

SA07N–01

REMOVAL

1. REMOVE FRONT WHEEL

Torque: 103 N·m (1,050 kgf·cm, 76 ft·lbf)

2. REMOVE FLEXIBLE HOSE AND ABS SPEED SENSOR WIRE HARNESS (w/ ABS) AND CLAMP FROM SHOCK ABSORBER

Remove the bolt, flexible hose and ABS wire harness clamp.

Torque: 29 N·m (300 kgf·cm, 22 ft·lbf)

3. DISCONNECT STABILIZER BAR LINK FROM SHOCK ABSORBER (See page SA–48)

4. DISCONNECT SHOCK ABSORBER FROM STEERING KNUCKLE

(a) Remove the 2 nuts and bolts on the lower side of the shock absorber.

Torque: 211 N·m (2,150 kgf·cm, 156 ft·lbf)

(b) Remove the shock absorber from the steering knuckle.

HINT:

At the time of installation, coat the nut's threads with engine oil.

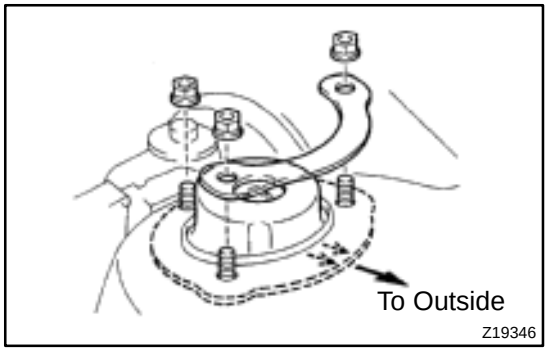

5. REMOVE SHOCK ABSORBER WITH COIL SPRING

Remove the 3 nuts, suspension support No.2 and shock absorber with the coil spring.

Torque: 80 N·m (820 kgf·cm, 59 ft·lbf)

HINT:

At the time of installation rotate the suspension support and set it in the direction, as shown in the illustration.

SA07O–01

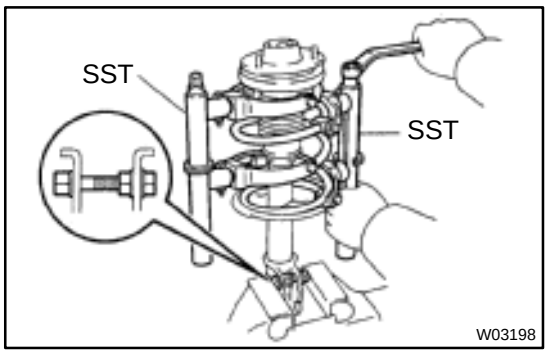

DISASSEMBLY

REMOVE COIL SPRING

(a) Install 2 nuts and a bolt to the bracket at the lower portion of the shock absorber and secure it in a vise.

(b) Using SST, compress the coil spring.
SST 09727–30021

NOTICE:

- **When holding the shock absorber with the coil spring removed, do not hold it by the spring lower seat. Also, do not knock the spring lower seat.**
- **Do not use an impact wrench. It will damage the SST.**

HINT:
Use 2 of the same type of SST.

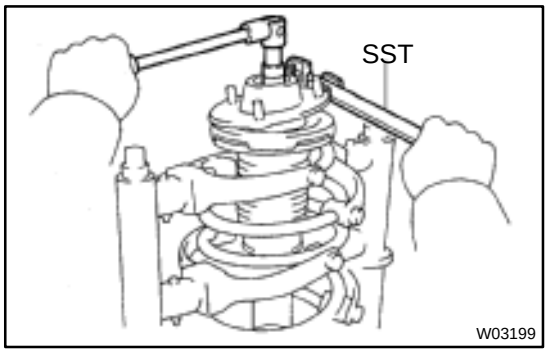

(c) Using SST to hold the suspension support, remove the nut.
SST 09729–22031

(d) Remove these parts from the shock absorber:
- Suspension support
- Bearing
- Spring upper seat
- Upper insulator
- Coil spring
- Lower insulator
- Spring bumper

SA07P–01

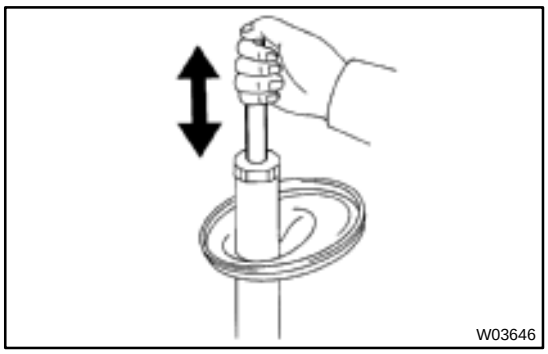

INSPECTION

INSPECT SHOCK ABSORBER

Compress and extend the shock absorber rod and check that there is no abnormal resistance or unusual operation sound.

NOTICE:

When discarding the shock absorber, see DISPOSAL on page SA–37.

SA0II–01

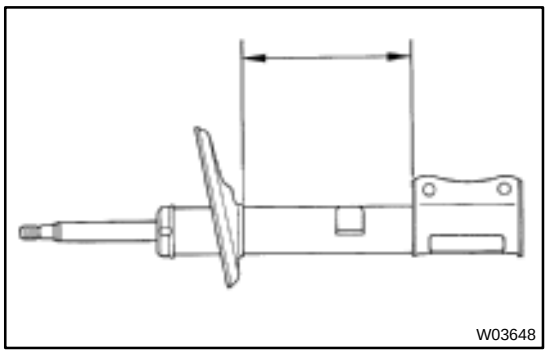

DISPOSAL

1. FULLY EXTEND SHOCK ABSORBER ROD

2. DRILL HOLE TO REMOVE GAS FROM CYLINDER

Using a drill, make a hole in the cylinder as shown in the illustration to remove the gas inside.

CAUTION:

The discharged gas is harmless, but be careful of chips which may fly up when drilling.

SA07R–01

REASSEMBLY

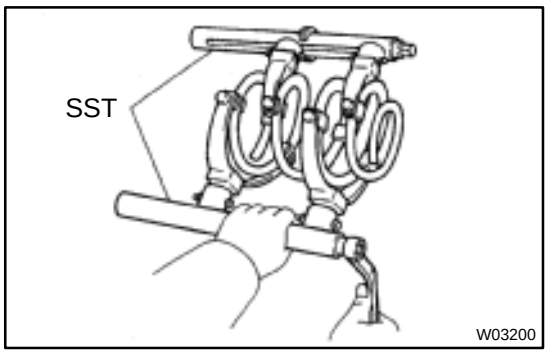

1. INSTALL LOWER INSULATOR ONTO SHOCK ABSORBER

2. INSTALL SPRING BUMPER TO PISTON ROD

3. INSTALL COIL SPRING

(a) Using SST, compress the coil spring.
SST 09727–30021

NOTICE:

Do not use an impact wrench. It will damage the SST.

HINT:

Use 2 of the same type of SST.

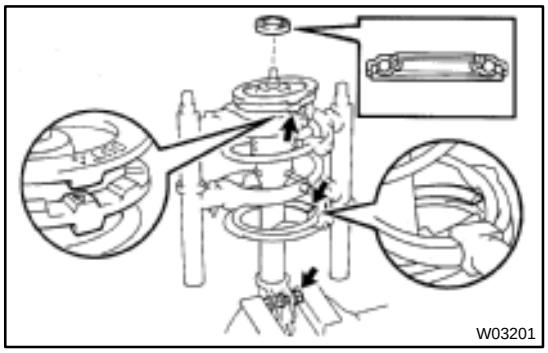

(b) Install the coil spring to the shock absorber.

HINT:

Fit the lower end of the coil spring into the gap of the spring lower seat.

4. INSTALL SPRING UPPER SEAT AND INSULATOR

(a) Align the 'OUT' mark of spring upper seat with the mark of the upper insulator.

(b) Install the spring upper seat with upper insulator to the shock absorber with the mark facing the outside of the vehicle.

(c) Install the bearing and suspension support.

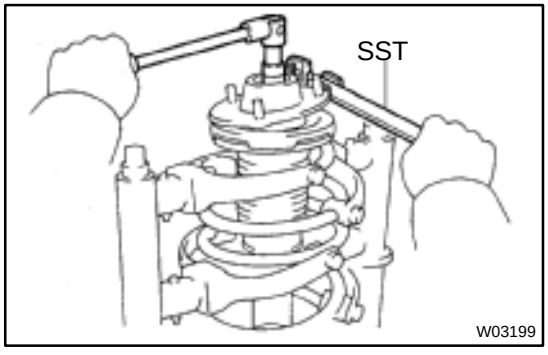

(d) Using SST to hold the suspension support, install a new nut.
SST 09729–22031
Torque: 49 N·m (500 kgf·cm, 36 ft·lbf)

(e) Remove the SST from the coil spring.
SST 09727–30021

NOTICE:

Check that the bearing fits into the recess in the suspension support.

SA07S–01

INSTALLATION

Installation is in the reverse order of removal (See page SA–34).
AFTER INSTALLATION, CHECK FRONT WHEEL ALIGNMENT (See page SA–4)

FRONT LOWER SUSPENSION ARM

SA07T–04

COMPONENTS

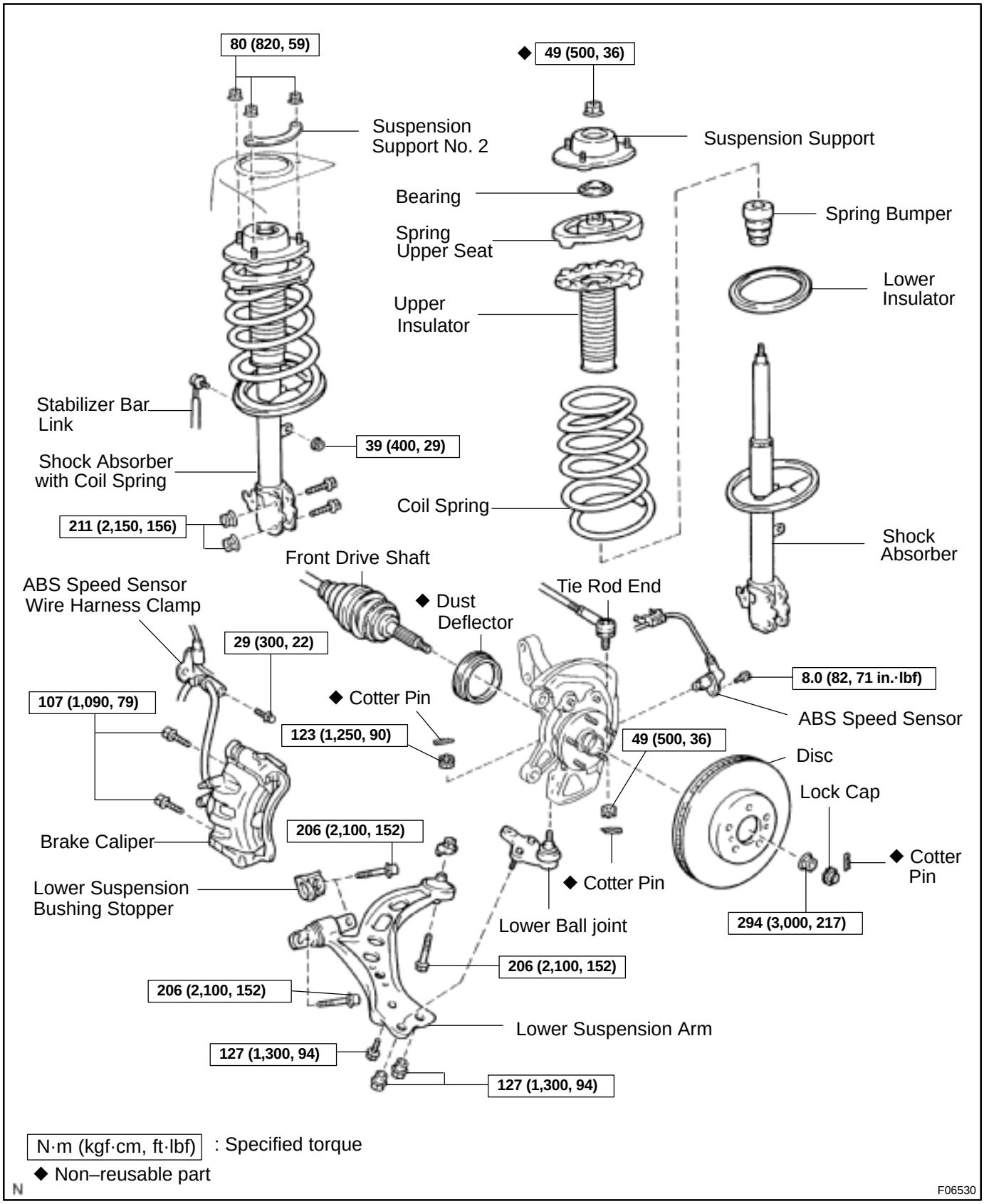

N·m (kgf·cm, ft·lbf) : Specified torque

◆ Non–reusable part

N

F06530

SA07U–01

REMOVAL

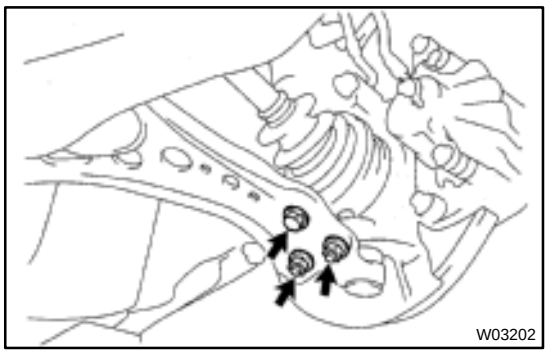

1. REMOVE FRONT WHEEL

Torque: 103 N·m (1,050 kgf·cm, 76 ft·lbf)

2. DISCONNECT LOWER SUSPENSION ARM FROM LOWER BALL JOINT

Remove the 2 nuts and bolt.

Torque: 127 N·m (1,300 kgf·cm, 94 ft·lbf)

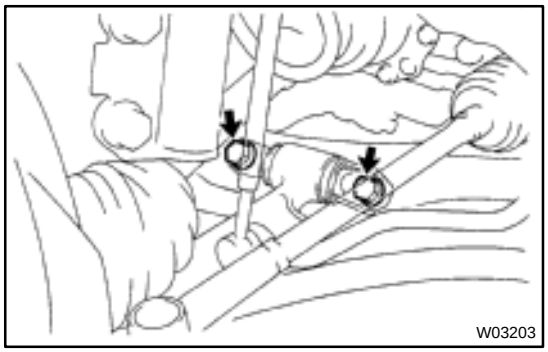

3. REMOVE LOWER SUSPENSION ARM

(a) Remove the 2 bolts on the front side of the lower suspension arm.

Torque: 206 N·m (2,100 kgf·cm, 152 ft·lbf)

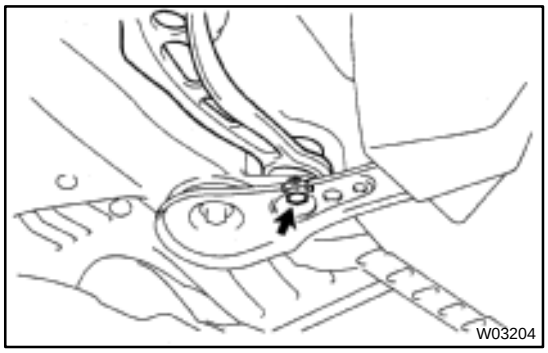

(b) Remove the bolt and nut on the rear side of the lower suspension arm.

Torque: 206 N·m (2,100 kgf·cm, 152 ft·lbf)

(c) Remove the lower suspension arm.

(d) Remove the lower suspension arm bushing stopper from the lower suspension arm shaft.

SA07W–01

INSTALLATION

Installation is in the reverse order of removal (See page SA–41).

AFTER INSTALLATION, CHECK FRONT WHEEL ALIGNMENT (See page SA–4)

FRONT LOWER BALL JOINT

SA07X–05

COMPONENTS

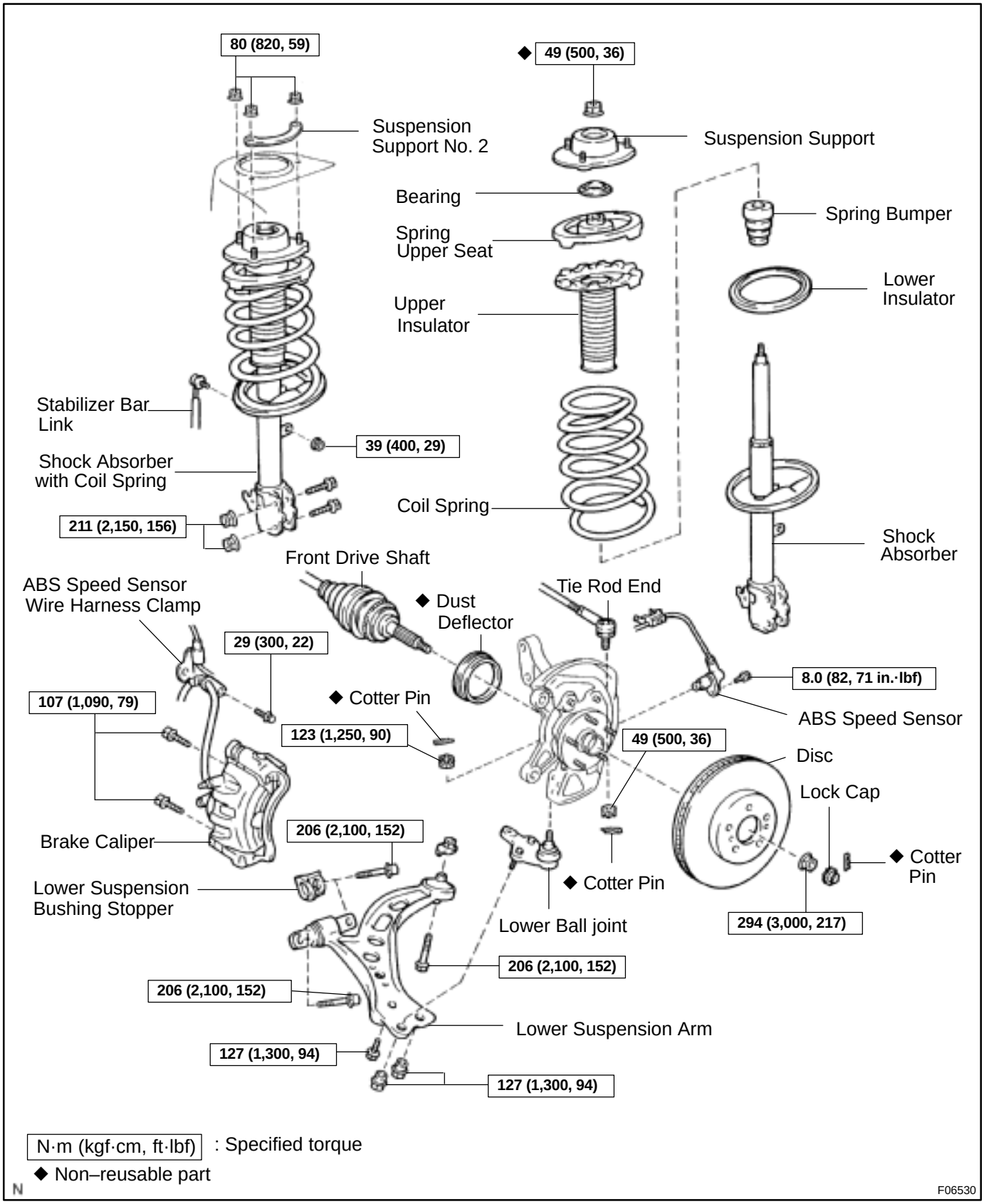

N·m (kgf·cm, ft·lbf) : Specified torque

◆ Non–reusable part

N

F06530

SA07Y–01

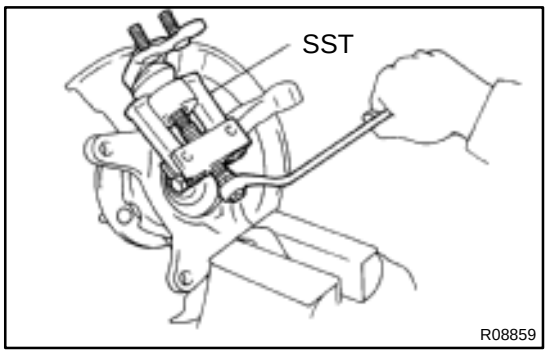

REMOVAL

1. REMOVE STEERING KNUCKLE WITH AXLE HUB
(See page SA–10)

2. REMOVE LOWER BALL JOINT

(a) Using a screwdriver, remove the dust deflector.

(b) Remove the cotter pin and nut.

(c) Using SST, remove the lower ball joint.
SST 09628–62011

SA07Z–01

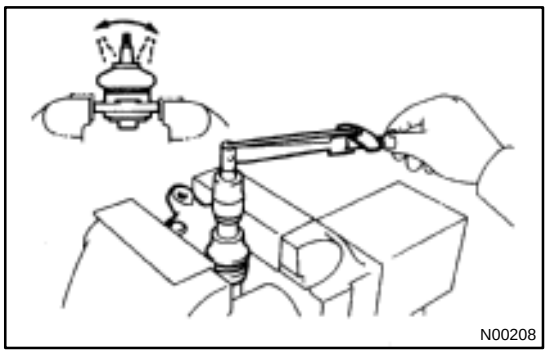

INSPECTION

INSPECT BALL JOINT FOR ROTATION CONDITION

(a) As shown in the illustration, flip the ball joint stud back and forth 5 times, before installing the nut.

(b) Using a torque wrench, turn the nut continuously one turn each 2 – 4 seconds and take the torque reading on the 5th turn.

Turning torque:
1.0 – 3.4 N·m (10 – 35 kgf·cm, 8.7 – 30 in.·lbf)

SA080–01

INSTALLATION

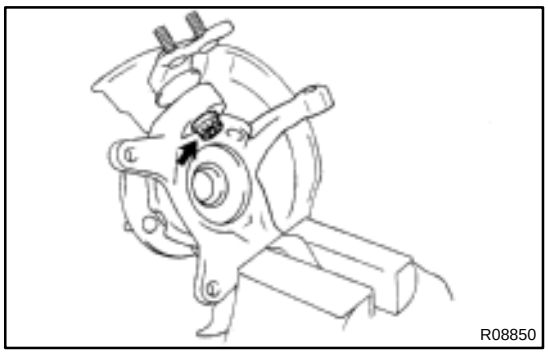

1. INSTALL LOWER BALL JOINT

(a) Install the lower ball joint and tighten the nut.
Torque:123 N·m (1,250 kgf·cm, 90 ft·lbf)

(b) Install a new cotter pin.

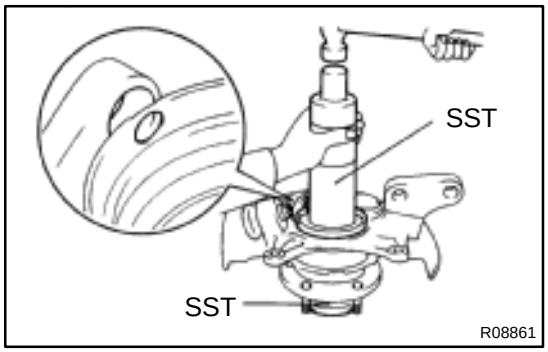

2. INSTALL NEW DUST DEFLECTOR

Using SST and a hammer, install a new dust deflector.

SST 09316–60011 (09316–00011, 09316–00041), 09608–32010

HINT:

Align the holes for the ABS speed sensor in the dust deflector and steering knuckle.

3. INSTALL STEERING KNUCKLE WITH AXLE HUB (See page SA–13)

4. CHECK ABS SPEED SENSOR SIGNAL (See page DI–493 or DI–539) AND FRONT WHEEL ALIGNMENT (See page SA–4)

FRONT STABILIZER BAR

COMPONENTS

SA081–01

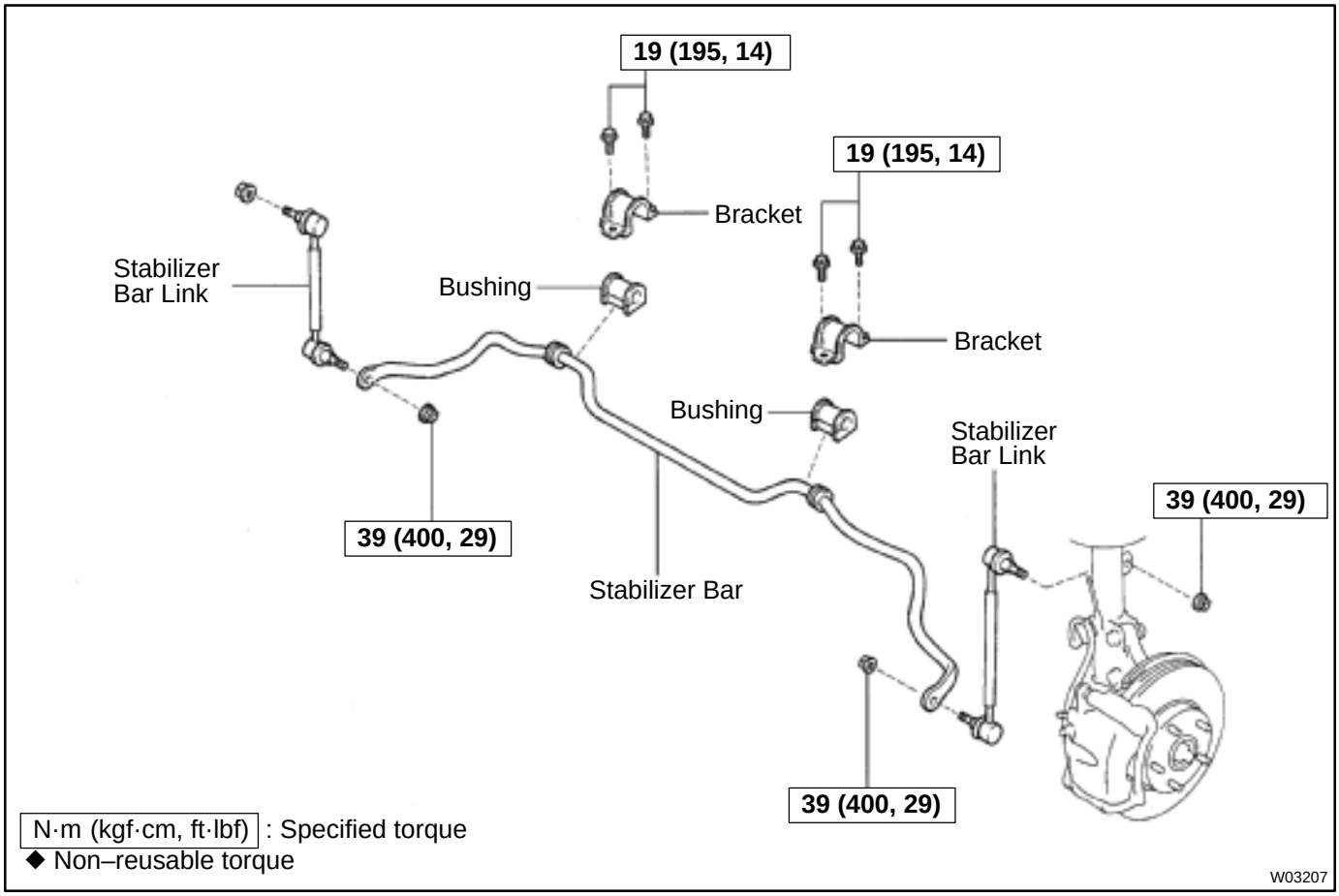

SA082–01

REMOVAL

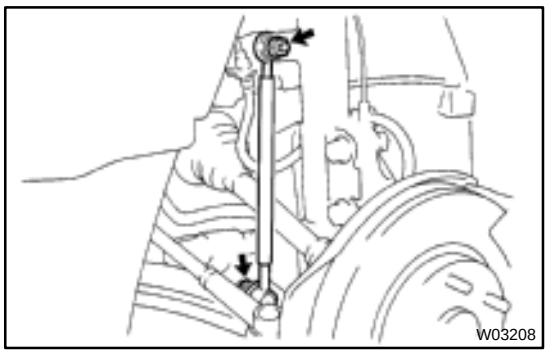

1. REMOVE LEFT AND RIGHT FRONT WHEELS

Torque: 103 N·m (1,050 kgf·cm, 76 ft·lbf)

2. REMOVE LEFT AND RIGHT STABILIZER BAR LINKS

Remove the 4 nuts and 2 links.

Torque: 39 N·m (400 kgf·cm, 29 ft·lbf)

HINT:

If the ball joint turns together with the nut, use a 5 mm hexagon wrench to hold the stud.

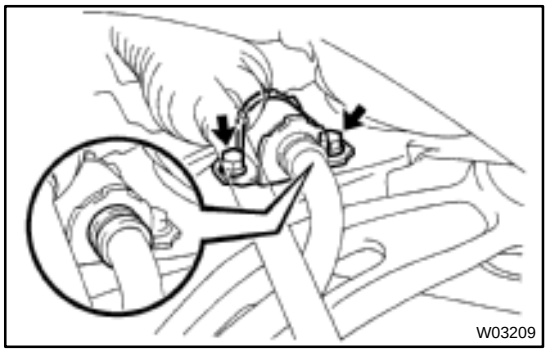

3. REMOVE LEFT AND RIGHT BRACKETS AND BUSHINGS

Remove the 4 bolts, 2 brackets and bushings.

Torque: 19 N·m (195 kgf·cm, 14 ft·lbf)

HINT:

At the time of installation, please refer to the following item.

Install the bushing to the inside of the bushing on the stabilizer bar.

4. REMOVE STABILIZER BAR

Remove the stabilizer bar from the left hand side.

NOTICE:

Be careful not to damage the pressure feed tube.

SA083–01

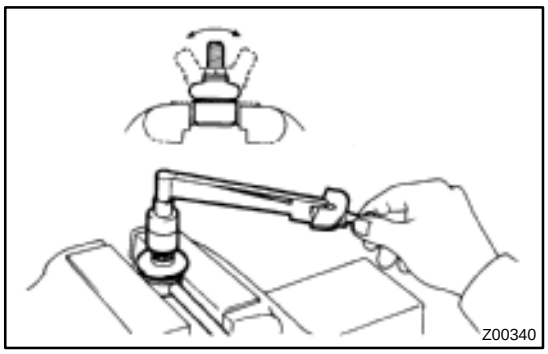

INSPECTION

INSPECT STABILIZER BAR LINK BALL JOINT FOR ROTATION CONDITION

(a) As shown in the illustration, flip the ball joint stud back and forth 5 times, before installing the nut.

(b) Using a torque wrench, turn the nut continuously one turn each 2 – 4 seconds and take the torque reading on the 5th turn.

Turning torque:
0.05 – 1.0 N·m (0.5 – 10 kgf·cm, 0.4 – 8.7 in.·lbf)

SA084–01

INSTALLATION

Installation is in the reverse order of removal (See page SA–48).

REAR AXLE HUB

COMPONENTS

SA085–01

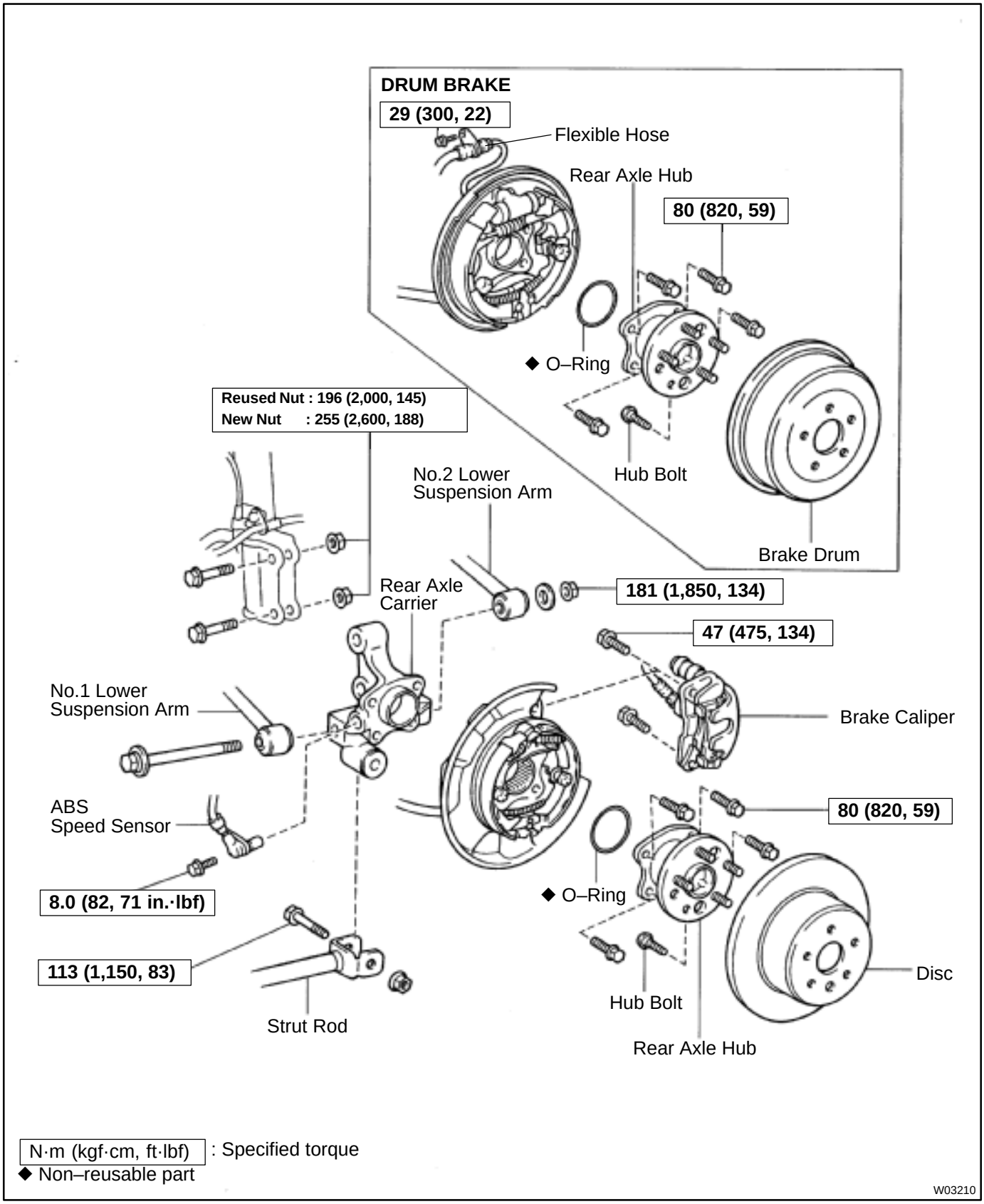

SA086–01

REMOVAL

1. REMOVE REAR WHEEL
Torque: 103 N·m (1,050 kgf·cm, 76 ft·lbf)

2. w/ DISC BRAKE:
REMOVE BRAKE CALIPER AND DISC

(a) Remove the brake caliper and disc.
Torque: 47 N·m (475 kgf·cm, 34 ft·lbf)

(b) Support the brake caliper securely.

3. w/ DRUM BRAKE:
REMOVE BRAKE DRUM

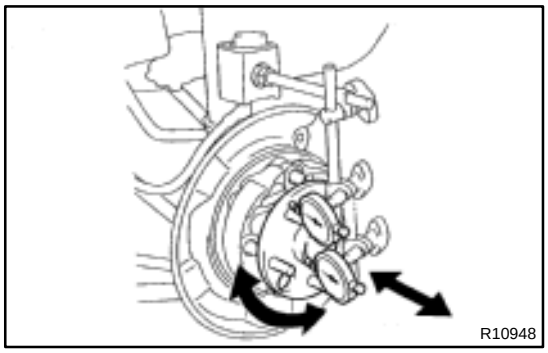
R10948

4. CHECK BEARING BACKLASH AND AXLE HUB DEVIATION

(a) Using a dial indicator near the center of the axle hub and check the backlash in the bearing shaft direction.
Maximum: 0.05 mm (0.0020 in.)

If the backlash exceeds the maximum, replace the axle hub with the bearing.

(b) Using a dial indicator, check the deviation at the surface of the axle hub outside the hub bolt.
Maximum: 0.07 mm (0.0028 in.)

If the deviation exceeds the maximum, replace the axle hub with the bearing.

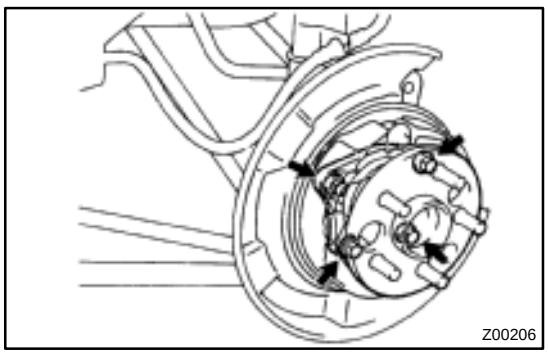
Z00206

5. REMOVE REAR AXLE HUB

(a) Remove the 4 bolts and rear axle hub.
Torque: 80 N·m (820 kgf·cm, 59 ft·lbf)

(b) Remove the O–ring.

HINT:
At the time of installation, coat a new O–ring with MP grease.

(c) w/ Drum brake:
Remove the bolt, and disconnect the flexible hose from the shock absorber.
Torque: 29 N·m (300 kgf·cm, 22 ft·lbf)

(d) Support the backing plate securely.

6. w/ ABS:
REMOVE ABS SPEED SENSOR
Torque: 8.0 N·m (82 kgf·cm, 71 in.·lbf)

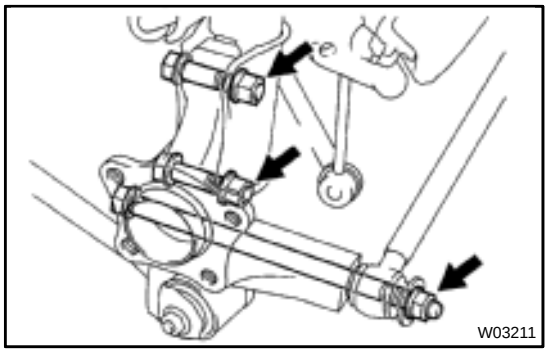
W03211

7. REMOVE REAR AXLE CARRIER

(a) Loosen the 3 nuts.
Torque:
Nut A:
Reused nut: 196 N·m (2,000 kgf·cm, 145 ft·lbf)
New nut: 255 N·m (2,600 kgf·cm, 188 ft·lbf)
Nut B: 181 N·m (1,850 kgf·cm, 134 ft·lbf)

HINT:
At the time of installation, please refer to the following items.
- If reusing the 2 nuts, coat the nut's threads with engine oil.
- After stabilizing the suspension, torque the nuts.

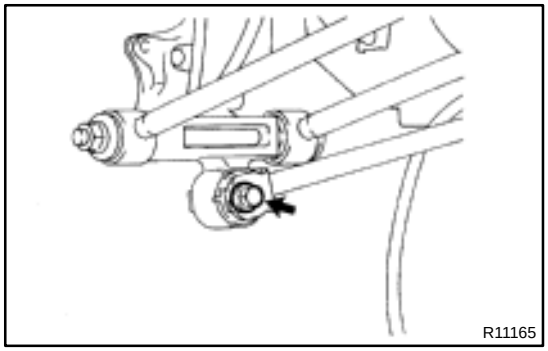
R11165

(b) Remove the bolt and nut, and disconnect the strut rod from the rear axle carrier.

NOTICE:
When removing/installing bolt, stop the nut from rotating and loosen/torque the bolt.
Torque: 113 N·m (1,150 kgf·cm, 83 ft·lbf)

(c) Remove the 2 nuts and bolts on the lower side of the shock absorber.

(d) Remove the nut, bolt and No.2 lower suspension arm.

(e) Remove the rear axle carrier.

SA087–01

INSTALLATION

Installation is in the reverse order of removal (See page SA–52).

AFTER INSTALLATION, CHECK ABS SPEED SENSOR SIGNAL (See page DI–493 or DI–539) AND REAR WHEEL ALIGNMENT (See page SA–7)

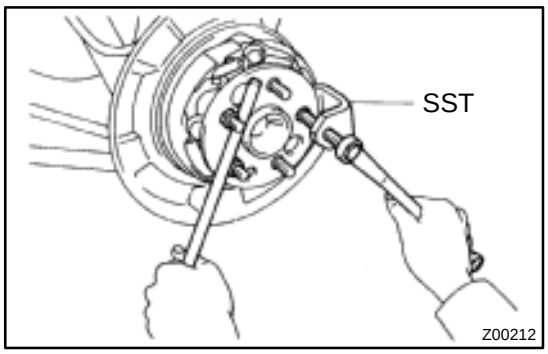

REAR WHEEL HUB BOLT

SA088–01

REPLACEMENT

1. REMOVE REAR WHEEL

2. REMOVE REAR DISC OR DRUM (See page SA–52)

3. REMOVE HUB BOLT

Using SST, remove the hub bolt.

SST 09628–10011

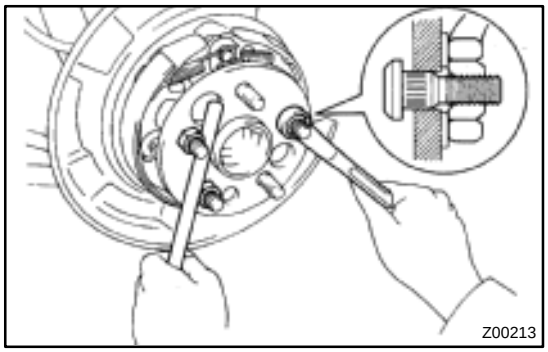

4. INSTALL HUB BOLT

Install a washer and nut to the hub bolt, as shown in the illustration, and install the hub bolt by tightening the nut.

5. INSTALL REAR DISC OR DRUM

6. INSTALL REAR WHEEL

Torque: 103 N·m (1,050 kgf·cm, 76 ft·lbf)

REAR SHOCK ABSORBER

SA089–01

COMPONENTS

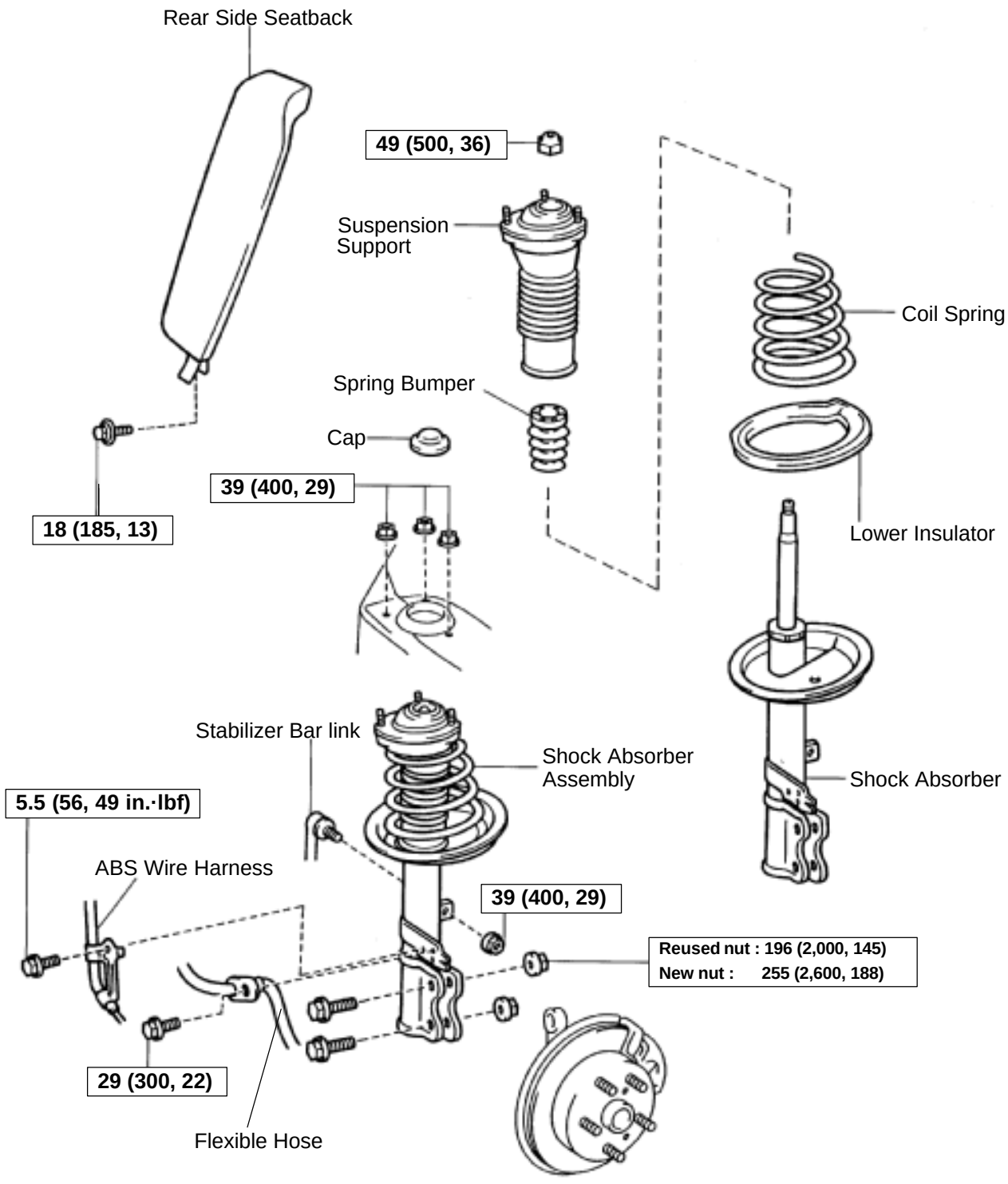

N·m (kgf·cm, ft·lbf) : Specified torque

◆ Non–reusable part

W03212

SA08A–01

REMOVAL

1. REMOVE REAR SIDE SEATBACK
(See page BO–113 or BO–118)

2. REMOVE REAR WHEEL
Torque: 103 N·m (1,050 kgf·cm, 76 ft·lbf)

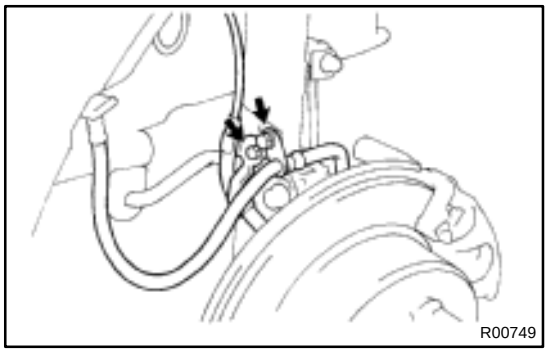
R00749

3. REMOVE FLEXIBLE HOSE AND ABS SPEED SENSOR WIRE HARNESS (w/ ABS) FROM SHOCK ABSORBER

Remove the 2 bolts, flexible hose bracket and ABS wire harness clamp.

Torque:
Flexible hose: 29 N·m (300 kgf·cm, 22 ft·lbf)
ABS wire: 5.5 N·m (56 kgf·cm, 49 in.·lbf)

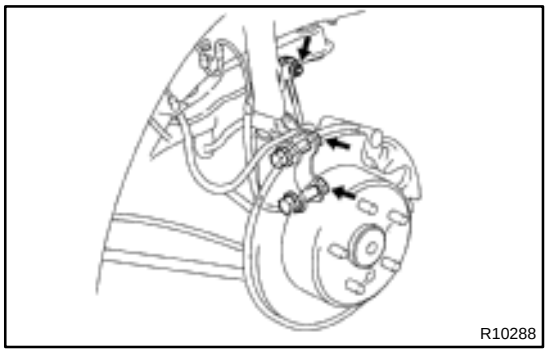
R10288

4. DISCONNECT STABILIZER BAR LINK FROM SHOCK ABSORBER (See page SA–70)

5. REMOVE SHOCK ABSORBER WITH COIL SPRING

(a) Loosen the 2 nuts on the lower side of the shock absorber.

Torque:
Reused nut: 196 N·m (2,000 kgf·cm, 145 ft·lbf)
New nut: 255 N·m (2,600 kgf·cm, 188 ft·lbf)

HINT:
At the time of installation, coat the nut's threads with engine oil.

(b) Support the rear axle carrier with a jack.

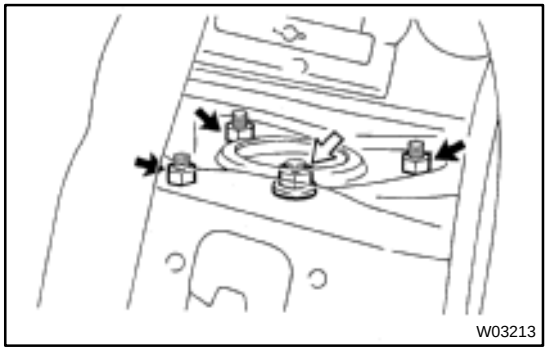
W03213

(c) Remove the cap.

(d) Loosen the nut in the middle of the suspension support.

NOTICE:
Do not remove it.

Torque: 49 N·m (500 kgf·cm, 36 ft·lbf)

(e) Remove the 3 nuts of the suspension support.

Torque: 39 N·m (400 kgf·cm, 29 ft·lbf)

(f) Lower the rear axle carrier and remove the 2 bolts.

(g) Remove the shock absorber with the coil spring.

SA08B–01

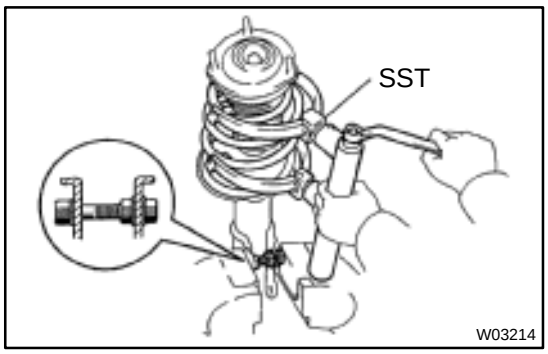

DISASSEMBLY

REMOVE COIL SPRING

(a) Install 2 nuts and a bolt to the bracket at the lower part of the shock absorber and secure it in a vise.

(b) Using SST, compress the coil spring.

NOTICE:

Do not use an impact wrench. It will damage the SST.

SST 09727–30021

(c) Remove the suspension support nut.

(d) Remove these parts from the shock absorber:

- Suspension support
- Coil spring
- Lower insulator
- Spring bumper

SA08C–01

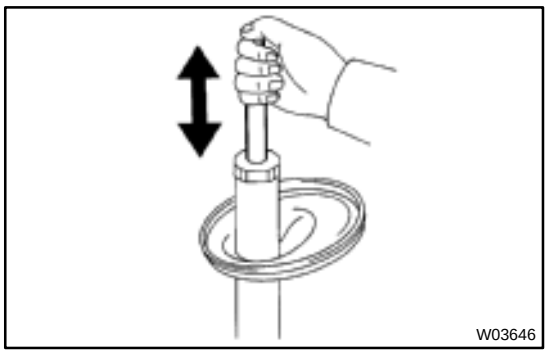

INSPECTION

INSPECT SHOCK ABSORBER

Compress and extend the shock absorber rod and check that there is no abnormal resistance or unusual operation sound.

NOTICE:

When discarding the shock absorber, see DISPOSAL on page SA–60.

SA0IJ–01

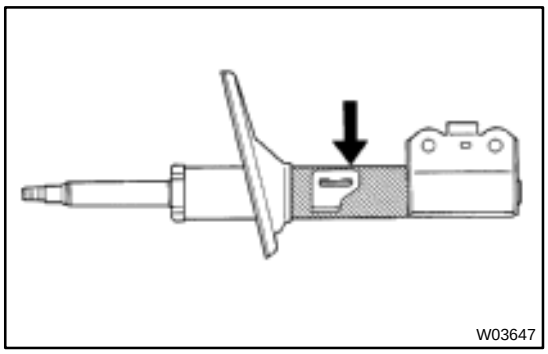

DISPOSAL

1. FULLY EXTEND SHOCK ABSORBER ROD

2. DRILL HOLE TO REMOVE GAS FROM CYLINDER

Using a drill, make a hole in the cylinder as shown in the illustration to remove the gas inside.

CAUTION:

The discharged gas is harmless, but be careful of chips which may fly up when drilling.

SA08E–01

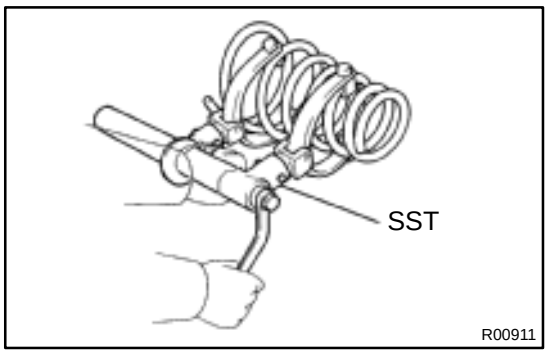

REASSEMBLY

1. INSTALL LOWER INSULATOR

2. INSTALL SPRING BUMPER TO PISTON ROD

3. INSTALL COIL SPRING

(a) Using SST, compress the coil spring.
SST 09727–30021

NOTICE:

Do not use an impact wrench. It will damage the SST.

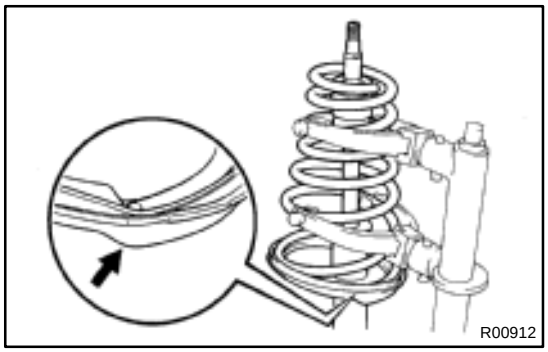

(b) Install the coil spring to the shock absorber.

HINT:

Fit the lower end of the coil spring into the gap of the spring lower seat.

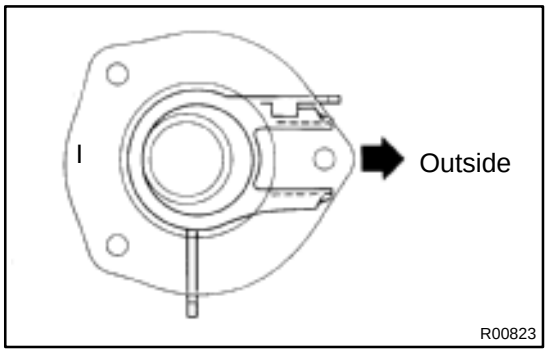

4. INSTALL SUSPENSION SUPPORT

(a) Install the suspension support to the piston rod and temporarily tighten a new nut.

(b) Rotate the suspension support and set it in the direction shown in the illustration.

(c) Remove the SST.
SST 09727–30021

HINT:

After removing SST, again check the direction of the suspension support.

SA08F–01

INSTALLATION

Installation is in the reverse order of removal (See page SA–57).
AFTER INSTALLATION, CHECK REAR WHEEL ALIGNMENT (See page SA–7)

REAR LOWER SUSPENSION ARM AND STRUT ROD

SA08G–01

COMPONENTS

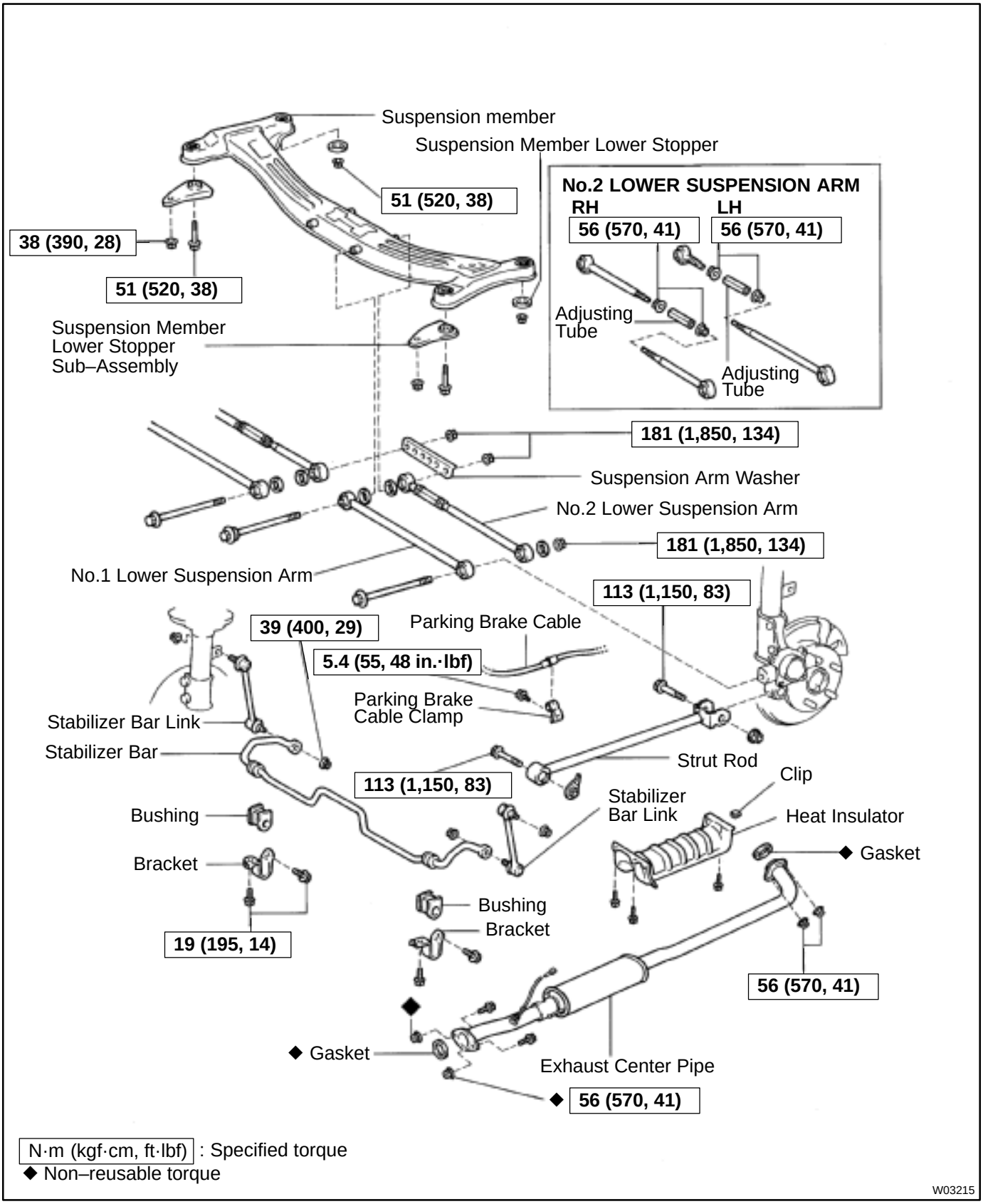

N·m (kgf·cm, ft·lbf) : Specified torque
◆ Non–reusable torque

W03215

SA08H–01

REMOVAL

1. REMOVE REAR WHEEL
Torque: 103 N·m (1,050 kgf·cm, 76 ft·lbf)

2. REMOVE EXHAUST CENTER PIPE
5S–FE Engine: (See page EM–114)
1MZ–FE Engine: (See page EM–111)

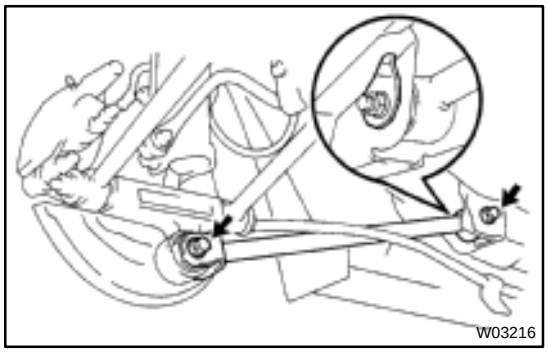

3. REMOVE STRUT ROD

(a) Remove the bolt and disconnect the parking brake cable.
Torque: 5.4 N·m (55 kgf·cm, 48 in.·lbf)

(b) Remove the 2 bolts and nuts.
Torque: 113 N·m (1,150 kgf·cm, 83 ft·lbf)

HINT:
At the time of installtion,after stabilizing the suspension, torque the bolts.

(c) Remove the strut rod.

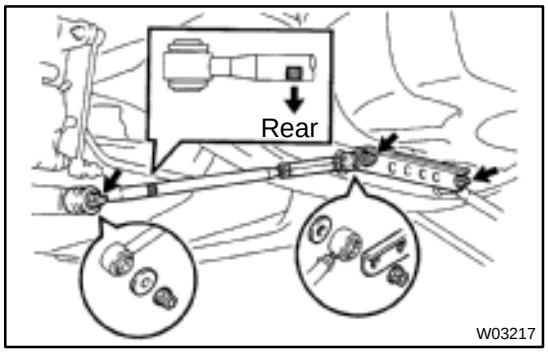

4. REMOVE NO.2 LOWER SUSPENSION ARM

(a) Remove the 3 nuts, suspension arm washer and washers.
Torque: 181 N·m (1,850 kgf·cm, 134 ft·lbf)

HINT:
At the time of installtion, after stabilizing the suspension, torque the nuts.

(b) Remove the No.2 lower suspension arm.

HINT:
At the time of installtion, face the paint mark to the rearward.

5. REMOVE LEFT AND RIGHT STABILIZER BRACKETS
(See page SA–70)

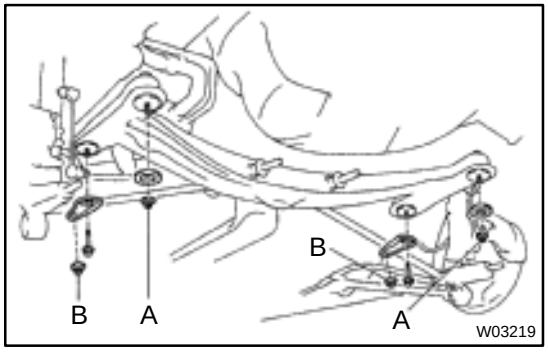

6. REMOVE NO.1 LOWER SUSPENSION ARM

(a) Support the suspension member with a jack.

(b) Remove the 4 nuts, 2 bolts and suspension member lower stoppers.
Torque:
Bolt: 51 N·m (520 kgf·cm, 38 ft·lbf)
Nut A: 51 N·m (520 kgf·cm, 38 ft·lbf)
Nut B: 38 N·m (390 kgf·cm, 28 ft·lbf)

(c) Lower the suspension member.

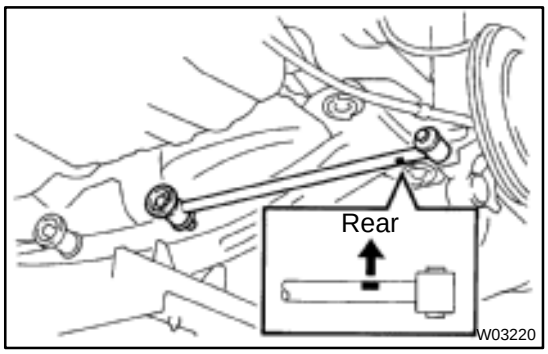

(d) Remove the No.1 lower suspension arm with the 2 bolts and washer.

HINT:

At the time of installtion, face the paint mark to the rearward.

SA08I–01

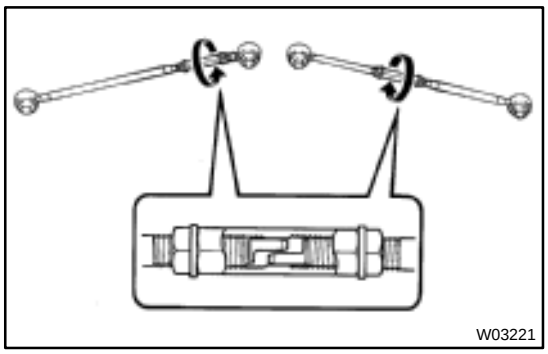
W03221

DISASSEMBLY

DISASSEMBLE NO.2 LOWER SUSPENSION ARM

(a) Loosen the 2 lock nuts.
(b) Turn and disassemble the No.2 lower suspension arm.
(c) Remove the lock nuts from the No.2 lower suspension arm.

SA08J–01

REASSEMBLY

ASSEMBLE NO.2 LOWER SUSPENSION ARM

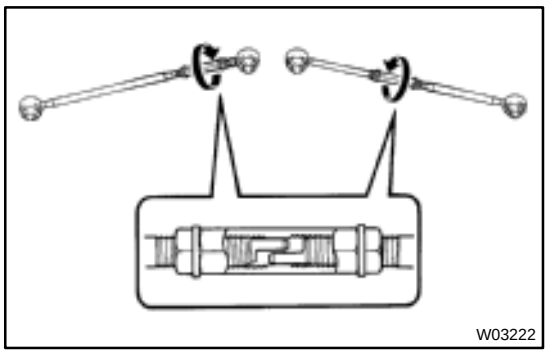

(a) Install the 2 lock nuts to the No.2 lower suspension arm.
(b) Turn the adjusting tube and assemble the No.2 lower suspension arm.

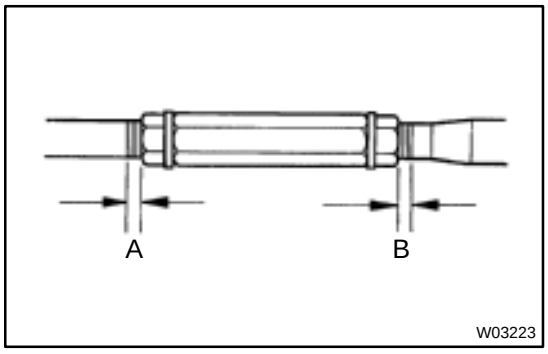

HINT:
When assembling the No.2 lower suspension arm, make sure that the length of A and B shown in the illustration is the same.

Maximum difference: 3.0 mm (0.118 in.)

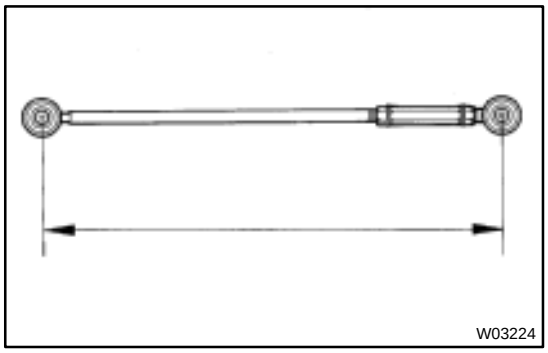

(c) Adjust the No.2 lower suspension arm length by turning the adjusting tube.

Arm length: 512.3 mm (20.169 in.)

(d) Temporarily tighten the 2 lock nuts.

HINT:
After adjusting the rear wheel alignment, torque the lock nuts (See page SA–7).

Torque: 56 N·m (570 kgf·cm, 41 ft·lbf)

SA08K–01

INSTALLATION

Installation is in the reverse order of removal (See page SA–64).

AFTER INSTALLATION, CHECK REAR WHEEL ALIGNMENT (See page SA–7)

REAR STABILIZER BAR

SA08L–01

COMPONENTS

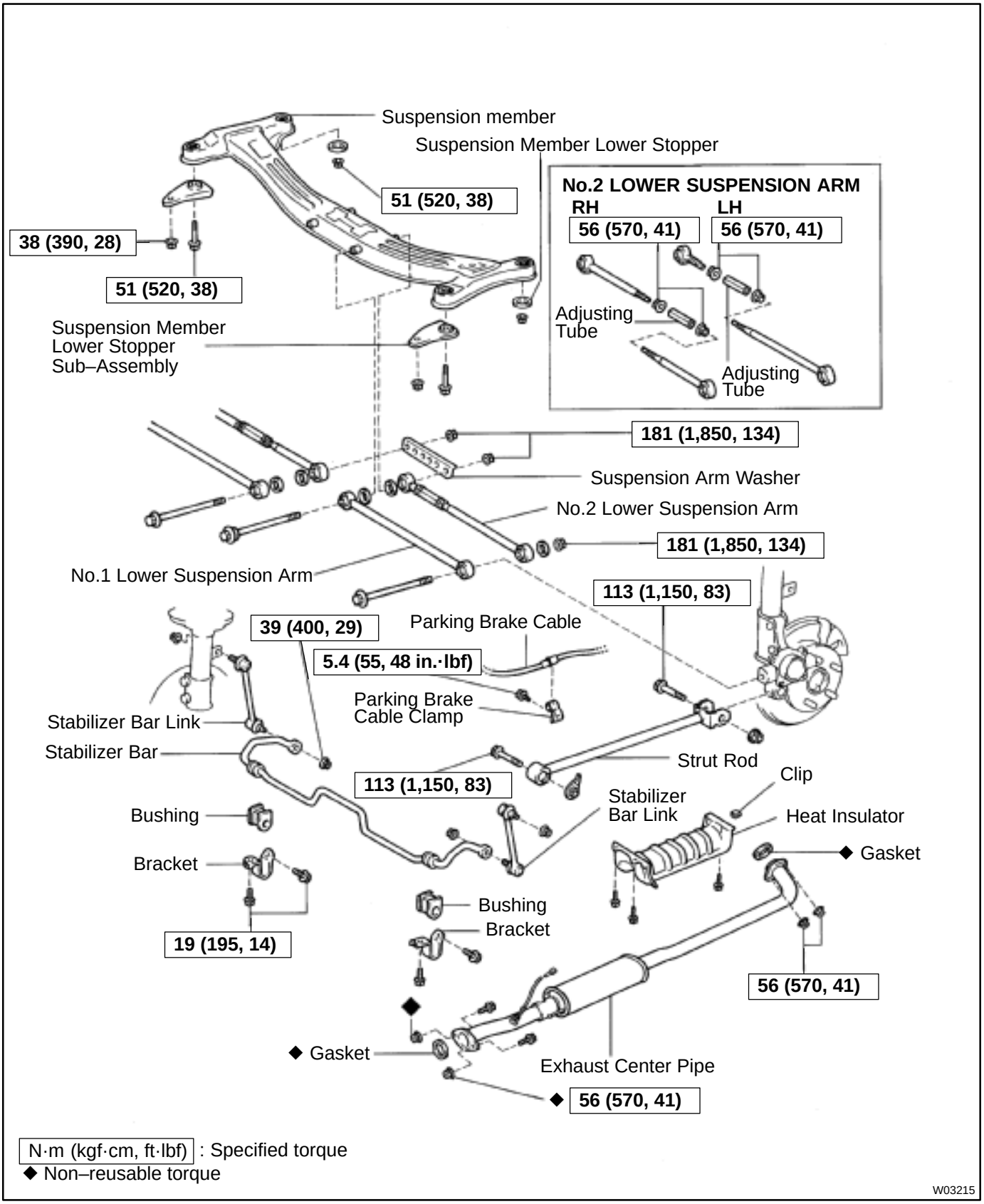

N·m (kgf·cm, ft·lbf) : Specified torque
◆ Non–reusable torque

W03215

SA08M–01

REMOVAL

1. REMOVE REAR WHEELS

Torque: 103 N·m (1,050 kgf·cm, 76 ft·lbf)

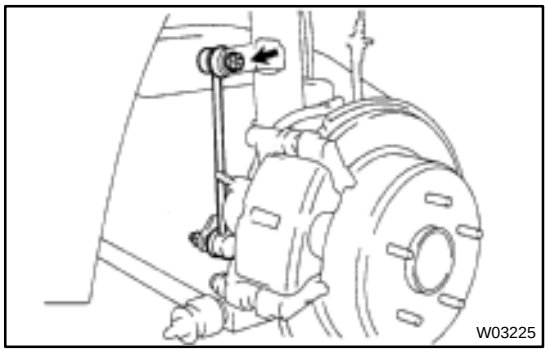

2. REMOVE LEFT AND RIGHT STABILIZER BAR LINKS

Remove the 4 nuts and 2 links.

HINT:

If the ball joint turns together with the nut, use a 5 mm hexagon wrench to hold the stud.

Torque: 39 N·m (400 kgf·cm, 29 ft·lbf)

3. REMOVE HEAT INSULATOR

Remove the 3 bolts, clip and heat insulator.

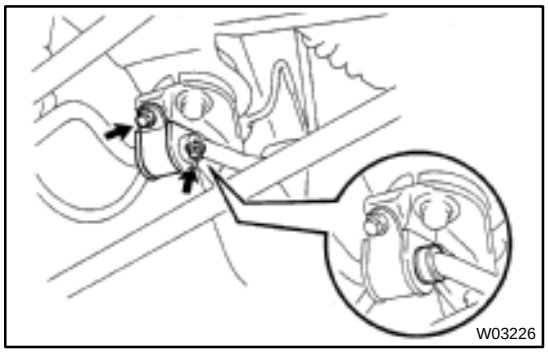

4. REMOVE LEFT AND RIGHT BRACKETS AND BUSHINGS

Remove the 4 bolts, 2 brackets and bushings.

Torque: 19 N·m (195 kgf·cm, 14 ft·lbf)

HINT:

At the time of installation, install the bushing to the portion outside the bushing on the stabilizer bar.

5. REMOVE STABILIZER BAR

SA08N–01

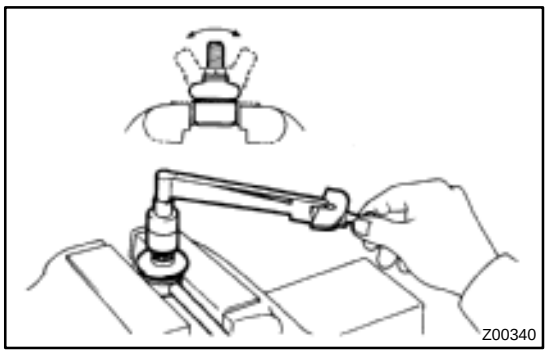

INSPECTION

INSPECT STABILIZER BAR LINK BALL JOINT FOR ROTATION CONDITION

(a) As shown in the illustration, flip the ball joint stud back and forth 5 times, before installing the nut.

(b) Using a torque wrench, turn the nut continuously one turn each 2 – 4 seconds and take the torque reading on the 5th turn.

Turning torque:
0.05 – 1.0 N·m (0.5 – 10 kgf·cm, 0.4 – 8.7 in.·lbf)

SA08O–01

INSTALLATION

Installation is in the reverse order of removal (See page SA–70).

SR06I–05

REMOVAL

1. REMOVE STEERING WHEEL PAD

NOTICE:

If the airbag connector is disconnected with the ignition switch at ON or ACC, DTCs will be recorded.

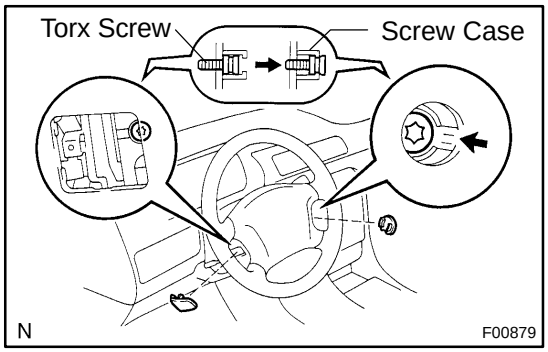

(a) Place the front wheels facing straight ahead.
(b) Remove the 2 steering wheel lower No.2 and No.3 covers.
(c) Using a torx socket wrench, loosen the 2 torx screws.

HINT:

Loosen the 2 screws until the groove along the screw circumference catches on the screw case.

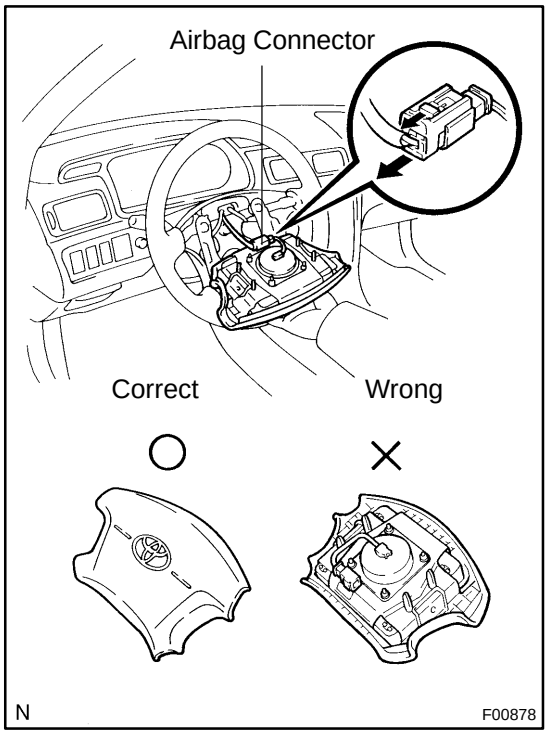

(d) Pull the pad out from the steering wheel and disconnect the airbag connector.

CAUTION:

- **When storing the wheel pad, keep the upper surface of the pad facing upward.**
- **Never disassemble the wheel pad.**

NOTICE:

When removing the wheel pad, take care not to pull the airbag wire harness.

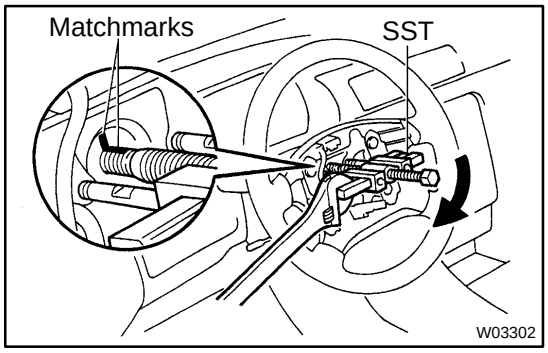

2. REMOVE STEERING WHEEL

(a) Disconnect the connector.
(b) Remove the steering wheel set nut.
(c) Place matchmarks on the steering wheel and main shaft assembly.
(d) Using SST, remove the wheel.

SST 09950–50012 (09951–05010, 09952–05010, 09953–05020, 09954–05020)

3. REMOVE UPPER AND LOWER COLUMN COVERS

(a) Remove the lower No.2 cover from the lower cover.

(b) Remove the 3 screws, upper and lower column covers.

4. REMOVE FRONT DOOR INSIDE SCUFF PLATE

5. REMOVE COWL SIDE TRIM

Remove the clip and cowl side trim.

6. REMOVE No.1 LOWER INSTRUMENT PANEL

(a) Remove the 2 screws.

(b) Disconnect the hood lock control cable.

(c) Remove the No.1 lower instrument panel.

7. REMOVE LH LOWER INSTRUMENT PANEL

Remove the 4 bolts and LH lower instrument panel.

8. REMOVE LOWER INSTRUMENT FINISH PANEL

9. REMOVE COMBINATION SWITCH WITH SPIRAL CABLE

(a) Disconnect the 3 connectors.

(b) Disconnect the airbag connector.

(c) Remove the 3 screws and combination switch with spiral cable.

10. REMOVE SPIRAL CABLE (See page BE–23)

NOTICE:

Do not disassemble the cable or apply oil to it.

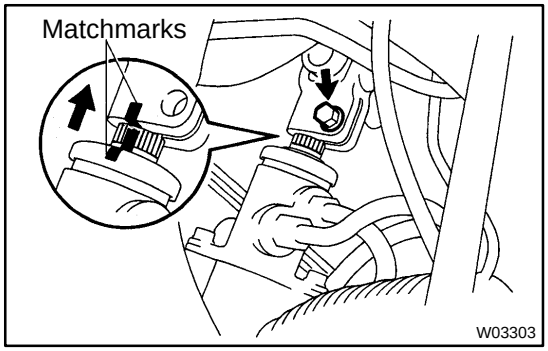

11. DISCONNECT INTERMEDIATE SHAFT ASSEMBLY

(a) Place matchmarks on the intermediate shaft and control valve shaft.

(b) Remove the bolt and disconnect the intermediate shaft assembly.

12. REMOVE INTERMEDIATE SHAFT ASSEMBLY

Remove the bolt and intermediate shaft assembly.

13. REMOVE STEERING COLUMN ASSEMBLY

(a) Disconnect the connectors.

(b) Remove the 4 column assembly set nuts and steering column assembly.